United States Department of the Interior

BUREAU OF RECLAMATION
Pacific Northwest Region
1150 North Curtis Road, Suite 100
Boise, Idaho 83706-1234

TAKE PRIDE® IN AMERICA

IN REPLY REFER TO:

PN-3425
PRJ-14.00

JUN 15 2007

MEMORANDUM

To: ESA/Planning Manager, Snake River Area Office-West
Attn: SRA-1200 (Lesa Stark)
Subbasin Liaison, Salmon Field Office, Snake River Area-West
Attn: SRA-1204 [John (Al) Simpson]

From: Dennis L. Hawkins
Pacific Northwest (PN) Regional Underwater Inspection Team Leader/Civil Engineer

Subject: S11-12 Canal Consolidation, Diversion Berm Underwater Inspection, April 13, 2007, Upper Salmon River Water Optimization Project, Idaho

General

A special examination of the S11-12 Diversion Berm on the Salmon River was conducted by PN Regional Underwater Inspection Team members on April 13, 2007.

The inspection was requested by fisheries biologist Al Simpson (SRA-1204), Salmon Field Office, Salmon, Idaho. Site specific access assistance, access to as-built drawings, and examination requirements were coordinated with Mr. Simpson.

Bureau of Reclamation personnel participating in the examination were divers Brian Hamilton (SRA-1207), Rob McAffee (PN-3611), and Dennis Hawkins (PN-3425), who served as coordinator and author of this report. Messrs. McAffee and Hawkins were from the PN Regional Office, Boise, Idaho, and Mr. Hamilton was from the Salmon Field Office, Salmon, Idaho. Topside assistance was provided by Mr. Simpson.

The weather was in the mid-50° F range with sunny skies and no wind present.

Background

The S11-12 Diversion is located on the Salmon River, approximately one-half mile south of Salmon, Idaho. The diversion consists of an approximately 800-foot diversion berm that directs flow into a combined headgate and overshot sluice gate for S-11 and S -12 diversions. At the beginning of the diversion berm is a boulder wing wall that directs flow into the diversion canal. This wing wall is constructed at a fairly sharp angle to river flow and produces turbulence at the

beginning of the diversion berm. The diversion berm was constructed in 2001 and 2002. The diversion berm has a 5-foot-tall by 3-foot-wide bottom "T-plate" with placed river boulders, cobbles, and gravels on both sides to form an impervious berm. The diversion berm is constructed on river bank right looking downstream. Refer to Figure 1, *S11-12 Canal Consolidation, General Plan*, and Photograph Nos. 1 through 3, all attached. Access to the diversion berm was via a diversion canal bank, across the flow of the S11-12 irrigation canal to the diversion berm. Flows in the Salmon River were approximately 1,900 cubic feet per second (ft^3/s) with S11-12 diversion flows at approximately 80 ft^3/s.

Attached Drawing Nos. 1720-100-38, *S11-12 Canal Consolidation, Site Plan and Diversion Berm Sections*, and 1720-100-54, *S11-12 Canal Consolidation, General Plan*, were referenced for this examination.

Prior to entering the canal the overshot sluice gate was partially closed to reduce flows in the S11-12 canal.

Since the construction of the diversion berm, high flows from previous years have moved the backfill material away from the "T-plate" exposing it to possible undermining, which could cause structural failure.

Examination Results

Diversion Berm

The upstream end of the diversion berm was accessed by divers swimming across the diversion canal and wading upstream to the beginning of the diversion berm (Station 0+00). Divers then waded downstream along the "T-plate" stopping every several feet to measure the distance from the top of the "T-plate" down to the top of existing riprap. Refer to Photograph Nos. 4 through 6, attached. The stationing and "T-plate" exposure of both inside (canal side) and outside (Salmon River side) were recorded from the bank by a third diver. The data is documented on Figure 1.

During the inspection neither undercutting nor tilting of the T-plate was noted and maximum amount of exposure of the 5-foot high T-plate was approximately 4 feet leaving approximately 1-foot of the T-plate and footer still buried. This exposure was noted at the first 10 feet starting at Station 0+00. All placed angular cobbles and boulders were well bedded with no undermining of the T-plate footer. Exposure of the T-plate varied from 4 to 0 feet with the furthest T-plate length (Stations 7+44 to 7+88) being buried (0 feet exposure of T-plate). Refer to Figure 1.

On the canal side of the diversion berm, approximately 260 cubic yards (yd^3) of material were placed to the top of the T-plate (elevation 4033.6). From depth of exposure of the T-plate, the amount of material that had been removed was approximately 84 yd^3 or approximately 32 percent of the original material. This material appeared to have been lifted up and over the T-plate and deposited on the river side or had been pushed downstream along the canal bank towards the headgates.

On the river side of the diversion berm, approximately 560 yd^3 of material were placed to the top of the T-plate (elevation 4033.6). From depth of exposure of the T-plate, the amount of material that had been removed was approximately 73 yd^3 or approximately 13 percent of the original material. This material was transported downstream by high flows of the river.

It was noted the just upstream of the diversion berm intake, the river bank right was sloughing off and providing rounded river gravels and cobbles for additional bedloading into the diversion canal.

Conclusions and Recommendations

The T-plate and berm appeared to be stable with no undermining or tilting of the T-plate. The remaining rock was well bedded and appeared to be keyed in to prevent further moving. It was noted that the rock wing wall at the beginning of the diversion berm has a very sharp angle to river flows that is producing turbulent flow at the beginning of the berm. This is contributing to the removal of material from the first 10 feet of berm. It is recommended that this rock wing wall be moved further upstream and swung in toward the right bank to provide for a more gradual flow regime into the diversion canal. At the same time, additional angular rock (18- to 24-inch) could be placed on both canal and river sides for the first 10 feet of the T-plate to replace the missing rock fill that has been washed away. Refer to Figure 2, *S11-12 Canal Consolidation, Rock Wing Wall.*

Also, just upstream of the diversion berm on river bank right, the existing bank should be resloped and 18- to 24-inch angular riprap placed to help reduce sloughing in of the bank and to prevent additional bedloading from entering the diversion canal. Refer to Figure 2.

The existing diversion berm and T-plate appear to be stable but should be inspected again after any high flows in the river to ensure that no undercutting of the T-plate footing is occurring and to ensure current rock placement has not been washed away.

Attachments - Figures 1 and 2
Photograph Nos. 1 through 6
Drawing Nos. 1720-100-38 and -54

cc: PN-3020 (Jarsky) (w/o att), PN-3425 (Hawkins) (w/att)

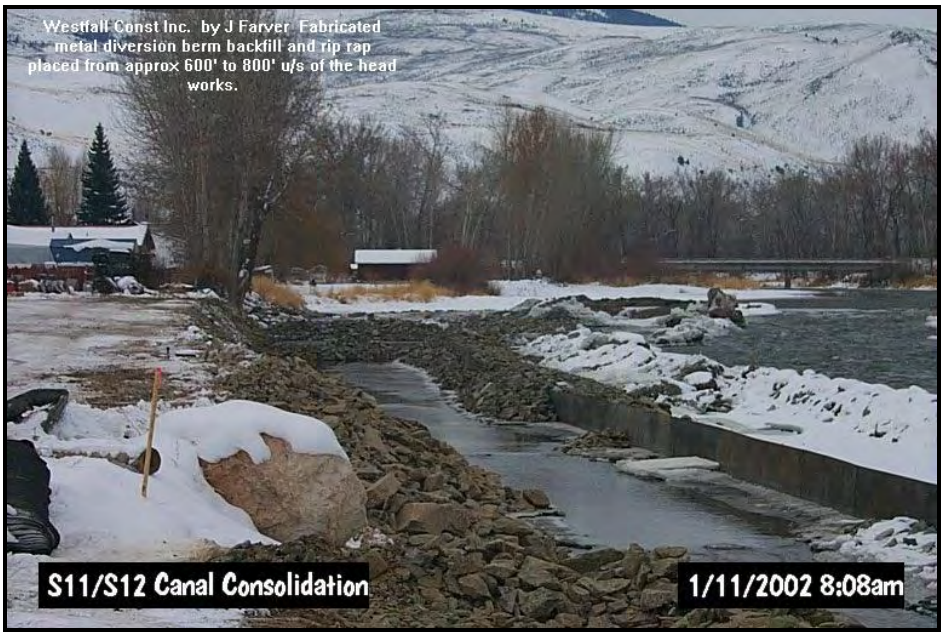

Photograph No. 1. View looking upstream during construction of the with S11-12 diversion berm. Note the exposed "T-plate" and the cobble backfill around the "T-plate." Salmon River is in far right of photograph. **PN Regional Underwater Inspection Team – S11-12 Diversion Berm , Upper Salmon River Water Optimization Project, Idaho.**

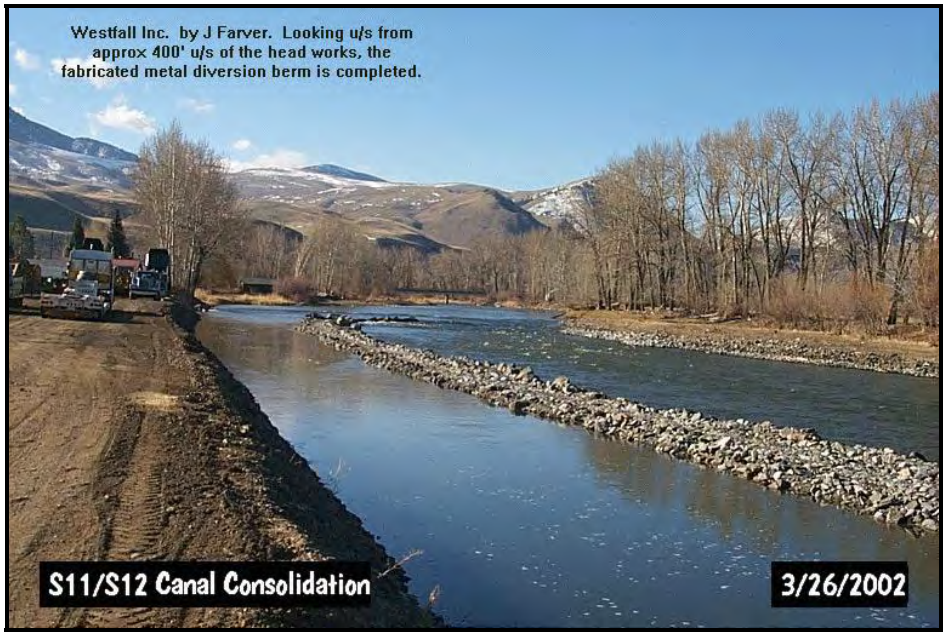

Photograph No. 2. View looking upstream after construction was completed. S11-12 irrigation canal and Salmon River are divided by the diversion berm, headgates, and Salmon River. **PN Regional Underwater Inspection Team – S11-12 Diversion Berm, Upper Salmon River Water Optimization Project, Idaho.**

Photograph No. 3. View looking downstream with S11-12 diversion berm, headgates, and Salmon River. Diversion berm extends approximately 800 feet upstream from headgate. **PN Regional Underwater Inspection Team – S11-12 Diversion Berm, Upper Salmon River Water Optimization Project, Idaho.**

Photograph No. 4. View looking at boulder wing wall and beginning of diversion berm. Note backfill material missing downstream from wing wall. T-plate exposure was approximately 4 feet in this area. **PN Regional Underwater Inspection Team – S11-12 Diversion Berm, Upper Salmon River Water Optimization Project, Idaho.**

Photograph No. 5. View of divers measuring "T-plate" exposure at end of boulder wing wall. Material missing was approximately 4 feet, leaving approximately 12 inches of embedment. **PN Regional Underwater Inspection Team – S11-12 Diversion Berm, Upper Salmon River Water Optimization Project, Idaho.**

Photograph No. 6. View of diver measuring "T-plate" exposure at approximate Station 4+00 (midway of diversion berm). Note amount of material present. Exposure of "T-plate" was approximately 6 inches at this location. **PN Regional Underwater Inspection Team – S11-12 Diversion Berm, Upper Salmon River Water Optimization Project, Idaho.**

FIGURE 1

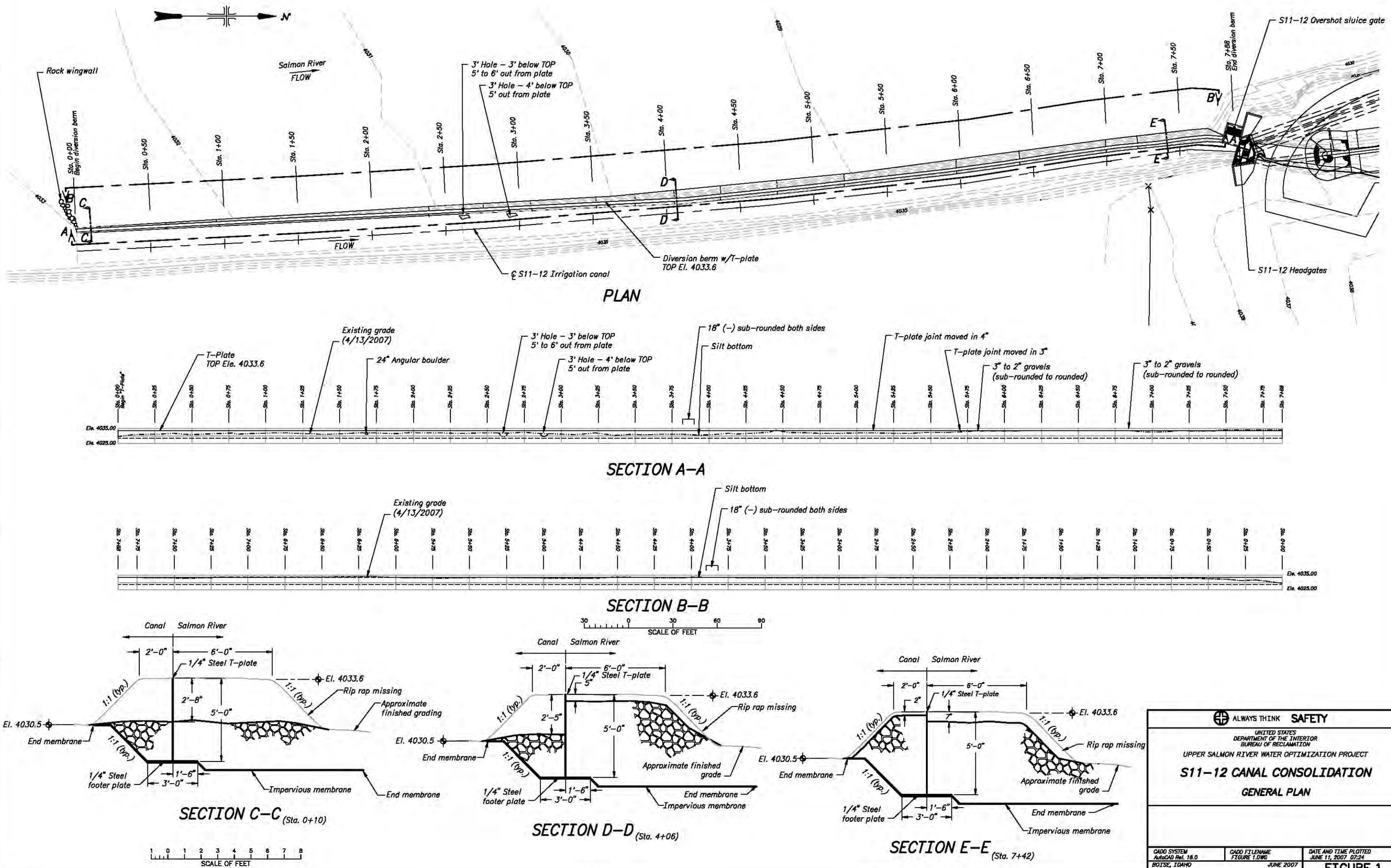
N
Salmon River
FLOW
Rock wingwall
Sta. 0+00 Begin diversion berm
Sta. 0+50
Sta. 1+00
Sta. 1+50
Sta. 2+00
Sta. 2+50
Sta. 3+00
Sta. 3+50
Sta. 4+00
Sta. 4+50
Sta. 5+00
Sta. 5+50
Sta. 6+00
Sta. 6+50
Sta. 7+00
Sta. 7+50
Sta. 7+88 End diversion berm
S11-12 Overshot sluice gate
3' Hole – 3' below TOP 5' to 6' out from plate
3' Hole – 4' below TOP 5' out from plate
FLOW
℄ S11-12 Irrigation canal
Diversion berm w/T-plate TOP El. 4033.6
S11-12 Headgates
PLAN
T-Plate TOP Ele. 4033.6
Existing grade (4/13/2007)
24" Angular boulder
3' Hole – 3' below TOP 5' to 6' out from plate
3' Hole – 4' below TOP 5' out from plate
18" (–) sub-rounded both sides
Silt bottom
T-plate joint moved in 4"
T-plate joint moved in 3"
3" to 2" gravels (sub-rounded to rounded)
3" to 2" gravels (sub-rounded to rounded)
Ele. 4035.00
Ele. 4025.00
SECTION A-A
Existing grade (4/13/2007)
Silt bottom
18" (–) sub-rounded both sides
SECTION B-B
Canal
Salmon River
2'-0"
6'-0"
1/4" Steel T-plate
El. 4033.6
1:1 (typ.)
Rip rap missing
Approximate finished grading
2'-8"
5'-0"
El. 4030.5
End membrane
1/4" Steel footer plate
1'-6"
3'-0"
Impervious membrane
End membrane
SECTION C-C (Sta. 0+10)
SCALE OF FEET
2'-5"
5"
Approximate finished grade
SECTION D-D (Sta. 4+06)
2"
SECTION E-E (Sta. 7+42)
ALWAYS THINK SAFETY
UNITED STATES DEPARTMENT OF THE INTERIOR BUREAU OF RECLAMATION
UPPER SALMON RIVER WATER OPTIMIZATION PROJECT
S11-12 CANAL CONSOLIDATION
GENERAL PLAN
CADD SYSTEM AutoCAD Rel. 16.0
CADD FILENAME FIGURE 1.DWG
DATE AND TIME PLOTTED JUNE 11, 2007 07:24
BOISE, IDAHO
JUNE 2007
FIGURE 1

FIGURE 2

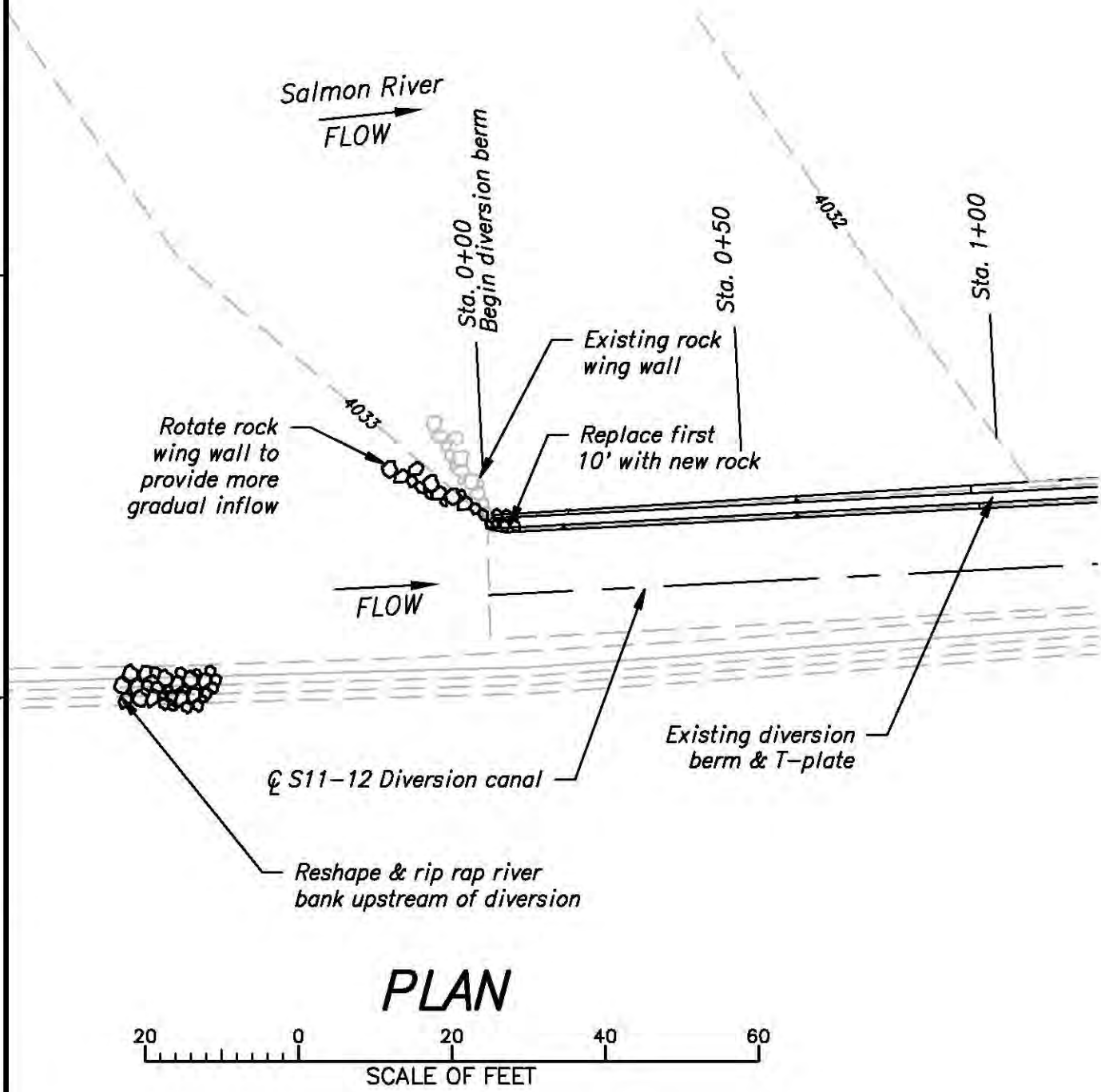

FOR OFFICIAL USE ONLY

ALWAYS THINK **SAFETY**

U.S. DEPARTMENT OF THE INTERIOR
BUREAU OF RECLAMATION

UPPER SALMON RIVER WATER OPTIMIZATION PROJECT

S11-12 CANAL CONSOLIDATION

ROCK WING WALL

SHEET OF

FIGURE 2

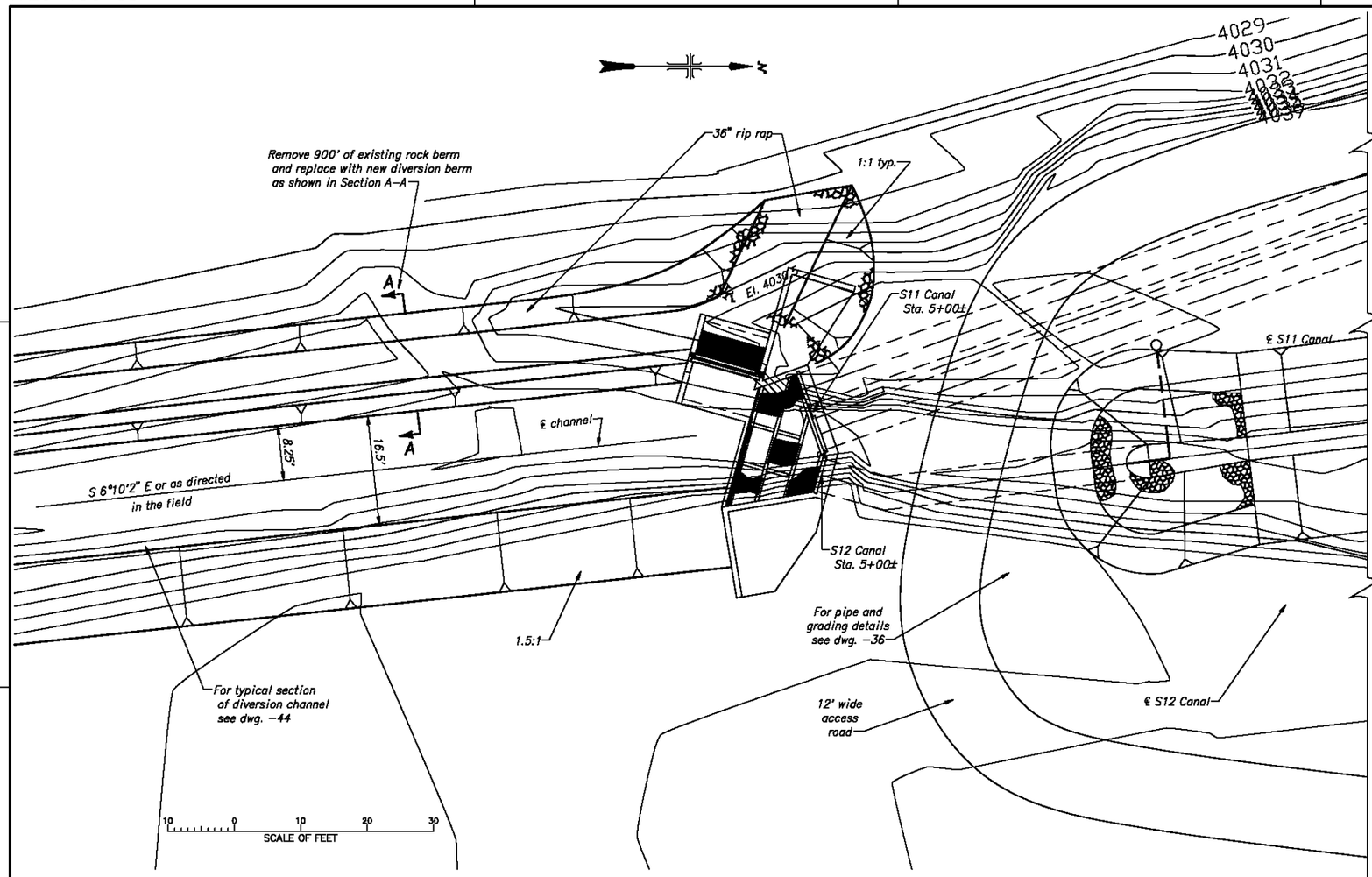

PLAN VIEW

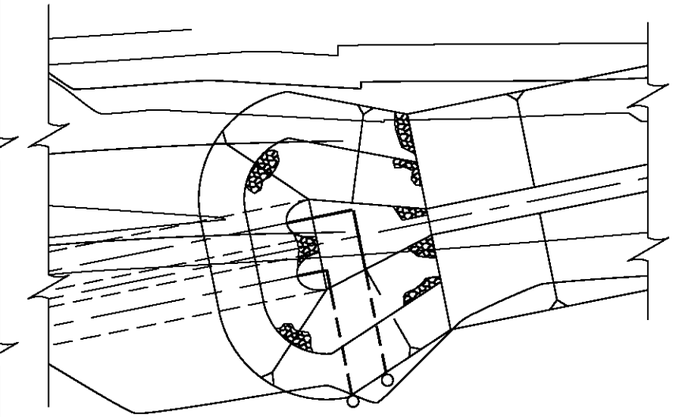

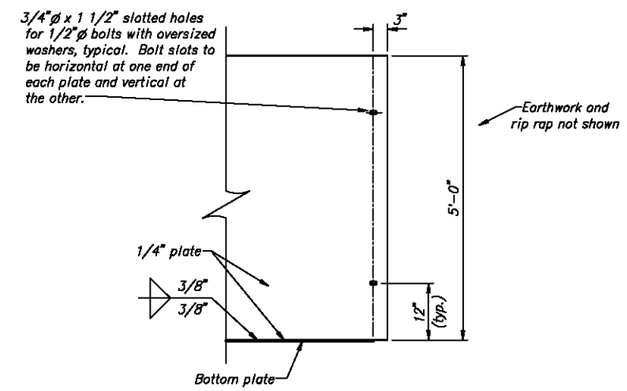

SECTION B–B
TYPICAL END VIEW

1 0 1 2 3 4 5
SCALE OF FEET

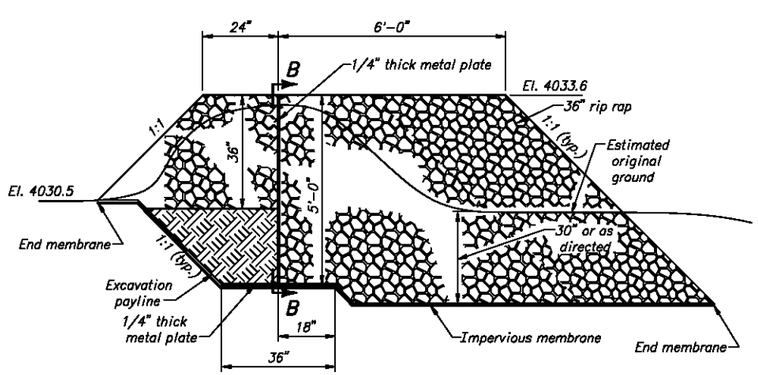

SECTION A–A
DIVERSION BERM
TYPICAL SECTION

1 0 1 2 3 4 5
SCALE OF FEET

NOTES:

1. Exact location and alignment of diversion berm plates as directed in field.
2. Total berm length = 900'
3. Individual plate lengths determined by contractor.
4. Trim base of metal plate as required to provide 1" max. gap between end of vertical metal plate and concrete wall of wasteway structure.
5. 2' minimum overlap of membrane against concrete wall to provide seal.

ALWAYS THINK **SAFETY**

UNITED STATES
DEPARTMENT OF THE INTERIOR
BUREAU OF RECLAMATION

UPPER SALMON RIVER WATER OPTIMIZATION PROJECT

S11–12 CANAL CONSOLIDATION

S11–12 CANALS HEADWORKS

SITE PLAN AND DIVERSION BERM SECTIONS

DESIGNED Phil Mann CHECKED Phil Mann
DRAWN Ed Mardhorst TECH. APPROVAL Dave Jennings
PROGRAM MANAGER

CADD SYSTEM	CADD FILENAME	DATE AND TIME PLOTTED
AutoCAD Rel. 16.0	1720–100–38.DWG	JUNE 11, 2007 09:55
BOISE, IDAHO	SEPTEMBER 2000	1720–100–38

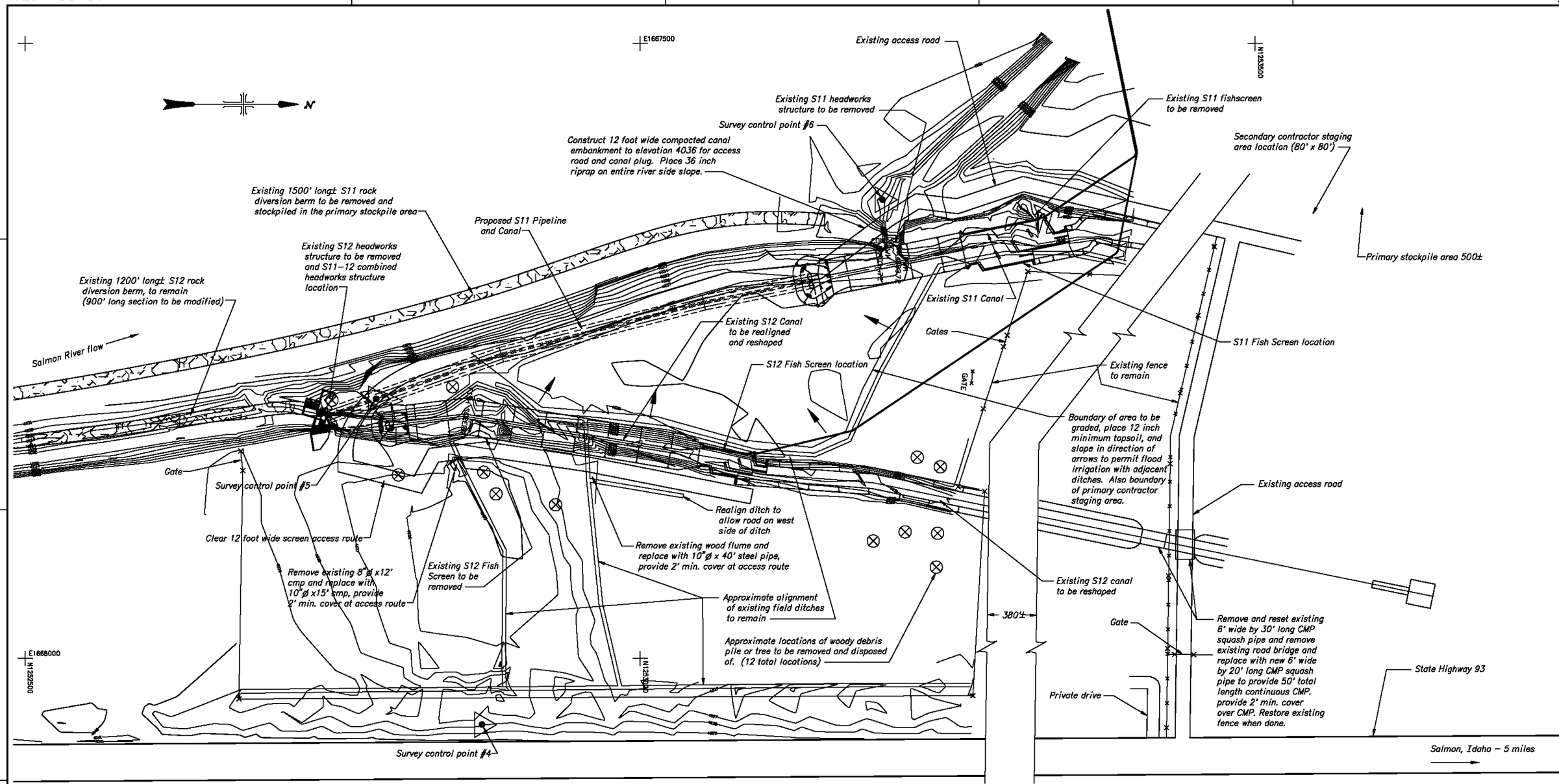

Note: All features outside of the topography are estimated.

40 0 40 80 120
SCALE OF FEET

SURVEY CONTROL POINTS

Point #	Northing	Easting	Elevation
4	1252871.31	1668053.69	4037.93
5	1252785.17	1667788.88	4038.31
6	1253197.03	1667627.01	4035.48

Date of survey June 28, 1999

ALWAYS THINK **SAFETY**

UNITED STATES
DEPARTMENT OF THE INTERIOR
BUREAU OF RECLAMATION

UPPER SALMON RIVER WATER OPTIMIZATION PROJECT

S11–12 CANAL CONSOLIDATION

GENERAL PLAN

DESIGNED Phil Mann CHECKED Phil Mann
DRAWN EDM/MS/PMM TECH. APPROVAL Dave Jennings
PROGRAM MANAGER

CADD SYSTEM AutoCAD Rel. 16.0	CADD FILENAME 1720–100–54.DWG	DATE AND TIME PLOTTED JUNE 11, 2007 09:58
BOISE, IDAHO	JULY 2001	1720–100–54