Grant Soil and Water Conservation District
721 S. Canyon Blvd. - John Day, Oregon 97845 - Phone (541) 575-0135 - Fax (541) 575-0646

BUREAU OF RECLAMATION
OFFICIAL FILE COPY
JAN 11 '06

TO	INIT	DATE
3420	LVW	1/12/06

CONTROL #:
FOLDER #:

January 9, 2006

US Bureau of Reclamation
P.O. Box 909, Patterson Bridge Rd
John Day OR 97845
Attn: Mark L. Croghan, Subbasin Liaison

US Bureau of Reclamation
1150 N. Curtis Road, Suite 100
Boise ID 83706-1234
Attn: Lisa V. Wuttke

Subject: **As-Built Drawing Submittal**
Contract No. 03CA101530
Task Order No. 03A3101530 – Patterson Diversion
Task Order No. 03A5101530 – SF #2 Cummings Ditch Diversion
Task Order No. 03A8101530 – SF # 7 Gibb Gregg Diversion
Task Order No. 03A9101530 – Holliday Ranch (Main Stem) Diversion
Task Order No. 03B1101530 – Raymond Diversion

Enclosed are the As-Built Drawings for the Patterson, Cummings Ditch, Gregg, Holliday, & Raymond Diversions.

These projects were completed during the 2005 in-stream construction season.

If you have any questions or comments regarding this design or submittal please don't hesitate to give me a call (541) 575-0135 ext 106.

Sincerely,

Gary A. Wilson

Gary A. Wilson PE
District Engineer

SITE PLAN VIEW

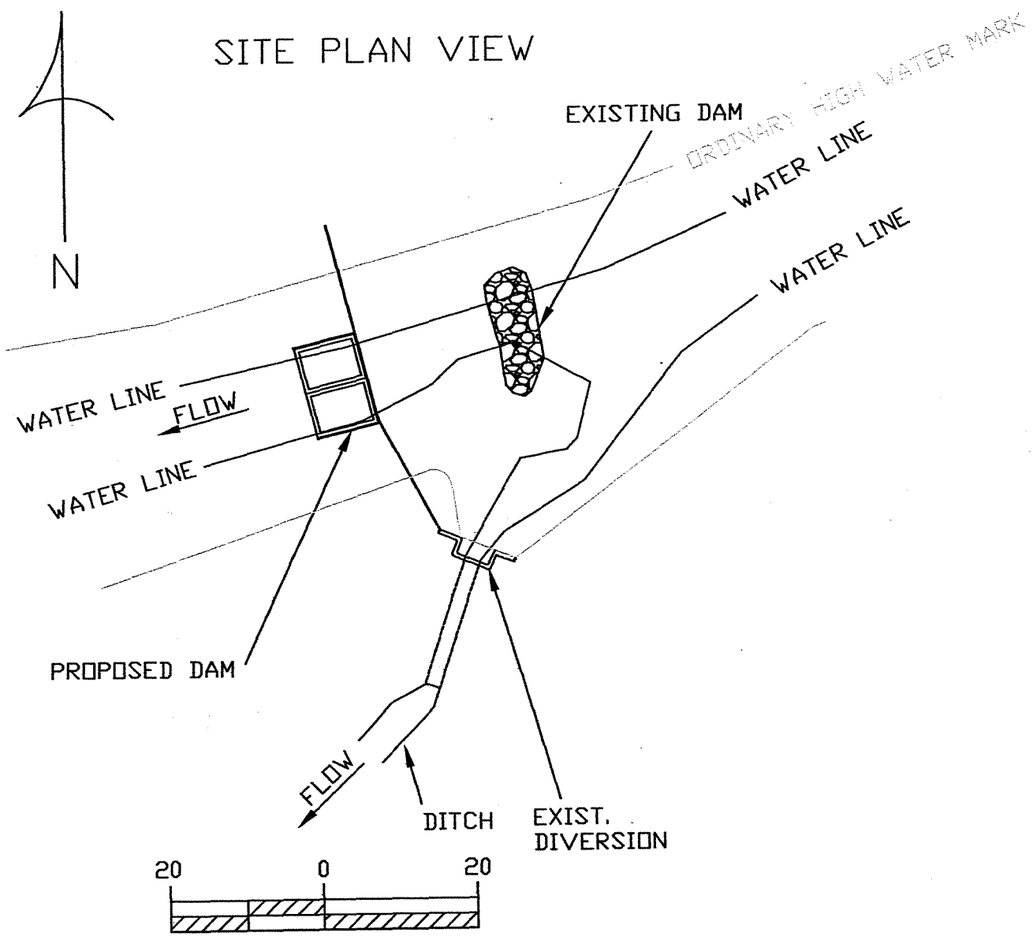

LOCATION MAP

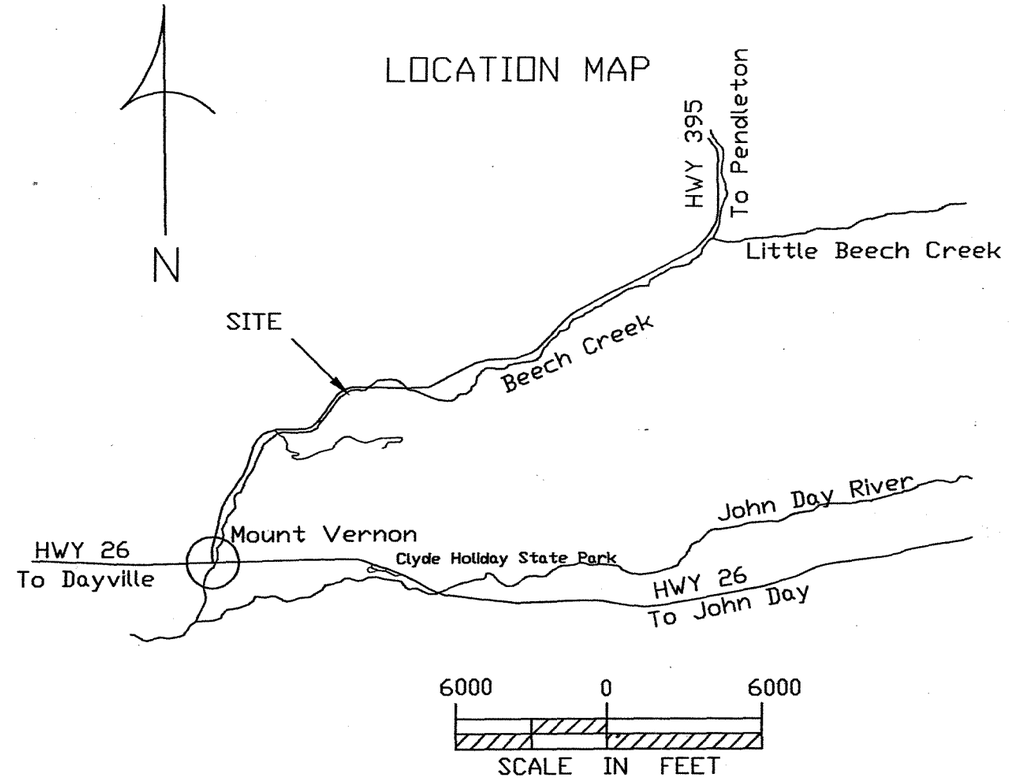

PROJECT LOCATION
SE CORNER OF SW 1/4 SECTION 15
TOWNSHIP 13S - RANGE 30E

NOTES

INSTALL A FLOW MEASURING FLUME DOWNSTREAM FROM THE EXISTING FISH SCREEN. ACCESS ROADS ARE TO BE LEFT IN THE SAME CONDITION AS BEFORE THE PROJECT.

REGISTERED PROFESSIONAL ENGINEER 11,450 OREGON DECEMBER 3, 1981 GARY A. WILSON

Gary A. Wilson

EXPIRES 6/30/2006

AS BUILT 1/3/06 KHD

		DATE
DESIGNED	G. WILSON	11/04
PLOTTED		4/13/05
CHECKED		
APPROVED		

PATTERSON DIVERSION
SITE PLAN & LOCATION MAP
GRANT COUNTY, OREGON

GRANT SOIL & WATER CONSERVATION DISTRICT

CADFILE
Patterson

SHEET 1
OF 7

DAM PLAN VIEW

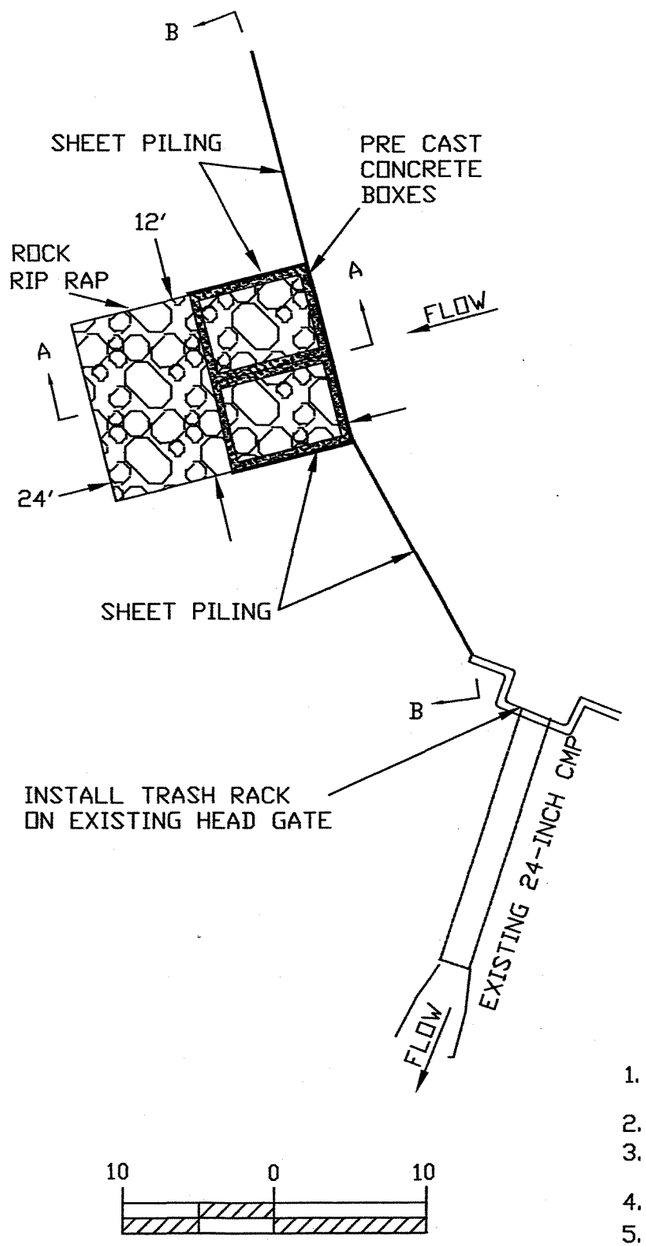

SECTION A-A

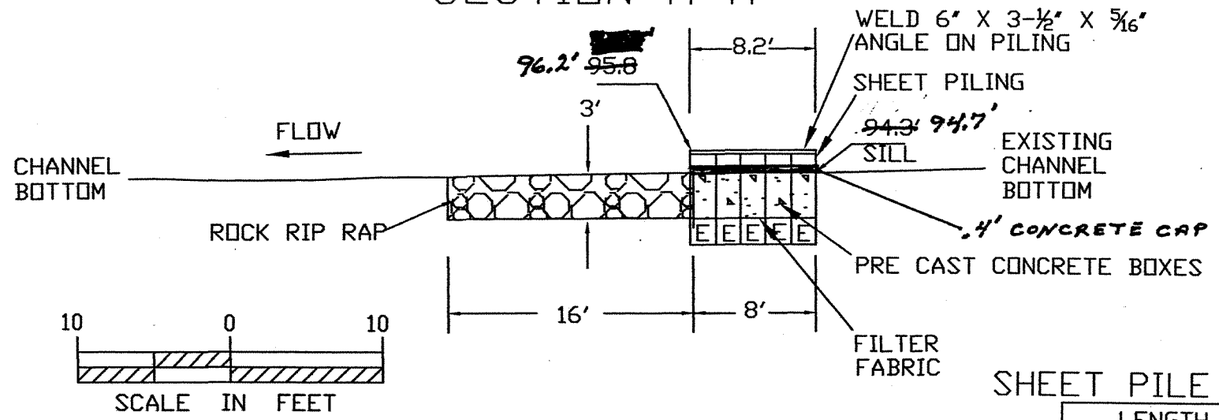

SHEET PILE CUT SCHEDULE

	LENGTH	# REQUIRED
A	5' 0"	13 Each
B	5' 6"	2 Each
C	6' 0"	7 Each
D	6' 6"	2 Each
E	7' 6"	12 Each

SECTION B-B

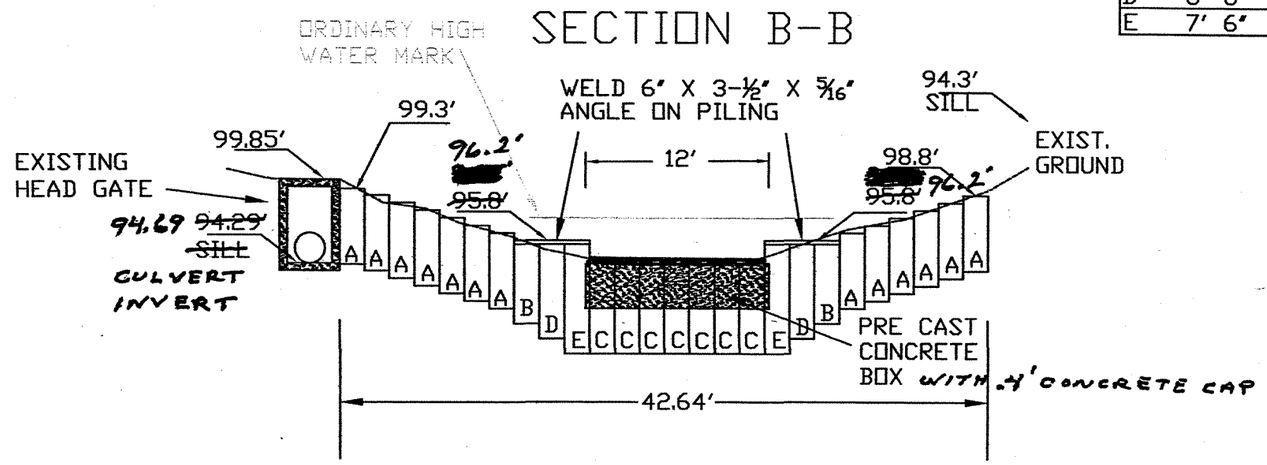

NOTES

1. SHEET PILING TO BE DRIVEN OR VIBRATED INTO PLACE, NO EXCAVATION WILL BE ALLOWED UNLESS APPROVED BY THE ENGINEER.
2. PLACE CONCRETE BOXES ON FILTER FABRIC AND FILL WITH RIPRAP.
3. SHAPE CHANNEL DOWN STREAM OF CONCRETE BOX AS DIRECTED BY THE ENGINEER TO PROVIDE LOW FLOW CHANNEL FOR FISH PASSAGE.
4. WELD ANGLE IRON TOP CAP ON SHEET PILING AS SHOWN.
5. INSTALL SEDIMENT CONTROL MEASURES AS NECESSARY TO COMPLY WITH ENVIRONMENTAL PERMITTING REQUIREMENTS.

REGISTERED PROFESSIONAL ENGINEER 11,450 OREGON DECEMBER 3, 1981 GARY A. WILSON

EXPIRES 6/30/2006

AS BUILT 1/03/06 KHD

DESIGNED G. WILSON DATE 11/04
PLOTTED [signature] 4/13/05
CHECKED
APPROVED

PATTERSON DIVERSION
STRUCTURE PLAN
GRANT COUNTY, OREGON

GRANT SOIL & WATER CONSERVATION DISTRICT

CADFILE Patterson

SHEET 2 OF 7

PRE CAST CONCRETE BOX BOARD SUPPORT
ISOMETRIC VIEW

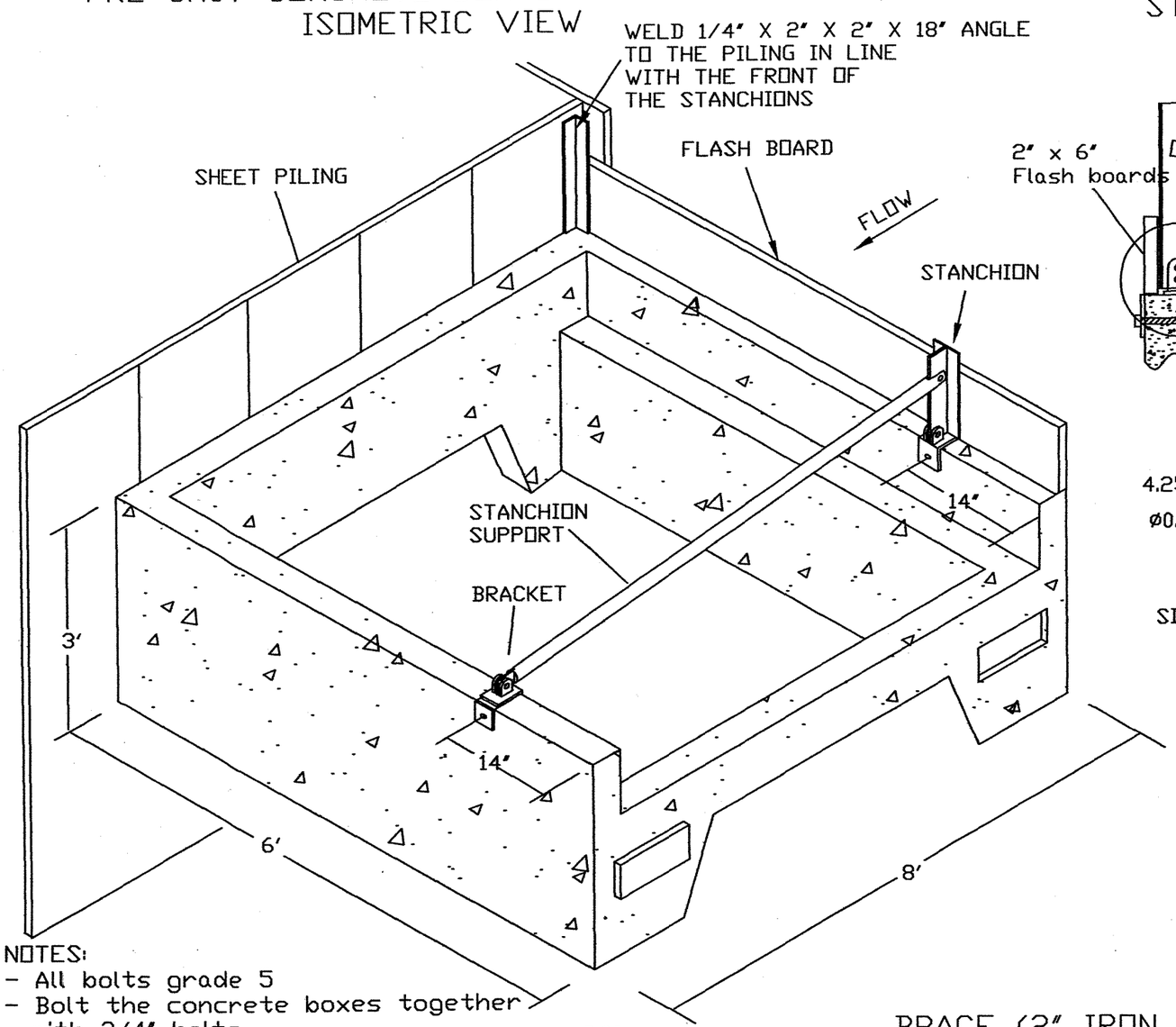

NOTES:
- All bolts grade 5
- Bolt the concrete boxes together with 3/4" bolts.
- Place boxes on filter fabric

STANCHION HINGE

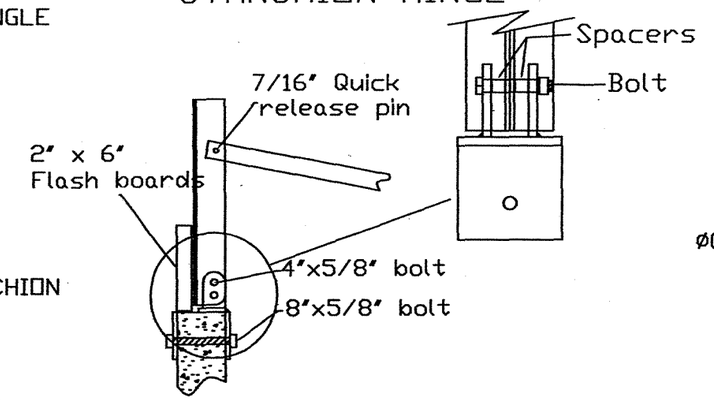

VERTICAL MEMBER

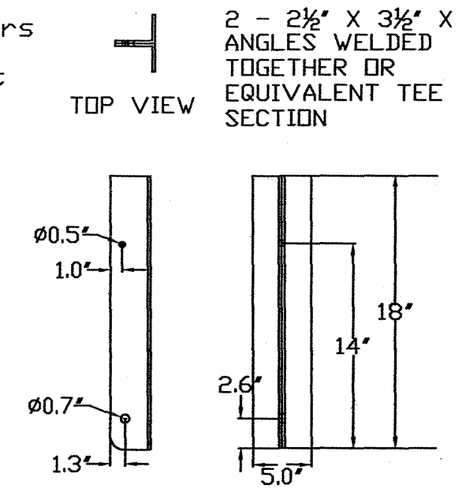

HINGE BRACKET

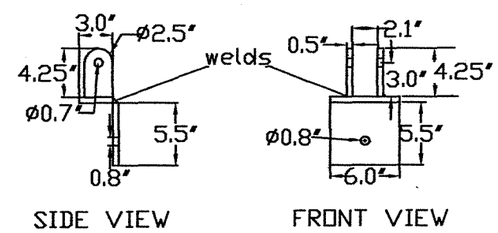

SPACERS

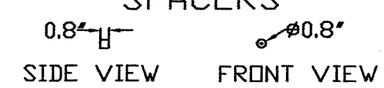

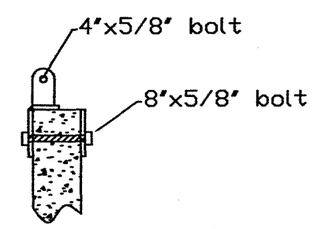

INSTALLATION DETAIL

WASHER

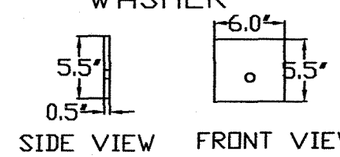

BRACE (2" IRON PIPE)

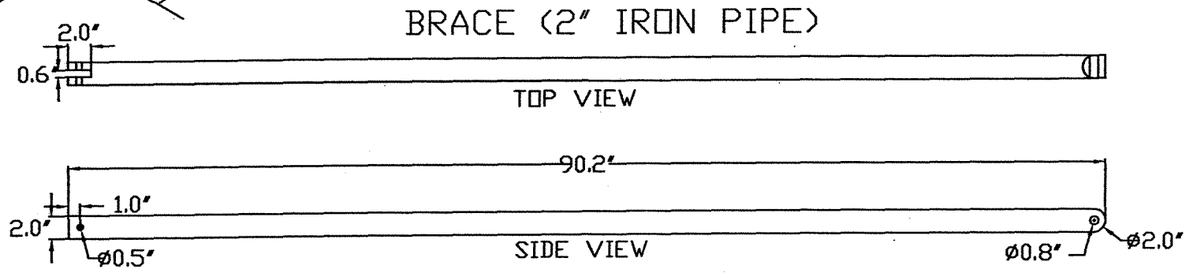

REGISTERED PROFESSIONAL ENGINEER 11,450 OREGON DECEMBER 3, 1981 GARY A. WILSON

EXPIRES 6/30/2006

AS BUILT 01/03/06 [illegible]

		DATE
DESIGNED	G. WILSON	11/04
PLOTTED	[illegible]	4/13/05
CHECKED		
APPROVED		

PATTERSON DIVERSION
PRE CAST BOX & STANCHION ASSEMBLY DETAIL
GRANT COUNTY, OREGON

GRANT SOIL & WATER CONSERVATION DISTRICT

CADFILE Patterson

SHEET 3 OF 7

FISH PASSAGE FLASH BOARD DETAILS

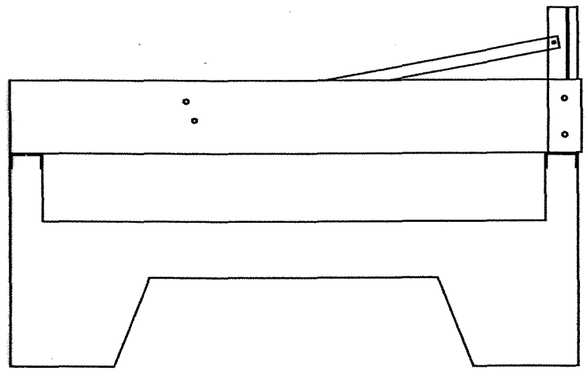

FISH STANCHION
PLAN VIEW
NOT TO SCALE

PRE CAST 8' CONCRETE BOX FISH PASSAGE
STRUCTURE ISOMETRIC VIEW
NOT TO SCALE

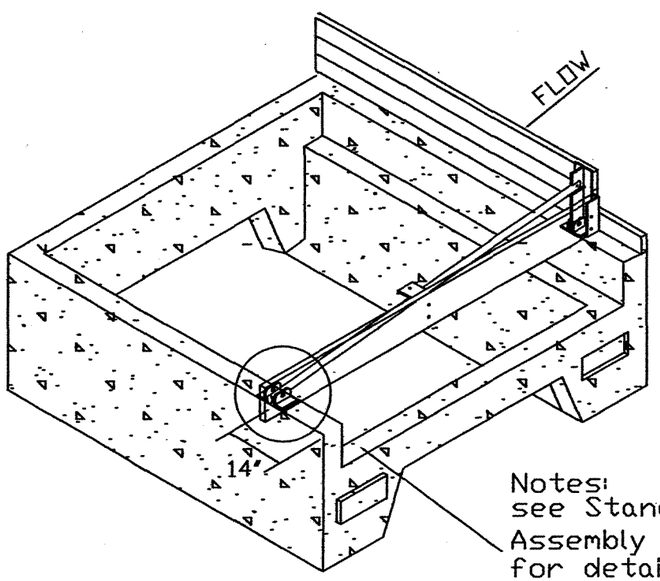

Notes:
see Stanchion
Assembly drawing
for details on hinge,
brace, washer, and
spacer

FISH PASSAGE FLASH
BOARD SUPPORTS

FOUR NEEDED

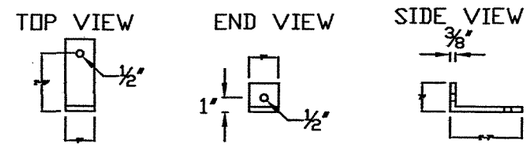

TWO NEEDED

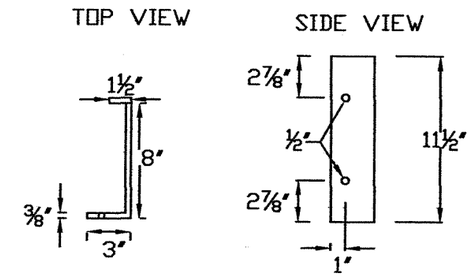

FISH PASSAGE FLASH BOARD
TWO NEEDED
NOT TO SCALE

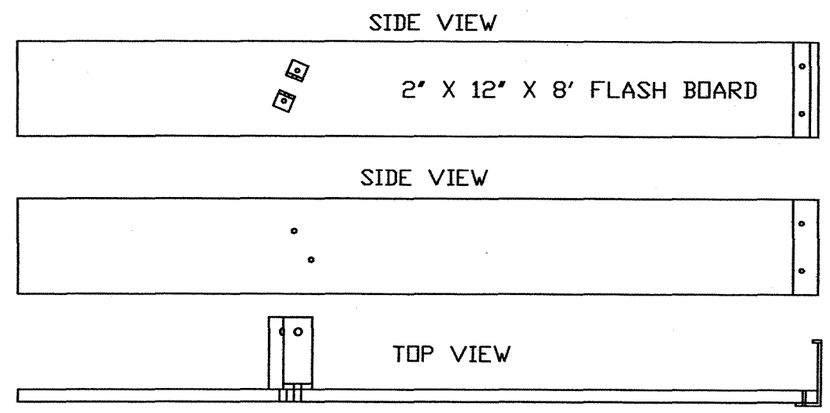

EXPIRES 6/30/2006

AS BUILT 01/03/06 KTD

		DATE
DESIGNED	G. WILSON	11/04
PLOTTED		4/13/05
CHECKED		
APPROVED		

PATTERSON DIVERSION
FISH PASSAGE FLASH BOARD DETAIL
GRANT COUNTY, OREGON

GRANT SOIL & WATER CONSERVATION DISTRICT

CADFILE
Patterson

SHEET 4
OF 7

PRE CAST CONCRETE BOX ASSEMBLY
ISOMETRIC VIEW

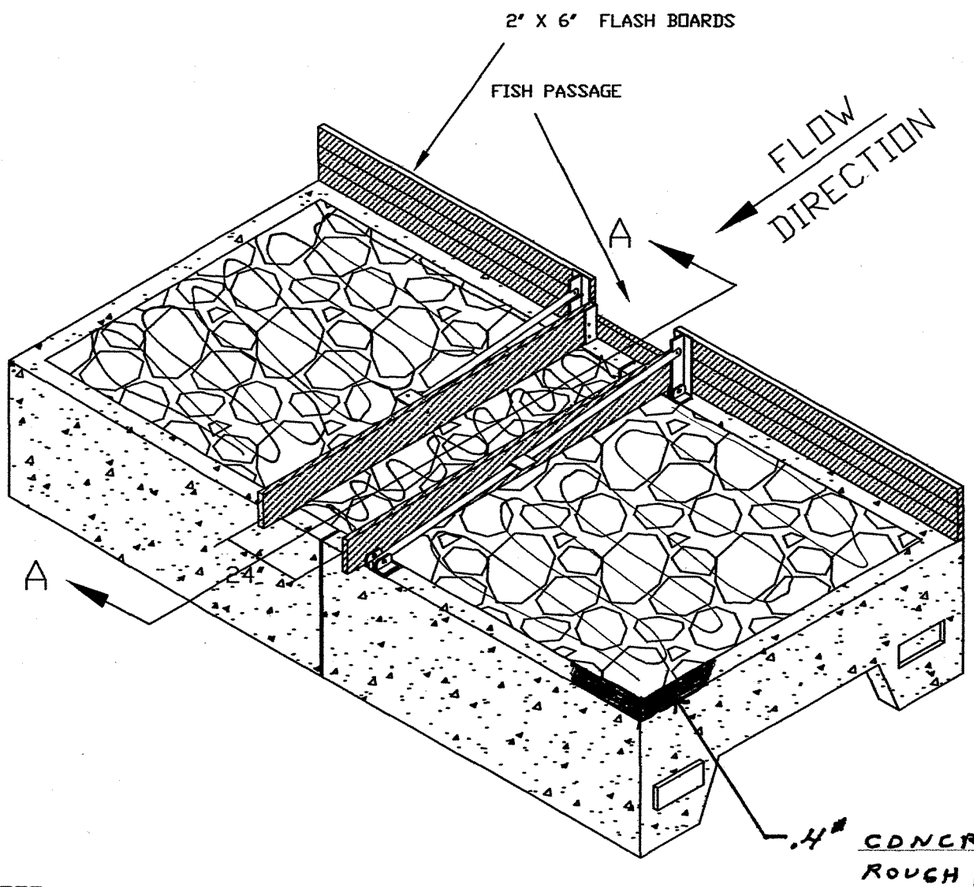

NOTE
SHAPE ROCK TO CREATE PLUNGE POOL AND DEFINE LOW FLOW FISH PASSAGE

FISH PASSAGE FLOW		
CONDITION	FLOW	VELOCITY
LOW WATER	0.9 CFS	2 FPS
HIGH WATER	7 CFS	3.5 FPS

SECTION A - A
FISH PASSAGE
NOT TO SCALE

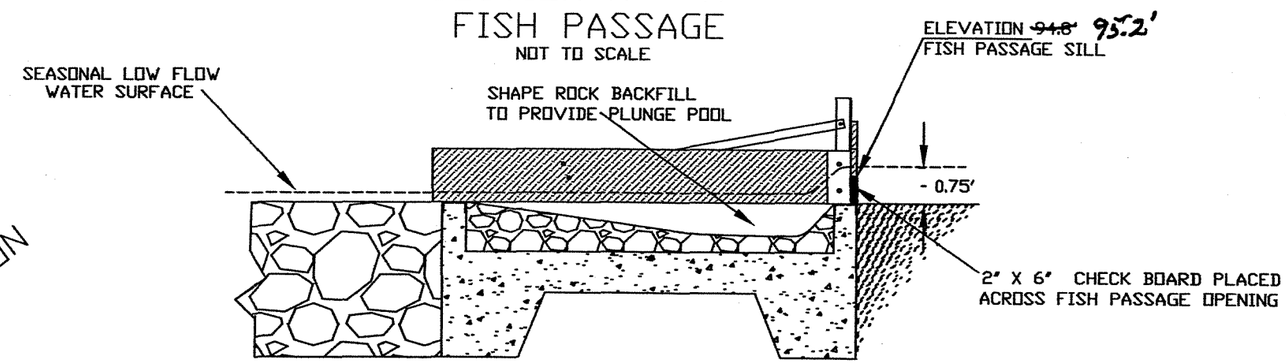

IRRIGATION DIVERSION ACTIVE
SEASONAL LOW FLOW

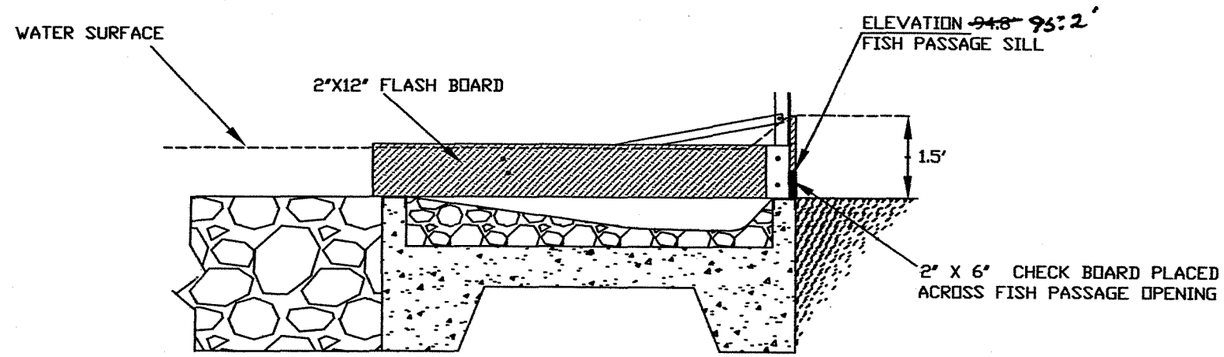

IRRIGATION DIVERSION ACTIVE
FISH PASSAGE AT FULL CAPACITY

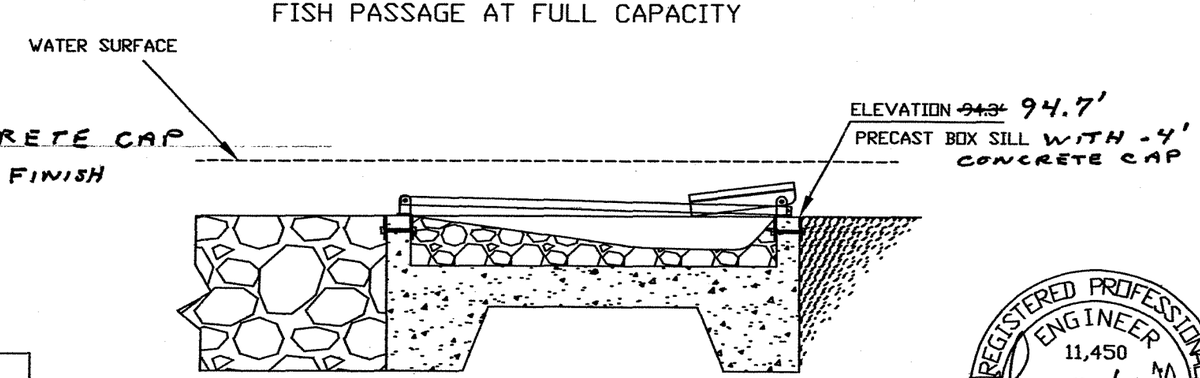

IRRIGATION DIVERSION INACTIVE
FLASH BOARDS REMOVED
STANCHIONS FOLDED DOWN

REGISTERED PROFESSIONAL ENGINEER
11,450
Gary A. Wilson
OREGON
DECEMBER 3, 1981
GARY A. WILSON

EXPIRES 6/30/2006

AS BUILT 01/03/06 KMD

		DATE
DESIGNED	G. WILSON	3/05
PLOTTED		4/13/05
CHECKED		
APPROVED		

PATTERSON DIVERSION
FISH PASSAGE OPERATION DETAIL
GRANT COUNTY, OREGON
GRANT SOIL & WATER CONSERVATION DISTRICT

CADFILE
Patterson

SHEET 5
OF 7

MEASURING FLUME INSTALLATION
ELEVATION VIEW

NOT TO SCALE

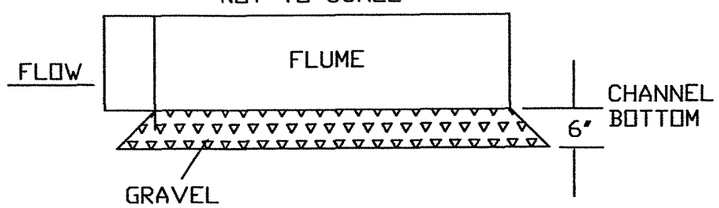

INSTALL FLUME ACCORDING TO THE MANUFACTURERS INSTRUCTIONS

GRAVEL TO BE CLEAN ROCK, MAXIMUM PARTICLE SIZE 2"

INSTALL FLUME AT LEAST 50' DOWNSTREAM FROM THE NEW FISH SCREEN.

TRASH RACK
FRONT ELEVATION VIEW

WELD ALL INTERSECTIONS

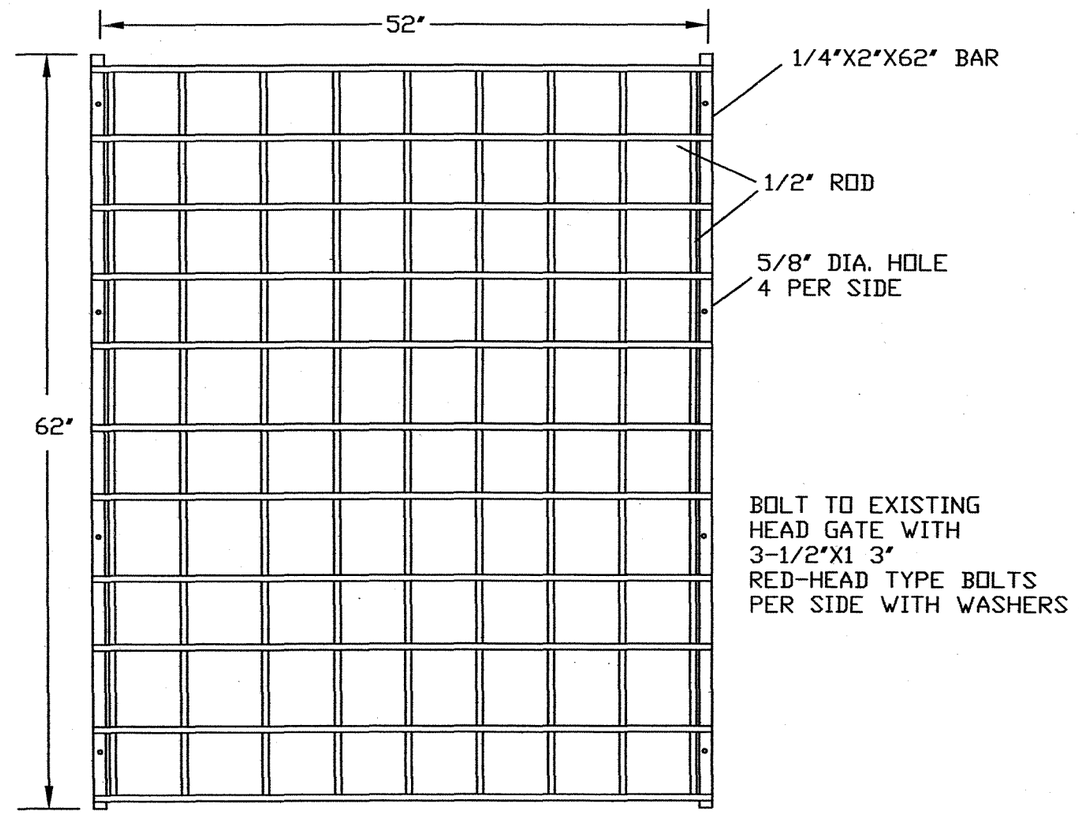

FISH PASSAGE
OPENING DETAIL

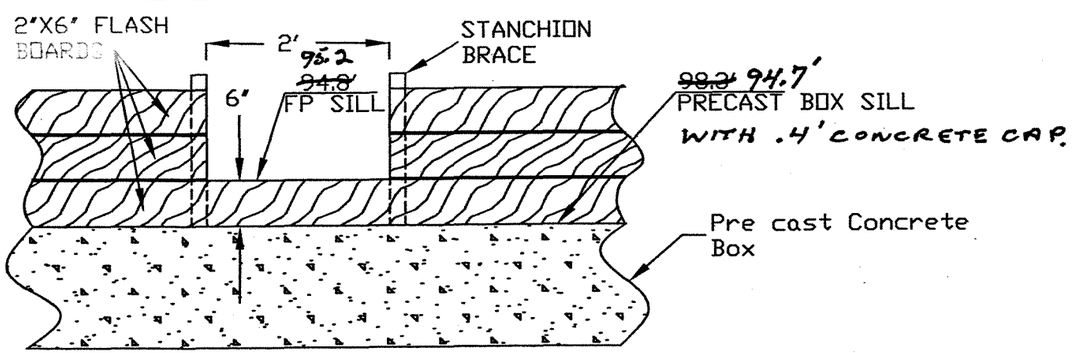

REGISTERED PROFESSIONAL ENGINEER
11,450
OREGON
DECEMBER 3, 1981
GARY A. WILSON

EXPIRES 6/30/2006

AS BUILT 01/03/06 KND

		DATE
DESIGNED	G. WILSON	11/04
PLOTTED		4/13/05
CHECKED		
APPROVED		

PATTERSON DIVERSION
MISCELLANEOUS DETAILS
GRANT COUNTY, OREGON

GRANT SOIL & WATER CONSERVATION DISTRICT

CADFILE
Patterson

SHEET 6
OF 7

Construction Material To Be Provided By Owner

Item	Quantity Required		Remarks
Fabricated Items			
6'x 8' Precast Concrete Boxes	2	Ea	
Stanchion Assemblies	2	Ea	Includes Vertical Member, Brace & 2 Hinge Assemblies
Trash Rack	1	Ea	
Flow Measurement Flume	1	Ea	
Bolts, Nuts & Washers			
3/4" x 18" all thread	2	Ea	Used to Join Concrete Boxes
3/4" Nuts	4	Ea	" " " "
3/4" Flat Washers	4	Ea	" " " "
3/4"Lock Washers	4	Ea	" " " "
5/8" x 8" Bolts	4	Ea	Used to Attach Stanchion Brackets To Conc Box
5/8" Nuts	4	Ea	" " " "
5/8" Flat Washers	8	Ea	" " " "
5/8" Lock Washers	4	Ea	" " " "
5/8" x 4" Bolts	4	Ea	Used to attach Stanchion & Brace to Hinge Bracket
5/8" Nuts	4	Ea	" " " "
5/8" Flat Washers	8	Ea	" " " "
5/8" Lock Washers	4	Ea	" " " "
1/2" x 3" red-head type bolts	8	Ea	Used to Attach Trash Rack
1/2" Nuts	8	Ea	" " " "
1/2" Flat Washers	8	Ea	" " " "
1/2" Lock Washers	8	Ea	" " " "
Steel Parts			
1/4" x 2" x 2" x 18" angle pieces	2	Ea	
5/16"x 3-1/2" x 6" Angle (Top Cap)		LF	Contractor to Cut to Length (Bid Item #3)
Sheet Piling (19-1/2" width)	221	LF	Contractor to Cut to Length (Bid Item #3)
Miscellaneous			
Premix Concrete	6	Bags	Used to Fill Void Between Sheet Pile & Conc Box
Filter Fabric	16	SY	To be Placed Under Concrete Boxes

CONSTRUCTION BID ITEMS

Item No.	Item	Amount	Unit of Measure
#1	MOBILIZATION AND DEMOBILIZATION	All Reqd	Lump Sum
#2	SITE CLEARING, ENVIRONMENTAL PROTECTION AND CLEANUP	All Reqd	Lump Sum
#3	CUT STEEL SHEET PILING	All Reqd	Lump Sum
#4	EXCAVATION AND BACKFILL	40.00	Cubic Yard
#5	INSTALL INTERLOCKING STEEL SHEET PILING	221.00	Linear Foot
#6	INSTALL CONCRETE BOXES	All Reqd	Lump Sum
#7	INSTALL STANCHION ASSEMBLIES	All Reqd	Lump Sum
#8	INSTALL TRASH RACK ASSEMBLY	All Reqd	Lump Sum
#9	INSTALL FLOW MEASUREMENT FLUME	All Reqd	Lump Sum

AS BUILT 01/03/06 KKD

REGISTERED PROFESSIONAL ENGINEER 11,450 OREGON DECEMBER 3, 1981 GARY A. WILSON

Gary A. Wilson

EXPIRES 6/30/2006

DATE 11/04

DESIGNED G. WILSON

PLOTTED 4/13/05

CHECKED

APPROVED

PATTERSON DIVERSION
MATERIAL INVENTORY SHEET
GRANT COUNTY, OREGON

GRANT SOIL & WATER CONSERVATION DISTRICT

CADFILE Patterson

SHEET 7 OF 7

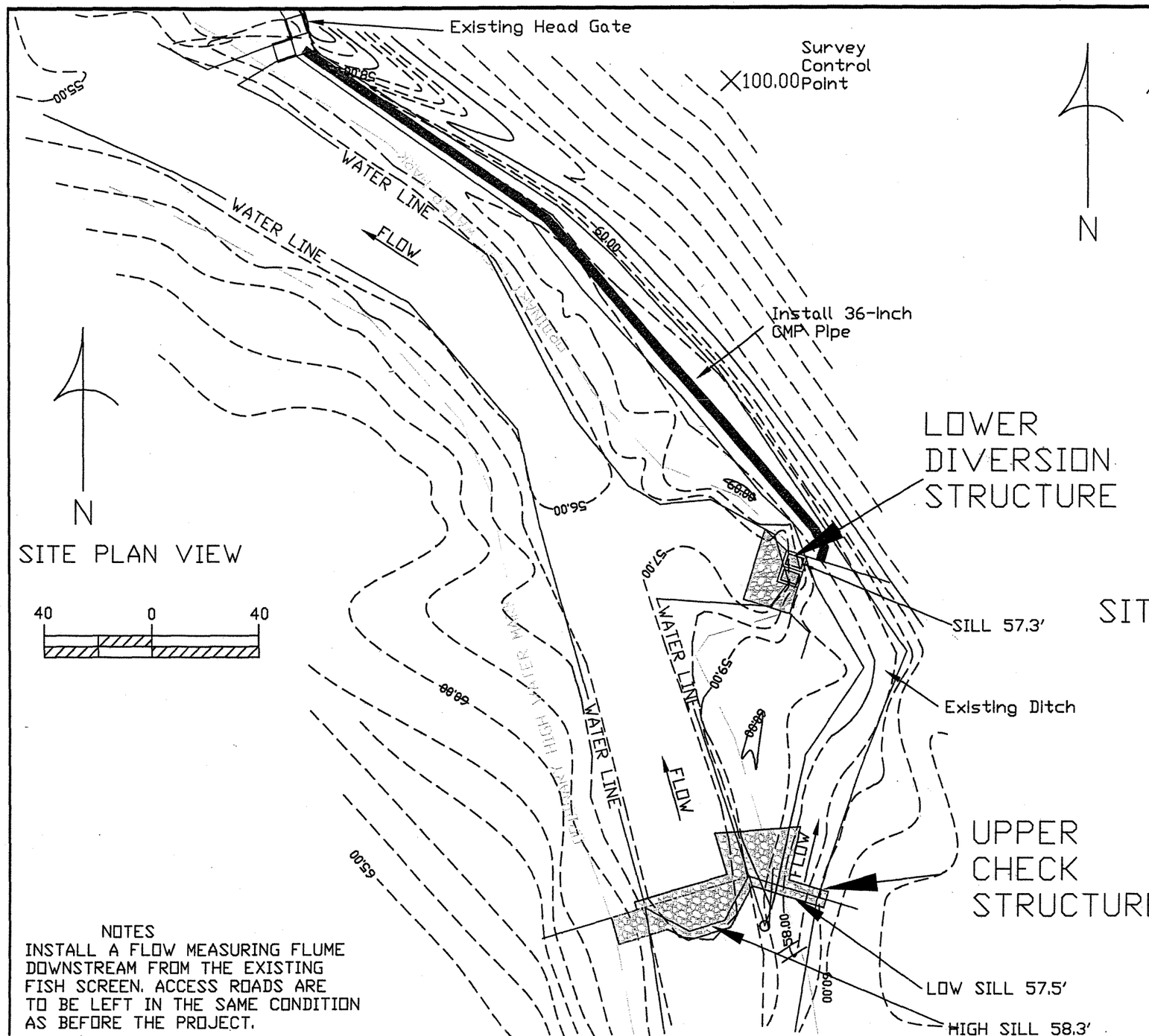

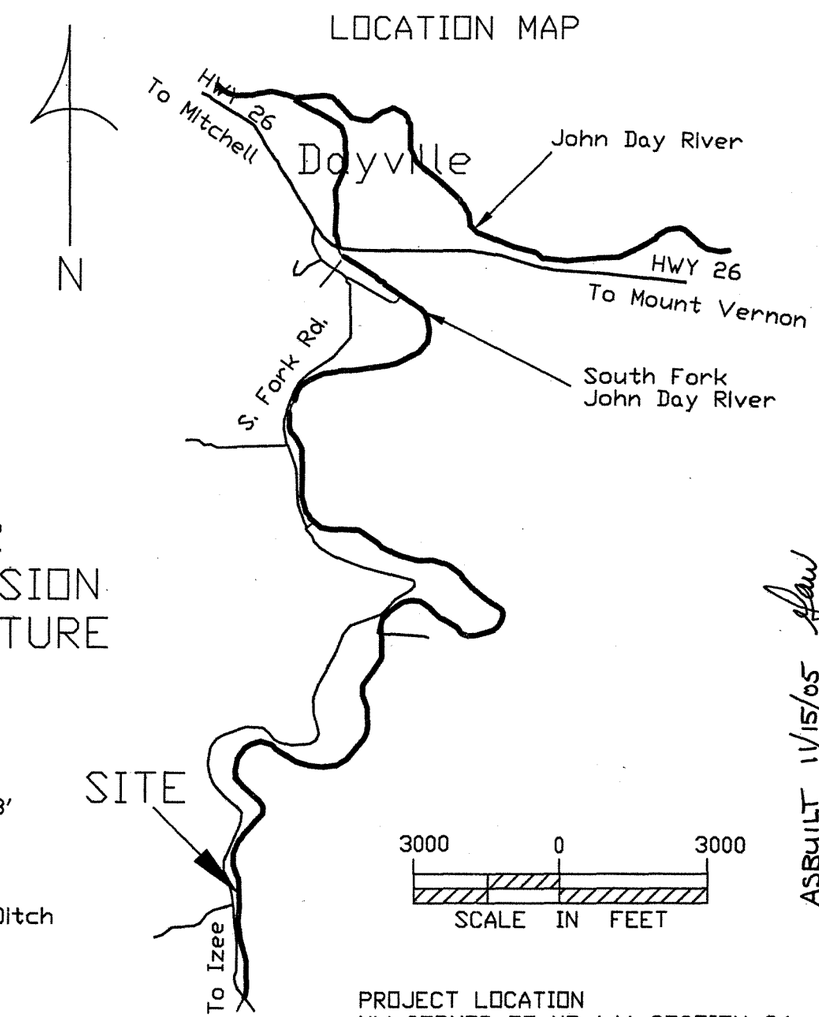

NOTES
INSTALL A FLOW MEASURING FLUME DOWNSTREAM FROM THE EXISTING FISH SCREEN. ACCESS ROADS ARE TO BE LEFT IN THE SAME CONDITION AS BEFORE THE PROJECT.

PROJECT LOCATION
NW CORNER OF NE 1/4 SECTION 24
TOWNSHIP 13S - RANGE 26E

REGISTERED PROFESSIONAL ENGINEER 11,450 OREGON DECEMBER 3, 1981 GARY A. WILSON

EXPIRES 6/30/2006

ASBUILT 11/15/05

		DATE
DESIGNED	G. WILSON	4/05
PLOTTED	4/20/05	
CHECKED		
APPROVED		

CUMMINGS DITCH DIVERSION
SITE PLAN & LOCATION MAP
GRANT COUNTY, OREGON

GRANT SOIL & WATER CONSERVATION DISTRICT

CADFILE cummingsditch

SHEET 1 OF 7

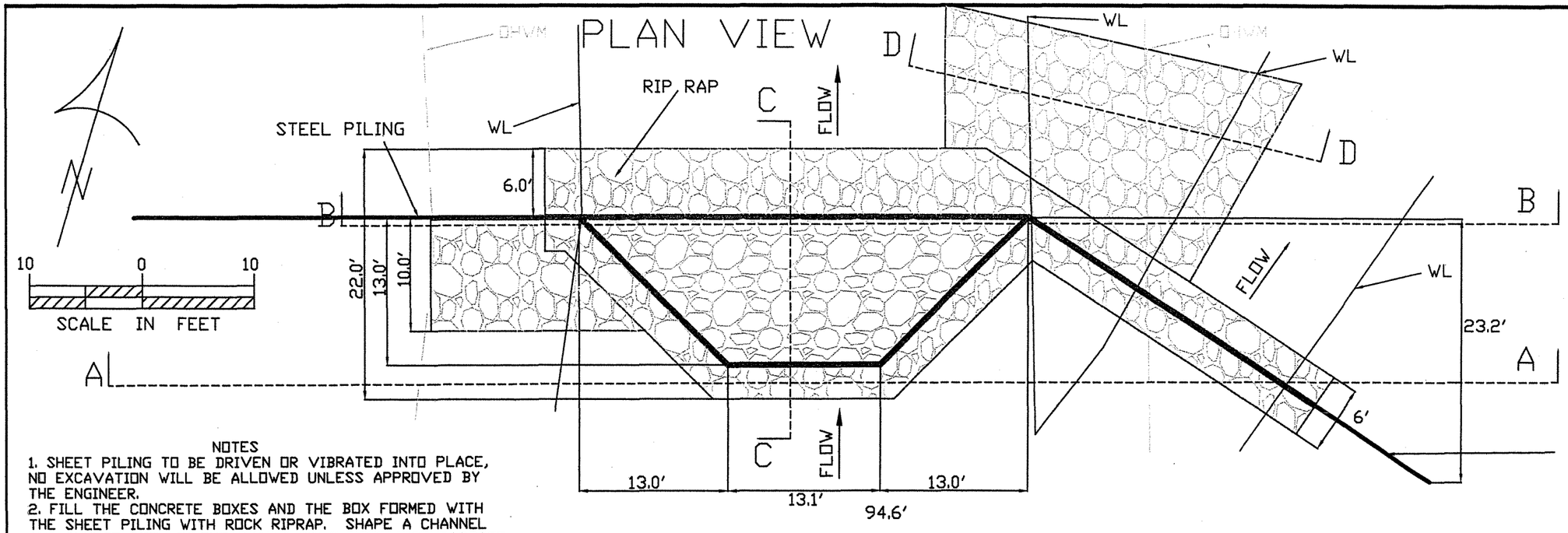

NOTES
1. SHEET PILING TO BE DRIVEN OR VIBRATED INTO PLACE, NO EXCAVATION WILL BE ALLOWED UNLESS APPROVED BY THE ENGINEER.
2. FILL THE CONCRETE BOXES AND THE BOX FORMED WITH THE SHEET PILING WITH ROCK RIPRAP. SHAPE A CHANNEL AND PLUNGE POOL IN THE RIPRAP BELOW THE FISH PASSAGE OPENING AS DIRECTED BY THE ENGINEER TO CONCENTRATE LOW FLOW TO ALLOW FISH TO MOVE PAST THE DAM.

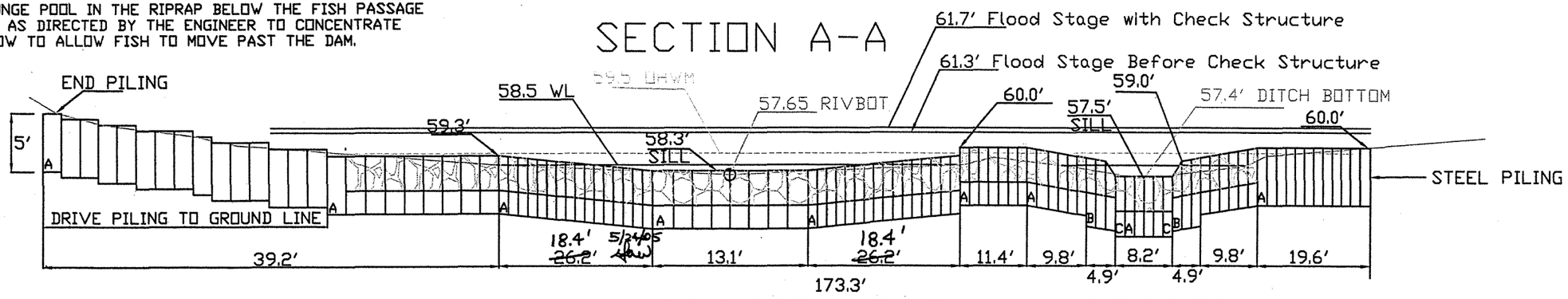

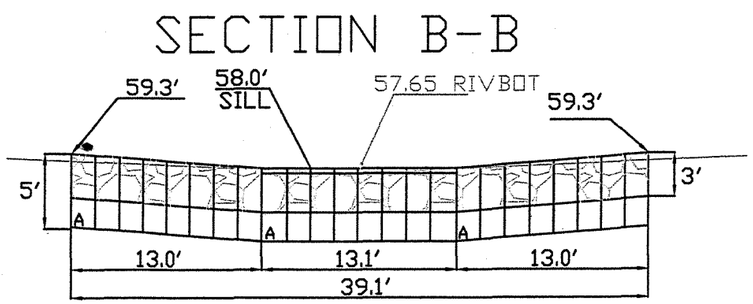

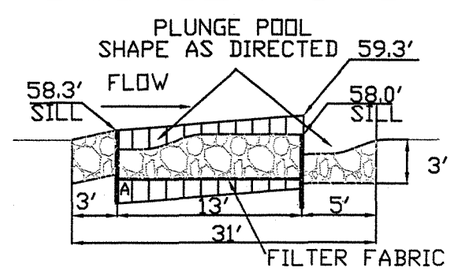

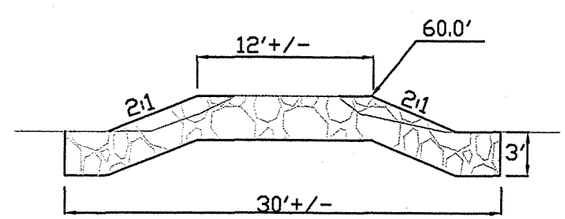

REGISTERED PROFESSIONAL ENGINEER 11,450 OREGON DECEMBER 3, 1981 GARY A. WILSON

EXPIRES 6/30/2006

ASBUILT 11/15/05

DESIGNED G. WILSON DATE 4/05
PLOTTED 4/20/05
CHECKED
APPROVED

CUMMINGS DITCH DIVERSION
UPPER CHECK STRUCTURE
GRANT COUNTY, OREGON

GRANT SOIL & WATER CONSERVATION DISTRICT

CADFILE Cummingsditch

SHEET 2 OF 7

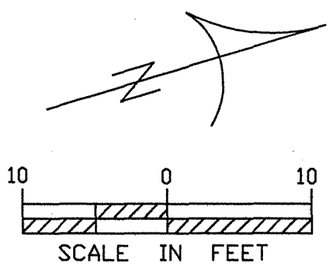

PLAN VIEW

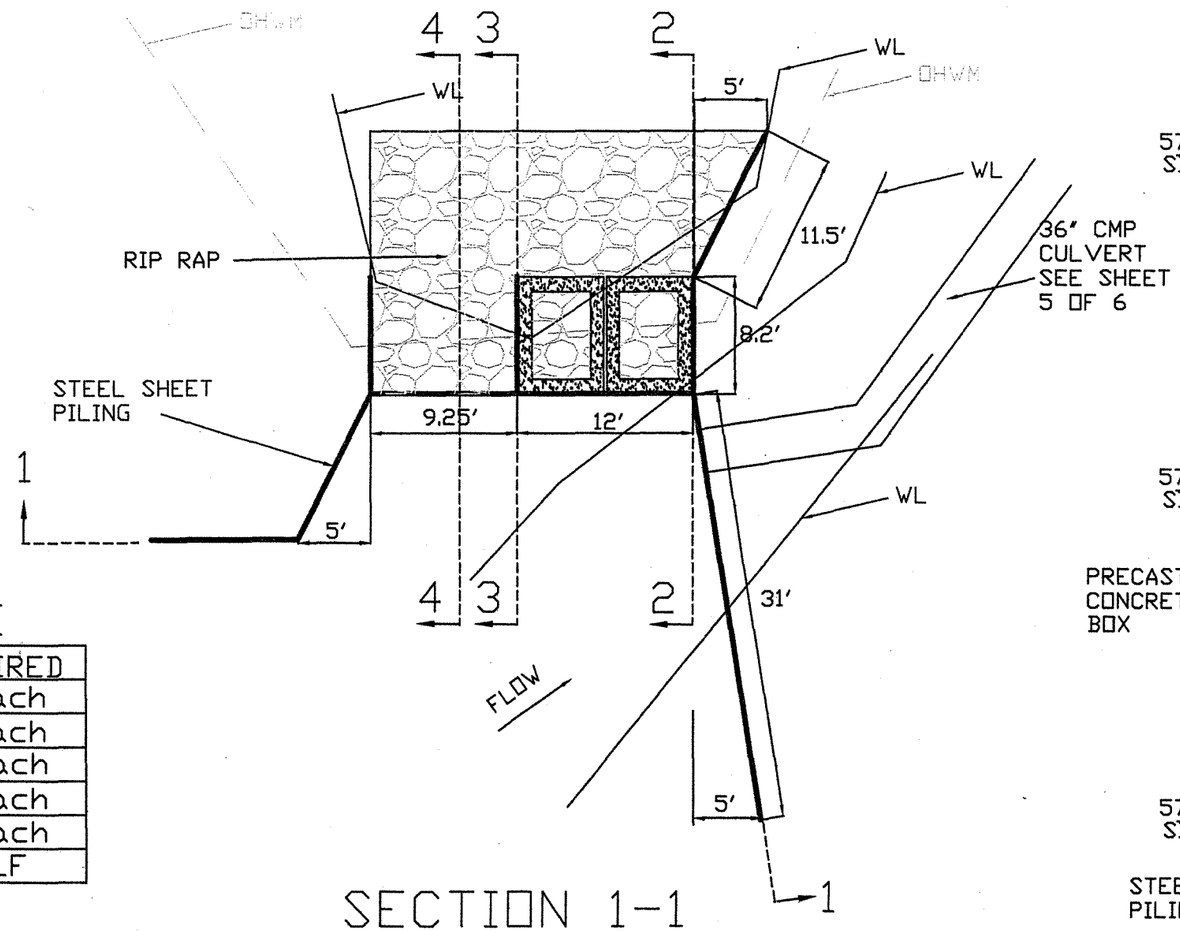

SHEET PILE CUT SCHEDULE

	LENGTH	# REQUIRED
A	5' 0"	138 Each
B	6' 0"	10 Each
C	6' 6"	18 Each
D	7' 0"	4 Each
E	8' 0"	21 Each
TOTAL LENGTH 1,063 LF		

SECTION 2-2

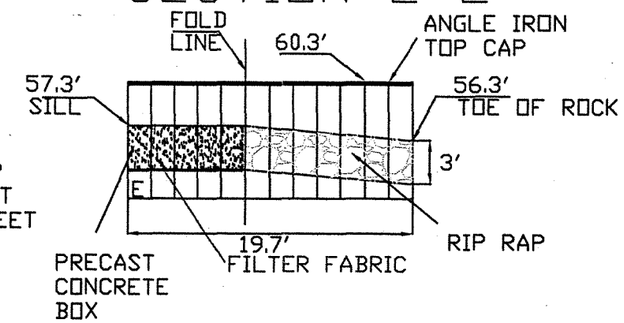

SECTION 3-3

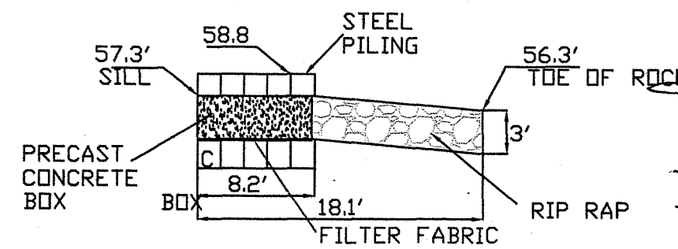

SECTION 4-4

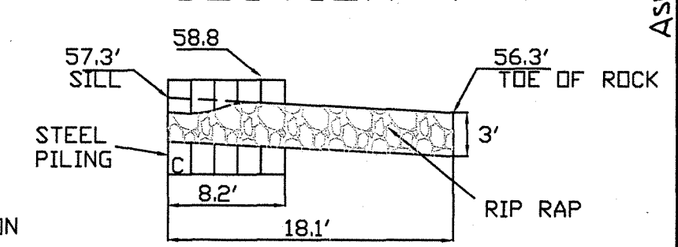

SECTION 1-1

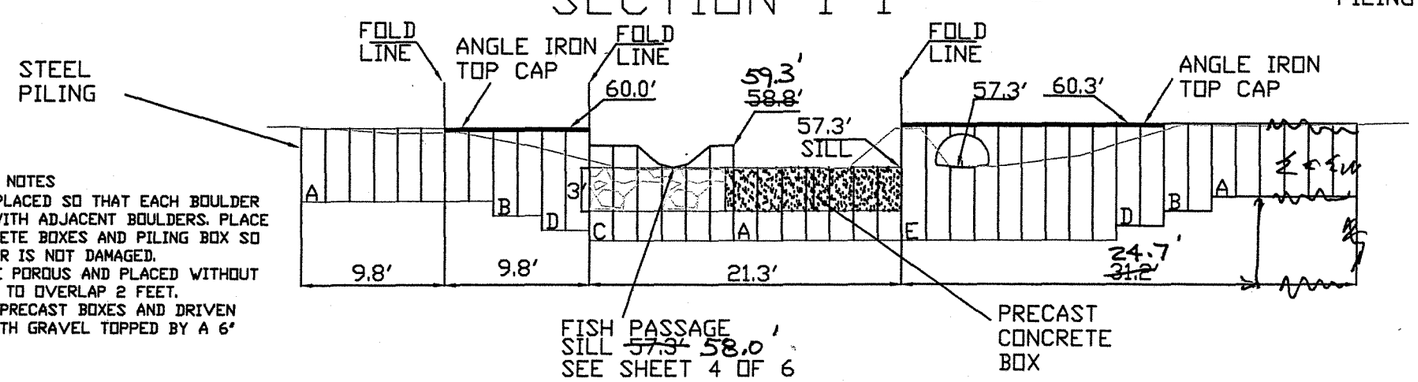

NOTES
1. ROCK RIPRAP TO BE PLACED SO THAT EACH BOULDER IS LOCKED IN PLACED WITH ADJACENT BOULDERS. PLACE ROCK INSIDE THE CONCRETE BOXES AND PILING BOX SO THAT THE FABRIC FILTER IS NOT DAMAGED.
2. FILTER FABRIC TO BE POROUS AND PLACED WITHOUT WRINKLES. JOINTS ARE TO OVERLAP 2 FEET.
3. FILL VOID BETWEEN PRECAST BOXES AND DRIVEN STEEL SHEET PILING WITH GRAVEL TOPPED BY A 6" THICK CONCRETE CAP.

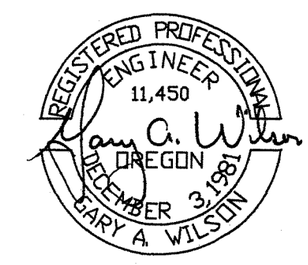

EXPIRES 6/30/2006

ASBUILT 11/15/05

		DATE
DESIGNED	G. WILSON	4/05
PLOTTED	4/20/05	
CHECKED		
APPROVED		

CUMMINGS DITCH DIVERSION
LOWER DIVERSION STRUCTURE
GRANT COUNTY, OREGON

GRANT SOIL & WATER CONSERVATION DISTRICT

CADFILE
Cummingsditch

SHEET 3
OF 7

FISH PASSAGE SILL DETAIL NTS

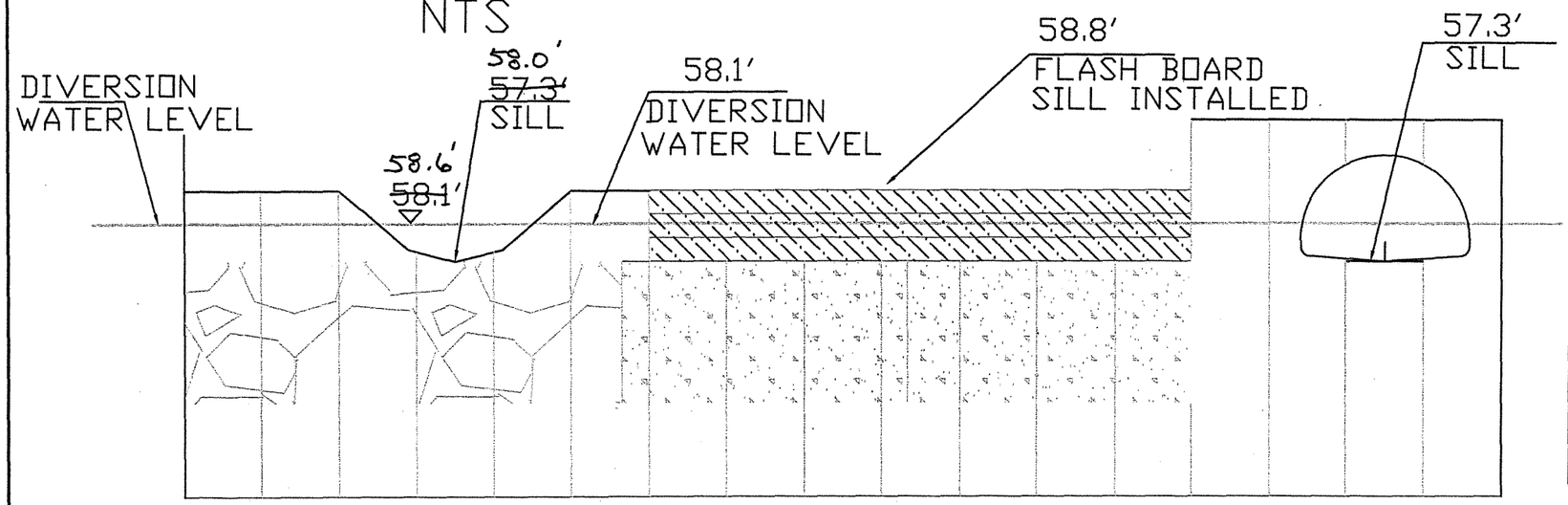

FISH PASSAGE NOTCH DETAIL NTS

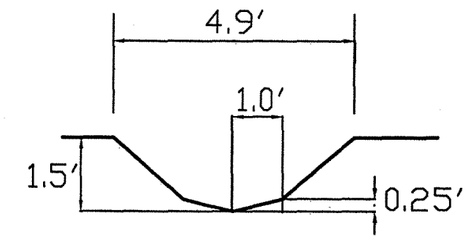

FISH PASSAGE FLOW		
FLOW DEPTH	0.8 FT	1.5 FT
WS ELEV.	58.1 FT	58.8 FT
FLOW	4.3 CFS	15.0 CFS
VELOCITY	2.5 FPS	3.3 FPS

ASBUILT 11/15/05

MEASURING FLUME INSTALLATION ELEVATION VIEW

NTS

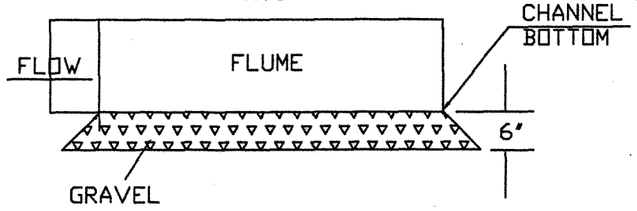

INSTALL FLUME ACCORDING TO THE MANUFACTURERS INSTRUCTIONS
GRAVEL TO BE CLEAN ROCK, MAXIMUM PARTICLE SIZE 2"
INSTALL FLUME AT LEAST 50' DOWNSTREAM FROM THE NEW FISH SCREEN.

FISH PASSAGE OUTFALL DETAIL NTS

5/24/05

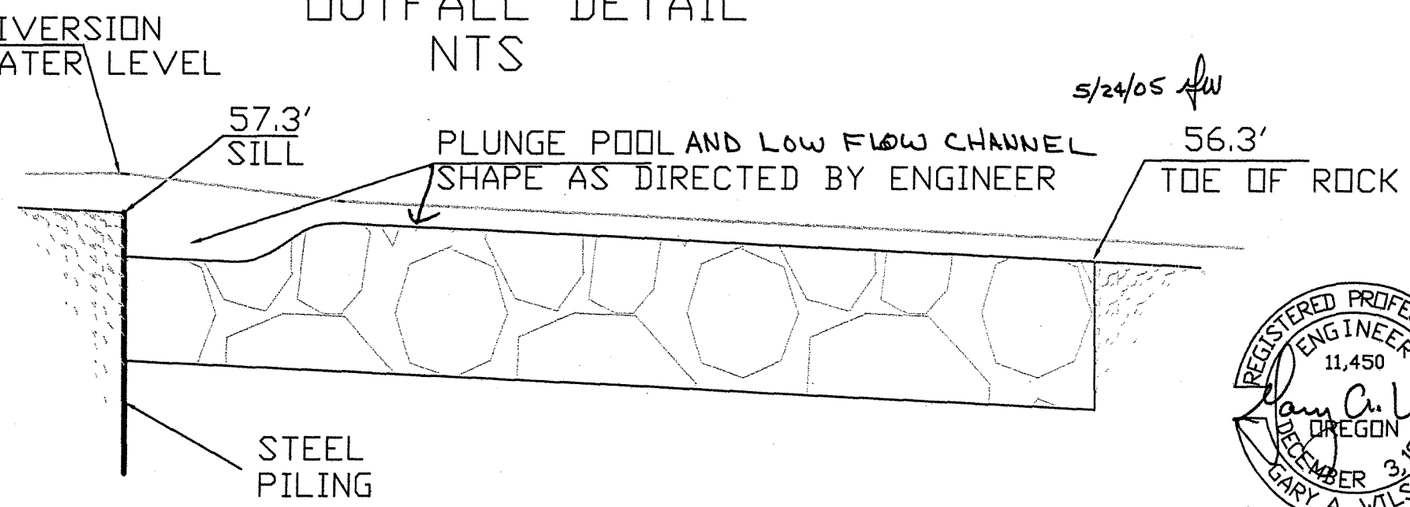

REGISTERED PROFESSIONAL ENGINEER 11,450 OREGON DECEMBER 3, 1981 GARY A. WILSON

EXPIRES 6/30/2006

DATE 4/05
DESIGNED G. WILSON
PLOTTED 4/20/05
CHECKED
APPROVED

CUMMINGS DITCH DIVERSION
LOWER DIVERSION FISH PASSAGE
GRANT COUNTY, OREGON

GRANT SOIL & WATER CONSERVATION DISTRICT

CADFILE Cummingsditch

SHEET 4 OF 7

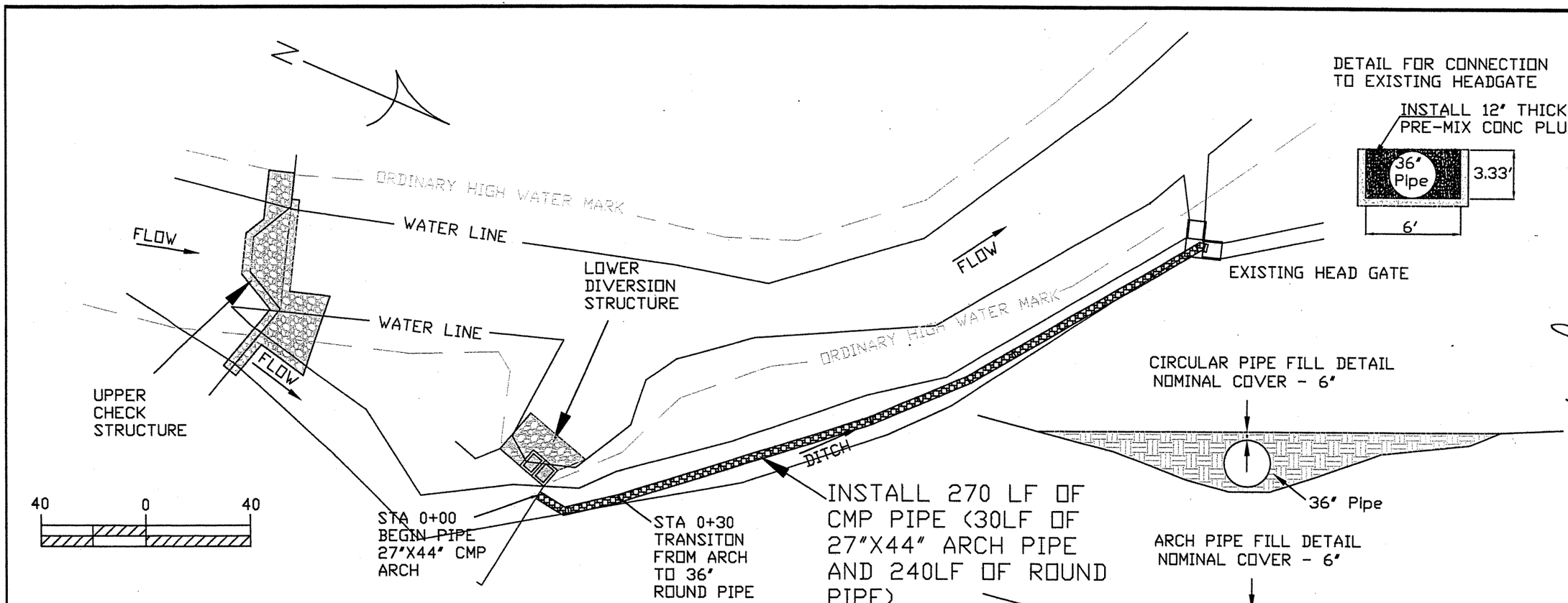

DETAIL FOR CONNECTION TO EXISTING HEADGATE

CIRCULAR PIPE FILL DETAIL
NOMINAL COVER - 6"

ARCH PIPE FILL DETAIL
NOMINAL COVER - 6"

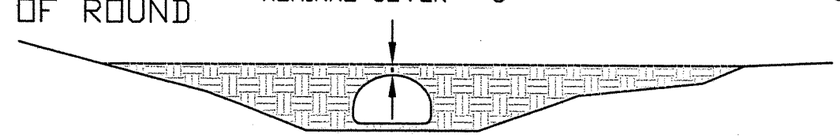

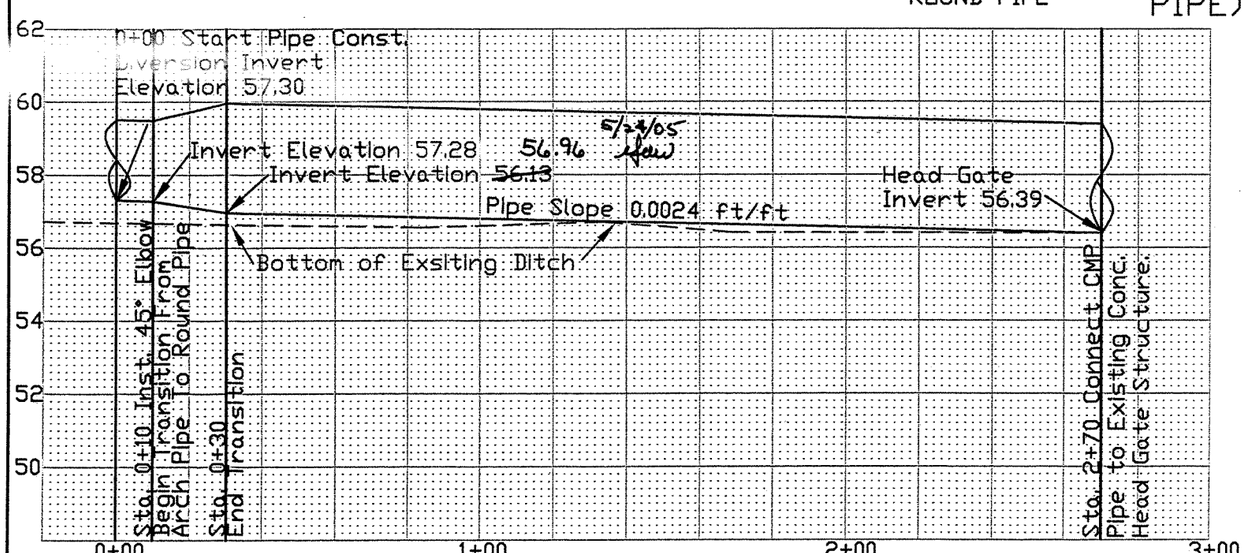

5 0 5

FILL VOLUME
DITCH BACKFILL - 290 CY

NOTES

1. FILL THE ANNULAR SPACE BETWEEN THE CMP AND THE SHEET PILING WITH EXPANDING URETHANE FOAM.
2. BOLT A CANAL GATE TO THE PIPE AT 4 POINTS AND THE FRAME AT TWO POINTS NEAR THE TOP OF THE GATE FRAME. USE 1/2" BOLTS. FOUR NUTS WILL BE NEEDED TO ATTACH THE FRAME TO THE SHEET PILING.
3. COMPACT THE BACKFILL BETWEEN AND AROUND THE CMP'S WITH TWO PASSES OVER THE ENTIRE SURFACE WITH A VIBRATING PLATE COMPACTOR. LAYER THICKNESS BEFORE COMPACTING 6" MAXIMUM. BACKFILL MATERIAL TO CONTAIN NO ROCK GREATER THAN 2". COMPACT THE FILL TO THE MID POINT OF THE CMP.

REGISTERED PROFESSIONAL ENGINEER 11,450 OREGON DECEMBER 3, 1981 GARY A. WILSON

EXPIRES 6/30/2006

ASBUILT 11/15/05

		DATE
DESIGNED	G. WILSON	4/05
PLOTTED	04/20/05	
CHECKED		
APPROVED		

CUMMINGS DITCH DIVERSION PIPELINE PLAN AND PROFILE GRANT COUNTY, OREGON

GRANT SOIL & WATER CONSERVATION DISTRICT

CADFILE cummingsditch

SHEET 5 OF 7

PRE CAST CONCRETE BOX BOARD SUPPORT
ISOMETRIC VIEW

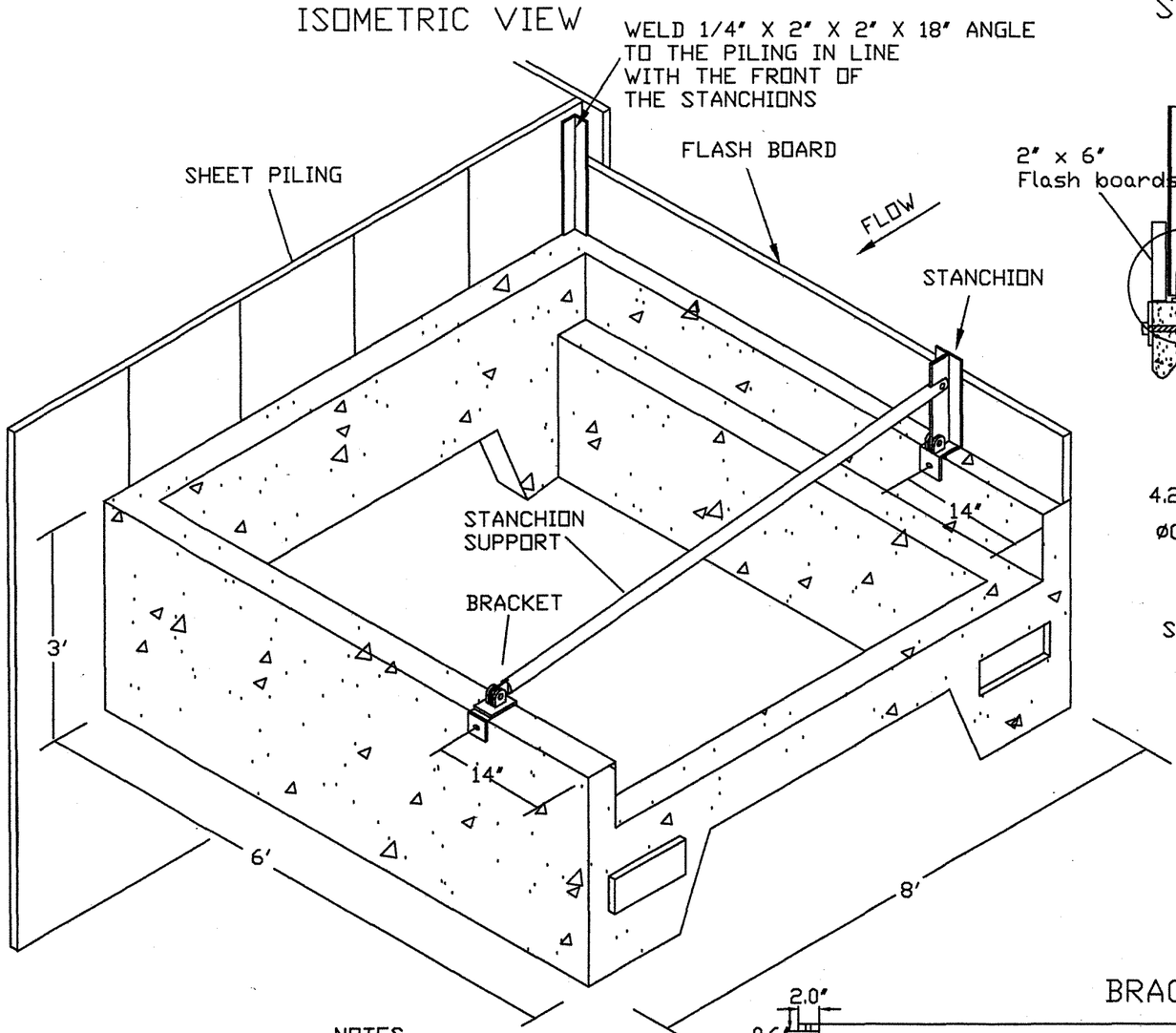

STANCHION HINGE

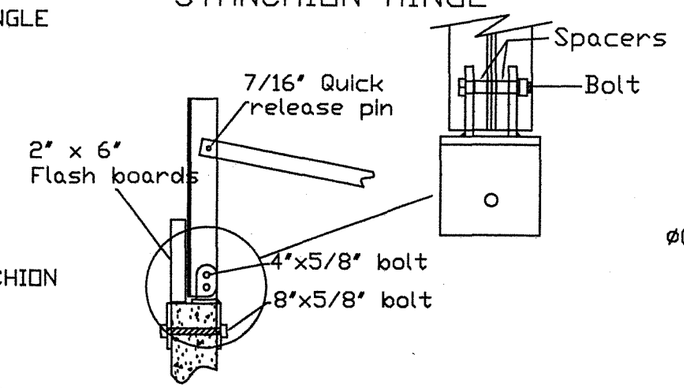

VERTICAL MEMBER

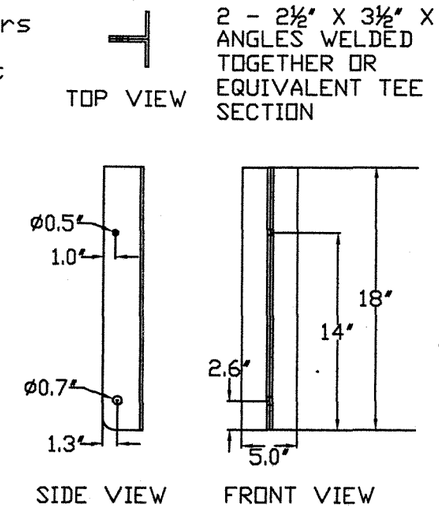

HINGE BRACKET

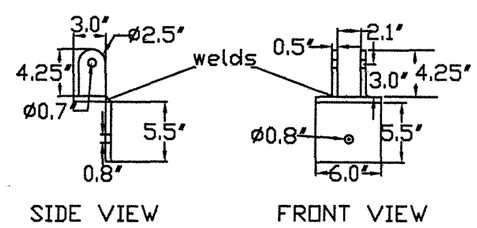

SPACERS

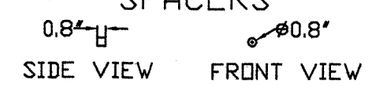

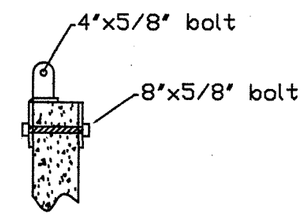

INSTALLATION DETAIL

WASHER

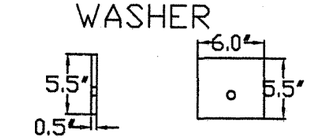

BRACE (2" IRON PIPE)

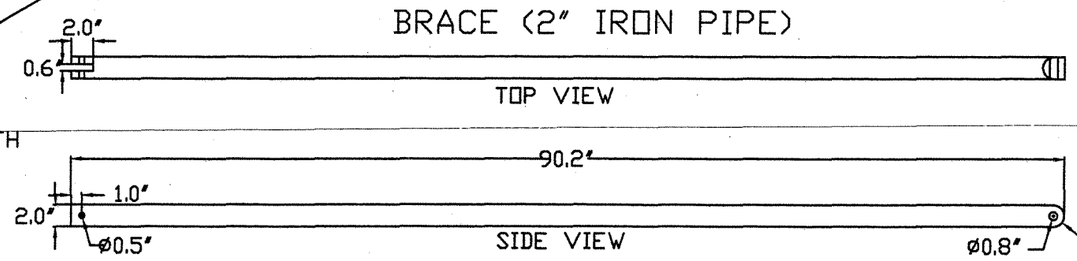

NOTES

1. WELD THE BRACKETS EVEN WITH THE BACK OF THE FRONT WALL AND EVEN WITH THE FRONT OF THE BACK WALL.
2. BOLT THE CONCRETE BOXES TOGETHER USING 3/4" BOLTS WITH WASHERS.
3. PLACE CONCRETE BOXES ON FILTER FABRIC.

REGISTERED PROFESSIONAL ENGINEER 11,450 OREGON DECEMBER 3, 1981 GARY A. WILSON

EXPIRES 6/30/2006

ASBUILT 11/15/05

		DATE
DESIGNED	G. WILSON	4/05
PLOTTED	4/20/05	
CHECKED		
APPROVED		

CUMMINGS DITCH DIVERSION
PRE CAST BOX & STANCHION ASSEMBLY DETAIL
GRANT COUNTY, OREGON

GRANT SOIL & WATER CONSERVATION DISTRICT

CADFILE cummingsditch

SHEET 6 OF 7

Construction Material To Be Provided By Owner

Item	Quantity Required		Remarks
Fabricated Items			
6x 8' Precast Concrete Boxes	2	Ea	
Stanchion Assemblies	2	Ea	Includes Vertical Member, Brace & 2 Hinge Assemblies
Trash Rack	0	Ea	
Flow Measurement Flume	1	Ea	
Bolts, Nuts & Washers			
3/4" x 18" all thread	2	Ea	Used to Join Concrete Boxes
3/4" Nuts	4	Ea	" " " "
3/4" Flat Washers	4	Ea	" " " "
3/4"Lock Washers	4	Ea	" " " "
5/8" x 8" Bolts	4	Ea	Used to Attach Stanchion Brackets To Conc Box
5/8" Nuts	4	Ea	" " " "
5/8" Flat Washers	8	Ea	" " " "
5/8" Lock Washers	4	Ea	" " " "
5/8" x 4" Bolts	4	Ea	Used to attach Stanchion & Brace to Hinge Bracket
5/8" Nuts	4	Ea	" " " "
5/8" Flat Washers	8	Ea	" " " "
5/8" Lock Washers	4	Ea	" " " "
CMP Pipe & Fittings			
36" ROUND PIPE	240	LF	Outfall Pipe Connecting Diversion Structure to Delivery Ditch
27"x44" ARCH PIPE	10	LF	" " " "
36" TRANSITION FROM ROUND TO ARCH PIPE	20	LF	" " " "
45 DEG ELBOW - 27"x44" ARCH PIPE	1	Ea	" " " "
HEADGATE FOR 27"x44" ARCH PIPE	1	Ea	" " " "
Steel Parts			
1/4" x 2" x 2" x 18" angle pieces	2	Ea	Flash Board Support Vertical End Pieces
5/16"x 3-1/2" x 6" Angle (Top Cap)	47.5	LF	Contractor to Cut to Length (Bid Item #3)
Sheet Piling (19-1/2" width)	1063	LF	Contractor to Cut to Length (Bid Item #3)
Miscellaneous			
Premix Concrete	20	Bags	Used to Fill Void Between Sheet Pile & Conc Box & To Connect 36' CMP Pipe to Existing Headgate
Filter Fabric	50	SY	To be Placed Under Concrete Boxes

CONSTRUCTION BID ITEMS

Item No.	Item	Amount	Unit of Measure
#1	MOBILIZATION AND DEMOBILIZATION	All Reqd	Lump Sum
#2	SITE CLEARING, ENVIRONMENTAL PROTECTION AND CLEANUP	All Reqd	Lump Sum
#3	CUT STEEL SHEET PILING	All Reqd	Lump Sum
#4	GENERAL EXCAVATION	295.00	Cubic Yard
#5	INSTALL INTERLOCKING STEEL SHEET PILING	1,063	Linear Foot
#6	INSTALL CONCRETE BOXES	All Reqd	Lump Sum
#7	INSTALL STANCHION ASSEMBLIES	All Reqd	Lump Sum
#8	FURNISH AND INSTALL 24" MINUS RIP-RAP	193.00	Cubic Yard
#9	INSTALL 36" CMP PIPE (CIRCULAR & ARCH)	270.00	Linear Foot
#10	PIPE BACKFILL	290.00	Cubic Yard
#11	CONNECT 36" CMP PIPE TO EXISTING CONCRETE HEADGATE	All Reqd	Lump Sum
#12	INSTALL HEADGATE/TRASH RACK ASSEMBLY	All Reqd	Lump Sum
#13	INSTALL FLOW MEASUREMENT FLUME	All Reqd	Lump Sum

AS BUILT 11/15/05

REGISTERED PROFESSIONAL ENGINEER 11,450 OREGON DECEMBER 3, 1981 GARY A. WILSON

EXPIRES 6/30/2006

DATE 4/05
DESIGNED G. WILSON
PLOTTED 4/20/05
CHECKED
APPROVED

CUMMINGS DITCH DIVERSION
MATERIAL INVENTORY SHEET
GRANT COUNTY, OREGON

GRANT SOIL & WATER CONSERVATION DISTRICT

CADFILE cummingsditch

SHEET 7 OF 7

SITE PLAN VIEW

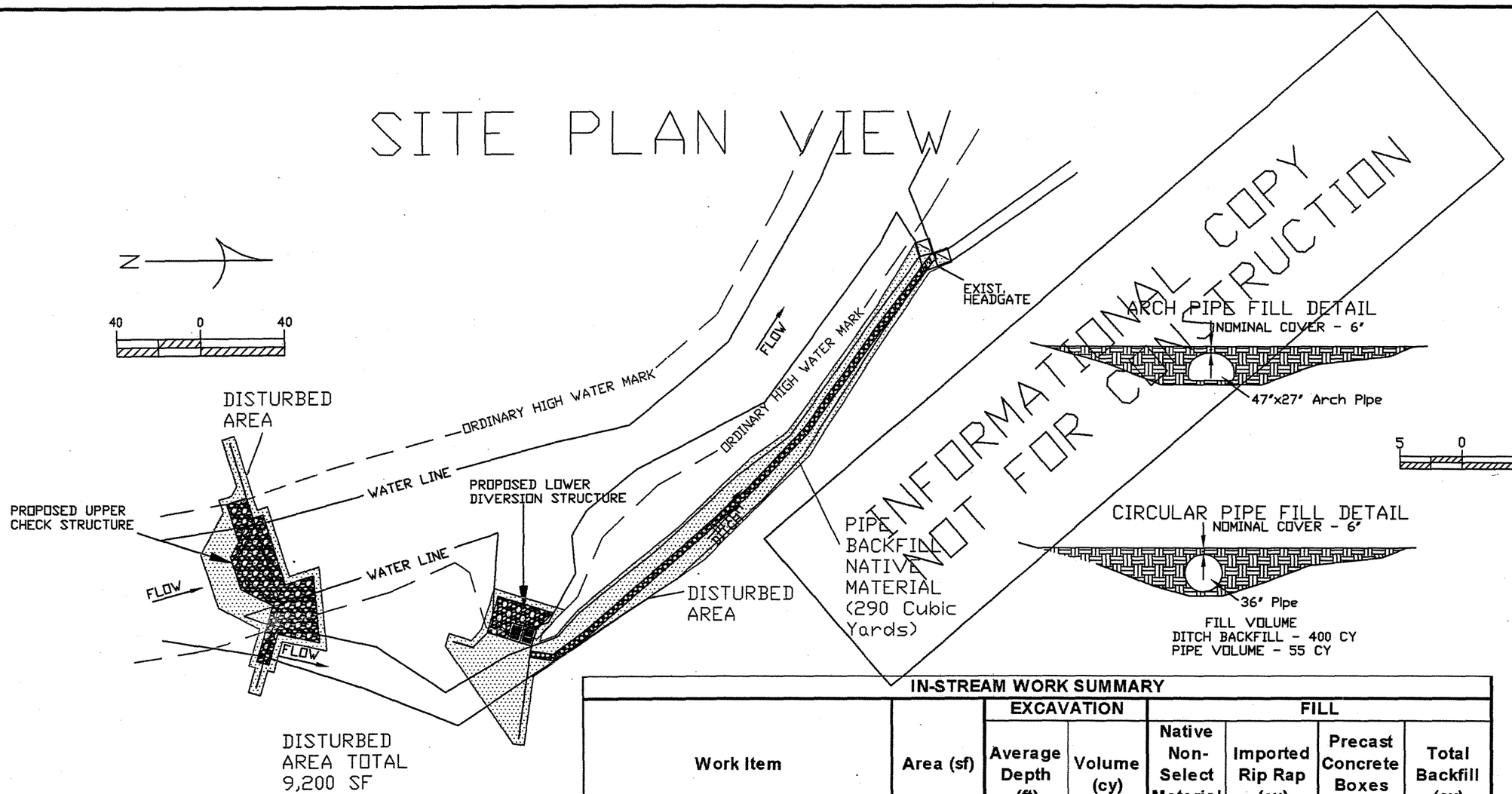

NOTES

1. PROJECT STAGING AREA LOCATED ON UPLAND GROUND ADJACENT TO ACCESS ROAD APPROXIMATELY 100' WEST OF CONSTRUCTION SITE.
2. TOTAL AREA OF DISTURBANCE BELOW ORDINARY HIGH WATER MARK 9,200 SQUARE FEET
3. ALL DISTURBED MATERIAL SHALL BE RESHAPED TO BLEND WITH NEW STRUCURE.
4. 193 CUBIC YARDS OF LARGE ROCK WILL BE IMPORTED TO STABILIZE NEW STRUCTURE.

IN-STREAM WORK SUMMARY

Work Item	Area (sf)	EXCAVATION Average Depth (ft)	EXCAVATION Volume (cy)	FILL Native Non-Select Material (cy)	FILL Imported Rip Rap (cy)	FILL Precast Concrete Boxes (cy)	FILL Total Backfill (cy)
UPPER CHECK STRUCTURE							
Remove Existing Push-Up Dam	250	2	19				0
Large Rock Stabilization	1370	3.5	178		152		152
LOWER DIVERSION STRUCTURE							
Remove Existing Push-Up Dam	275	1	10				0
Large Rock Stabilization	325	3.5	42		36		36
Precast Concrete Structures	96	3.5	12		5	6	11
Shaping Above Lower Diversion	150	2	11				0
DITCH WORK/PIPE INSTALLATION	4350	0.14	23	290			290
DISTURBED AREA NOT INCLUDED IN THE ABOVE WORK ITEMS	2384	0	0	0	0	0	0
		Total Excavation	295			Total Fill	489

DATE 2/05
DESIGNED G. WILSON
PLOTTED
CHECKED
APPROVED

CUMMINGS DITCH DIVERSION
FILL/REMOVAL PERMIT DETAIL
GRANT COUNTY, OREGON

GRANT SOIL & WATER CONSERVATION DISTRICT

CADFILE cummingsditch

SHEET P1

CONSTRUCTION STAGING DETAIL

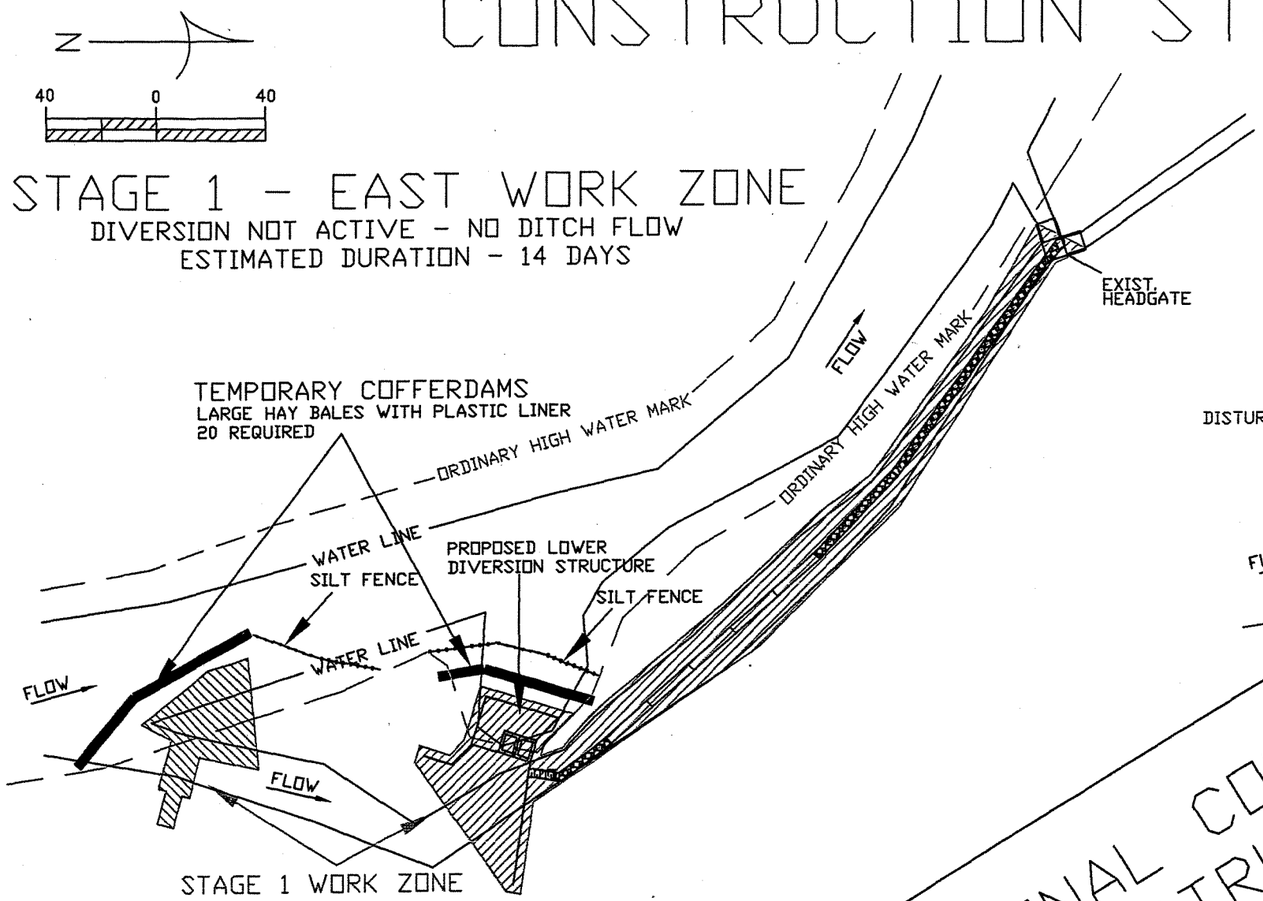

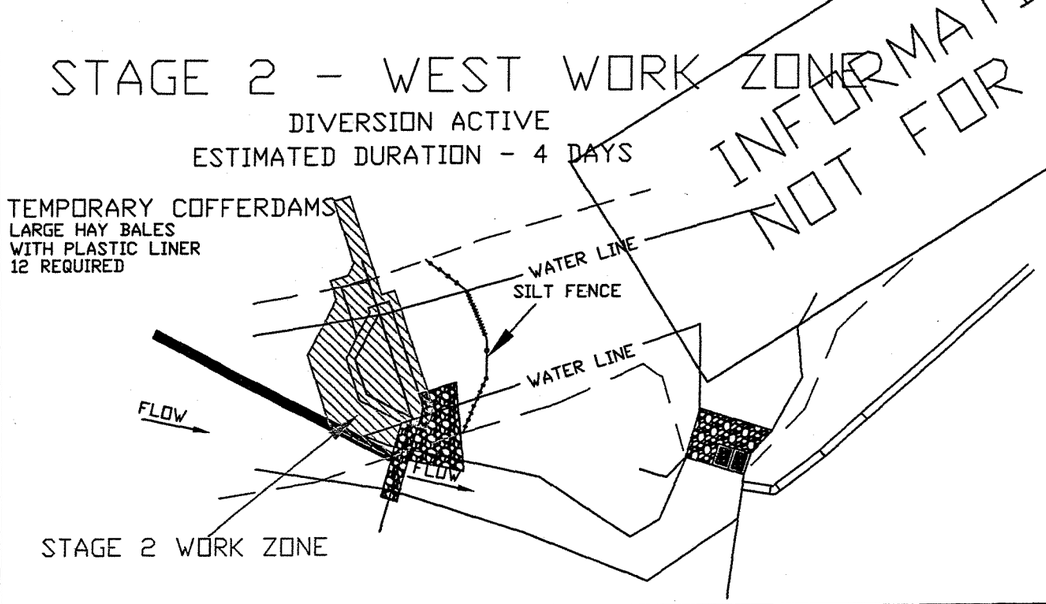

STAGE 3
CLEANUP - RESTORATION

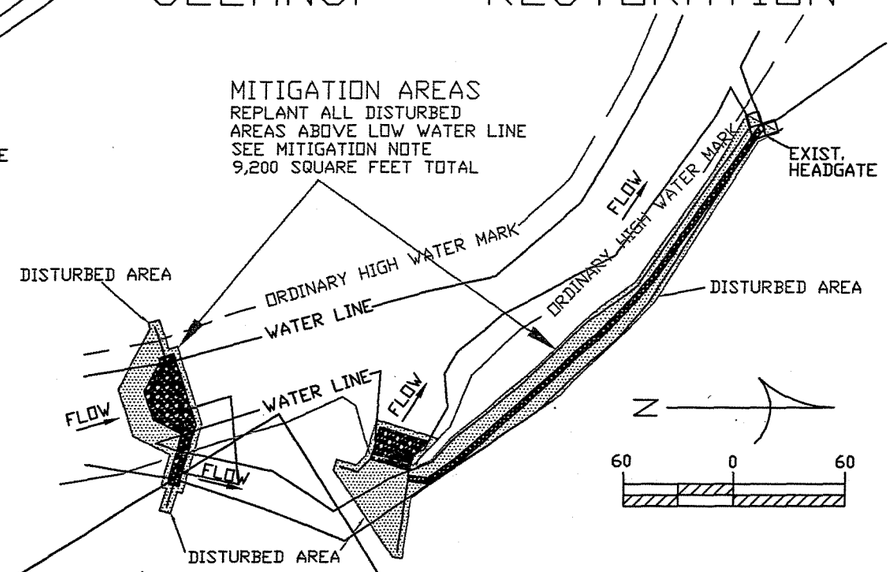

INFORMATIONAL COPY
NOT FOR CONSTRUCTION

MITIGATION NOTE

Vegetative riprap will be used in the areas around the structure that require hardening to mitigate riparian function. Rock will be limited in its reach up the bank, allowing for soil to be placed over the rock, completing the bank reconstruction. This will allow vegetation to reestablish over the rock structure. Soil will also be placed in the voids between the rock riprap down to the ordinary high water mark. Local plant cuttings will be harvested and placed in the void areas during the fall dormant season. Willow, cottonwood, and dogwood will be used. Disturbed bank areas will be shaped to original condition and broadcast seeded to grass species as recommended by local NRCS office to help facilitate site stabilization. Large boulders will also be placed in the channel to create roughness and pool habitat that will address cover, complexity, and diversity mitigation.

DATE	2/05
DESIGNED	G. WILSON
PLOTTED	
CHECKED	
APPROVED	

CUMMINGS DITCH DIVERSION
FILL/REMOVAL PERMIT DETAIL
GRANT COUNTY, OREGON

GRANT SOIL & WATER CONSERVATION DISTRICT

CADFILE
cummingsditch

SHEET P2

CONSTRUCTION SECTION DETAIL SHEET

NOT TO SCALE

TYPICAL SETION OF CHANNEL WORK

UPSTREAM CHECK STRUCTURE - CENTER OF CHANNEL

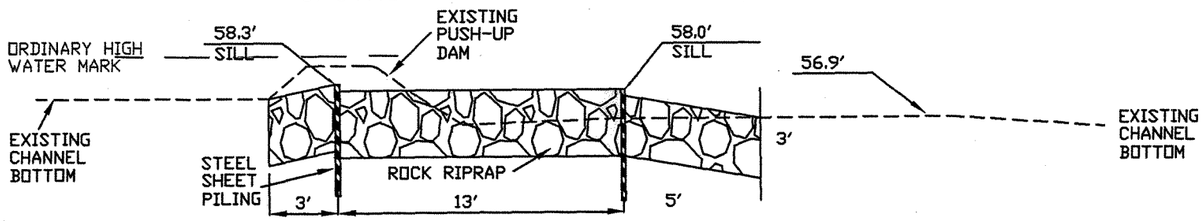

TEMPORARY COFFERDAM

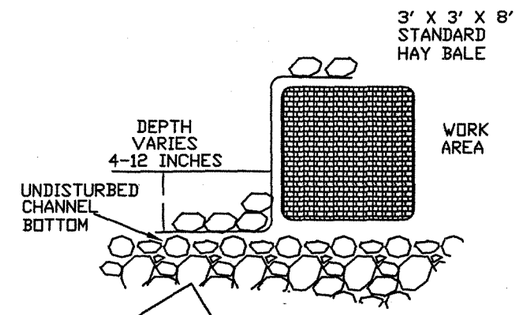

TYPICAL SETION OF CHANNEL WORK

LOWER DIVERSION STRUCTURE - THROUGH THE PRECAST CONCRETE BLOCKS

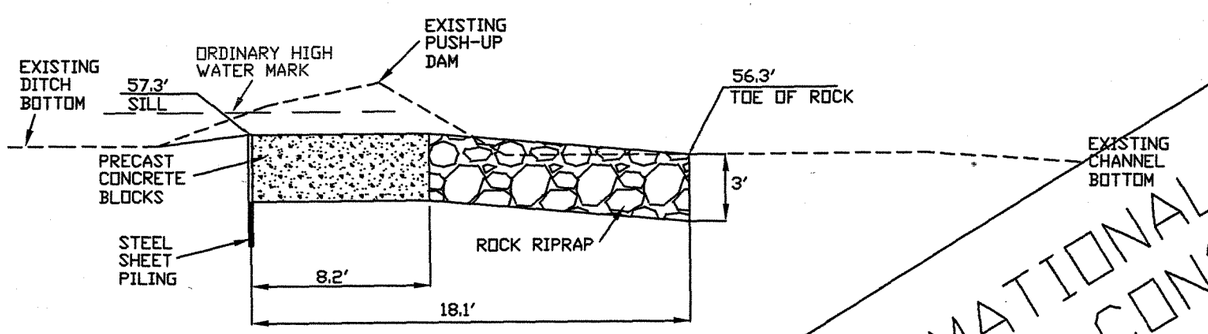

INFORMATIONAL COPY
NOT FOR CONSTRUCTION

DATE 2/05
DESIGNED G. WILSON
PLOTTED
CHECKED
APPROVED

CUMMINGS DITCH DIVERSION
FILL/REMOVAL PERMIT DETAIL
GRANT COUNTY, OREGON

GRANT SOIL & WATER CONSERVATION DISTRICT

CADFILE
cummingsditch

SHEET P3

LOCATION MAP

GRAPHIC SCALE

2000 0 1000 2000 4000 6000

(IN FEET)

Township 13S
Range 26E
Section 12 NENE

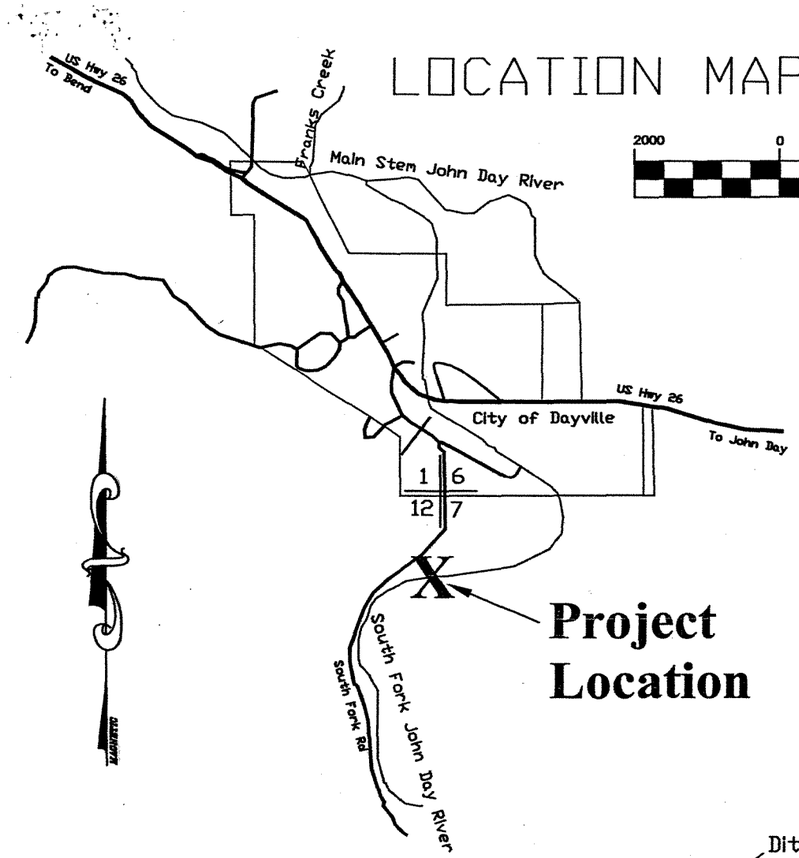

Note
Dam position and alignment will be marked before construction.
Elevetion references will also be provided.

SITE PLAN VIEW

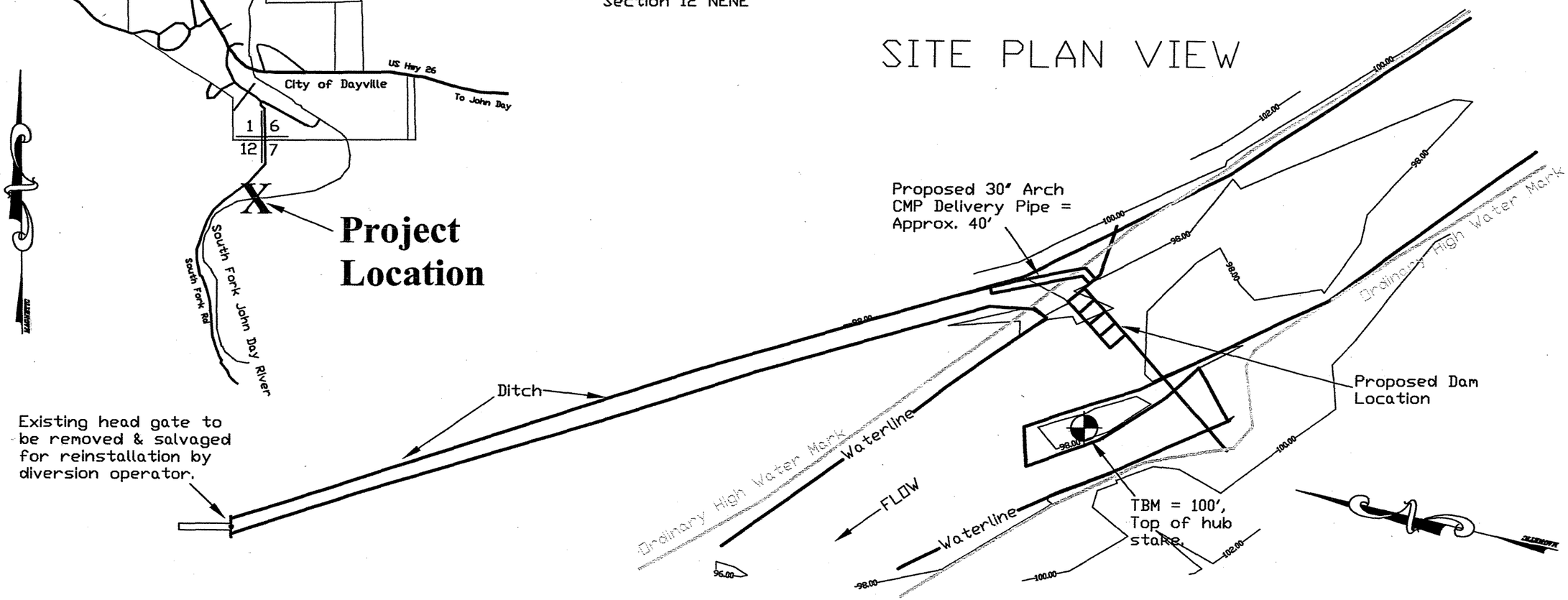

GRAPHIC SCALE

40' 20' 0 20' 40' 160'

(IN FEET)

REGISTERED PROFESSIONAL ENGINEER 11,450 OREGON DECEMBER 3, 1981 GARY A. WILSON

EXPIRES 6/30/2006

ASBUILT 11/15/05

Grant Soil & Water Conservation District	
DRAWN BY: J. Kehrberg	DATE: 4/20/05
CHECKED BY: G. Wilson	DRAWING NO.: #1
JOB NO.: G. Gregg	SHEET 1 OF 6

SECTION B-B

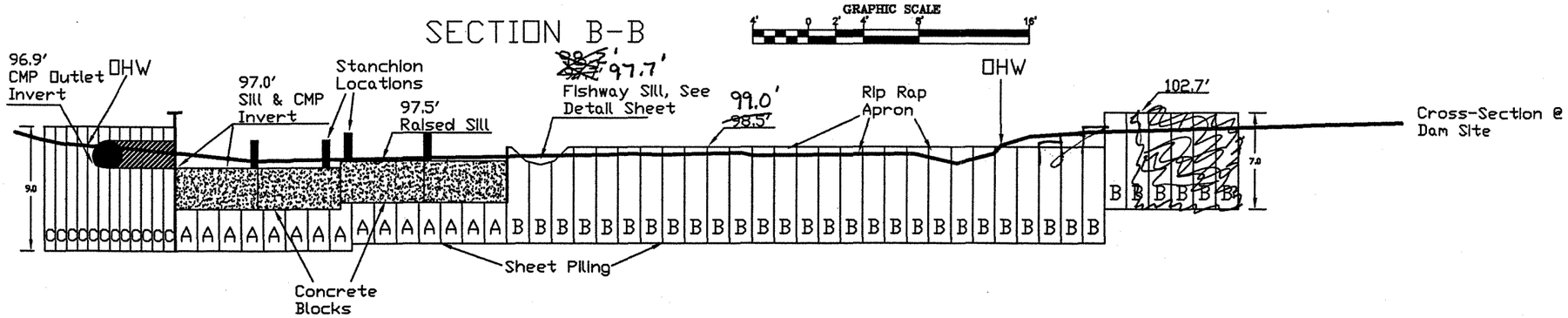

SECTION A-A

SECTION C-C

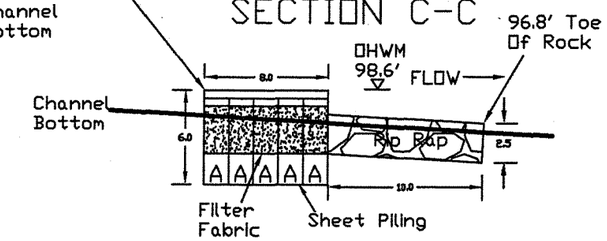

NOTE
Shape/Grade culvert back fill & bank reconstruction area to match existing adjacent terrain.

DAM PLAN VIEW

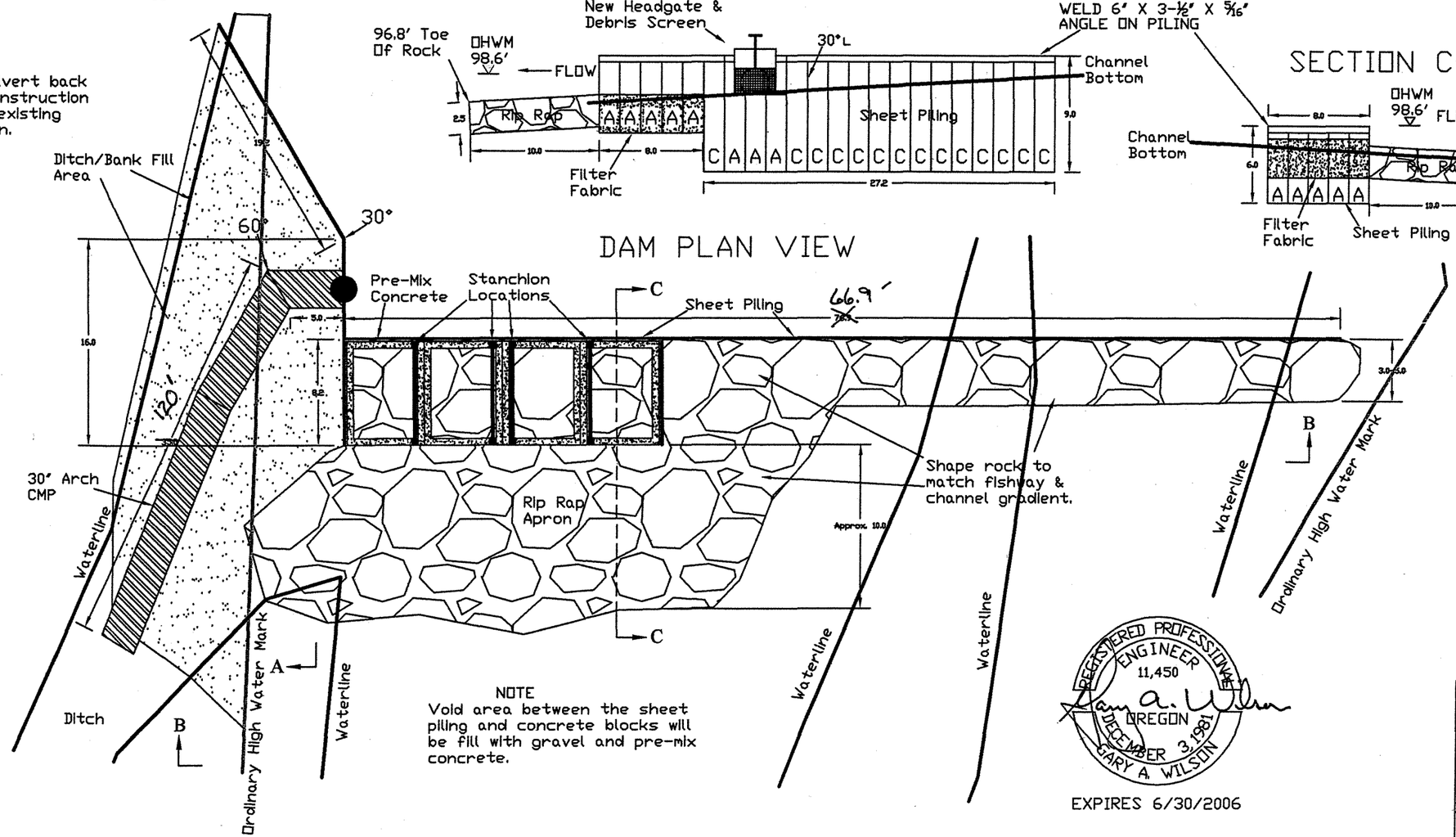

NOTE
Void area between the sheet piling and concrete blocks will be fill with gravel and pre-mix concrete.

SHEET PILE CUT SCHEDULE

	LENGTH	# REQUIRED
A	6' 0"	28 Each
B	7' 0"	33 Each
C	9' 0"	14 Each

REGISTERED PROFESSIONAL ENGINEER 11,450 OREGON DECEMBER 3, 1981 GARY A. WILSON

EXPIRES 6/30/2006

ASBUILT 11/15/05 [illegible]
Revised 4/25/05

Grant Soil & Water Conservation District	
DRAWN BY: J. Kehrberg	DATE: 4/20/05
CHECKED BY: G. Wilson	DRAWING NO.: #2
JOB NO.: G. Gregg	SHEET 2 OF 6

CONCRETE BOX AND STANCHION DETAIL

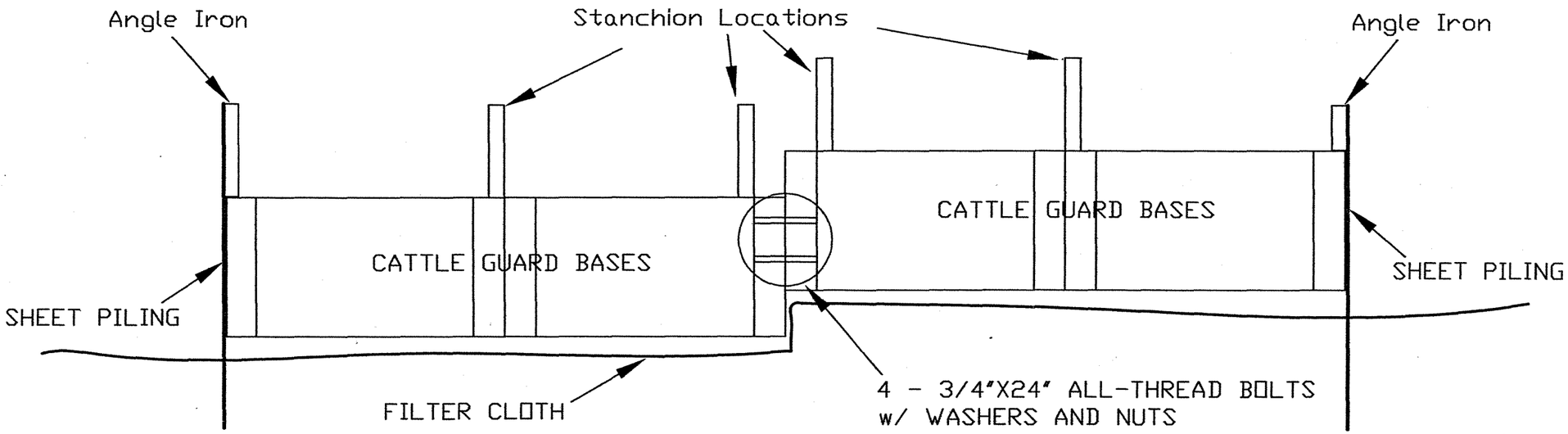

NOTE: HOLES TO BE DRILLED ON SITE AFTER CONCRETE BOXES HAVE BEEN INSTALLED AT GRADE.

SHEET PILING DETAIL

NOTE: WELD ANGLE IRON CAP TO TOP OF ALL INSTALLED SHEET PILING EXCEPT SHEET PILING THAT IS DRIVEN ACCROSS STREAM CHANNEL.

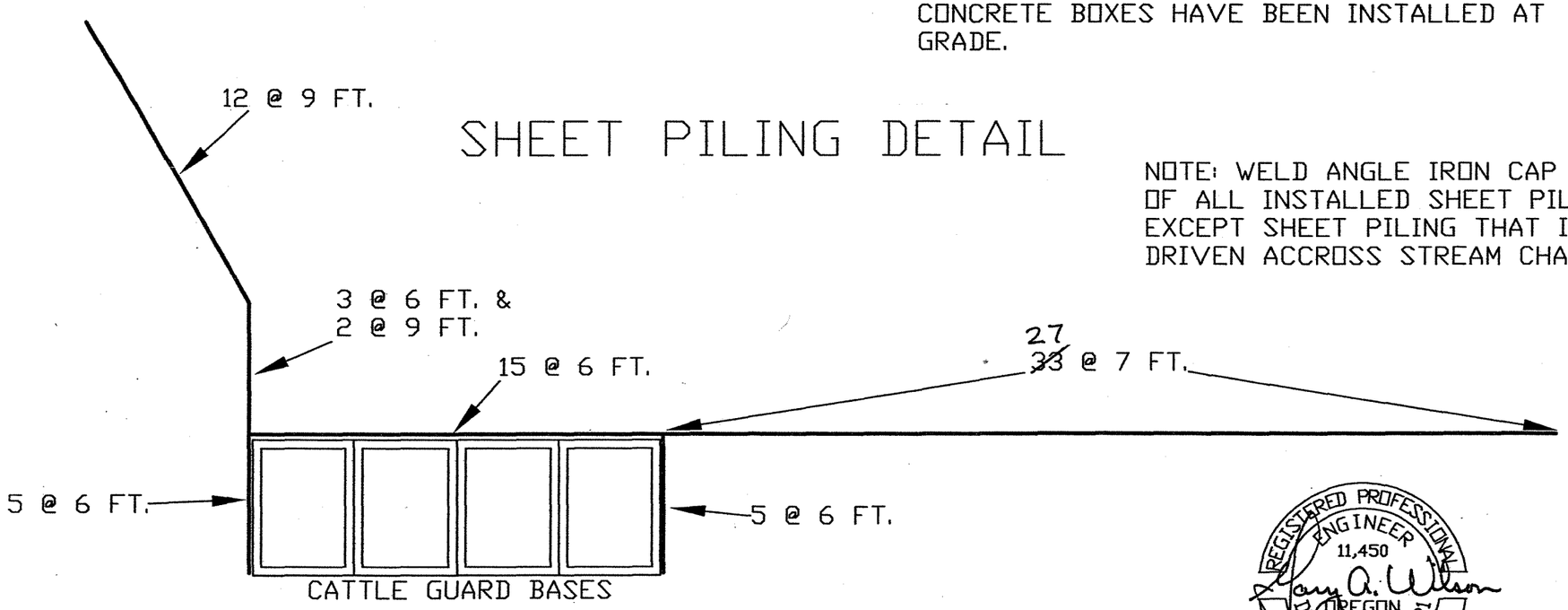

REGISTERED PROFESSIONAL ENGINEER
11,450
OREGON
DECEMBER 3, 1981
GARY A. WILSON

EXPIRES 6/30/2006

ASBUILT 11/15/05

Grant Soil & Water Conservation District	
DRAWN BY: J. Kehrberg	DATE: 4/20/05
CHECKED BY: G. Wilson	DRAWING NO.: #5
JOB NO.: G. Gregg	SHEET 3 OF 6

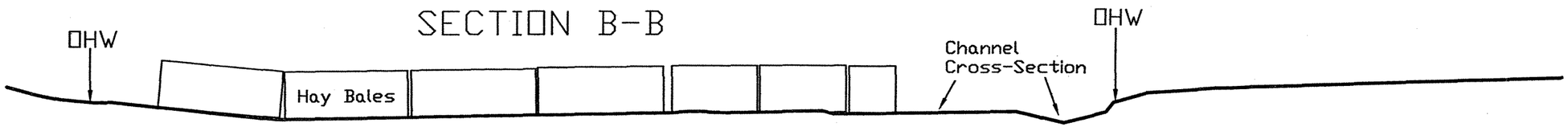

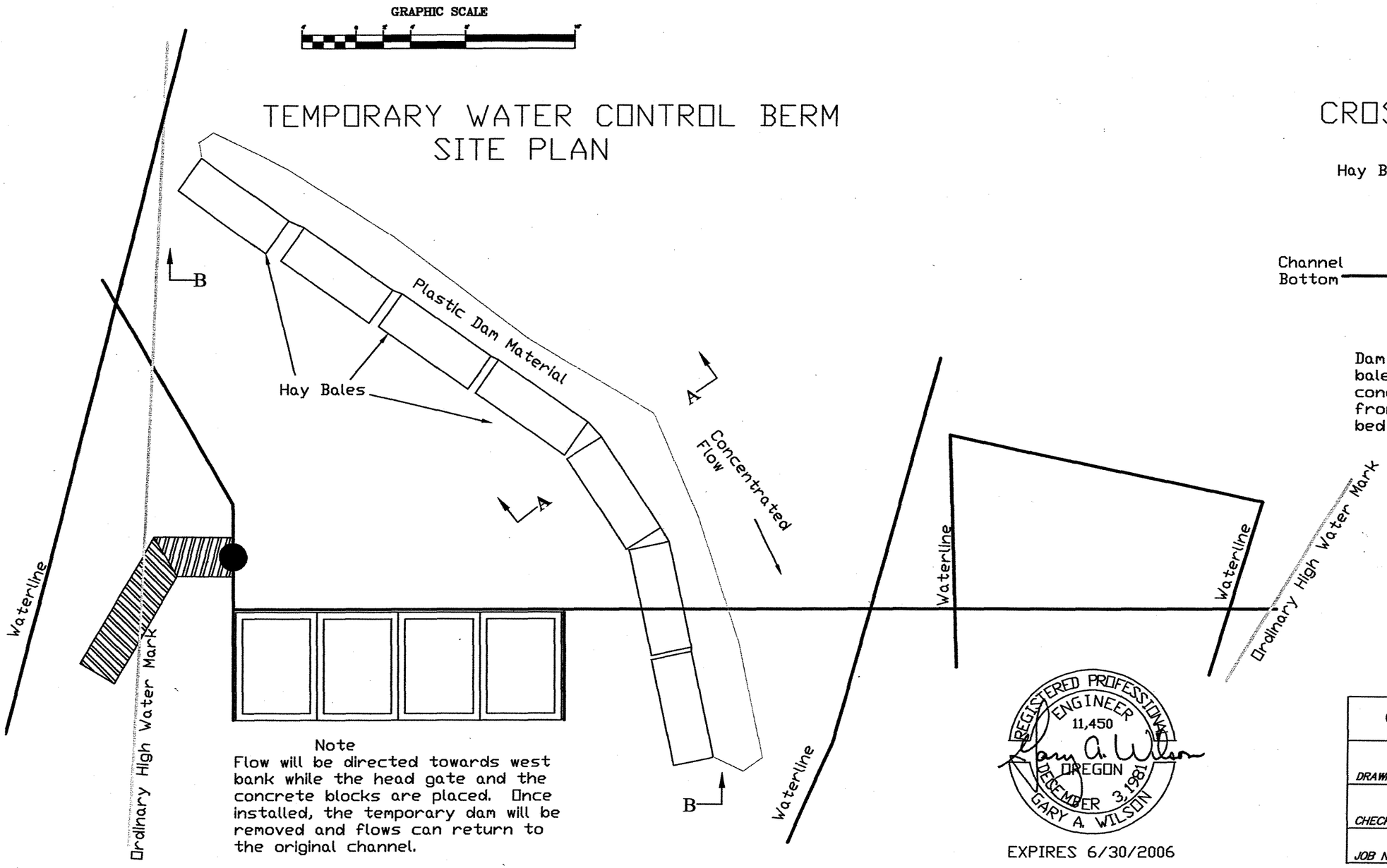

Note
Flow will be directed towards west bank while the head gate and the concrete blocks are placed. Once installed, the temporary dam will be removed and flows can return to the original channel.

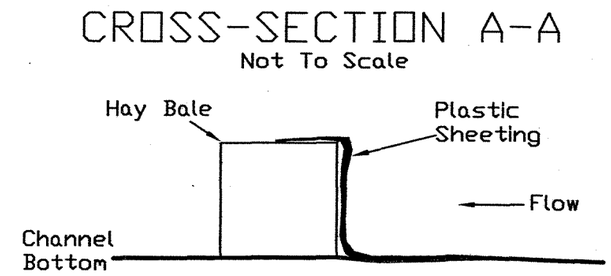

Note
Dam will be constructed with 3'X3'X8' hay bales and plastic sheeting. Dam will concentrate the main stream flow away from the construction area. No stream bed disturbance is anticipate.

REGISTERED PROFESSIONAL ENGINEER 11,450 OREGON DECEMBER 3, 1981 GARY A. WILSON

EXPIRES 6/30/2006

ASBUILT 11/15/05

Grant Soil & Water Conservation District	
DRAWN BY: J. Kehrberg	DATE: 4/20/05
CHECKED BY: G. Wilson	DRAWING NO.: #4
JOB NO.: G. Gregg	SHEET 4 OF 6

PRE CAST CONCRETE BOX BOARD SUPPORT
ISOMETRIC VIEW

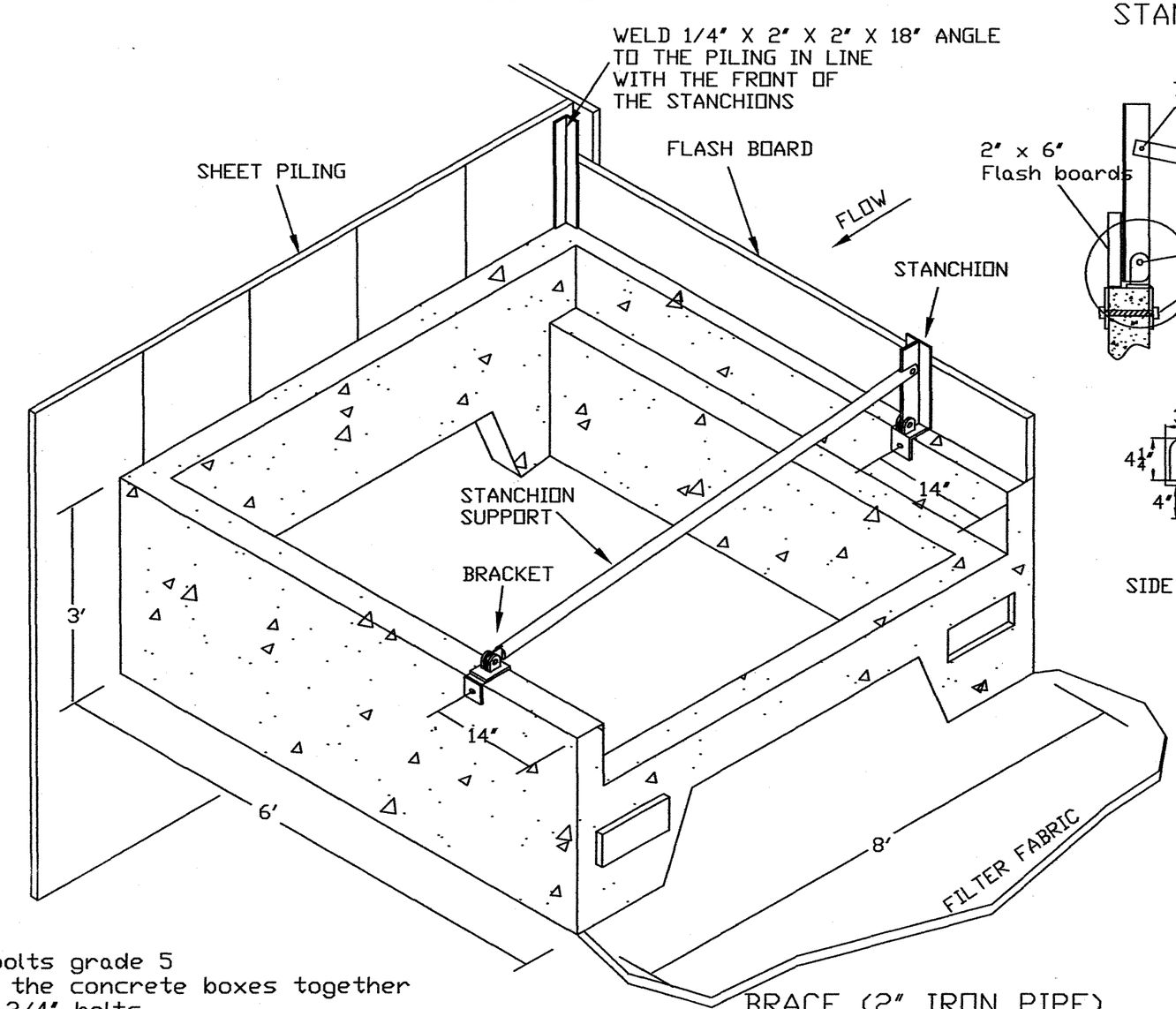

STANCHION HINGE

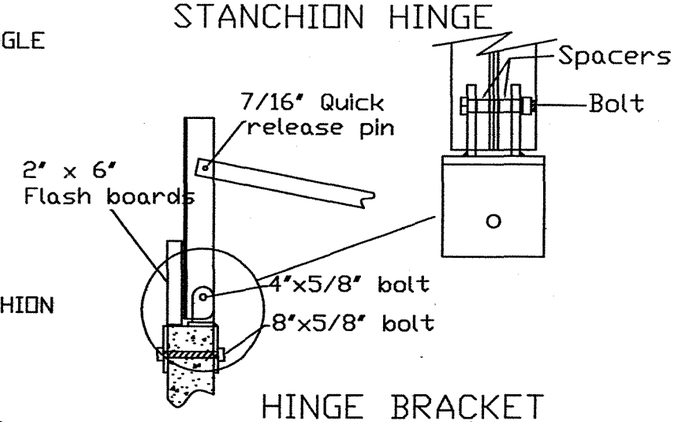

HINGE BRACKET

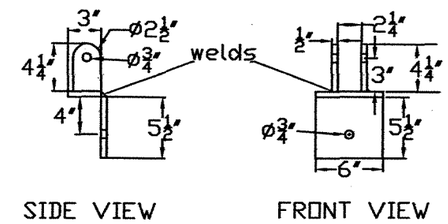

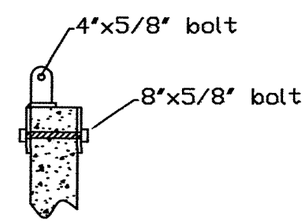

INSTALLATION DETAIL

VERTICAL MEMBER

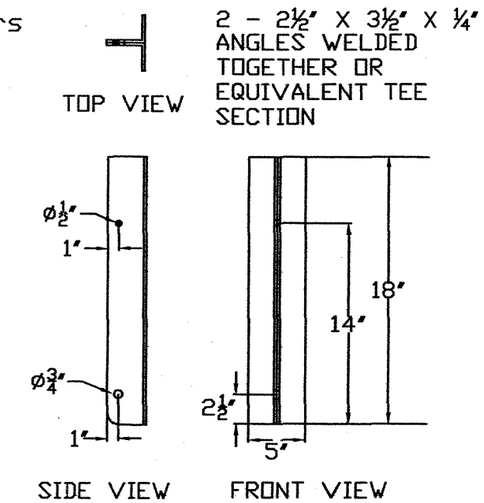

SPACERS

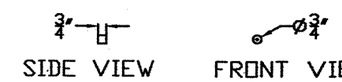

WASHER

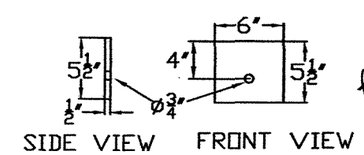

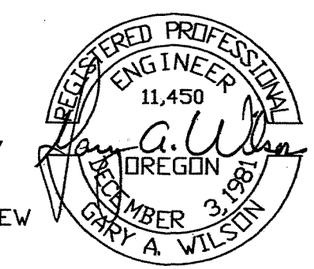

EXPIRES 6/30/2006

NOTES:
- All bolts grade 5
- Bolt the concrete boxes together with 3/4" bolts.
- Place boxes on filter fabric

BRACE (2" IRON PIPE)

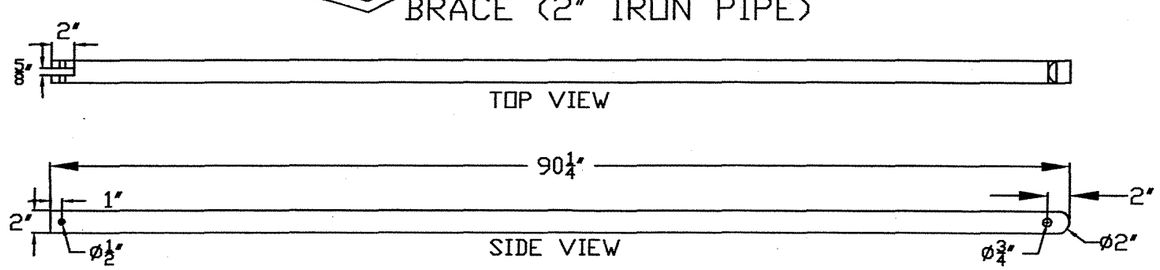

ASBUILT 11/15/05

Grant Soil & Water Conservation District	
DRAWN BY: J. Kehrberg	DATE: 4/20/05
CHECKED BY: G. Wilson	DRAWING NO.: #5
JOB NO.: G. Gregg	SHEET 5 OF 6

FISH PASSAGE SILL DETAIL

Note To Scale

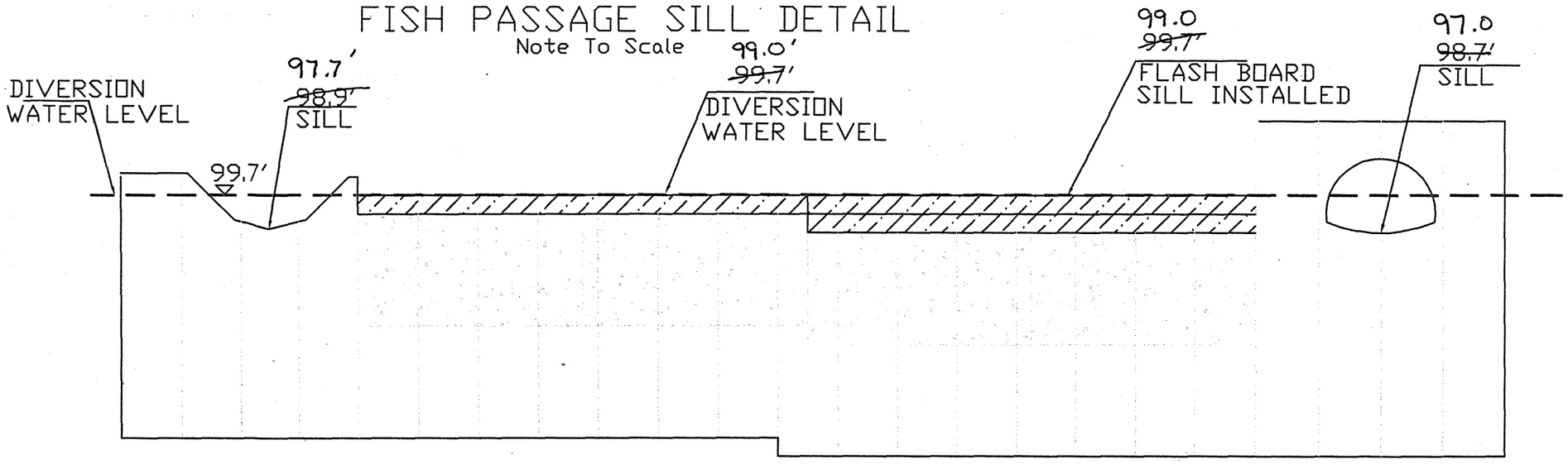

FISH PASSAGE NOTCH DETAIL

Note To Scale

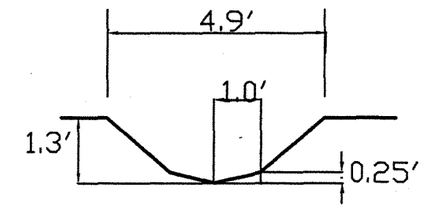

FISH PASSAGE FLOW			
FLOW DEPTH	WS ELEV.	FLOW	VELOCITY
0.8 FT	98.5~~99.7~~ FT	4.3 CFS	2.5 FPS
1.3 FT	99.0~~100.0~~ FT	12.8 CFS	3.3 FPS

FISH PASSAGE OUTFALL DETAIL

Note To Scale

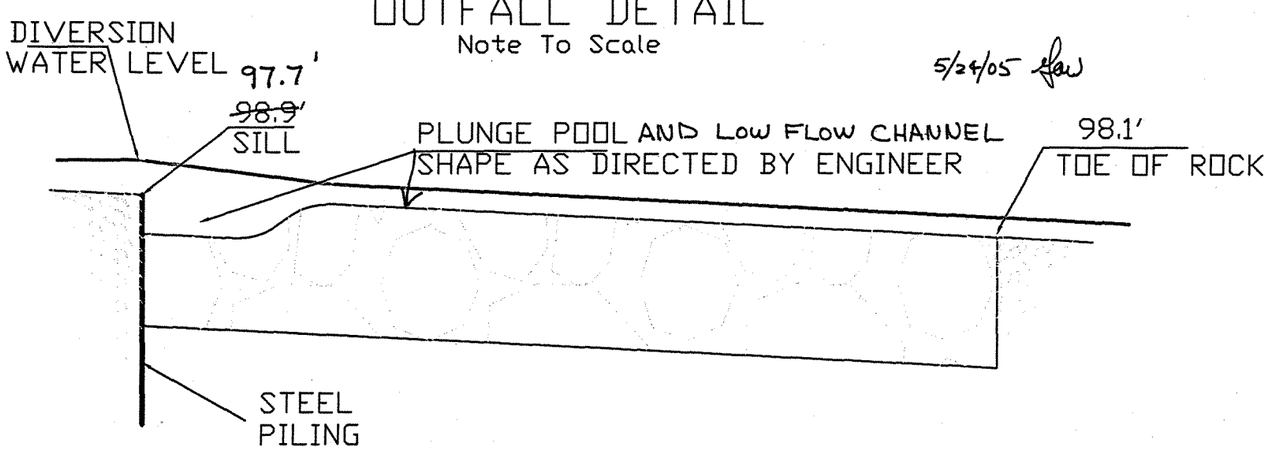

REGISTERED PROFESSIONAL ENGINEER 11,450 OREGON DECEMBER 3, 1981 GARY A. WILSON

EXPIRES 6/30/2006

ASBUILT 11/15/05 GW

Grant Soil & Water Conservation District	
DRAWN BY: J. Kehrberg	DATE: 4/20/05
CHECKED BY: G. Wilson	DRAWING NO.: #6
JOB NO.: G. Gregg	SHEET 6 OF 6

LOCATION MAP

GRAPHIC SCALE

2000 0 1000 2000 4000 6000

(IN FEET)

Township 13S
Range 32E
Section 13 NWSW

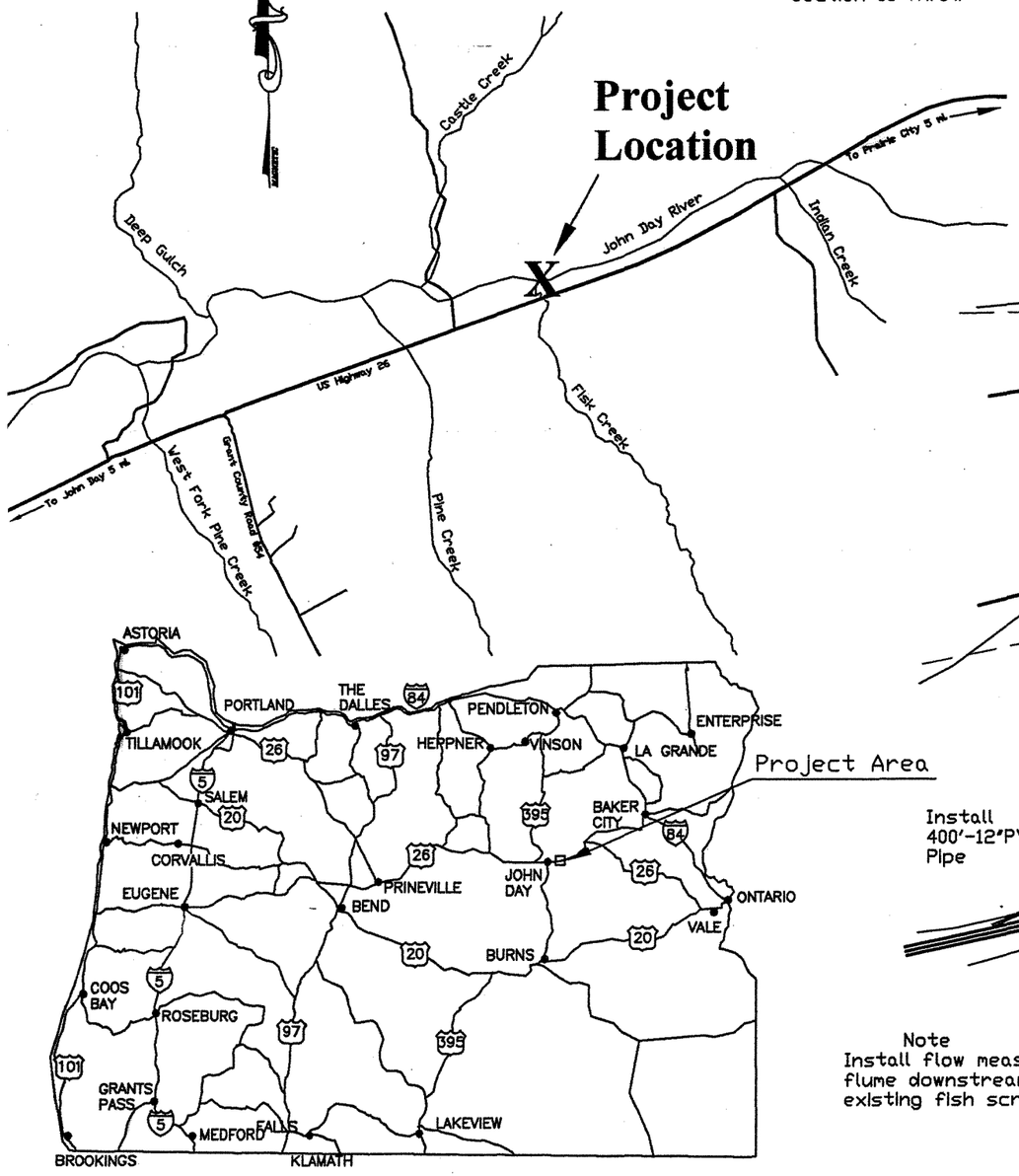

SITE PLAN VIEW

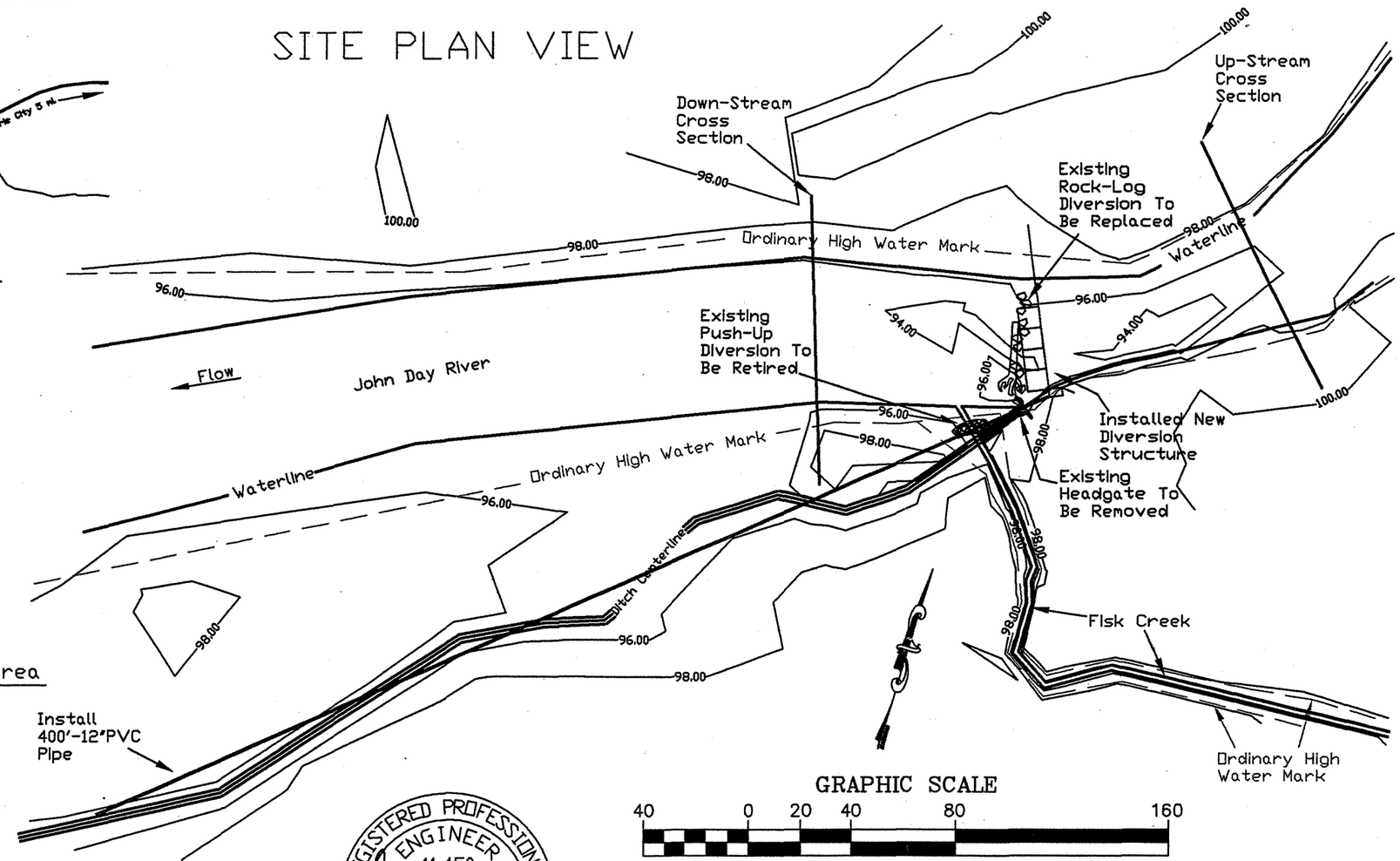

GRAPHIC SCALE

40 0 20 40 80 160

(IN FEET)

Note
Install flow measuring flume downstream from existing fish screen.

REGISTERED PROFESSIONAL ENGINEER
11,450
OREGON
DECEMBER 3, 1981
GARY A. WILSON

EXPIRES 6/30/2006

Plotted 5/17/05 AS BUILT 12/6/05 JK

Grant Soil & Water Conservation District	
DRAWN BY: J. Kehrberg	DATE: 4/26/05
CHECKED BY: G. Wilson	DRAWING NO.: #1
JOB NO.: Holliday Diversion	SHEET 1 OF 9

RIVER DIVERSION PLAN VIEW

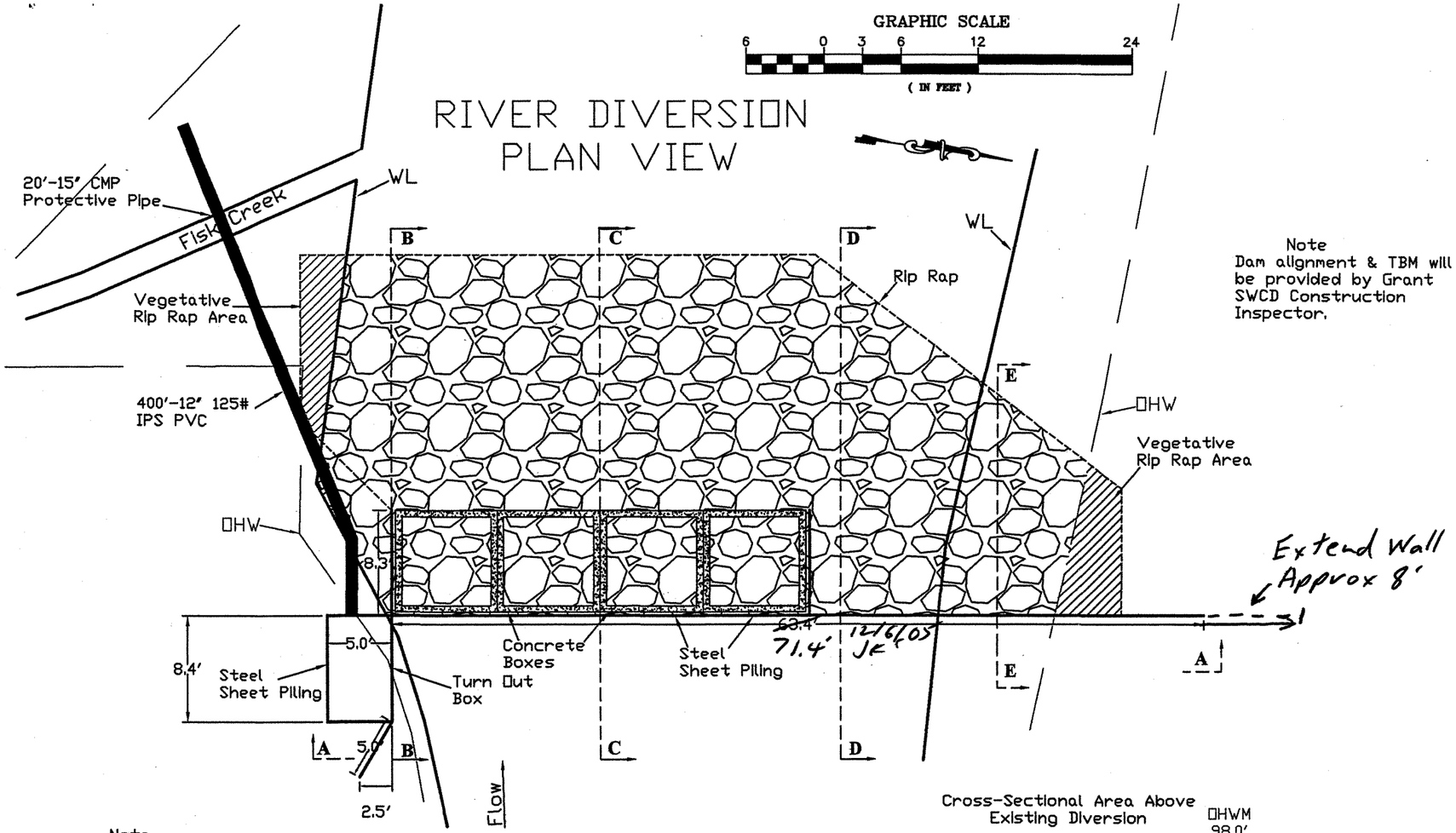

Note
Dam alignment & TBM will be provided by Grant SWCD Construction Inspector.

Note
1. Sheet piling will be driven or vibrated into proper position and elevation. No excavation will be allowed unless approved by the engineer.
2. Backfill concrete boxes with rip rap rock. Install rip rap apron to match existing stream gradient. Shape the channel and plunge pool below the fish passage opening as directed by the engineer to concentrate low flows, allowing for fish to move past the structure.

SECTION B-B

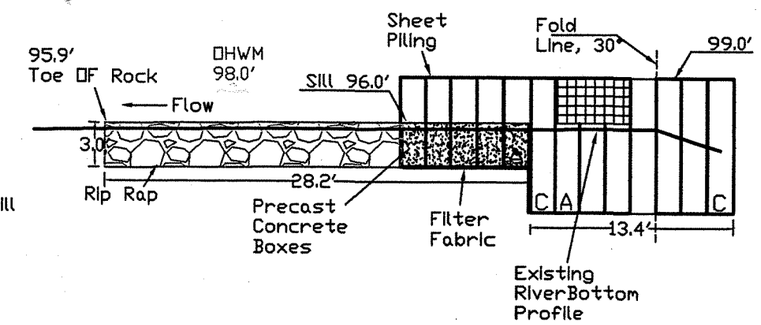

SECTION C-C

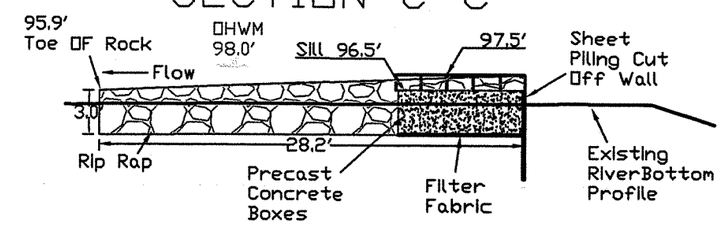

SECTION D-D

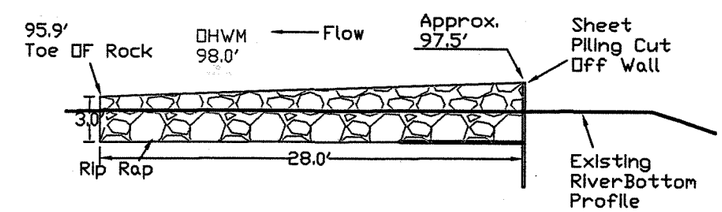

SECTION E-E

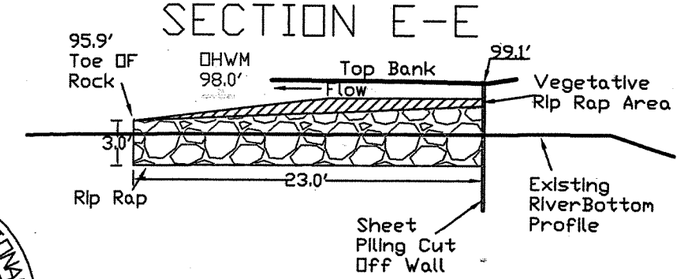

Cross-Sectional Area Above Existing Diversion

Proposed Cross-Sectional Area Through New Structure

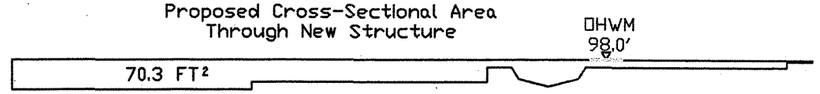

SECTION A-A

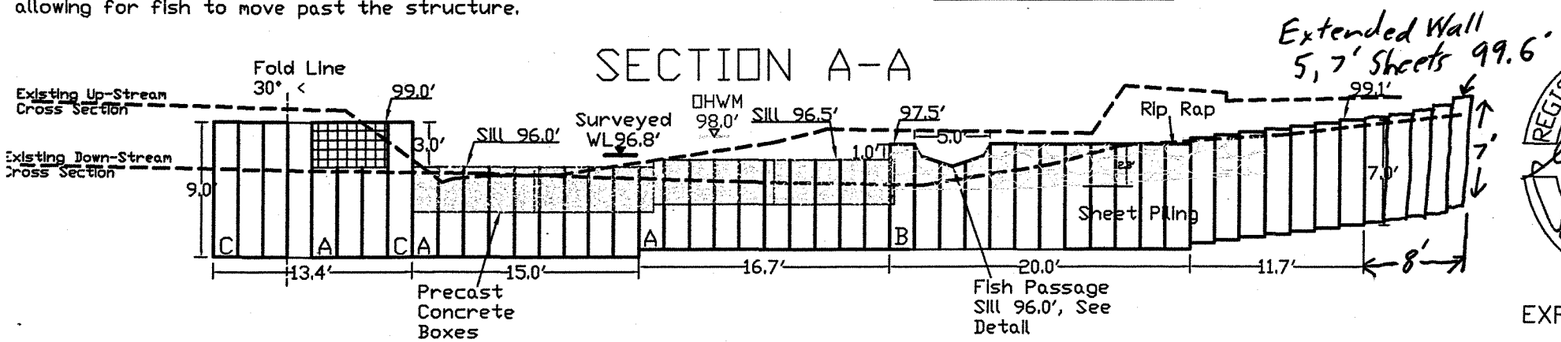

REGISTERED PROFESSIONAL ENGINEER 11,450 OREGON DECEMBER 3, 1981 GARY A. WILSON

Gary A. Wilson

EXPIRES 6/30/2006

Plotted 5/17/05 AS BUILT 12/6/05 JK

Grant Soil & Water Conservation District	
DRAWN BY: J. Kehrberg	DATE: 4/26/05
CHECKED BY: G. Wilson	DRAWING NO.: #2
JOB NO.: Holliday Diversion	SHEET 2 OF 9

FISK CREEK PIPLINE AVERAGE FILL DETAIL, SECTION B-B

Not To Scale

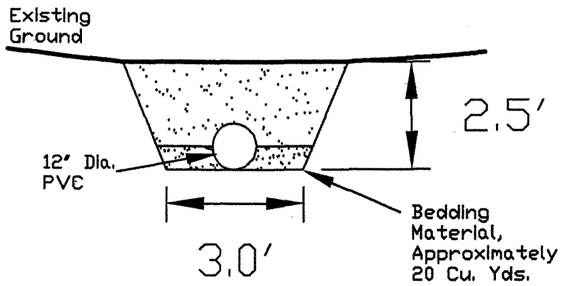

Note
Delivery pipe installation will require approximately 80 cubic yards of excavation and backfill.

NOTES

1. Install pipe according to Natural Resource Conservation Service Specification 430DD, Irrigation Water Conveyance, High Pressure Underground, Plastic.
2. Pipeline to fallow the lines and grades shown on the plans and staked in the field. Reference Sheet #7. Supplied bedding material to support pipe evenly in trench to prevent grade reversals during back fill.
3. Campact the backfill with two passes over the entire surface with a vibratory plate compactor or method approved by engineer. Maximum layer thickness before compacting is 6". The moisture content of the fill material is to be such that no layers form between lifts or does not flow under the action of compactor.
4. Shape the pipeline crossing at Fisk Creek to match pre-existing contours.

FISK CREEK/PIPELINE CROSSING PLAN VIEW

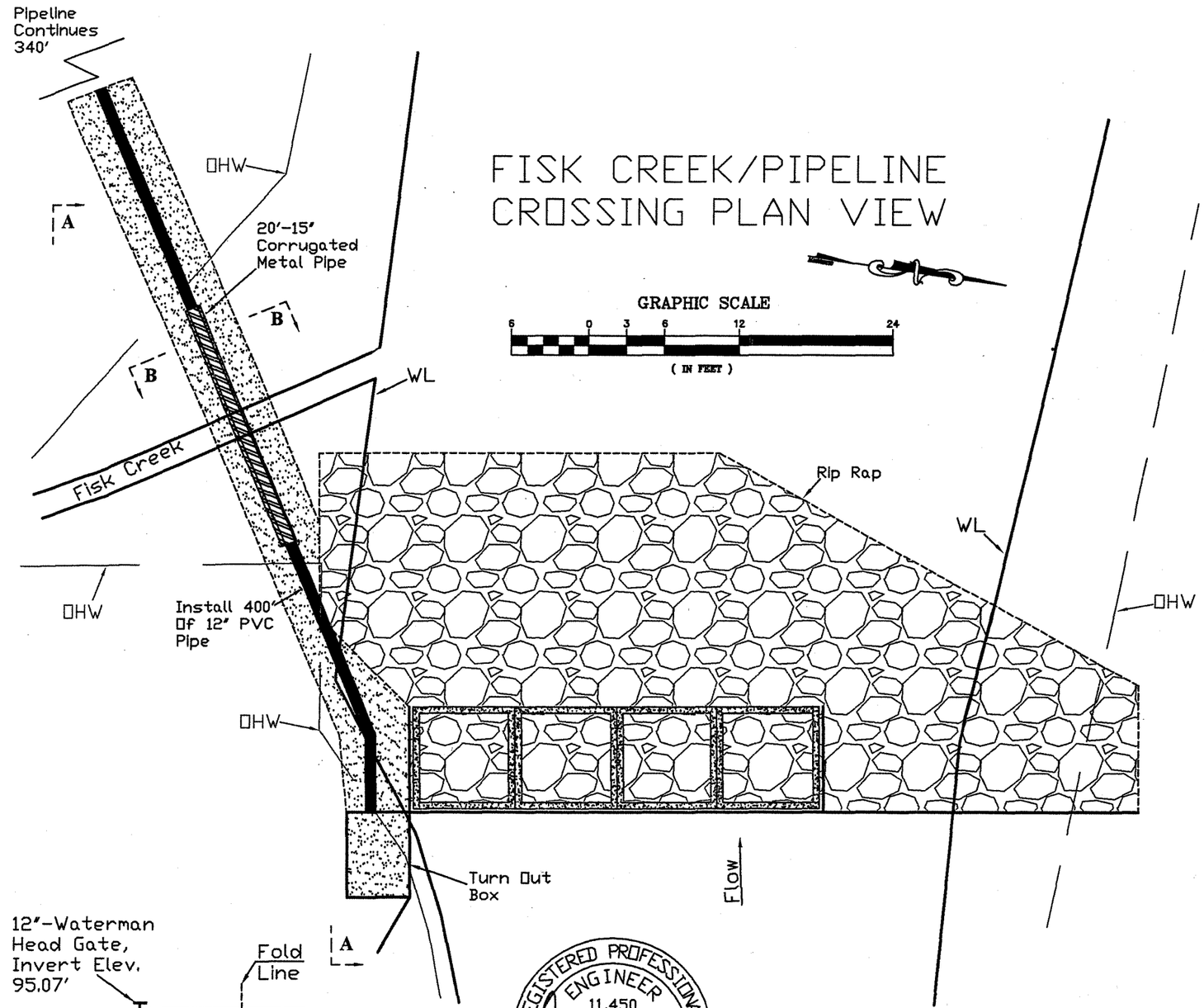

Note
Pipeline outlet will be protected by placing a 10'-15" CMP over the exposed PVC. Rodent guard will be attached to the 15" CMP.

FISK CREEK/PIPELINE CROSSING FILL PROFILE, SECTION A-A

Not To Scale

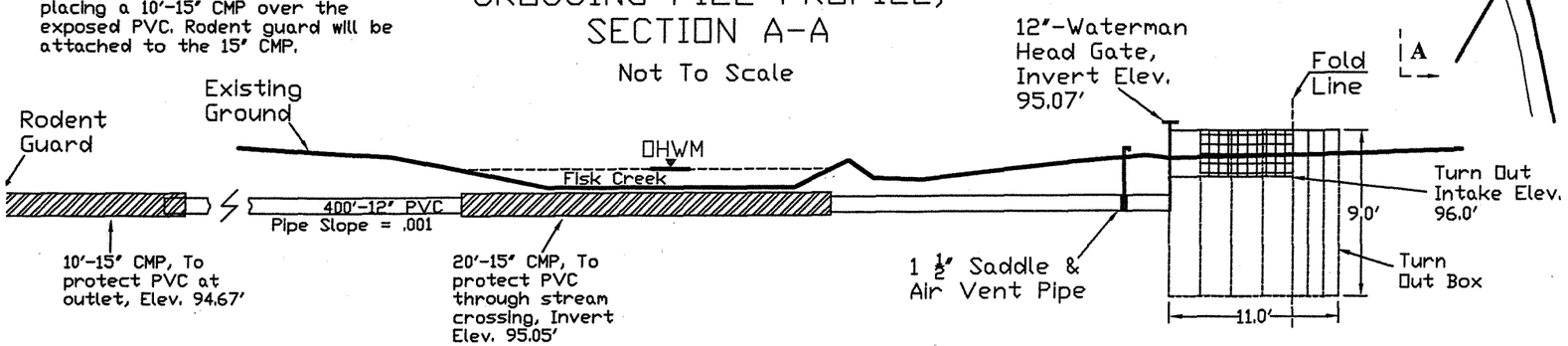

REGISTERED PROFESSIONAL ENGINEER 11,450 OREGON DECEMBER 3, 1981 GARY A. WILSON

EXPIRES 6/30/2006

Plotted 5/17/05 AS BUILT 12/6/05 JK

Grant Soil & Water Conservation District	
DRAWN BY: J. Kehrberg	DATE: 4/26/05
CHECKED BY: G. Wilson	DRAWING NO.: #3
JOB NO.: Holliday Diversion	SHEET 3 OF 9

CONCRETE BOX AND STANCHION DETAIL

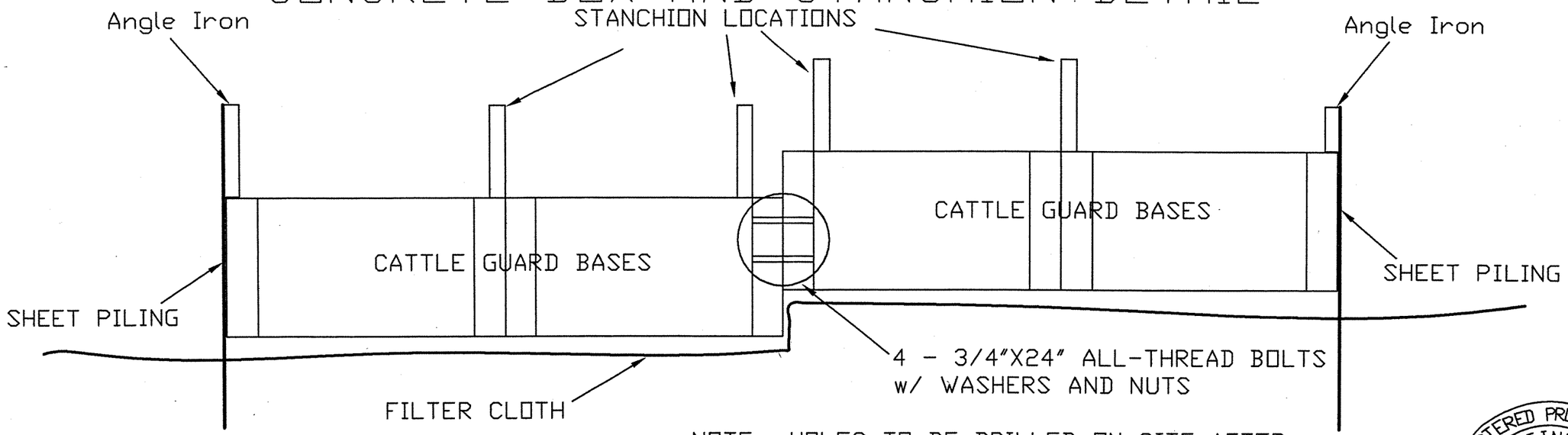

NOTE: HOLES TO BE DRILLED ON SITE AFTER CONCRETE BOXES HAVE BEEN INSTALLED AT GRADE.

REGISTERED PROFESSIONAL ENGINEER 11,450 OREGON DECEMBER 3, 1981 GARY A. WILSON

EXPIRES 6/30/2006

SHEET PILING DETAIL

NOTE: WELD ANGLE IRON CAP TO TOP OF ALL INSTALLED SHEET PILING EXCEPT SHEET PILING THAT IS DRIVEN ACCROSS STREAM CHANNEL.

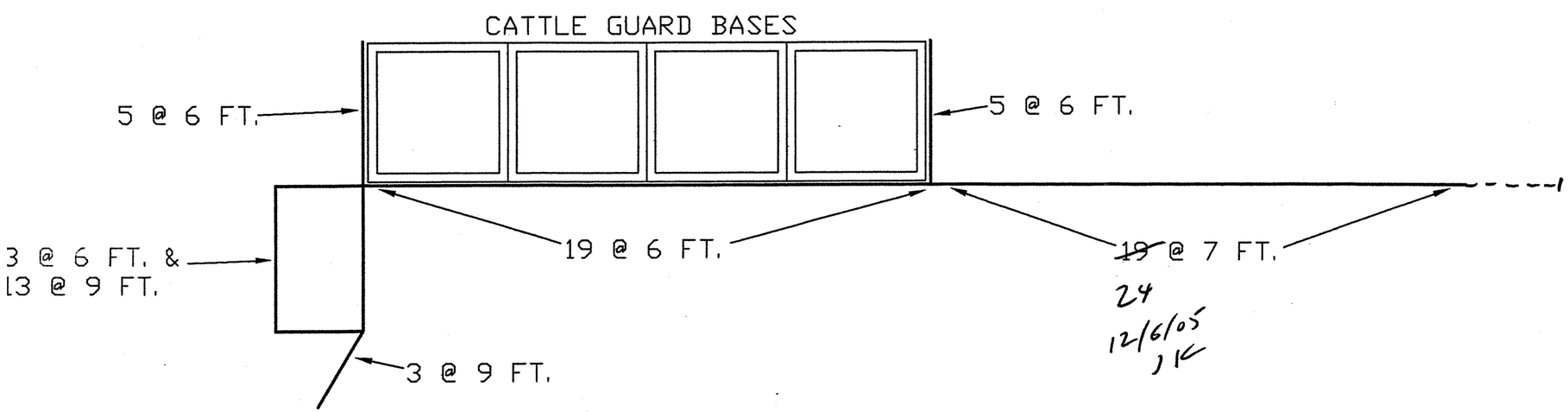

SHEET PILE PIECE CUT SCHEDULE

LENGTH	# REQUIRED
A 6' 0"	32 Each
B 7' 0"	~~24~~ ~~19~~ Each
C 9' 0"	16 Each
TOTAL LENGTH ~~469~~ LF	

504 JK ~~12/6/05~~ 12/6/05

Plotted 5/17/05 AS BUILT 12/6/05 JK

Grant Soil & Water Conservation District	
DRAWN BY: J. Kehrberg	DATE: 4/26/05
CHECKED BY: G. Wilson	DRAWING NO.: #4
JOB NO.: Holliday Diversion	SHEET 4 OF 9

PRE CAST CONCRETE BOX BOARD SUPPORT
ISOMETRIC VIEW

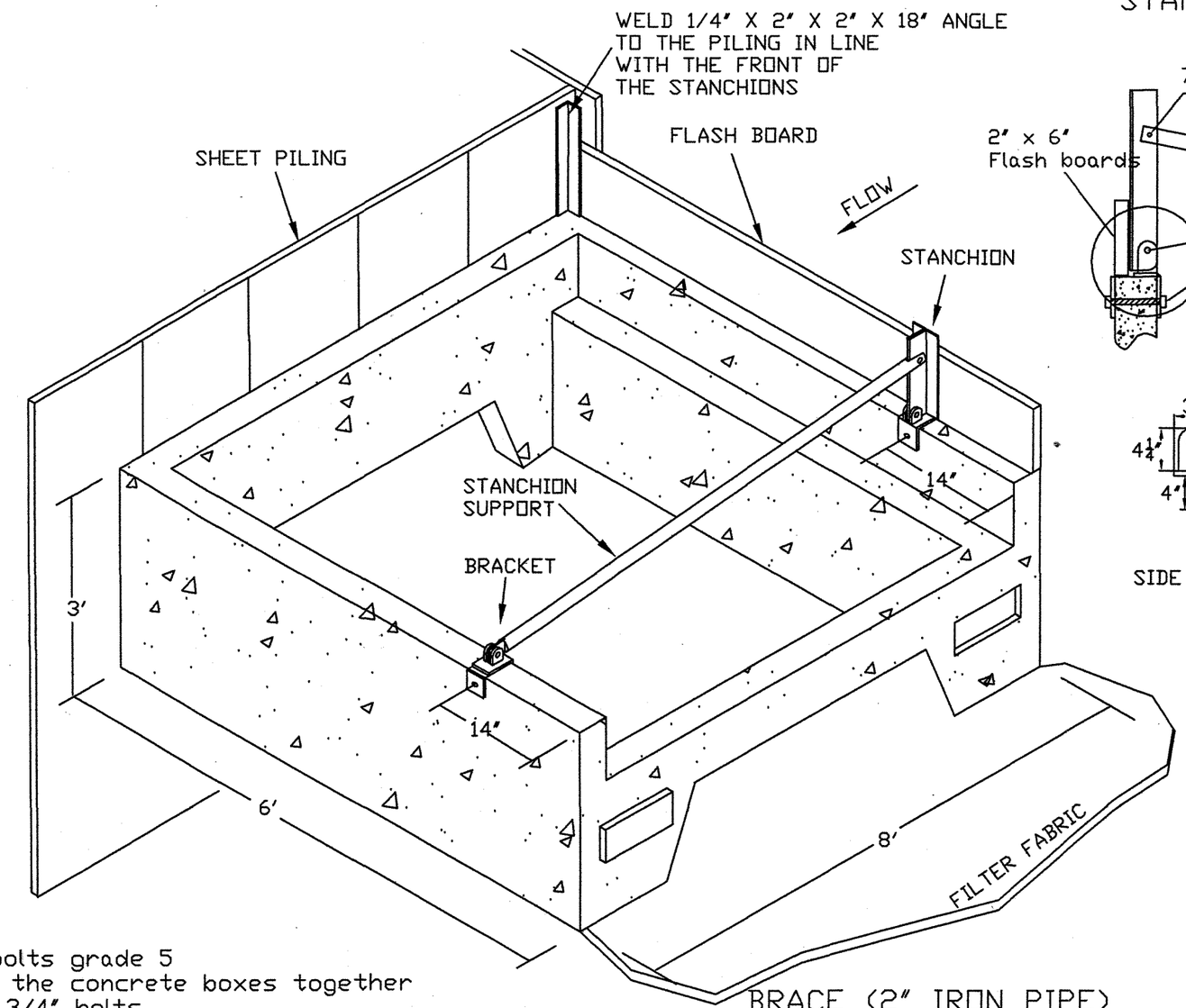

STANCHION HINGE

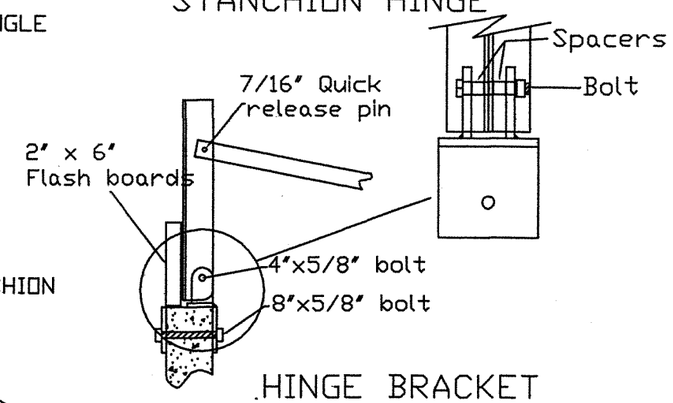

VERTICAL MEMBER

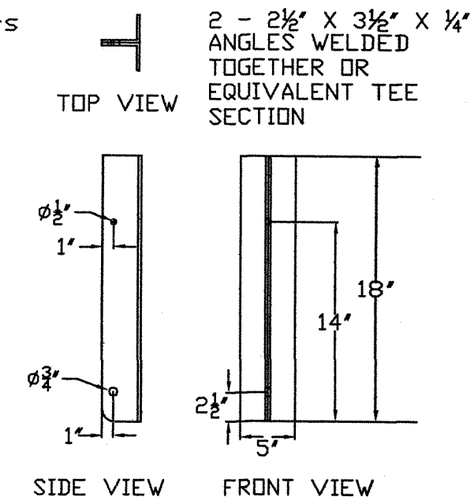

HINGE BRACKET

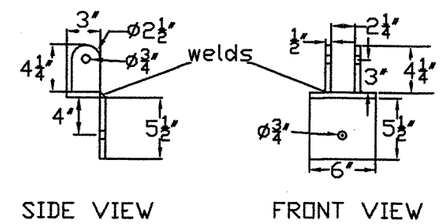

SPACERS

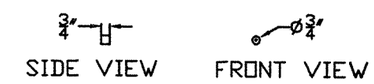

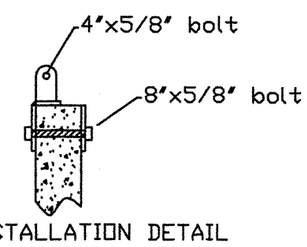

INSTALLATION DETAIL

WASHER

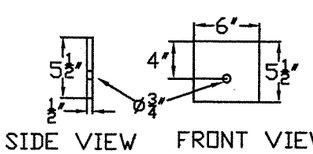

NOTES:
- All bolts grade 5
- Bolt the concrete boxes together with 3/4" bolts.
- Place boxes on filter fabric

BRACE (2" IRON PIPE)

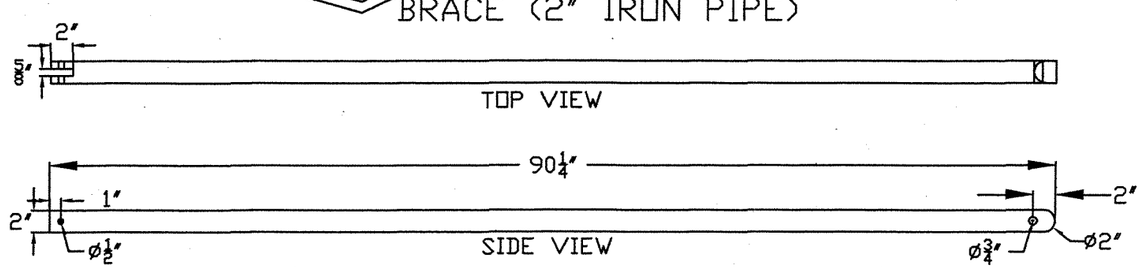

REGISTERED PROFESSIONAL ENGINEER 11,450 Gary A. Wilson OREGON DECEMBER 3, 1981 GARY A. WILSON

EXPIRES 6/30/2006

Plotted 5/17/05 AS BUILT 12/6/05 JK

Grant Soil & Water Conservation District	
DRAWN BY: J. Kehrberg	DATE: 4/26/05
CHECKED BY: G. Wilson	DRAWING NO.: #5
JOB NO.: Holliday Diversion	SHEET 5 OF 9

SECTION B-B

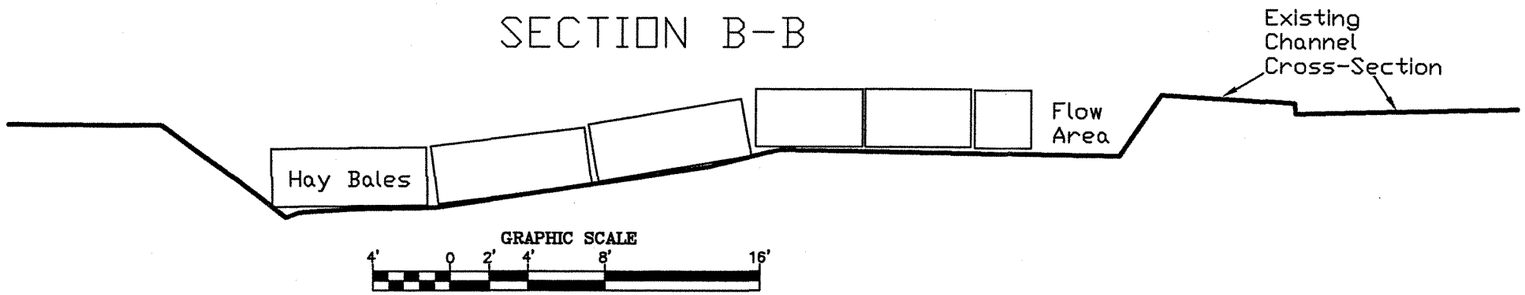

TEMPORARY WATER CONTROL BERM SITE PLAN

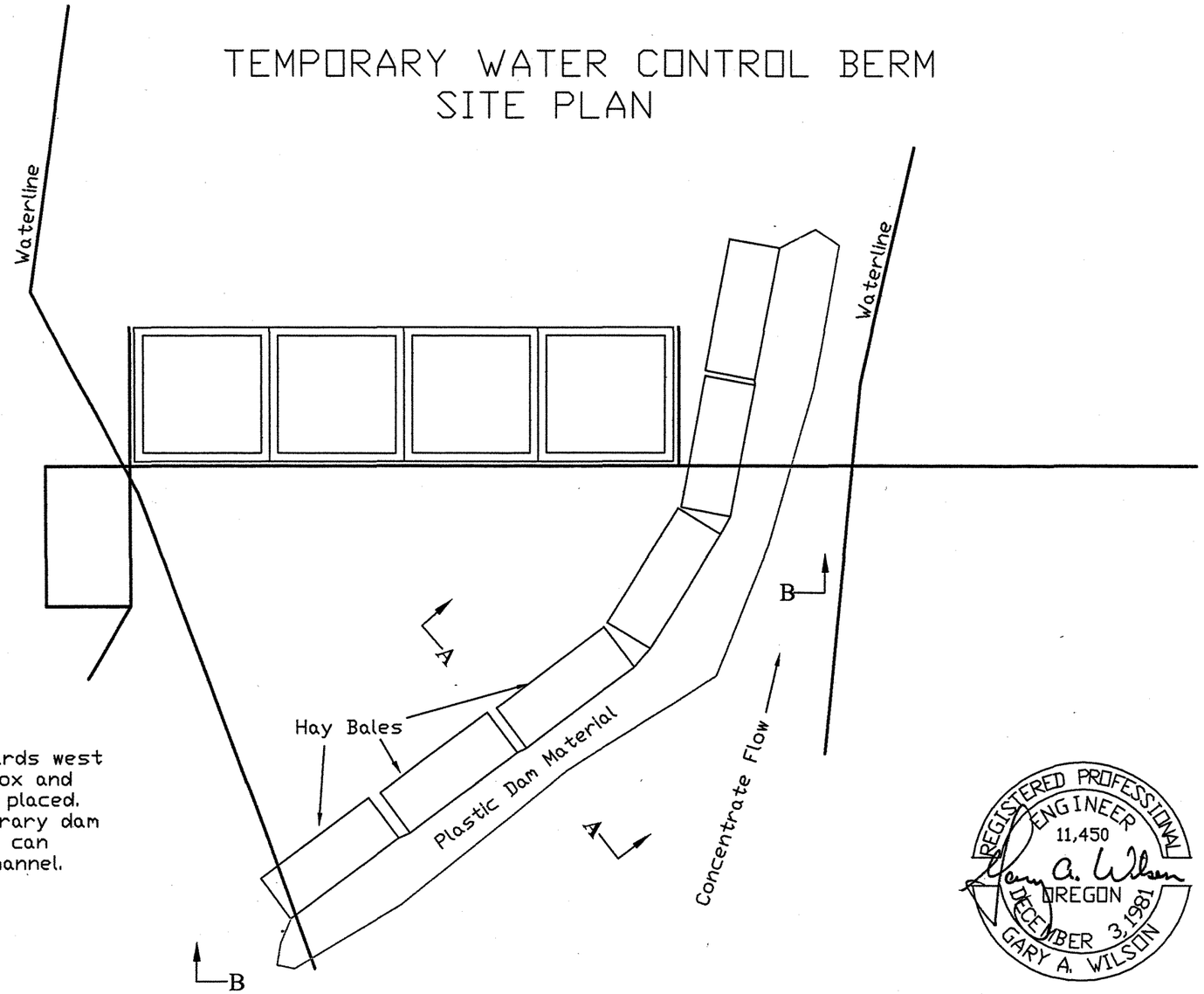

CROSS-SECTION A-A

Not To Scale

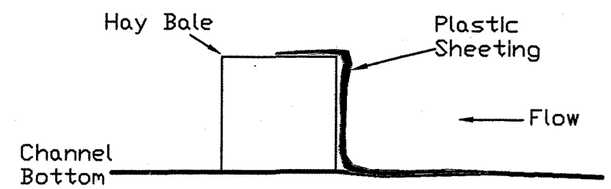

Note
Dam will be constructed with 3'X3'X8' hay bales and plastic sheeting. Dam will concentrate the main stream flow away from the construction area. No stream bed disturbance is anticipated.

Note
Flow will be directed towards west bank while the turnout box and the concrete blocks are placed. Once installed, the temporary dam will be removed and flows can return to the original channel.

REGISTERED PROFESSIONAL ENGINEER
11,450
Gary A. Wilson
OREGON
DECEMBER 3, 1981
GARY A. WILSON

EXPIRES 6/30/2006

Plotted 5/17/05 AS BUILT 12/6/05 JK

Grant Soil & Water Conservation District	
DRAWN BY: J. Kehrberg	DATE: 4/26/05
CHECKED BY: G. Wilson	DRAWING NO.: #6
JOB NO.: Holliday Diversion	SHEET 6 OF 9

DELIVERY PIPELINE ALIGNMENT DETAIL

GRAPHIC SCALE

40 0 20 40 80 160

(IN FEET)

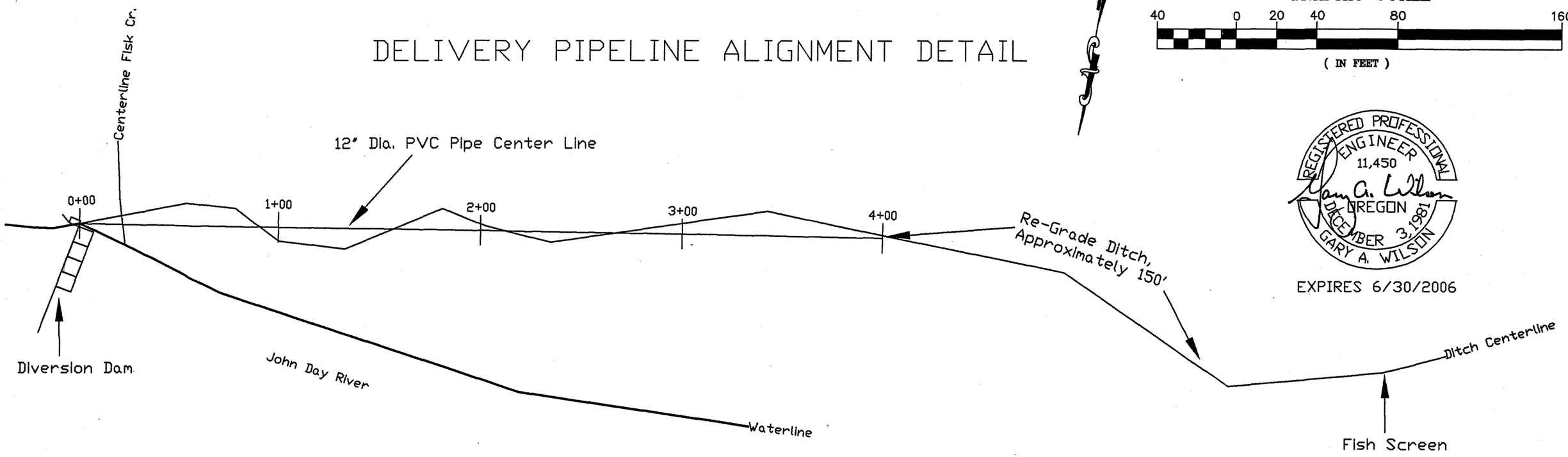

REGISTERED PROFESSIONAL ENGINEER 11,450 OREGON DECEMBER 3, 1981 GARY A. WILSON

EXPIRES 6/30/2006

DELIVERY PIPE/DITCH GRADE PROFILE

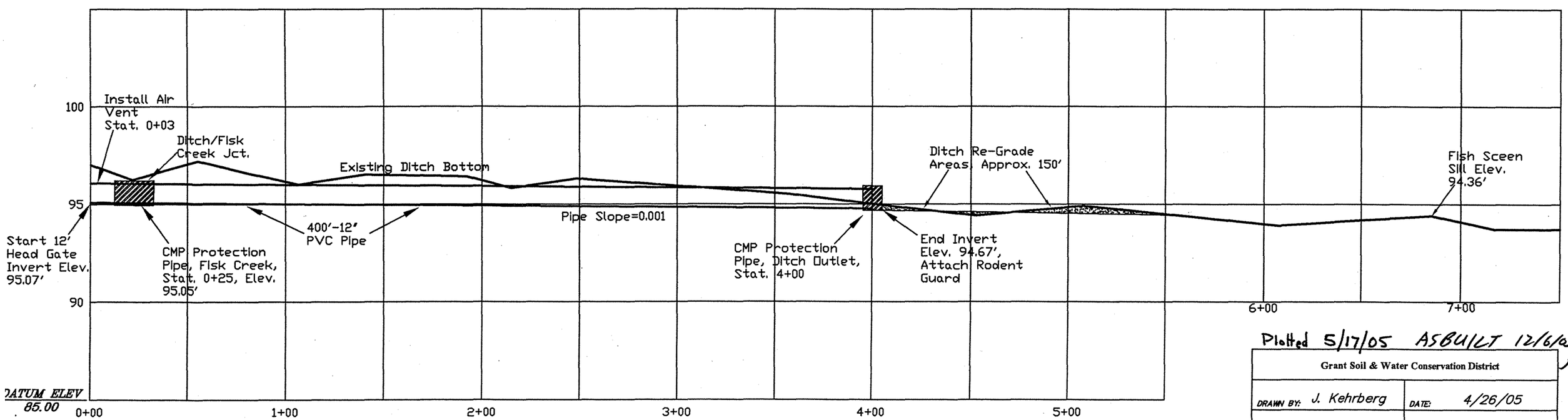

Plotted 5/17/05 ASBUILT 12/6/05 JCL

Grant Soil & Water Conservation District	
DRAWN BY: J. Kehrberg	DATE: 4/26/05
CHECKED BY: G. Wilson	DRAWING NO.: #7
JOB NO.: Holliday Diversion	SHEET 7 OF 9

TURNOUT BOX DETAIL

Plan View

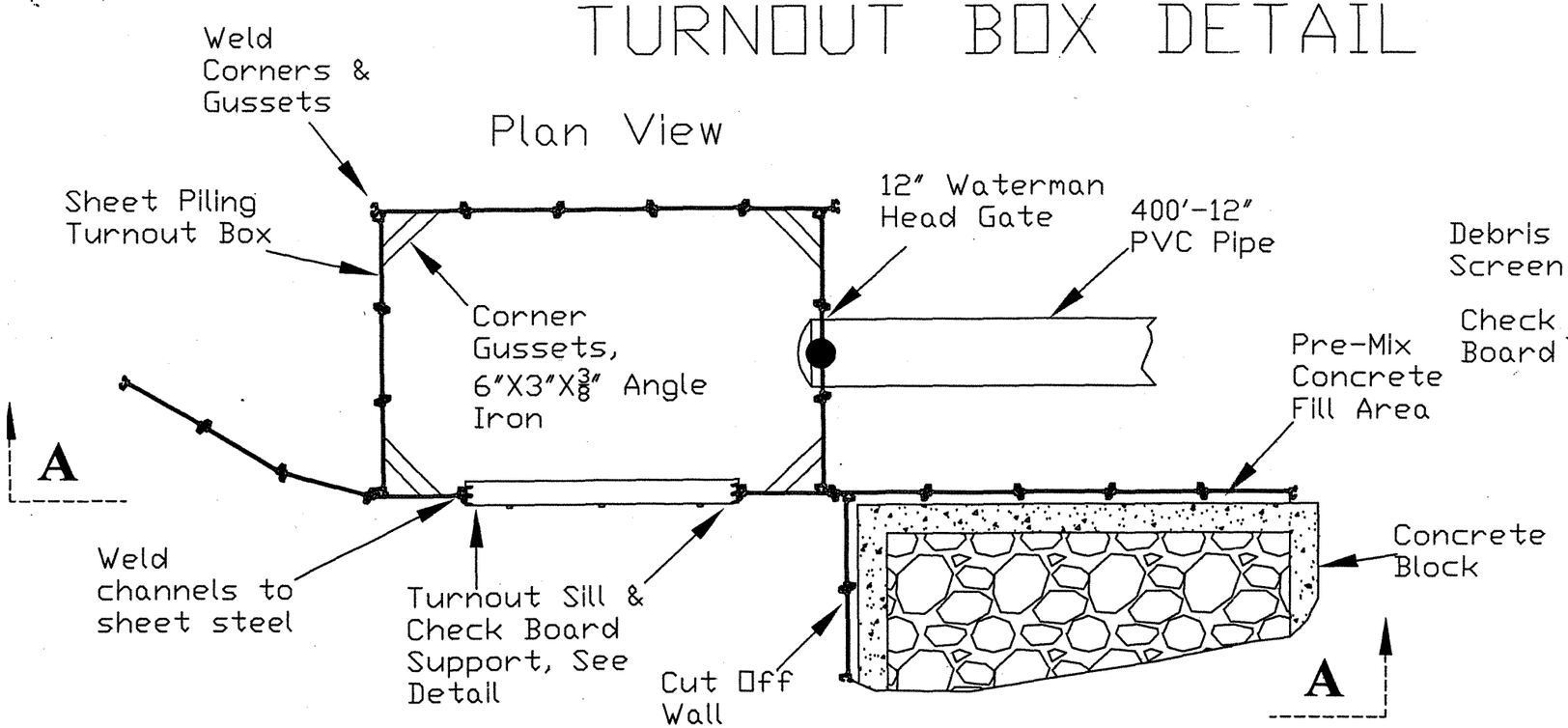

Isometric View

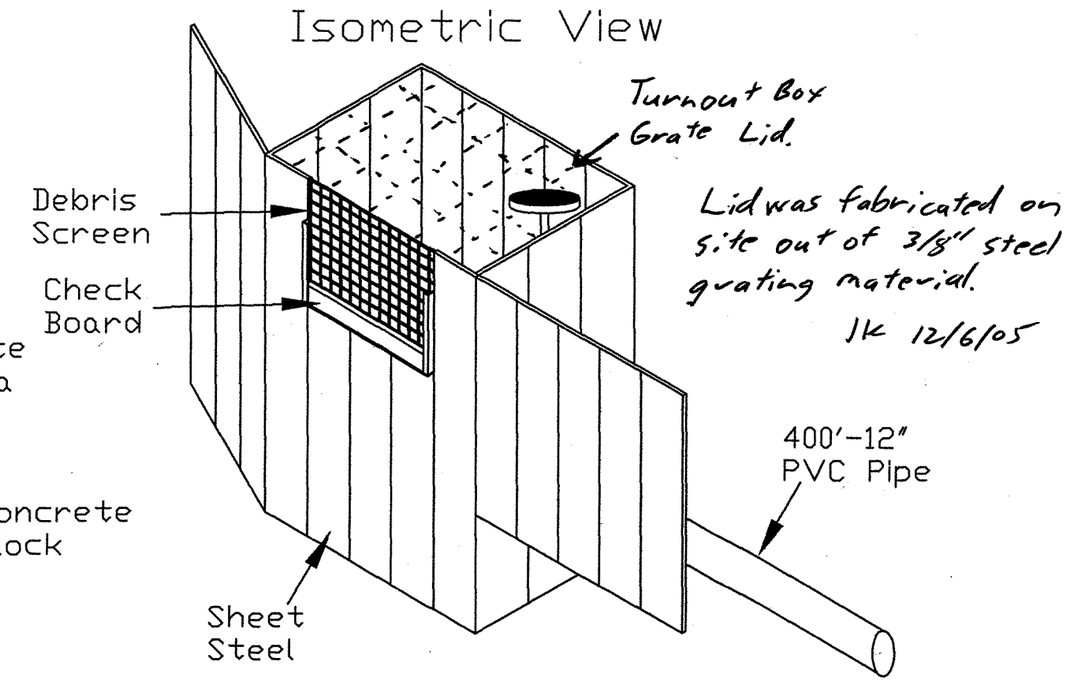

Lid was fabricated on site out of 3/8" steel grating material.
JK 12/6/05

Sill & Check Board/Screen Support Detail

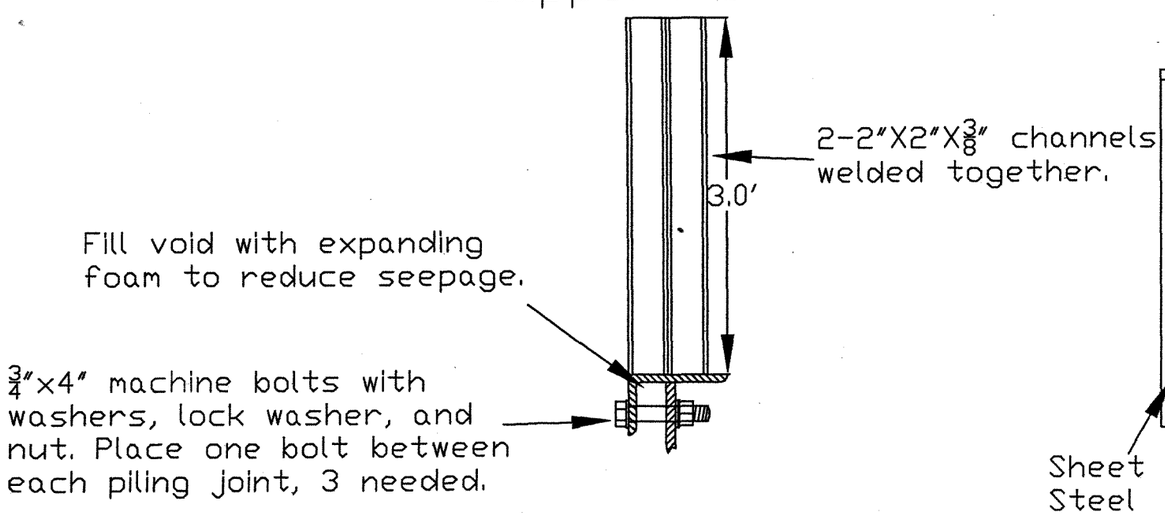

Section A-A

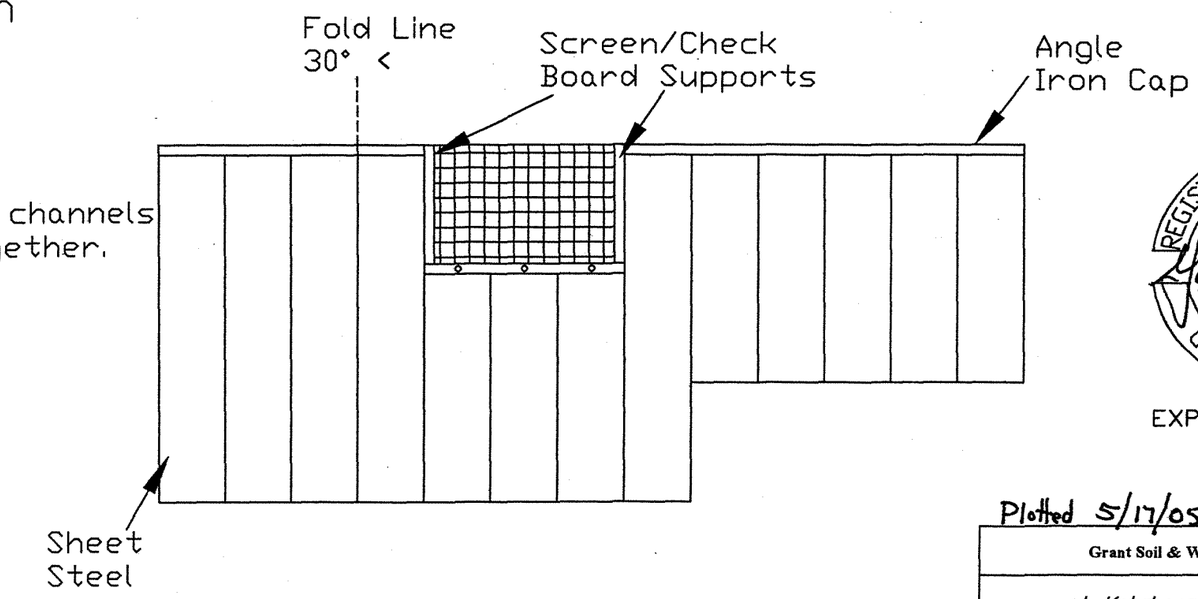

REGISTERED PROFESSIONAL ENGINEER 11,450 OREGON DECEMBER 3, 1981 GARY A. WILSON

EXPIRES 6/30/2006

Plotted 5/17/05 AS BUILT 12/6/05 JK

Grant Soil & Water Conservation District	
DRAWN BY: J. Kehrberg	DATE: 4/26/05
CHECKED BY: G. Wilson	DRAWING NO.: #8
JOB NO.: Holliday Diversion	SHEET 8 OF 9

FISH PASSAGE SILL DETAIL

Note To Scale

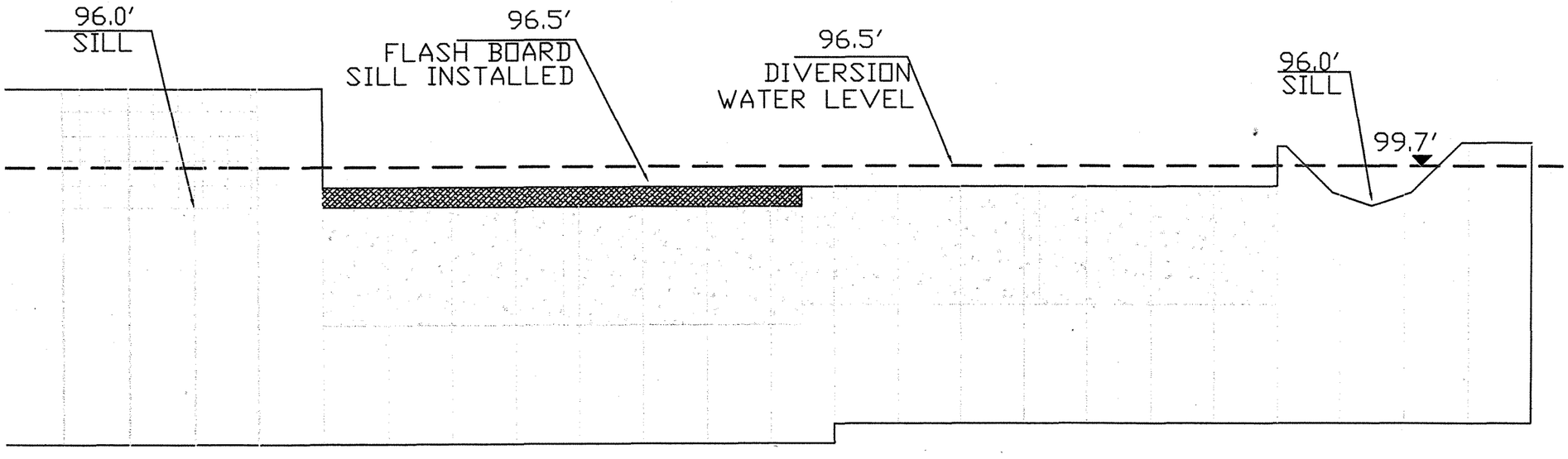

FISH PASSAGE NOTCH DETAIL

Note To Scale

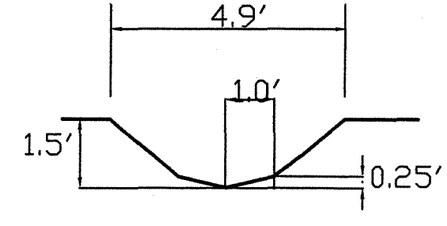

FISH PASSAGE FLOW			
FLOW DEPTH	WS ELEV.	FLOW	VELOCITY
0.8 FT	99.7 FT	4.3 CFS	2.5 FPS
1.3 FT	100.0 FT	12.8 CFS	3.3 FPS

FISH PASSAGE OUTFALL DETAIL

Note To Scale

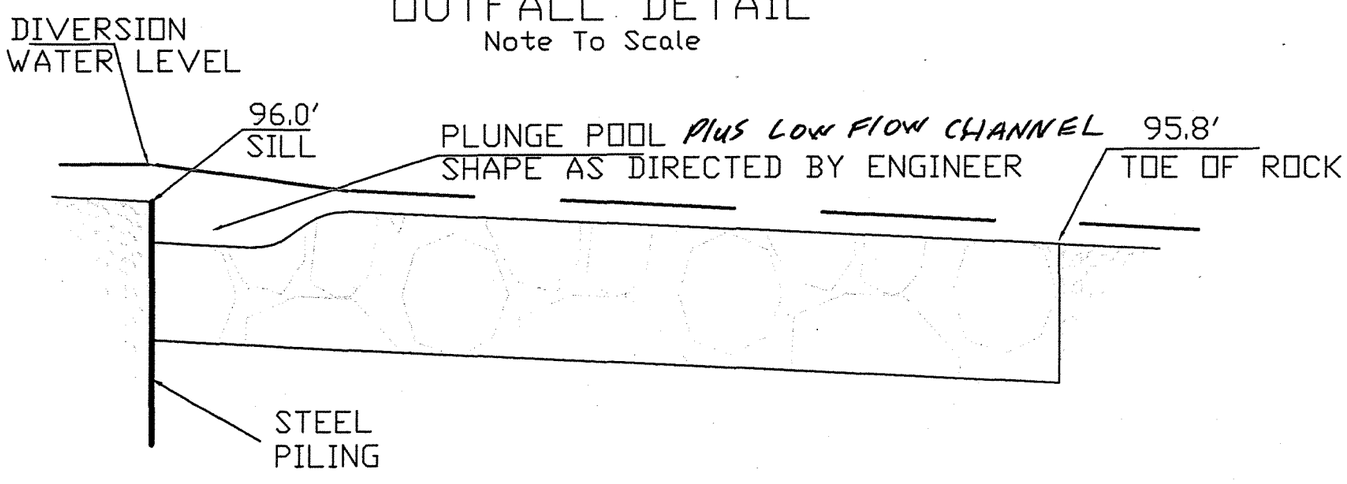

REGISTERED PROFESSIONAL ENGINEER
11,450
Gary A. Wilson
OREGON
DECEMBER 3, 1981
GARY A. WILSON

EXPIRES 6/30/2006

Plotted 5/17/05 ASBUILT 12/6/05 JK

Grant Soil & Water Conservation District	
DRAWN BY: J. Kehrberg	DATE: 4/26/05
CHECKED BY: G. Wilson	DRAWING NO.: #9
JOB NO.: Holliday Diversion	SHEET 9 OF 9

EAST PINE CREEK BYPASS ALIGNMENT DETAIL

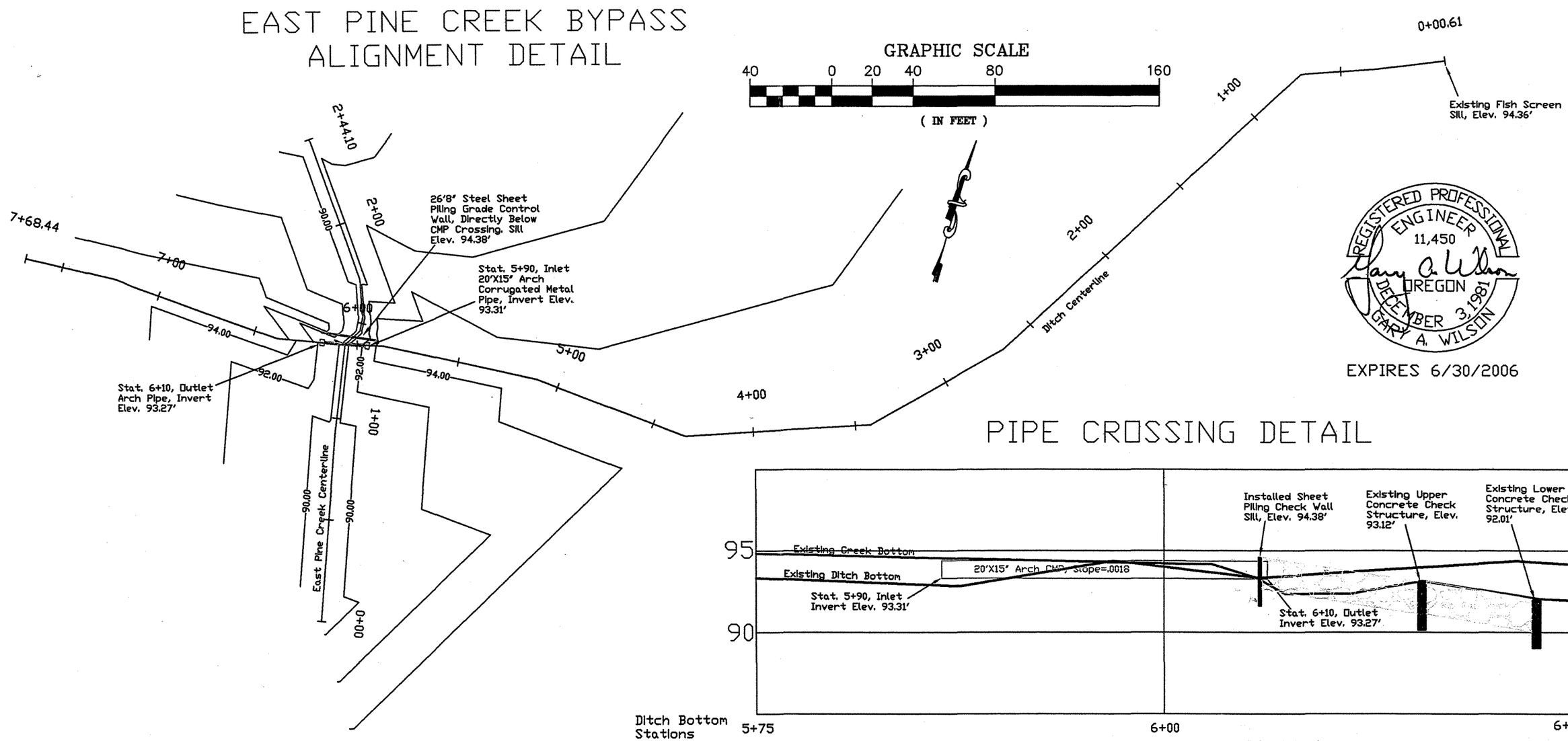

REGISTERED PROFESSIONAL ENGINEER 11,450 OREGON DECEMBER 3, 1981 GARY A. WILSON

EXPIRES 6/30/2006

PIPE CROSSING DETAIL

EXISTING DITCH PROFILE

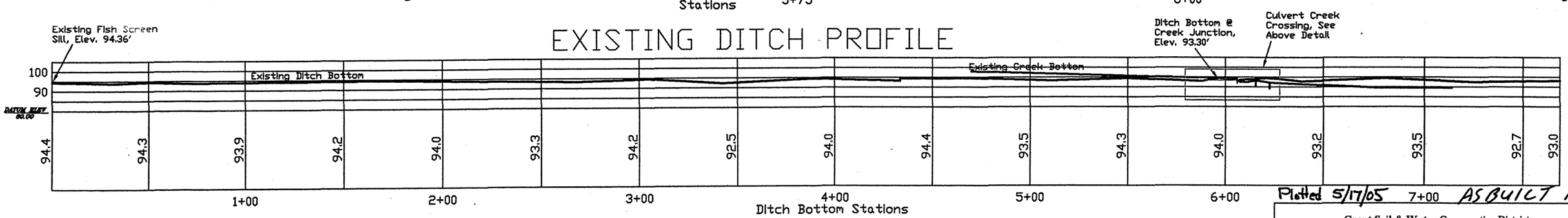

Plotted 5/17/05 AS BUILT 12/6/05 JK

Grant Soil & Water Conservation District	
DRAWN BY: J. Kehrberg	DATE: 5/2/05
CHECKED BY: G. Wilson	DRAWING NO.: Str. Crossing
JOB NO.: Holliday Diversion	SHEET 1 OF 3

EAST PINE CREEK CROSSING SITE PLAN

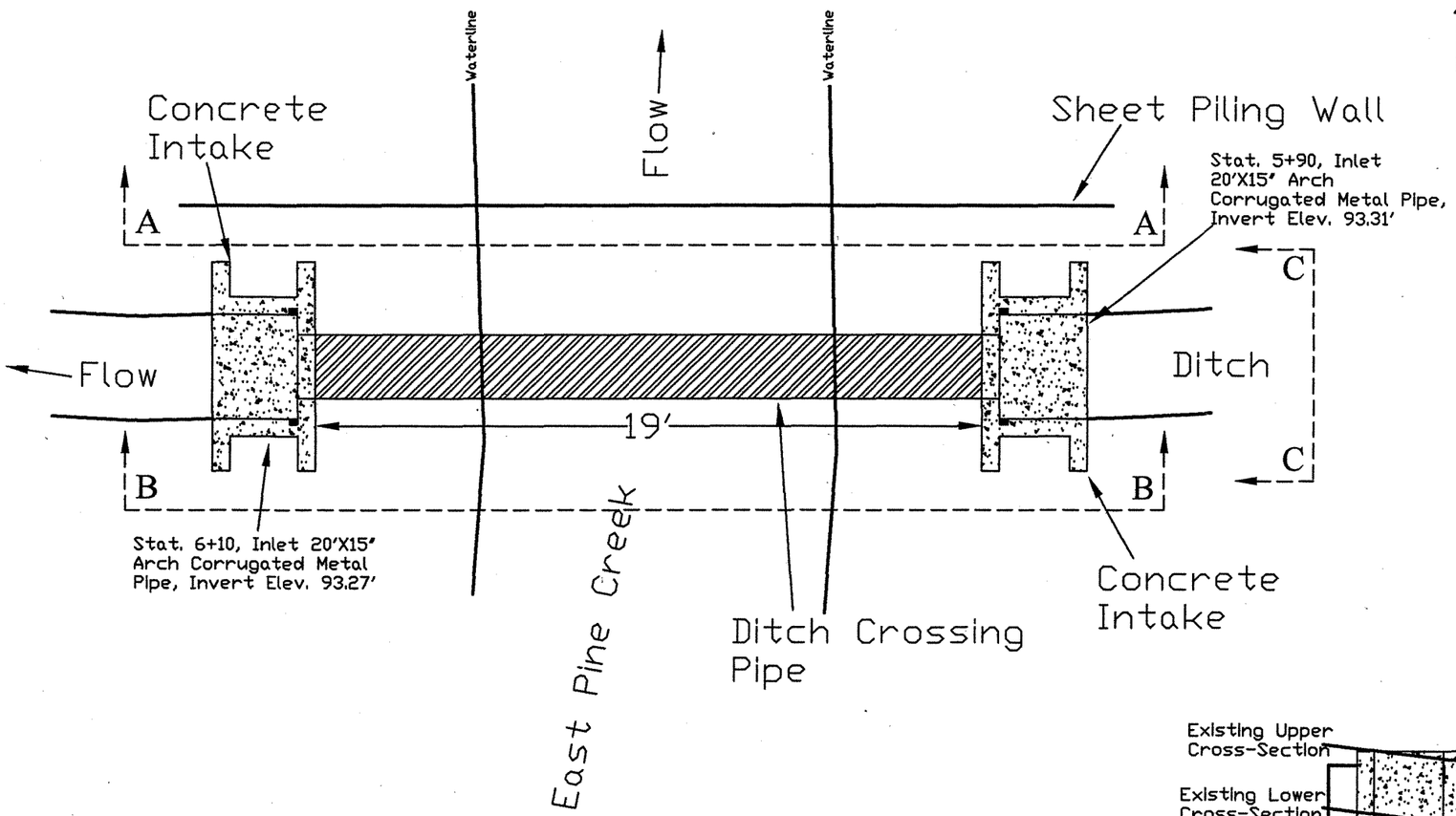

GRAPHIC SCALE

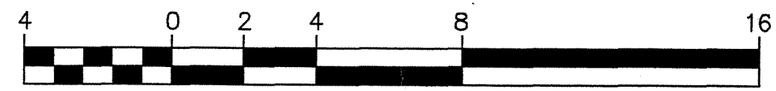

(IN FEET)

SECTION C-C

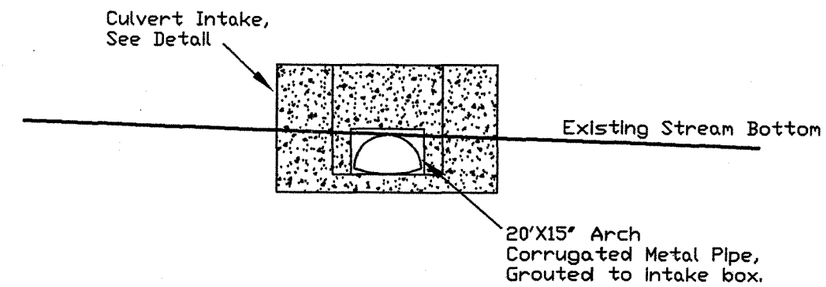

SECTION B-B

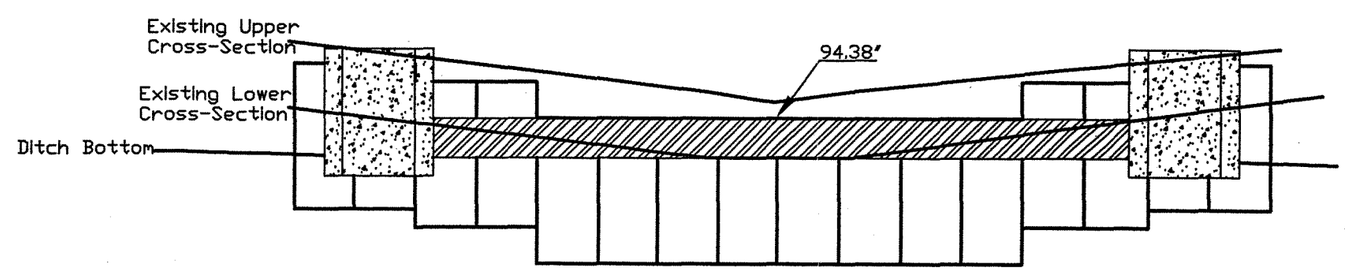

SECTION A-A

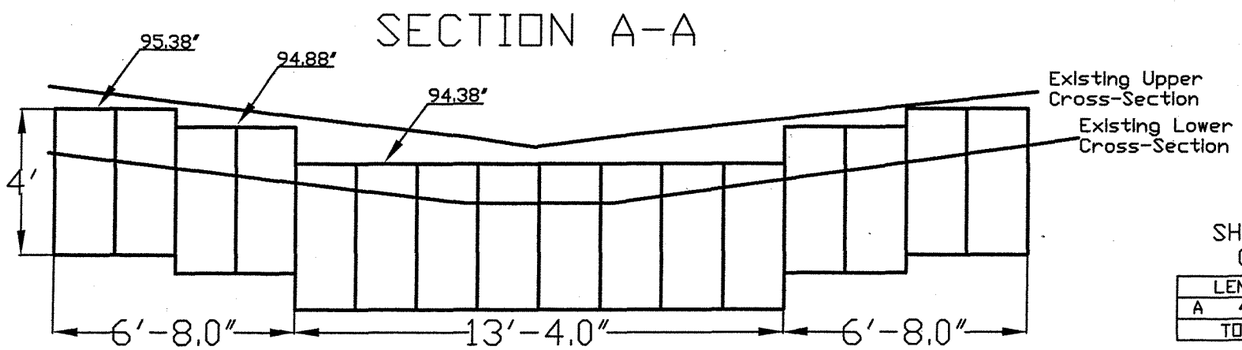

SHEET PILE PIECE CUT SCHEDULE

LENGTH	# REQUIRED
A 4' 0"	16 Each
TOTAL LENGTH 64 LF	

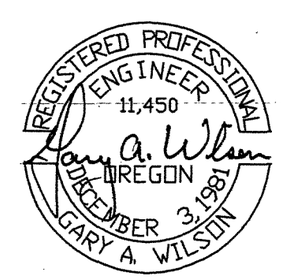

EXPIRES 6/30/2006

Plotted 5/17/05 ASBUILT 12/6/05 JK

Grant Soil & Water Conservation District	
DRAWN BY: J. Kehrberg	DATE: 5/9/05
CHECKED BY: G. Wilson	DRAWING NO.: Str. Crossing
JOB NO.: Holliday Diversion	SHEET 2 OF 3

Pine Creek Ditch Crossing Plan View

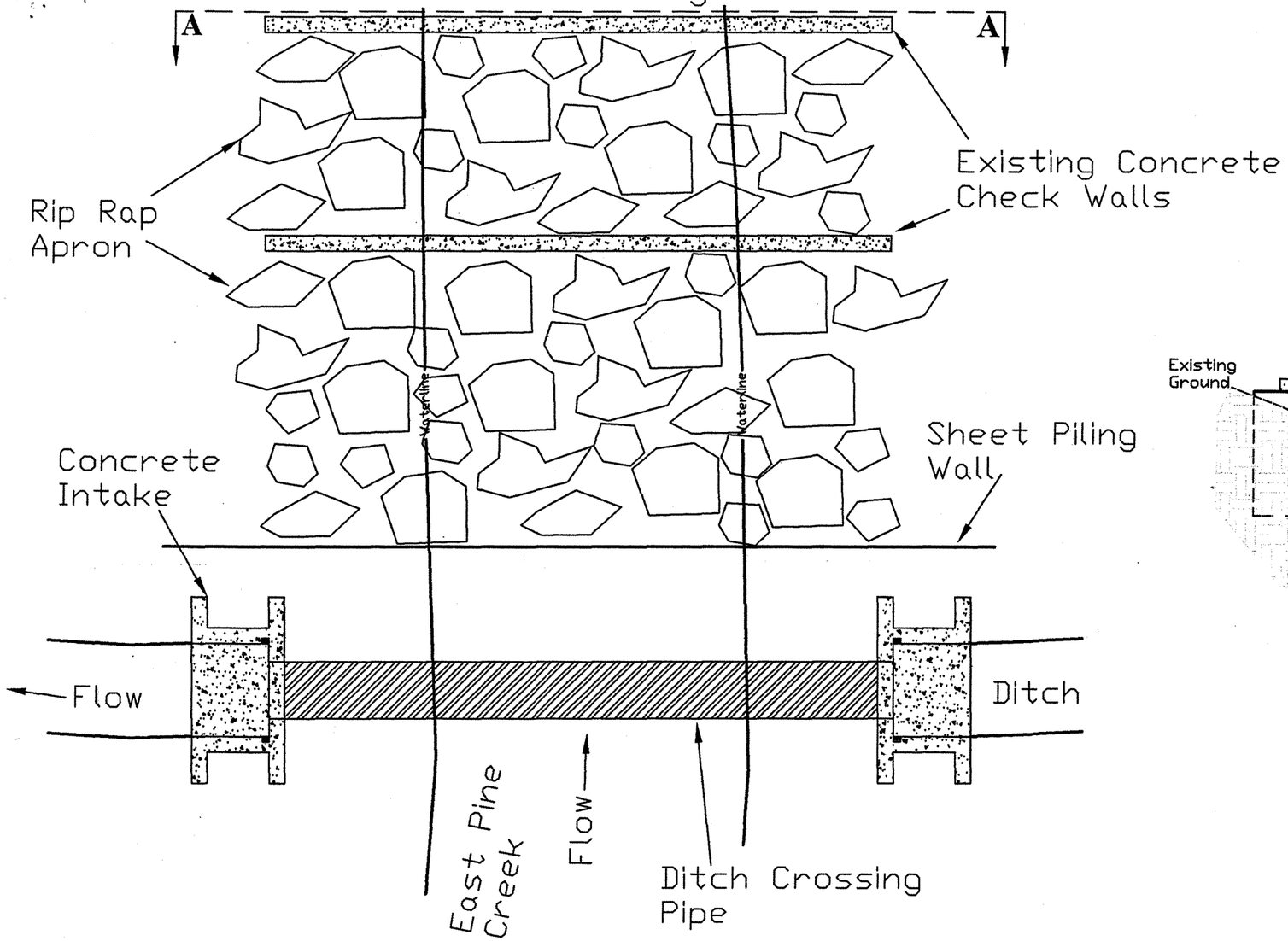

GRAPHIC SCALE

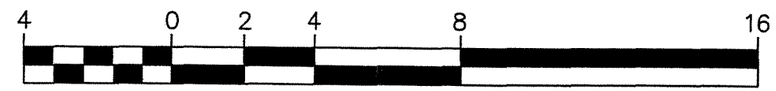

(IN FEET)

SECTION A-A

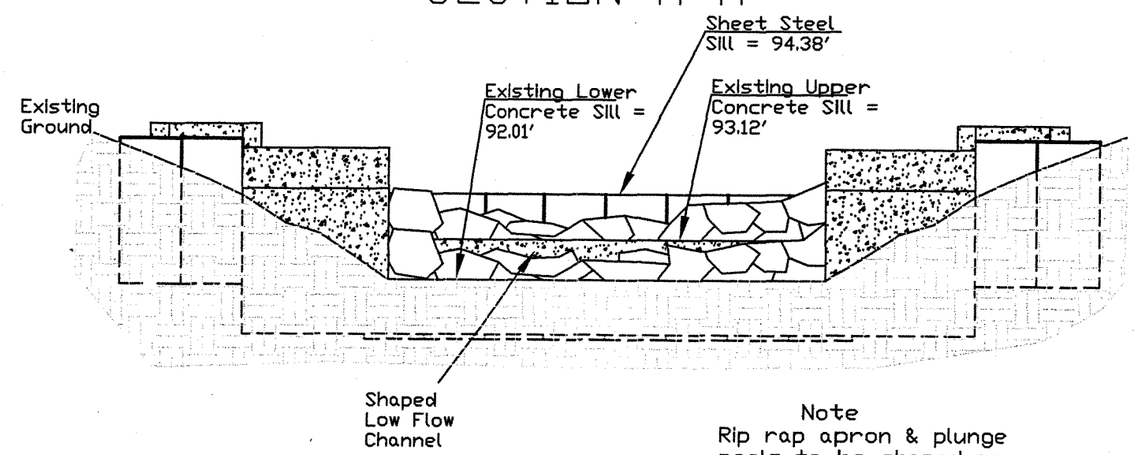

Note
Rip rap apron & plunge pools to be shaped as directed by engineer. Apron will constructed to concentrate low flow through the structure.

Ditch Crossing/Stream Profile

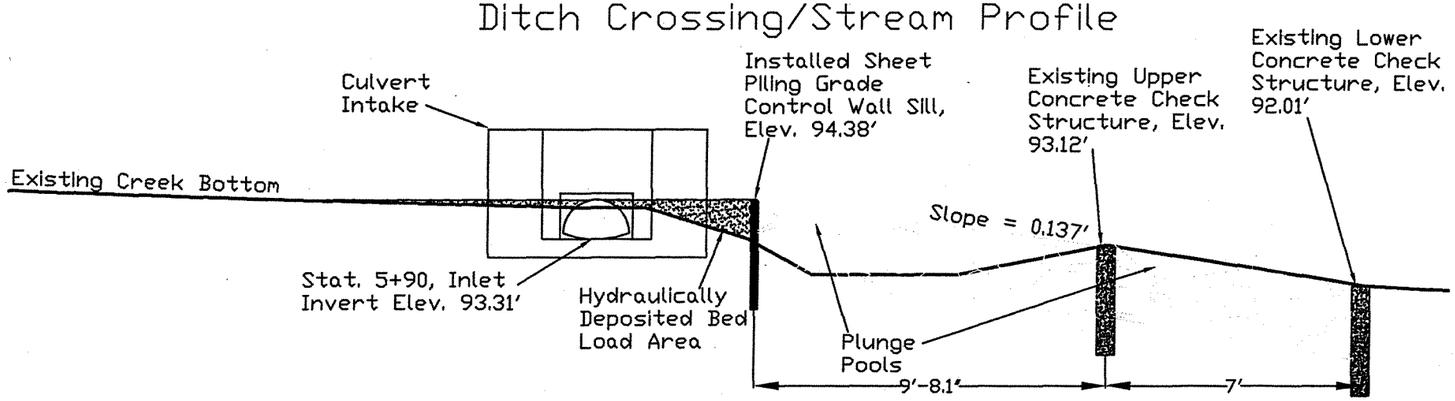

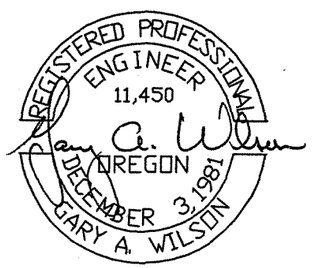

EXPIRES 6/30/2006

Plotted 6/15/05

Grant Soil & Water Conservation District	
DRAWN BY: J. Kehrberg	DATE: 6/9/05
CHECKED BY: G. Wilson	DRAWING NO.: Str. Crossing
JOB NO: Holliday Diversion	SHEET 2B OF 3

CULVERT INTAKE DETAIL

TWO INTAKE BOXES NEEDED

Front View

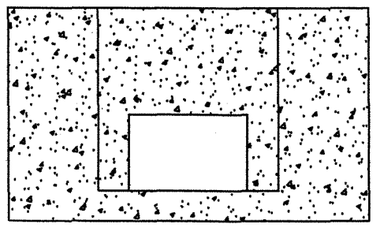

Back View

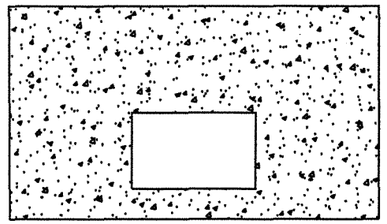

Side View

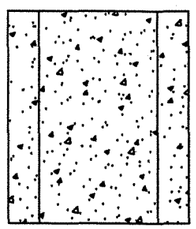

Top View

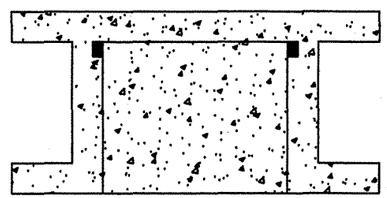

Top View Dimensions

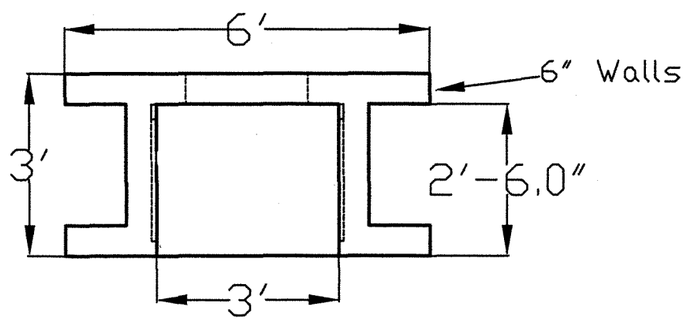

Front View Dimensions

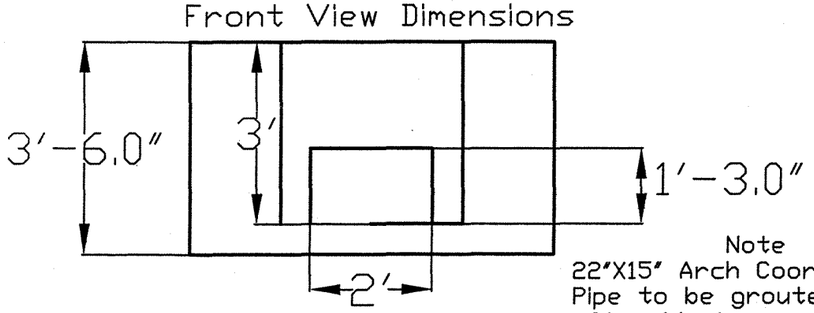

Note
22"X15" Arch Coorugated Metal Pipe to be grouted into place after blocks are installed to required grades and positions.

DEBRIS SCREEN CHANNEL DETAIL

FOUR CHANNELS NEEDED

Hidden Side View

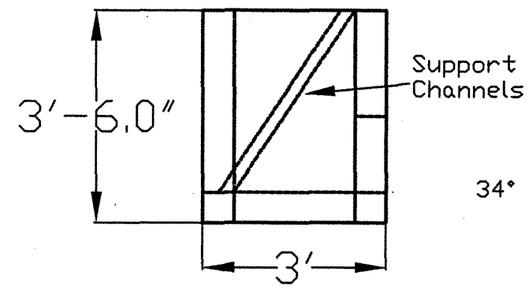

Steel Channel Detail

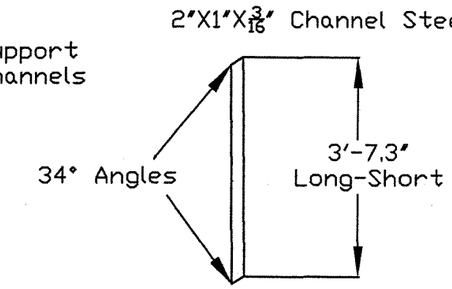

DEBRIS SCREEN CHANNEL DETAIL

TWO SCREENS NEEDED

Front View

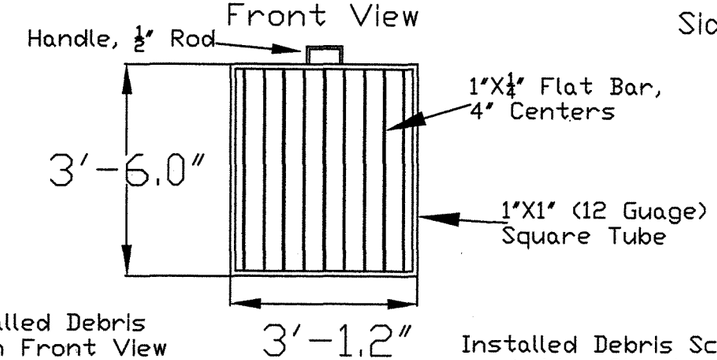

Side View

Installed Debris Screen Front View

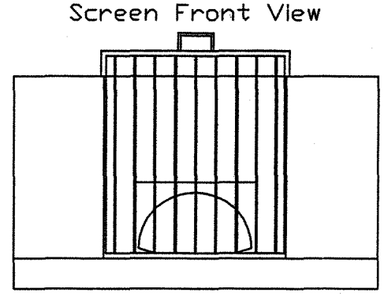

Installed Debris Screen Hidden Side View

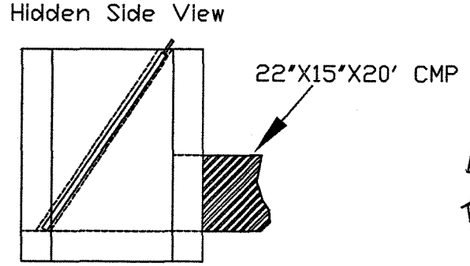

APPROXIMATE REBAR DETAIL

#4 Bar @ 12"+- Spacing

Back View

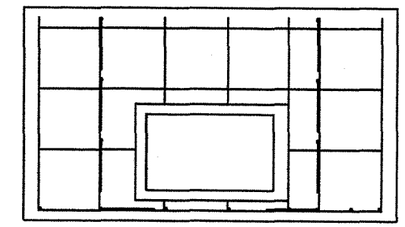

Front View

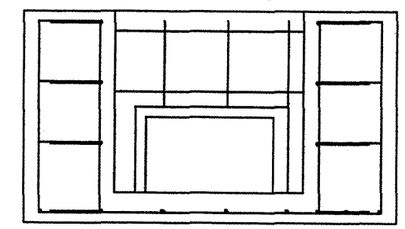

Note
All reinforcing steel to be placed a minimum of 2" clear of nearest face of concrete. Reinforcing steel to be lapped 20 bar diameters at splices.

MATERIAL ESTIMATES FOR ONE INTAKE

1. Approximately 100' 1/2" #4 Rebar
2. Approximately 1 Cubic Yard Concrete

REGISTERED PROFESSIONAL ENGINEER 11,450 OREGON DECEMBER 3, 1981 GARY A. WILSON

EXPIRES 6/30/2006

Plotted 5/17/05 AS BUILT 12/6/05 JK

Grant Soil & Water Conservation District	
DRAWN BY: J. Kehrberg	DATE: 5/2/05
CHECKED BY: G. Wilson	DRAWING NO.: Str. Crossing
JOB NO.: Holliday Diversion	SHEET 3 OF 3

Grant Soil and Water Conservation District
721 S. Canyon Blvd. - John Day, Oregon 97845 - Phone (541) 575-0135 - Fax (541) 575-0646

January 17, 2006

US Bureau of Reclamation
P.O. Box 909, Patterson Bridge Rd
John Day OR 97845
Attn: Mark L. Croghan, Subbasin Liaison

US Bureau of Reclamation
1150 N. Curtis Road, Suite 100
Boise ID 83706-1234
Attn: Lisa V. Wuttke

Subject: **As-Built Drawing Submittal Follow-Up**
Contract No. 03CA101530
Task Order No. 03A9101530 – Holliday Ranch (Main Stem) Diversion

Enclosed are the As-Built Drawings for the East Pine Creek portion of the Subject Project. Please attach these drawings to the Holliday Ranch (Main Stem) Diversion As-Built Drawings I sent you on January 9, 2006.

If you have any questions or comments regarding this design or submittal please don't hesitate to give me a call (541) 575-0135 ext 106.

Sincerely,

Gary A. Wilson PE
District Engineer

MAIN PINE CREEK BYPASS ALIGNMENT DETAIL

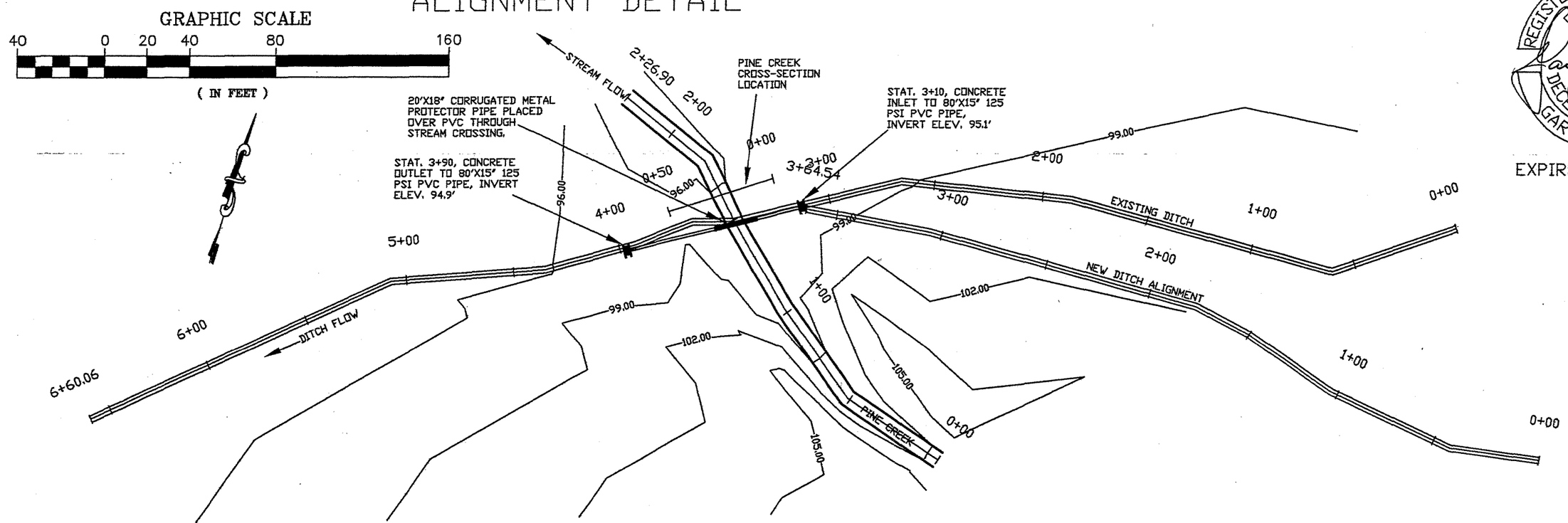

REGISTERED PROFESSIONAL ENGINEER 11,450 OREGON DECEMBER 3, 1981 GARY A. WILSON

EXPIRES 6/30/2006

MAIN PINE CREEK BYPASS CROSSING PROFILE DETAIL

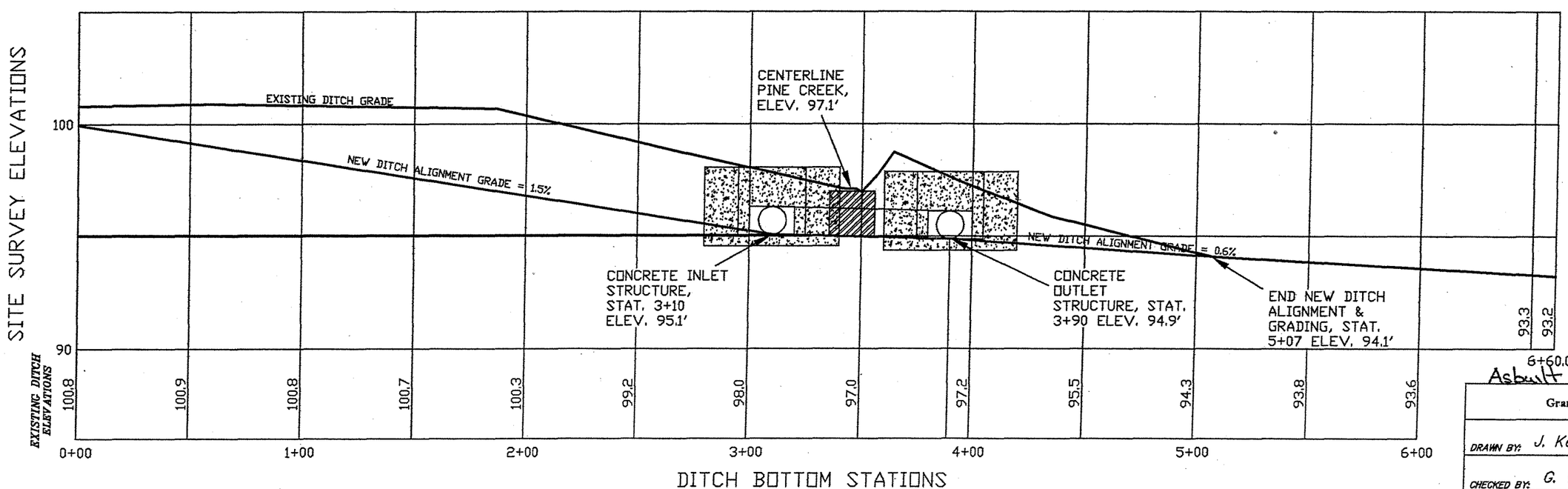

Asbuilt 1/17/06

Grant Soil & Water Conservation District	
DRAWN BY: J. Kehrberg	DATE: 9/11/05
CHECKED BY: G. Wilson	DRAWING NO.: PineCrCrossing
JOB NO: Holliday Diversion	SHEET 1 OF 2

PINE CREEK CROSSING SITE PLAN

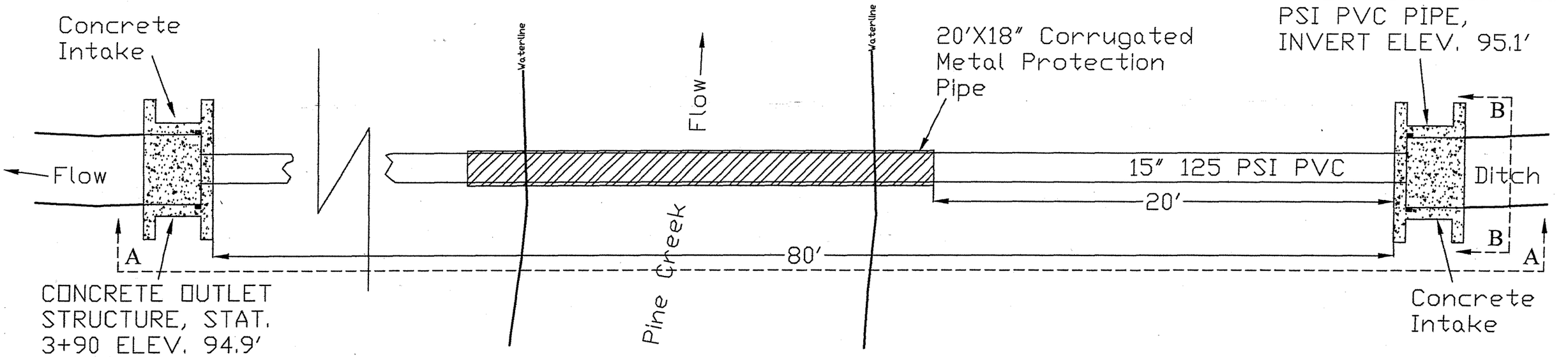

SECTION A-A

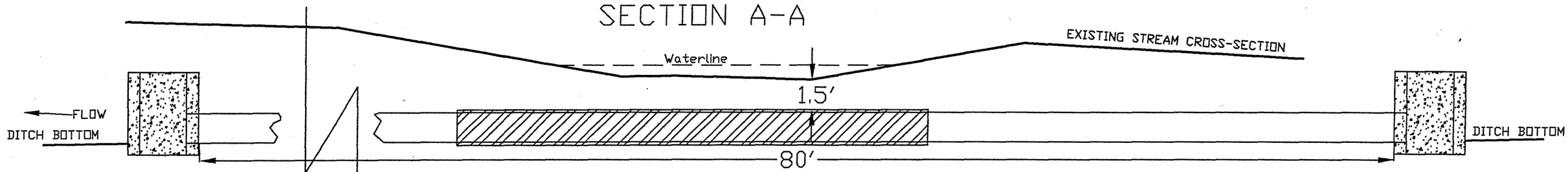

AVERAGE TRENCH BACKFILL PROFILE DETAIL

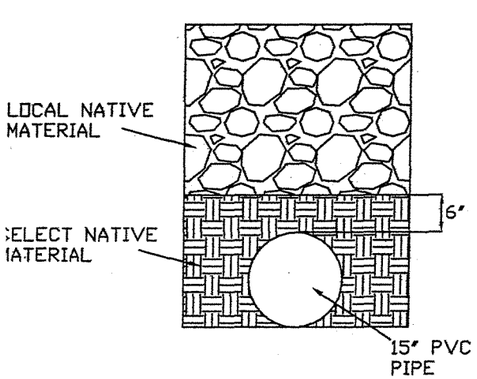

NOTE
PIPE WILL REST ON UNDISTURBED TRENCH BOTTOM. SELECT NATIVE FILL MATERIAL WILL BE USED TO BED PIPE. A MINIMUM OF 6" OF SELECT FILL SHALL COVER PIPE BEFORE REMAINING FILL MATERIAL IS ADDED.

MAIN PINE CREEK PROFILE DETAIL & SECTION B-B

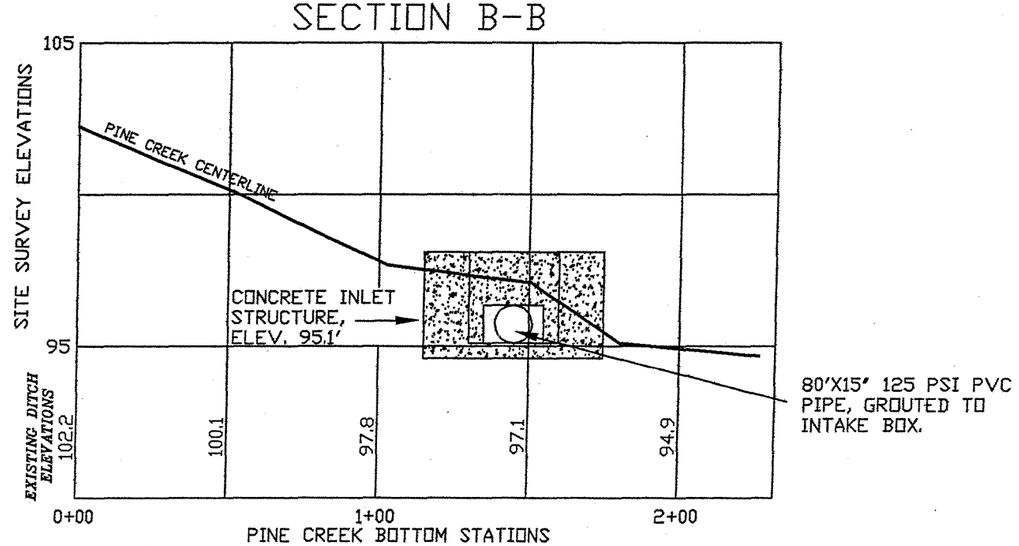

REGISTERED PROFESSIONAL ENGINEER 11,450 OREGON DECEMBER 3, 1981 GARY A. WILSON

EXPIRES 6/30/2006

Asbuilt 1/17/06

Grant Soil & Water Conservation District	
DRAWN BY: J. Kehrberg	DATE: 9/11/05
CHECKED BY: G. Wilson	DRAWING NO.: PineCrCrossing
Holliday Diversion	SHEET 2 OF 2

SITE PLAN VIEW

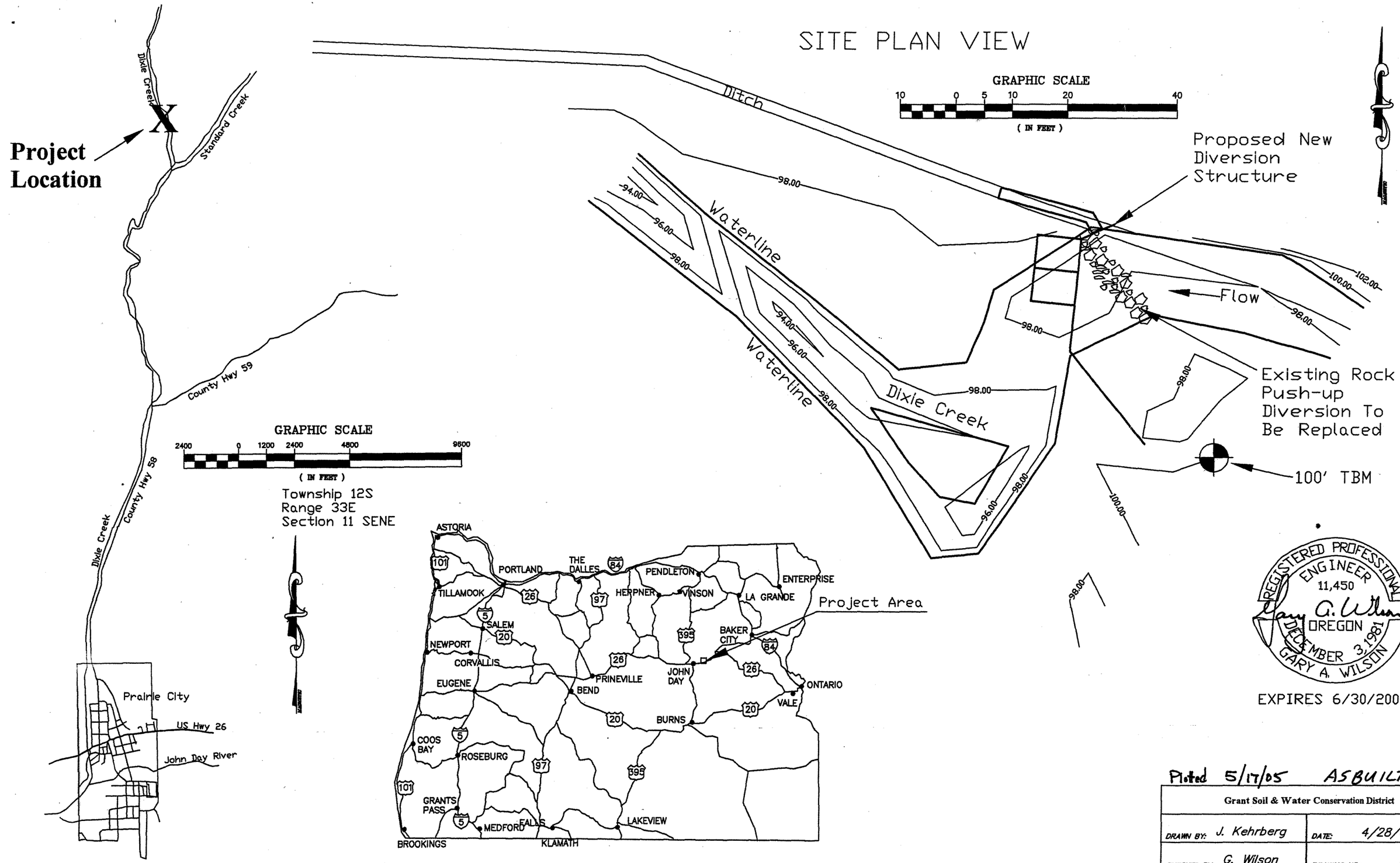

REGISTERED PROFESSIONAL ENGINEER 11,450 OREGON DECEMBER 3, 1981 GARY A. WILSON

Gary A. Wilson

EXPIRES 6/30/2006

Plotted 5/17/05 ASBUILT 11/30/05 JK

Grant Soil & Water Conservation District	
DRAWN BY: J. Kehrberg	DATE: 4/28/05
CHECKED BY: G. Wilson	DRAWING NO.: #1
JOB NO.: Raymond Div.	SHEET 1 OF 6

RIVER DIVERSION PLAN VIEW

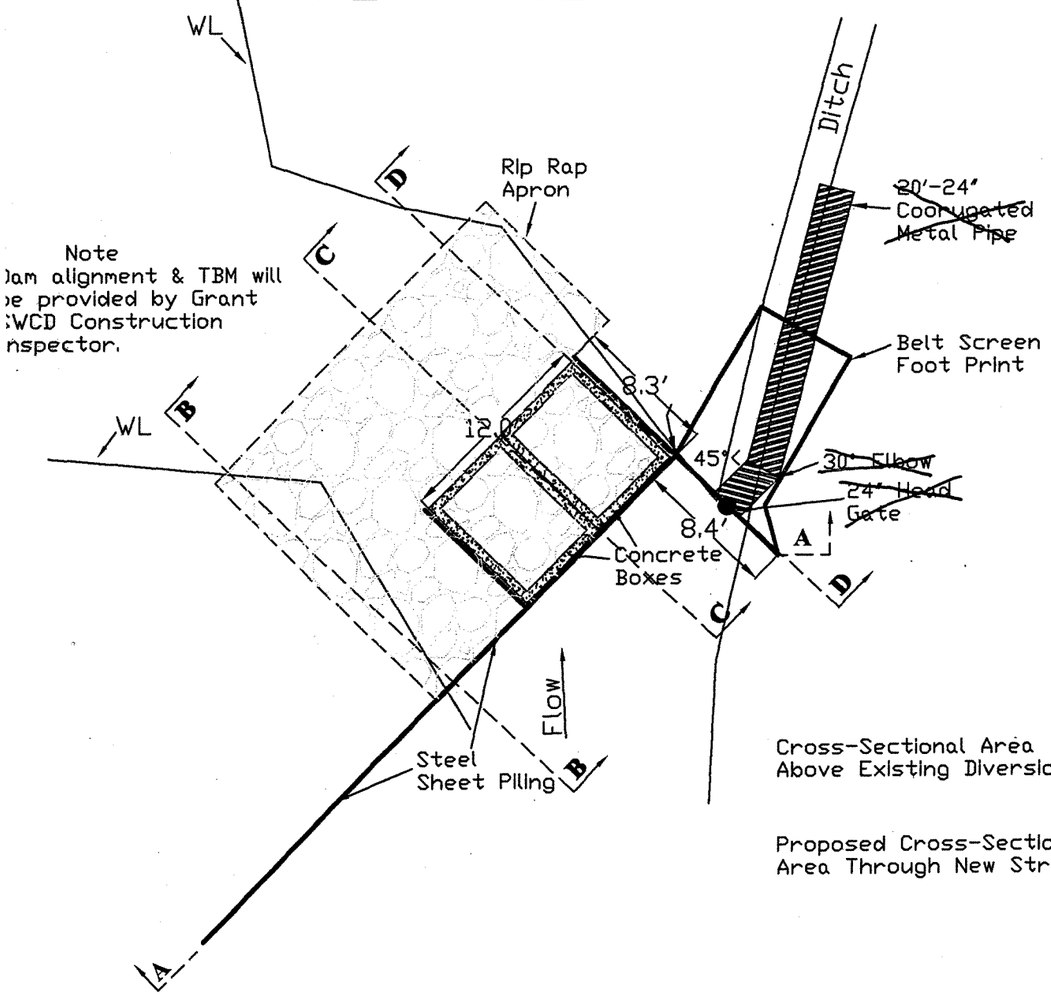

GRAPHIC SCALE

(IN FEET)

Headgate and coorugated metal pipe installations were eliminated with belt screen structure. Sheet piling wing wall was modified to allow ODFW, to attach screen.
JK 11/30/05

Note
1. Sheet piling will be driven or vibrated into proper position and elevation. No excavation will be allowed unless approved by the engineer.
2. Backfill concrete boxes with rip rap rock. Install rip rap apron to match existing stream gradient. Shape the channel and plunge pool below the fish passage opening as directed by the engineer to concentrate low flows, allowing for fish to move past the structure.

Cross-Sectional Area Above Existing Diversion

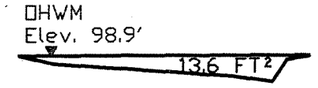

Proposed Cross-Sectional Area Through New Structure

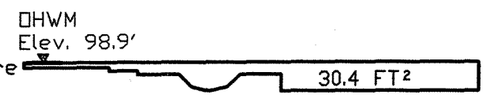

SECTION B-B

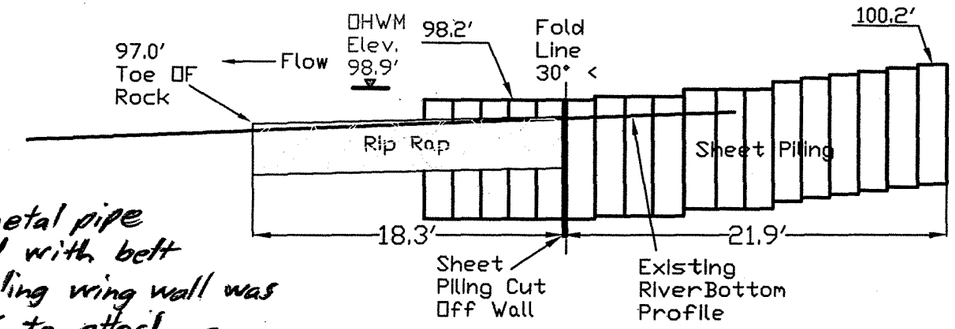

SECTION C-C

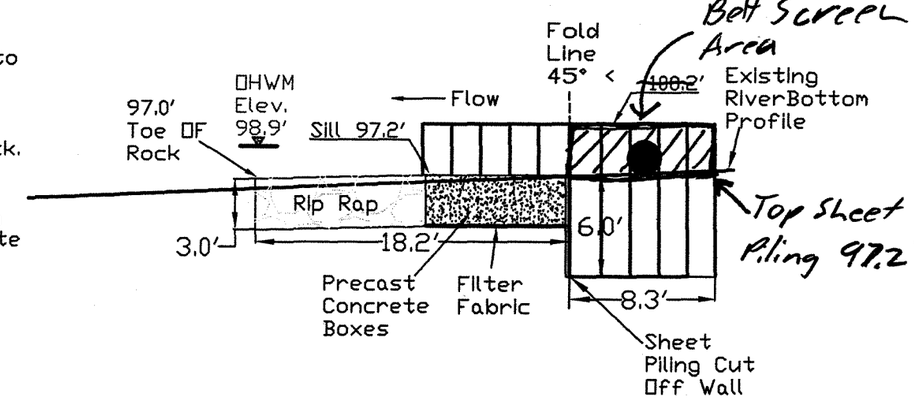

SECTION D-D

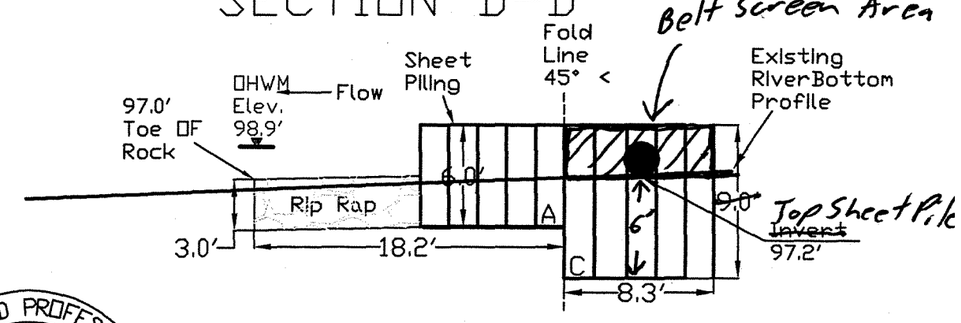

SECTION A-A

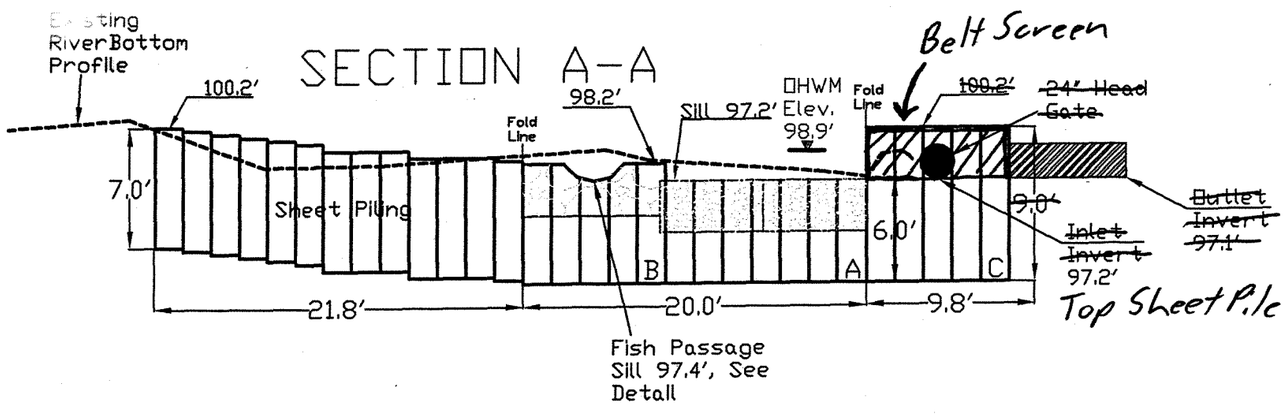

REGISTERED PROFESSIONAL ENGINEER 11,450 OREGON DECEMBER 3, 1981 GARY A. WILSON

EXPIRES 6/30/2006

Plotted 7/12/05 AS BUILT 11/30/05 JK

Grant Soil & Water Conservation District	
DRAWN BY: J. Kehrberg	DATE: 4/28/05
CHECKED BY: G. Wilson	DRAWING NO.: #2
JOB NO.: Raymond Div.	SHEET 2 OF 6

CONCRETE BOX AND STANCHION DETAIL

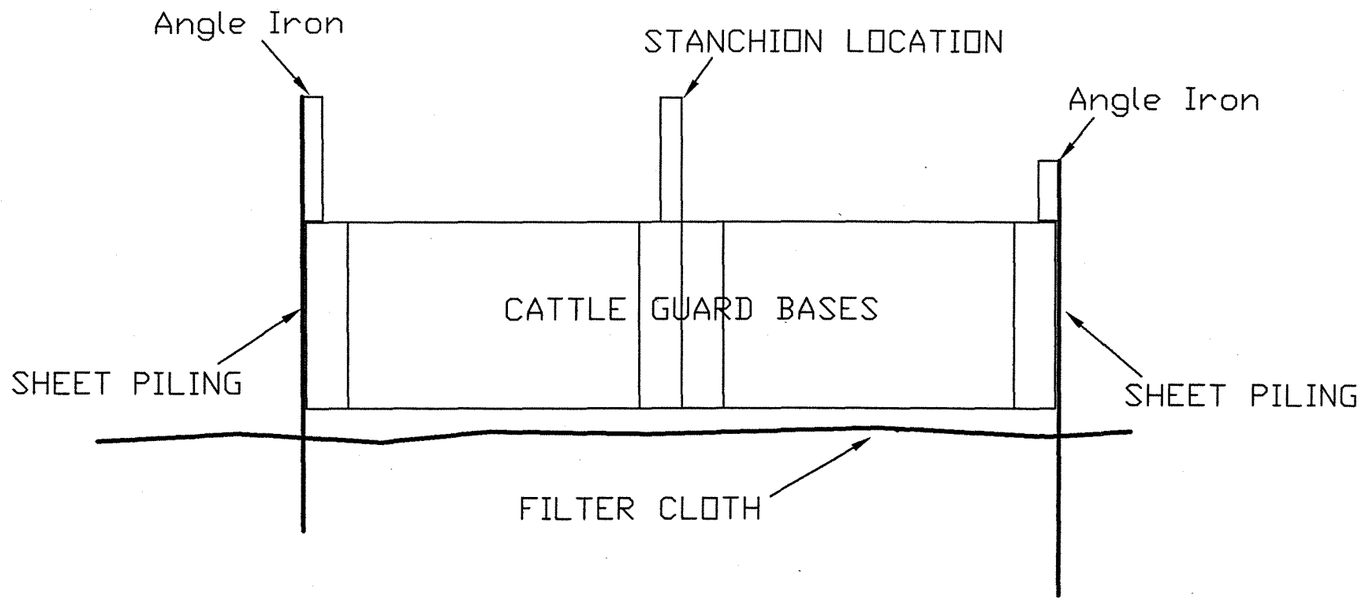

NOTE: WELD ANGLE IRON CAP TO TOP OF ALL INSTALLED SHEET PILING EXCEPT SHEET PILING THAT IS DRIVEN ACCROSS STREAM CHANNEL.

SHEET PILE PIECE CUT SCHEDULE

	LENGTH	# REQUIRED
A	6' 0"	22~~17~~ Each
B	7' 0"	18 Each
C	9' 0"	0~~8~~ Each
TOTAL LEGTH ~~273~~ LF		

258LF

SHEET PILING DETAIL

CATTLE GUARD BASES

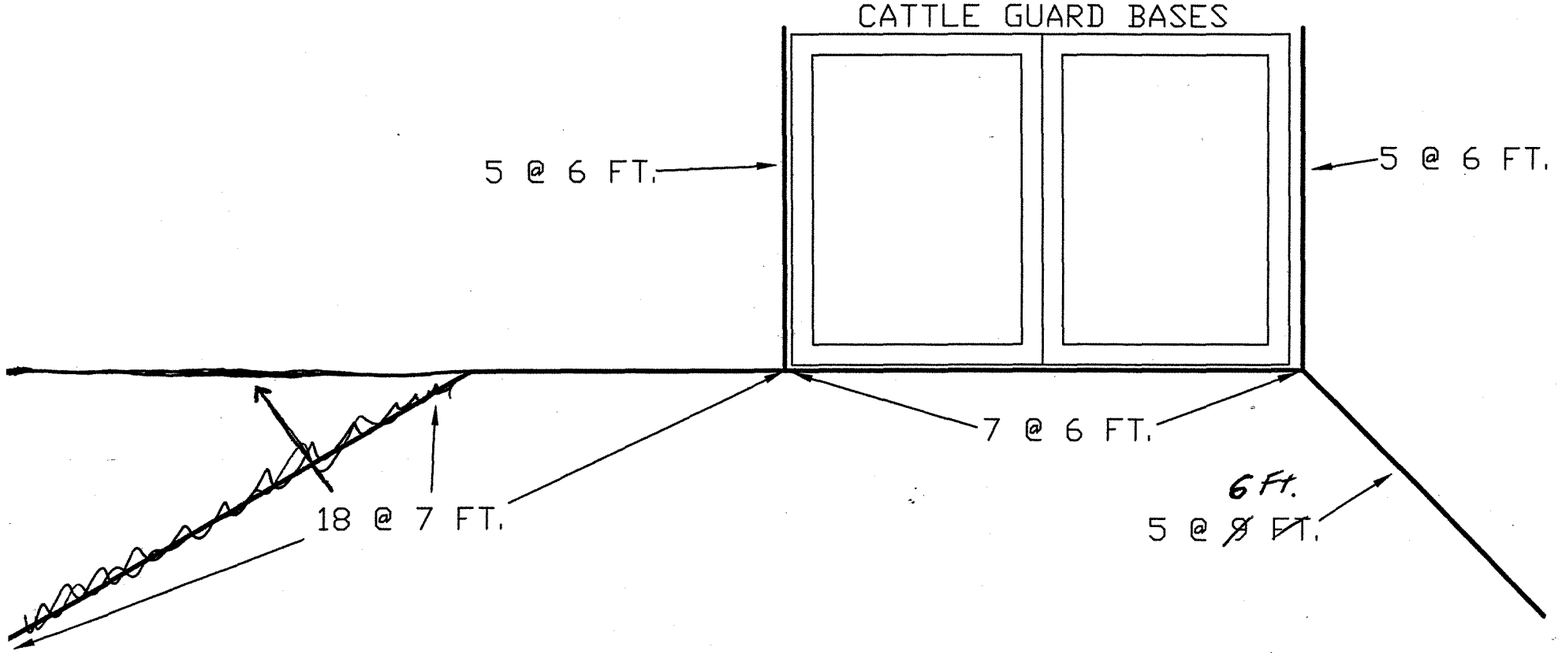

EXPIRES 6/30/2006

Plotted 5/17/05 ASBUILT 11/30/05 VK

Grant Soil & Water Conservation District	
DRAWN BY: J. Kehrberg	DATE: 4/19/05
CHECKED BY: G. Wilson	DRAWING NO.: #3
JOB NO.: Raymond Div.	SHEET 3 OF 6

PRE CAST CONCRETE BOX BOARD SUPPORT
ISOMETRIC VIEW

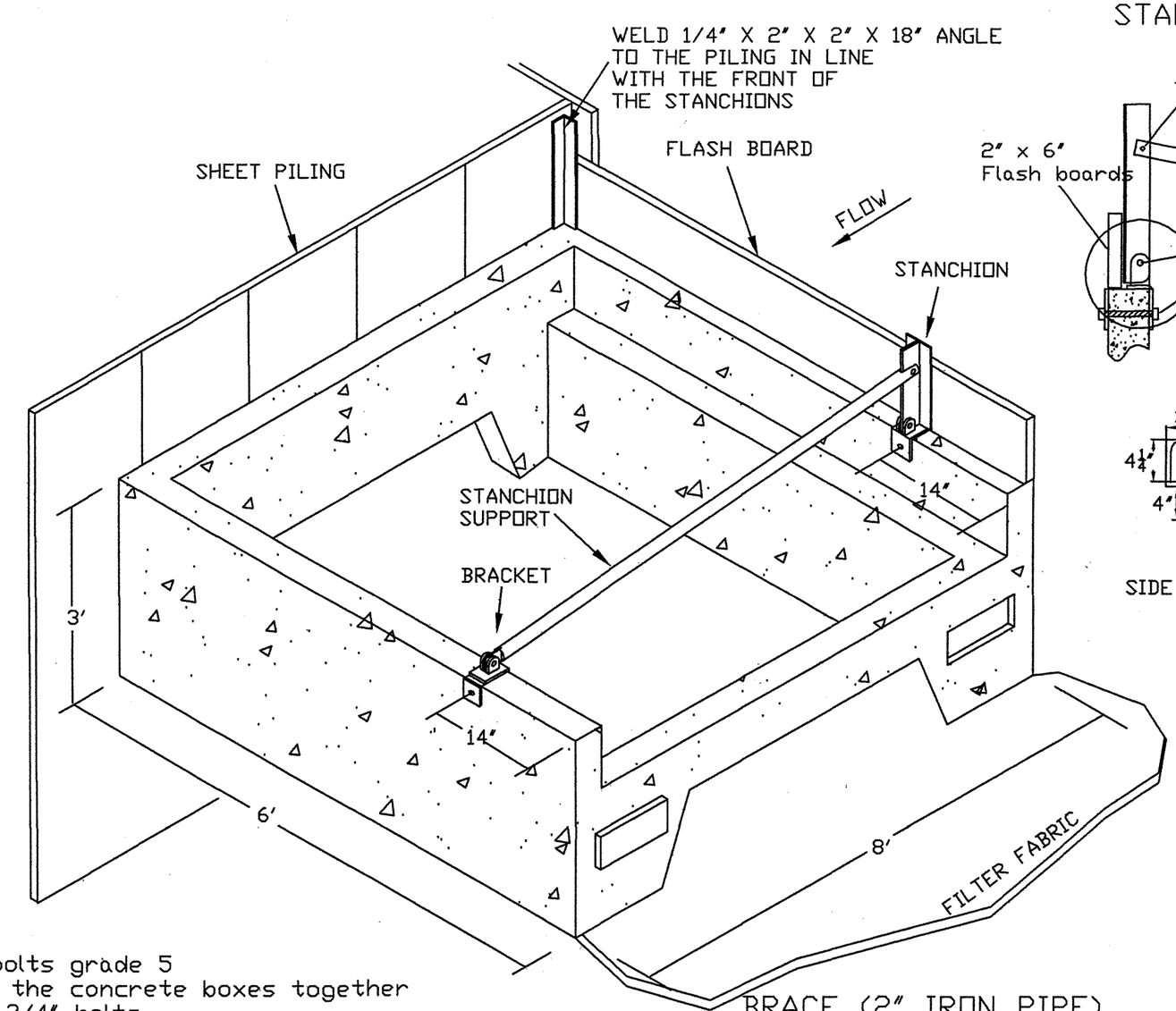

STANCHION HINGE

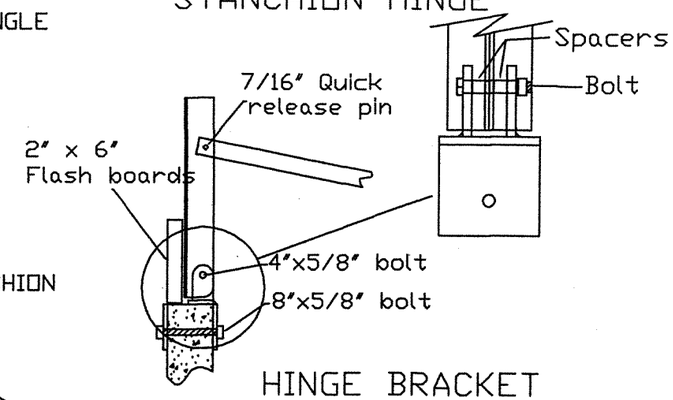

VERTICAL MEMBER

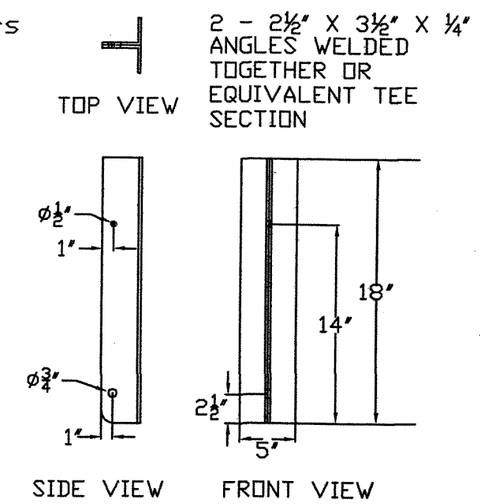

HINGE BRACKET

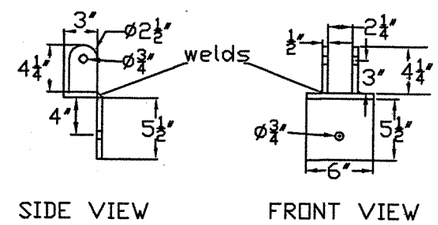

SPACERS

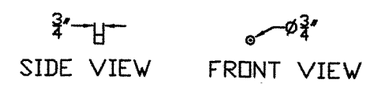

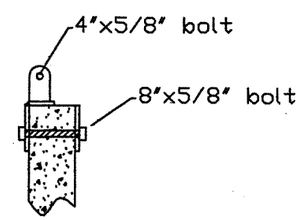

INSTALLATION DETAIL

WASHER

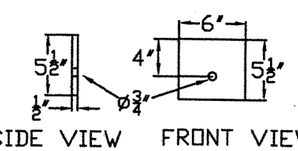

NOTES:
- All bolts grade 5
- Bolt the concrete boxes together with 3/4" bolts.
- Place boxes on filter fabric

BRACE (2" IRON PIPE)

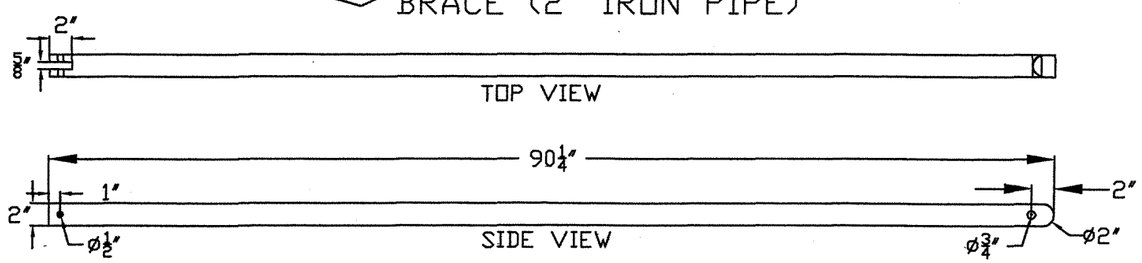

REGISTERED PROFESSIONAL ENGINEER 11,450 OREGON DECEMBER 3, 1981 GARY A. WILSON

EXPIRES 6/30/2006

Plotted 5/17/05 ASBUILT 11/30/05 JK

Grant Soil & Water Conservation District	
DRAWN BY: J. Kehrberg	DATE: 4/28/05
CHECKED BY: G. Wilson	DRAWING NO.: #4
JOB NO.: Raymond Div.	SHEET 4 OF 6

Existing Site Profiles & Cross-Sections

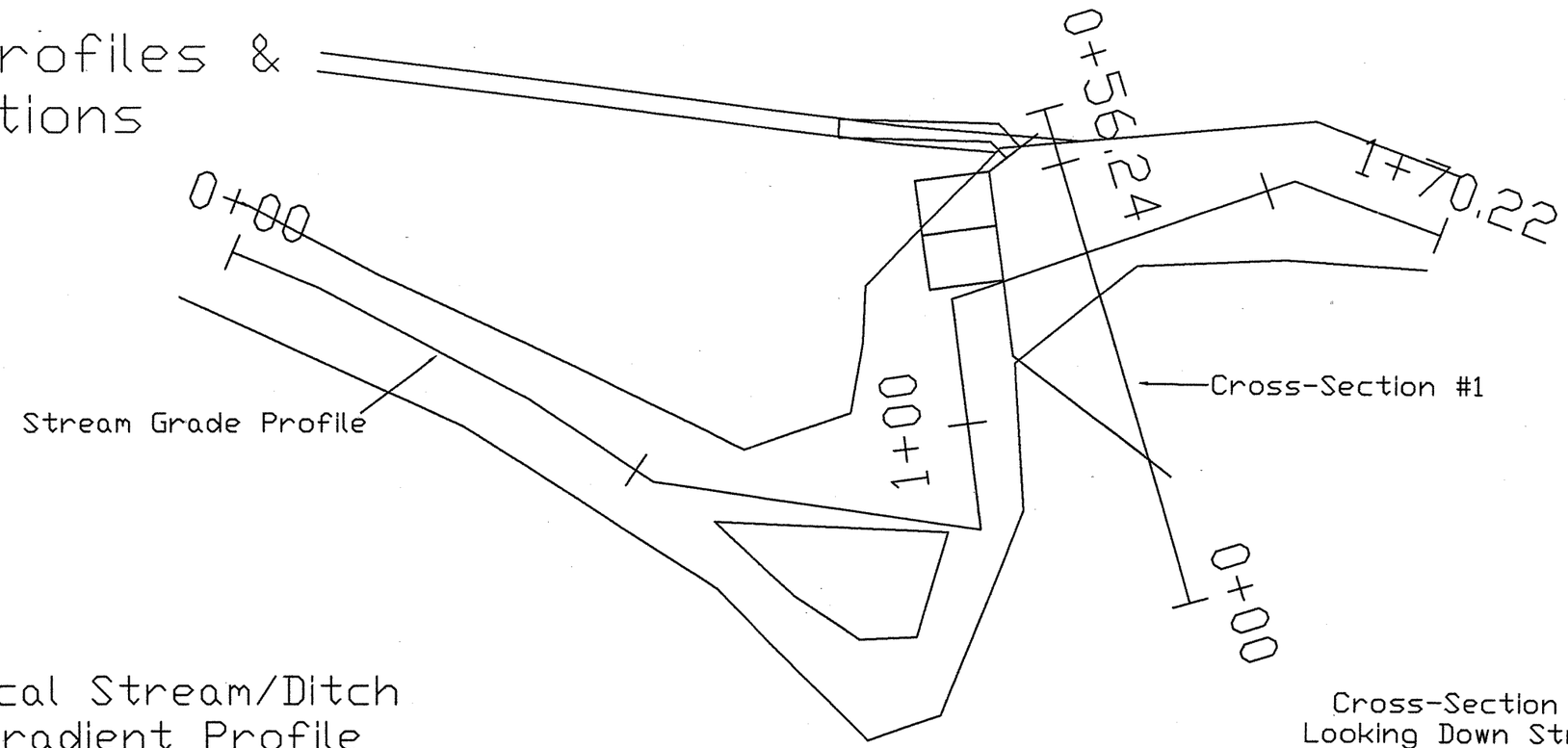

Local Stream/Ditch Gradient Profile

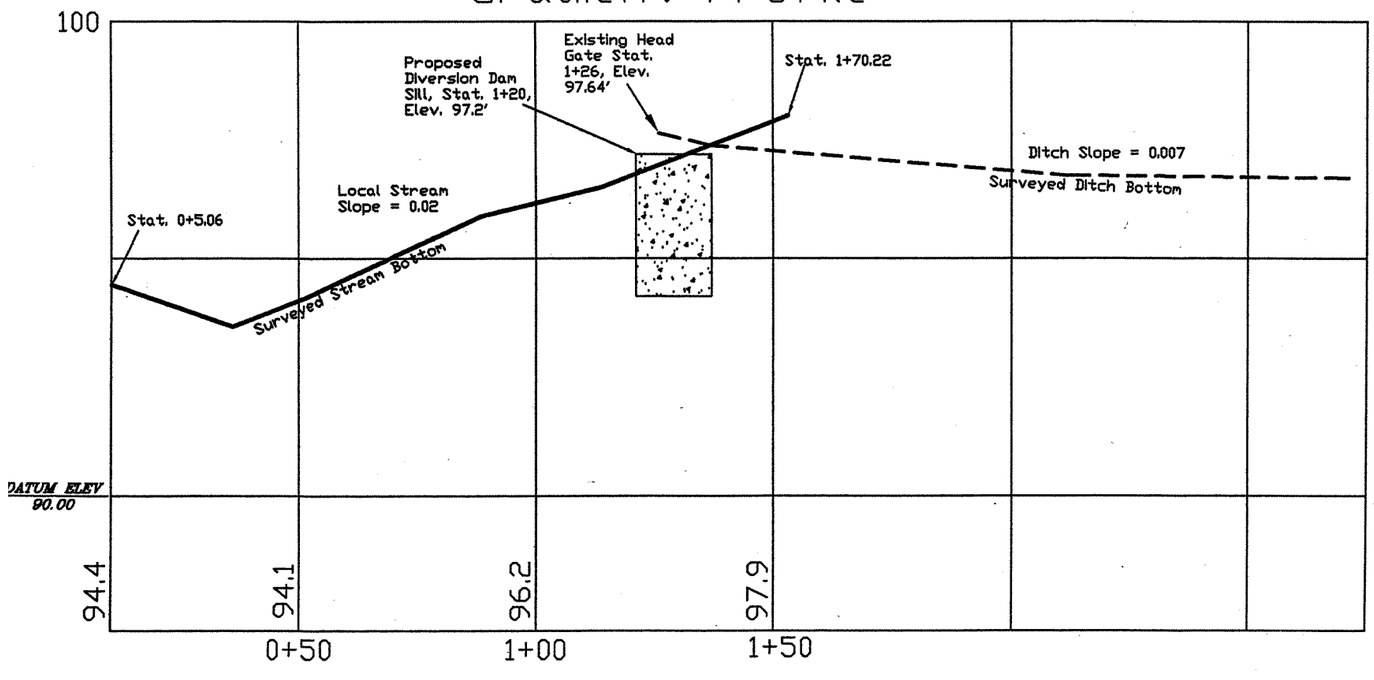

Cross-Section #1 Looking Down Stream

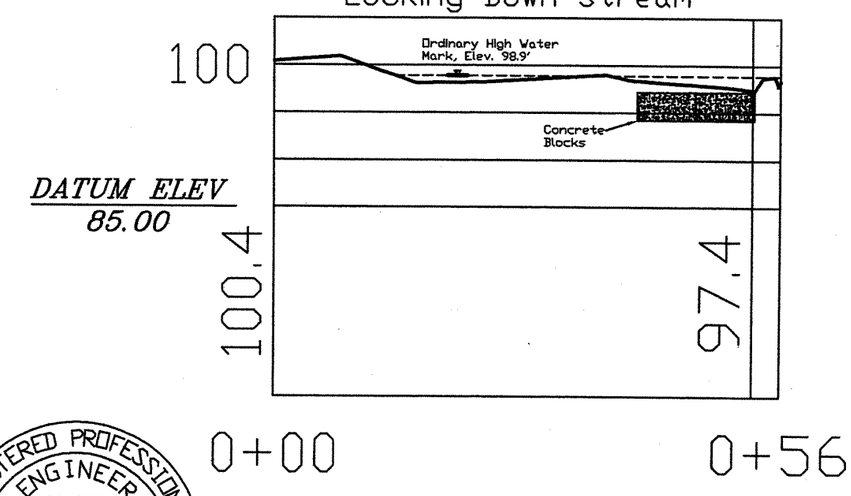

REGISTERED PROFESSIONAL ENGINEER 11,450 OREGON DECEMBER 3, 1981 GARY A. WILSON

EXPIRES 6/30/2006

Plotted 5/17/05 AS BUILT 11/30/05 JK

Grant Soil & Water Conservation District	
DRAWN BY: J. Kehrberg	DATE: 4/28/05
CHECKED BY: G. Wilson	DRAWING NO.: #5
JOB NO.: Raymond Div.	SHEET 5 OF 6

FISH PASSAGE SILL DETAIL

Note To Scale

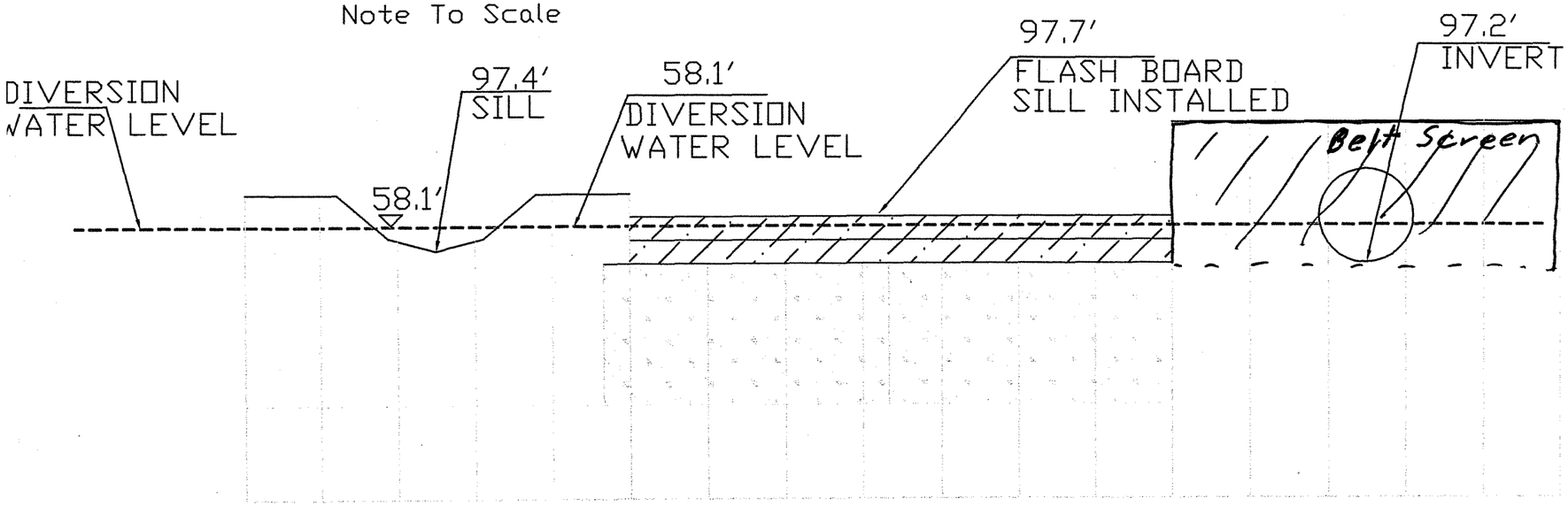

FISH PASSAGE NOTCH DETAIL

Note To Scale

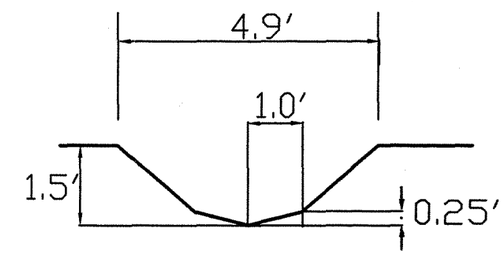

FISH PASSAGE OUTFALL DETAIL

Note To Scale

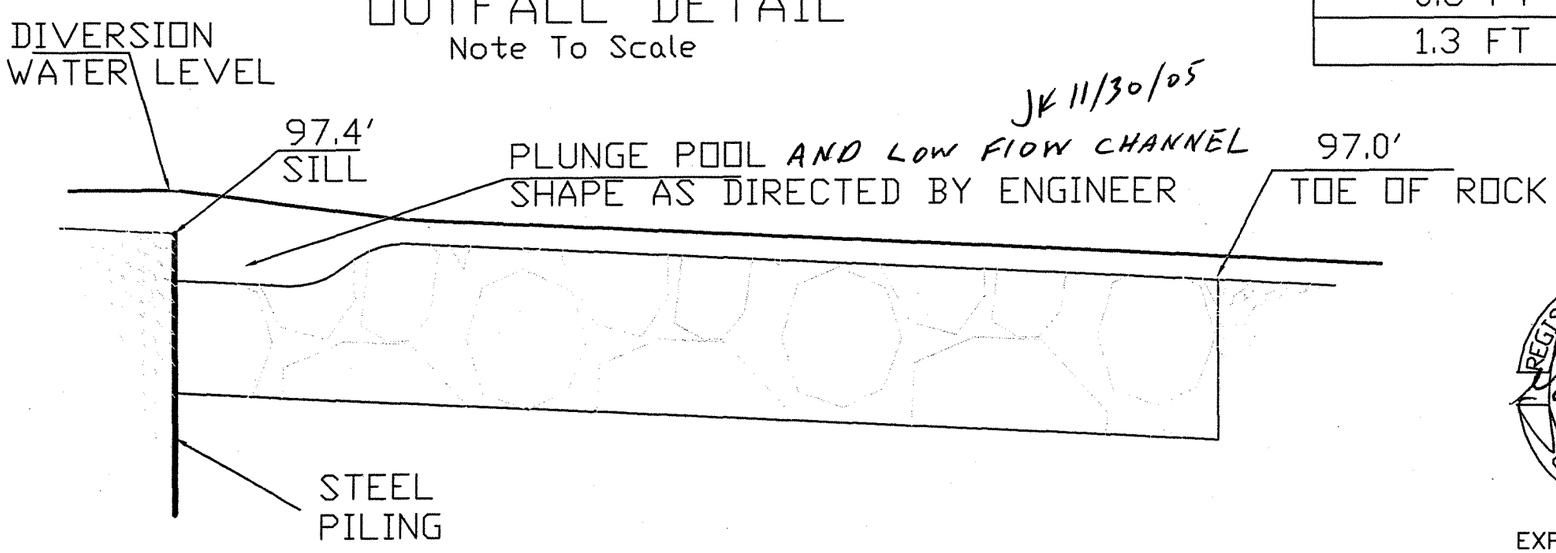

FISH PASSAGE FLOW			
FLOW DEPTH	WS ELEV.	FLOW	VELOCITY
0.8 FT	98.2 FT	4.3 CFS	2.5 FPS
1.3 FT	98.7 FT	12.8 CFS	3.3 FPS

REGISTERED PROFESSIONAL ENGINEER 11,450 OREGON DECEMBER 3, 1981 GARY A. WILSON

Gary A. Wilson

EXPIRES 6/30/2006

Plotted 5/17/05 AS BUILT 11/30/05 JK

Grant Soil & Water Conservation District	
DRAWN BY: J. Kehrberg	DATE: 4/28/05
CHECKED BY: G. Wilson	DRAWING NO.: #6
JOB NO.: Raymond Div.	SHEET 6 OF 6

RIVER DIVERSION PLAN VIEW

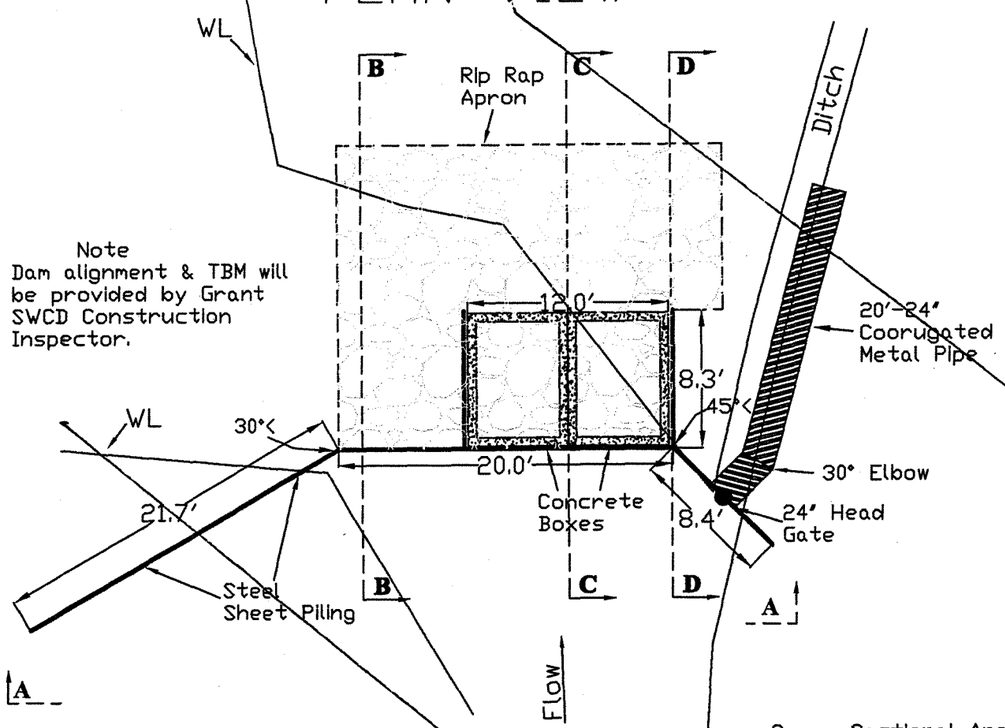

Note
Dam alignment & TBM will be provided by Grant SWCD Construction Inspector.

GRAPHIC SCALE

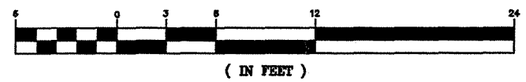

Note
1. Sheet piling will be driven or vibrated into proper position and elevation. No excavation will be allowed unless approved by the engineer.
2. Backfill concrete boxes with rip rap rock. Install rip rap apron to match existing stream gradient. Shape the channel and plunge pool below the fish passage opening as directed by the engineer to concentrate low flows, allowing for fish to move past the structure.

Cross-Sectional Area Above Existing Diversion

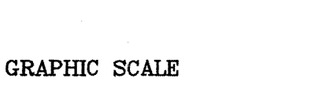

Proposed Cross-Sectional Area Through New Structure

SECTION B-B

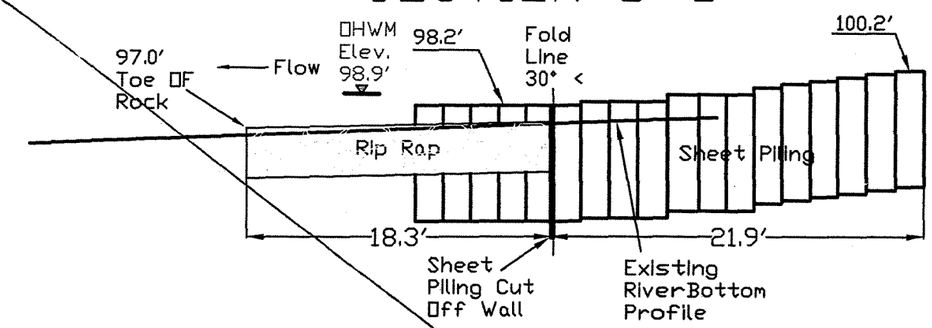

SECTION C-C

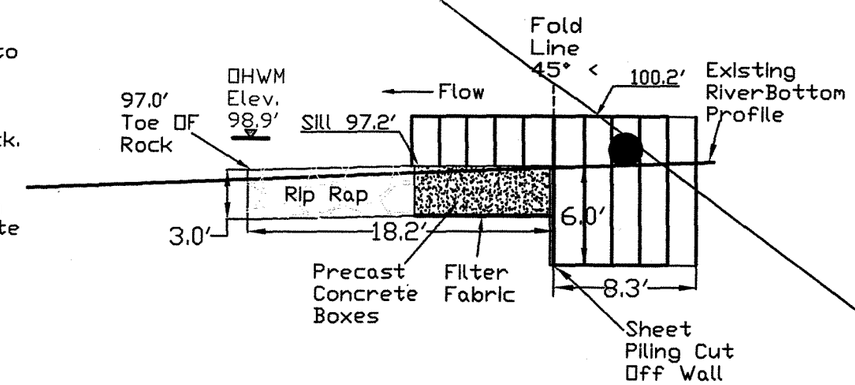

SECTION D-D

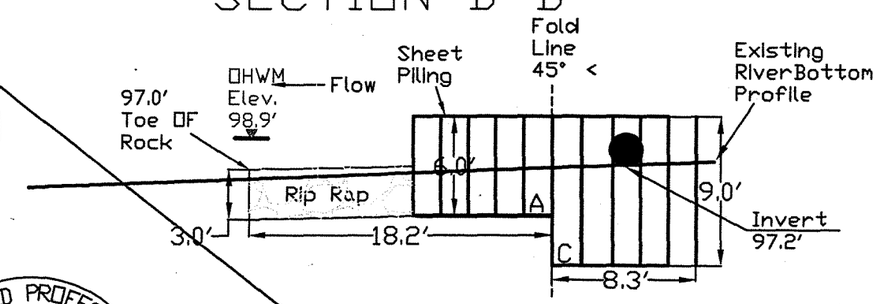

SECTION A-A

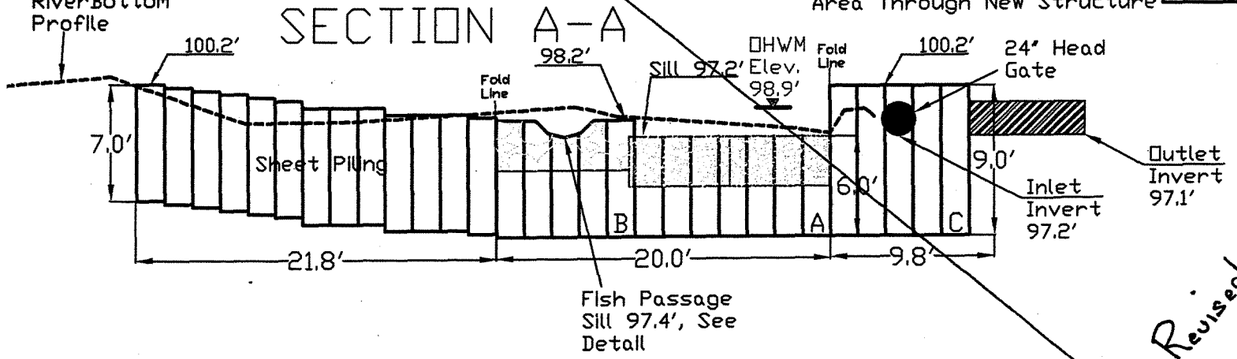

Revised: See New Sheet 7/12/05

REGISTERED PROFESSIONAL ENGINEER 11,450 OREGON DECEMBER 3, 1981 GARY A. WILSON

Gary A. Wilson

EXPIRES 6/30/2006

Plotted 5/17/05

Grant Soil & Water Conservation District	
DRAWN BY: J. Kehrberg	DATE: 4/28/05
CHECKED BY: G. Wilson	DRAWING NO.: #2
JOB NO.: Raymond Div.	SHEET 2 OF 6