Grant Soil and Water Conservation District
721 S. Canyon Blvd. - John Day, Oregon 97845 - Phone (541) 575-0135 - Fax (541) 575-0046

BUREAU OF RECLAMATION
OFFICIAL FILE COPY
JUN 05 '06

TO	INIT	DATE

CONTROL #:
FOLDER #:

May 31, 2006

US Bureau of Reclamation
P.O. Box 909, Patterson Bridge Rd
John Day OR 97845
Attn: Mark L. Croghan, Subbasin Liaison

US Bureau of Reclamation
1150 N. Curtis Road, Suite 100
Boise ID 83706-1234
X Attn: Lisa V. Wuttke

Subject: **As-Built Drawing Submittal**
Contract No. 03CA101530
Task Order No. 03A7101530 (Task 7) – Harlan Pump Station
Task Order No. 03B3101530 (Task 13) – Gillespie Pump Station

Enclosed are the As-Built Drawings for the Harlan Pump Station and the Gillespie Pump Station. These two pump stations were installed to eliminate three annually installed irrigation gravel push-up dams.

These projects were completed this spring and currently in operation.

If you have any questions or comments regarding this design or submittal please don't hesitate to give me a call (541) 575-0135 ext 106.

Sincerely,

Gary A. Wilson

Gary A. Wilson PE
District Engineer

LOCATION MAP

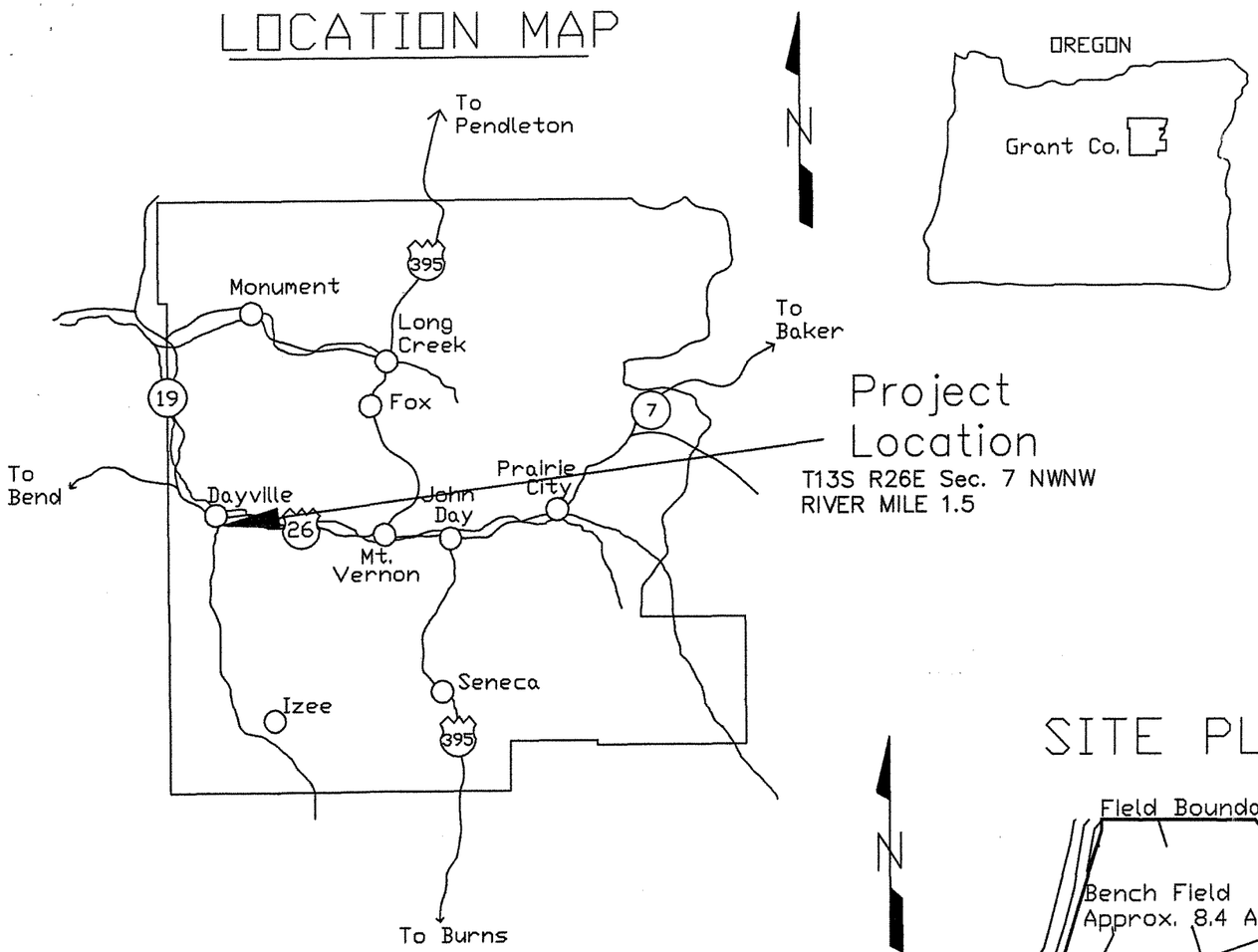

SITE PLAN

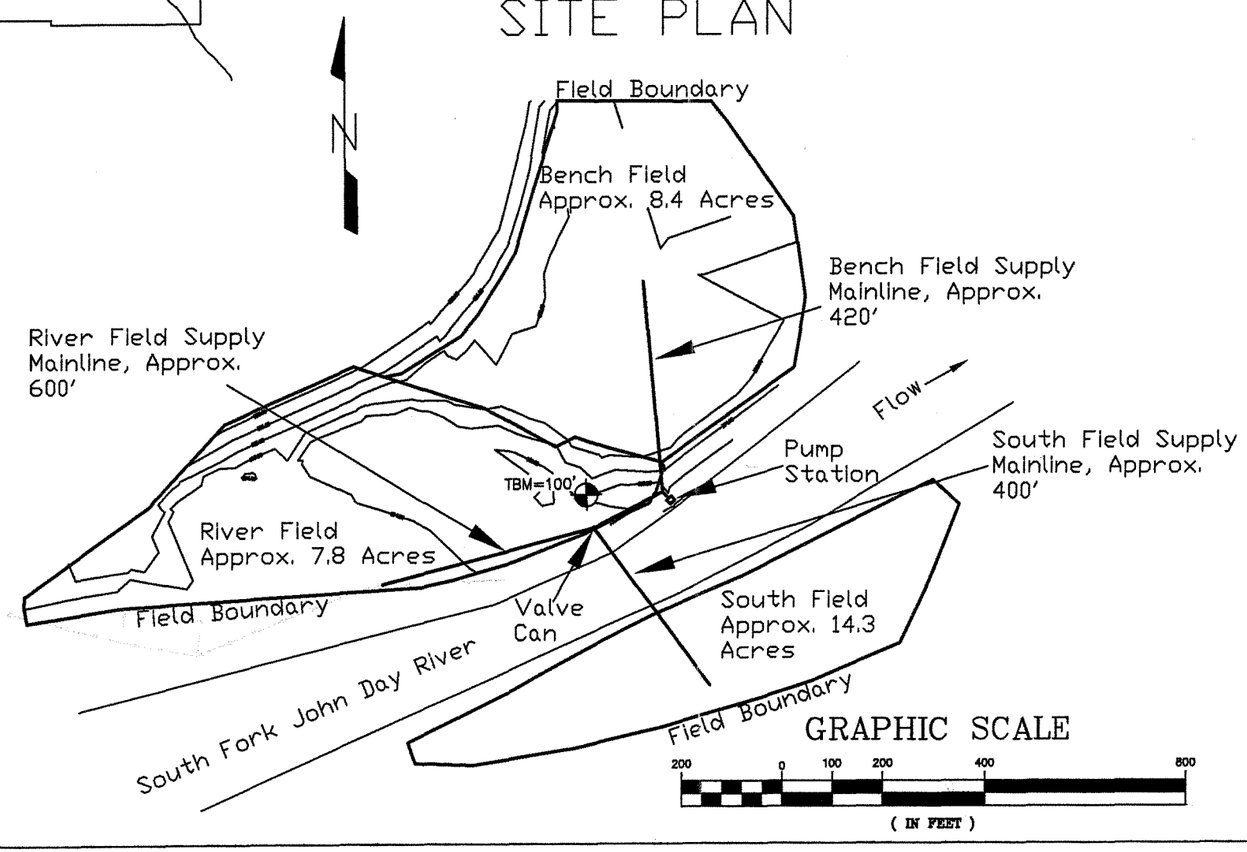

REGISTERED PROFESSIONAL ENGINEER
11,450
OREGON
DECEMBER 3, 1981
GARY A. WILSON

EXPIRES 6/30/2006

Plotted 11/22/05

As-Built 5/26/06

		DATE
DESIGNED	J. Kehrberg	9/05
PLOTTED	J. Kehrberg	9/05
CHECKED	G. Wilson	
APPROVED		

HARLAN PUMP STATION PROJECT
LOCATION MAP & SITE PLAN
GRANT COUNTY, OREGON

GRANT SOIL & WATER CONSERVATION DISTRICT

CADFILE
HarlanPump
Station

SHEET 1
OF 10

IRRIGATION DELIVERY SYSTEM PLAN VIEW

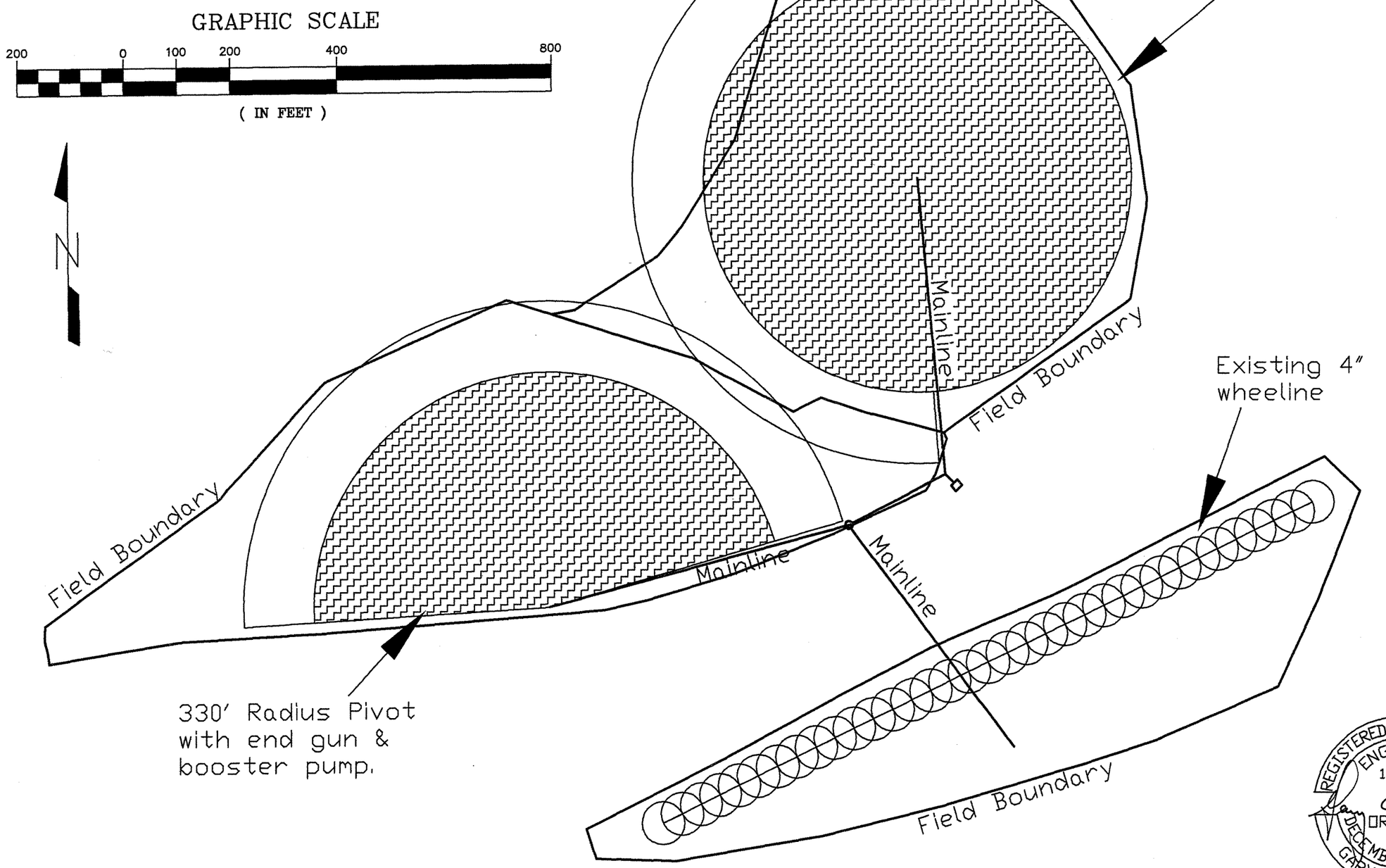

REGISTERED PROFESSIONAL ENGINEER 11,450 OREGON DECEMBER 3, 1981 GARY A. WILSON

EXPIRES 6/30/2006

Plotted 11/22/05

As-Built 5/26/06

		DATE
DESIGNED	J. Kehrberg	9/05
PLOTTED	J. Kehrberg	9/05
CHECKED	G. Wilson	
APPROVED		

HARLAN PUMP STATION PROJECT
IRRGATION SYSTEM SITE PLAN
GRANT COUNTY, OREGON

GRANT SOIL & WATER CONSERVATION DISTRICT

CADFILE
HarlanPump Station

SHEET 2 OF 10

BENCH FIELD MAINLINE ALIGNMENT
STATION 0+00-4+16

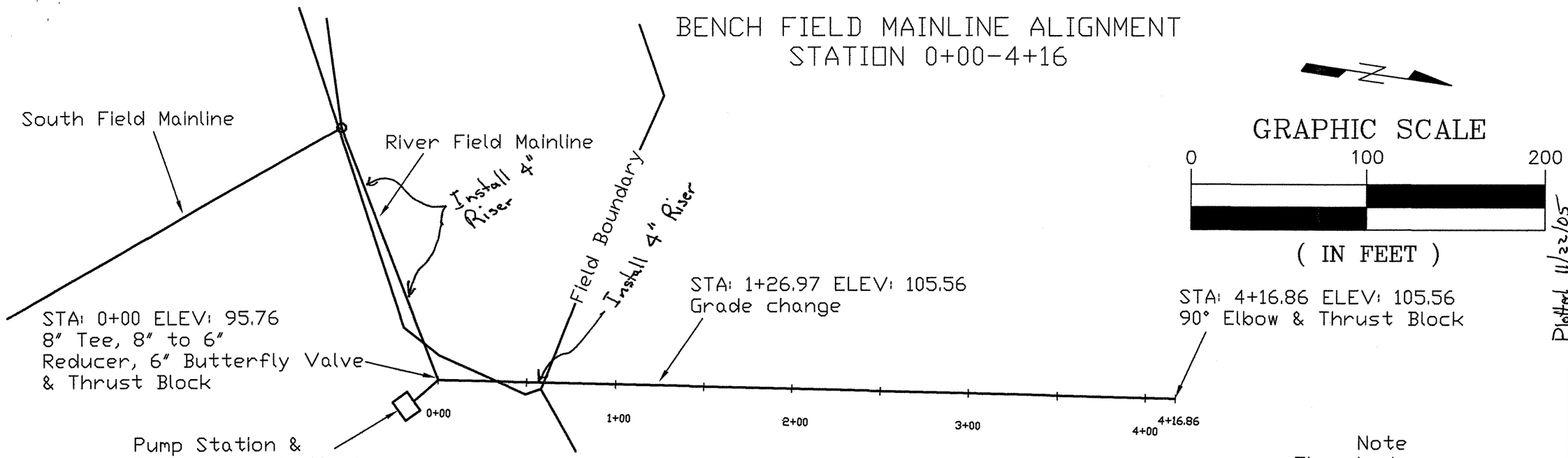

GRAPHIC SCALE

0 100 200

(IN FEET)

Note
The pivot power supply line will be placed in mainline trench.

BENCH FIELD MAINLINE PROFILE DETAIL
STATION 0+00-4+16

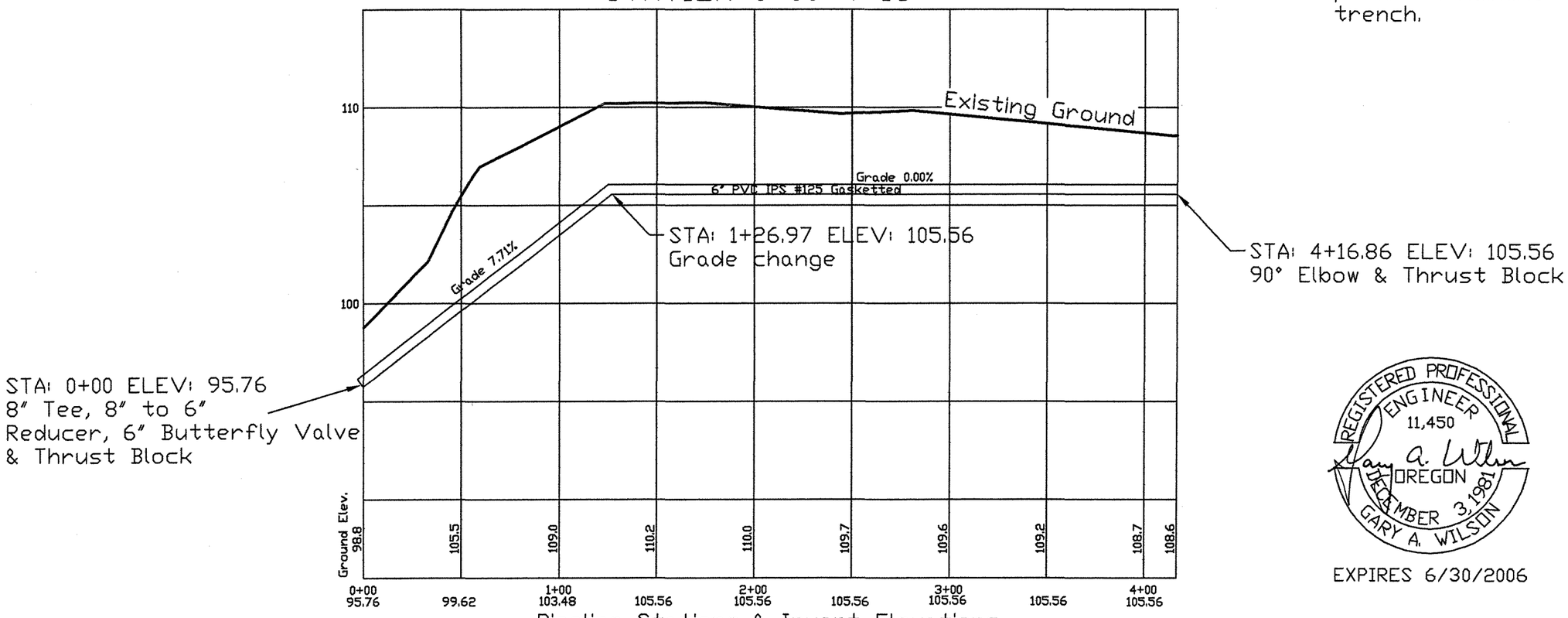

REGISTERED PROFESSIONAL ENGINEER
11,450
OREGON
DECEMBER 3, 1981
GARY A. WILSON

EXPIRES 6/30/2006

As-Built 5/26/06

Plotted 11/22/05

		DATE
DESIGNED	J. Kehrberg	9/05
PLOTTED	J. Kehrberg	9/05
CHECKED	G. Wilson	
APPROVED		

HARLAN PUMP STATION PROJECT
BENCH FIELD MAINLINE PROFILE DETAILS
GRANT COUNTY, OREGON

GRANT SOIL & WATER CONSERVATION DISTRICT

CADFILE
HarlanPump
Station

SHEET 3
OF 10

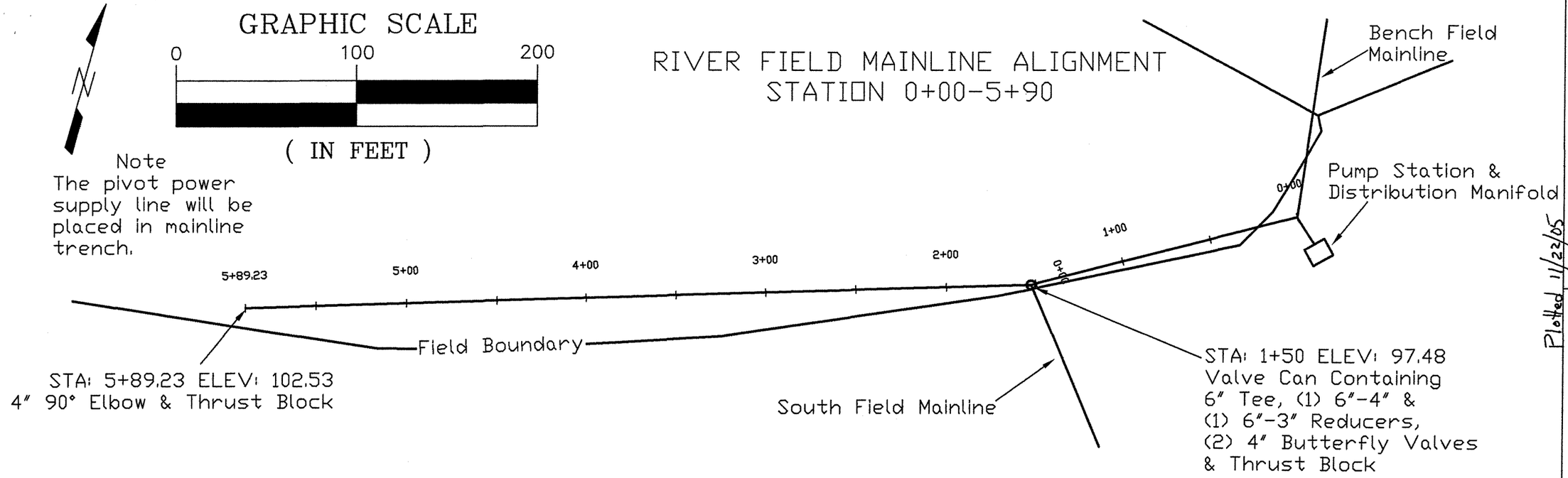

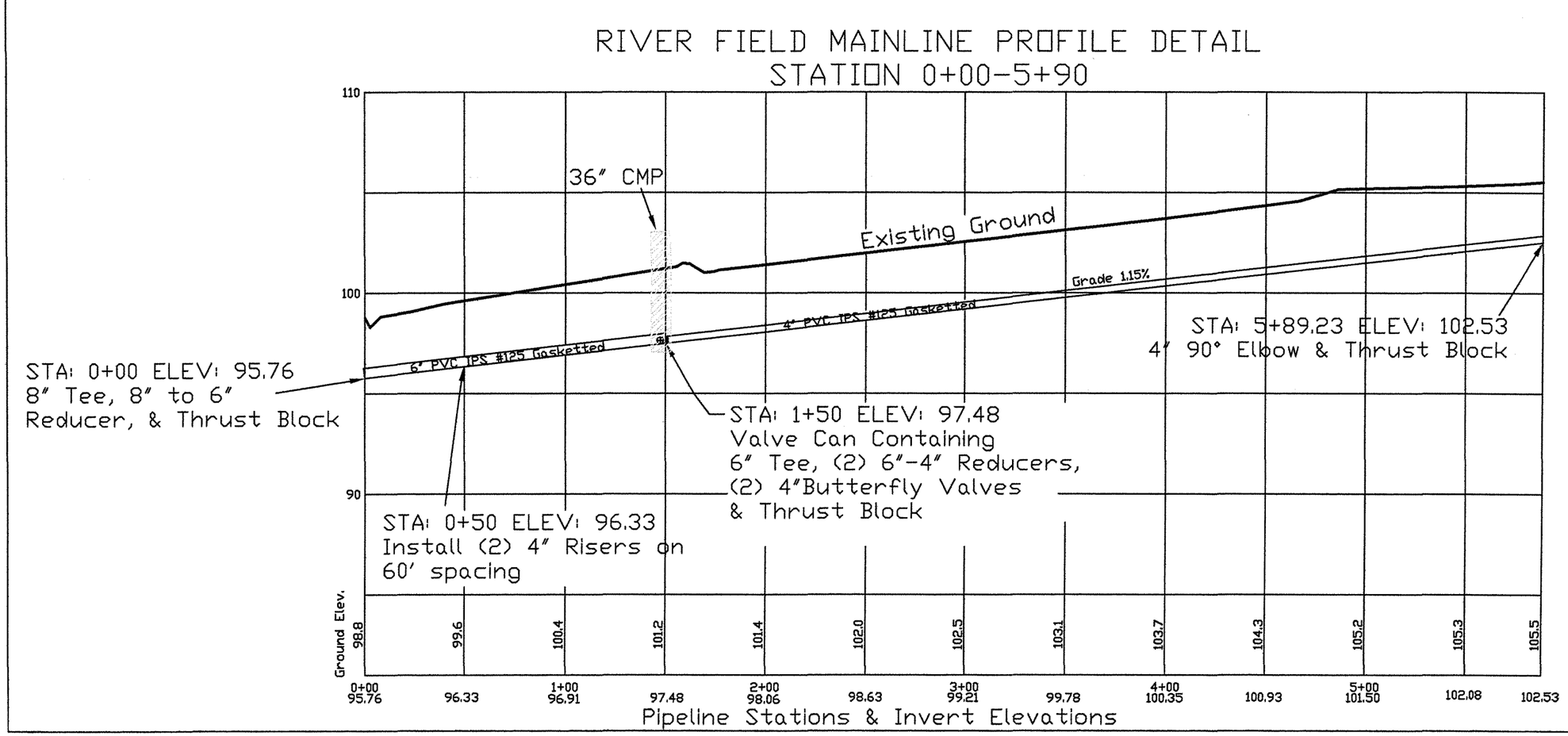

REGISTERED PROFESSIONAL ENGINEER
11,450
OREGON
DECEMBER 3, 1981
GARY A. WILSON

EXPIRES 6/30/2006

Plotted 11/22/05

		DATE
DESIGNED	J. Kehrberg	9/05
PLOTTED	J. Kehrberg	9/05
CHECKED	G. Wilson	
APPROVED		

HARLAN PUMP STATION PROJECT
RIVER FIELD MAINLINE PROFILE DETAILS
GRANT COUNTY, OREGON

GRANT SOIL & WATER CONSERVATION DISTRICT

CADFILE
HarlanPump Station

SHEET 4
OF 10

SOUTH FIELD MAINLINE ALIGNMENT
STATION 0+00-3+90

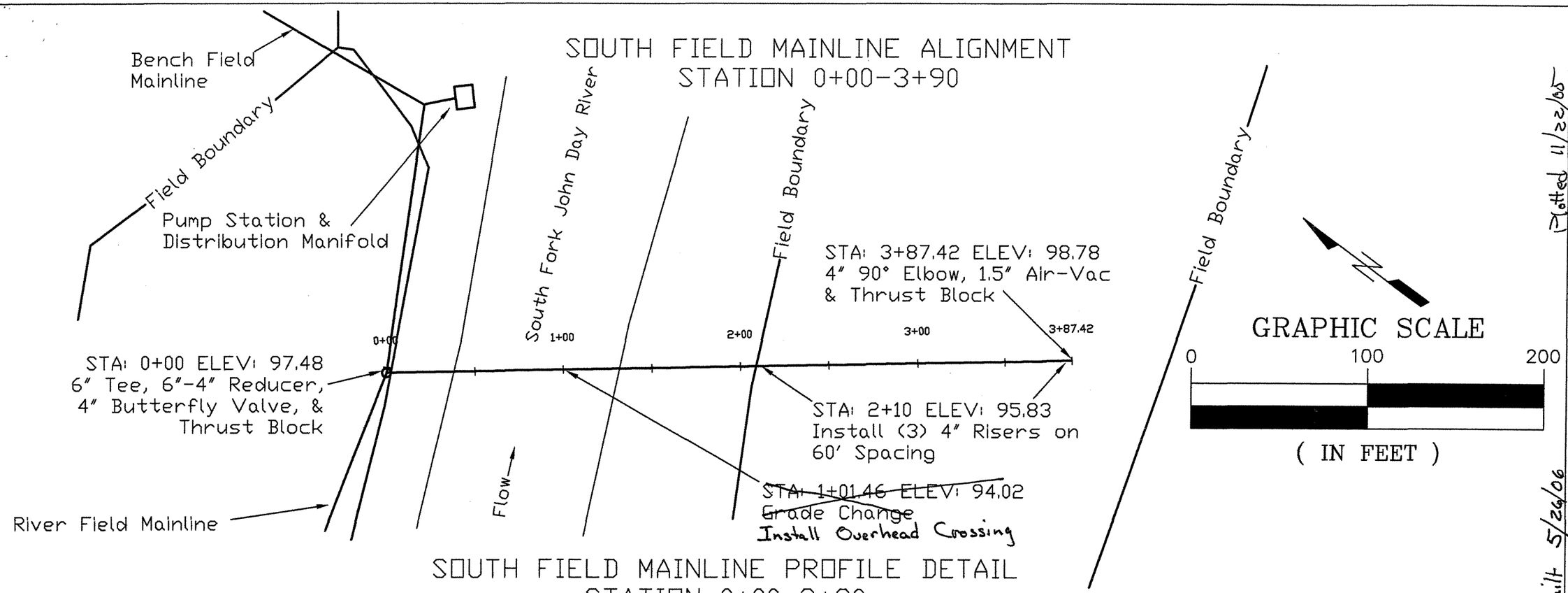

SOUTH FIELD MAINLINE PROFILE DETAIL
STATION 0+00-3+90

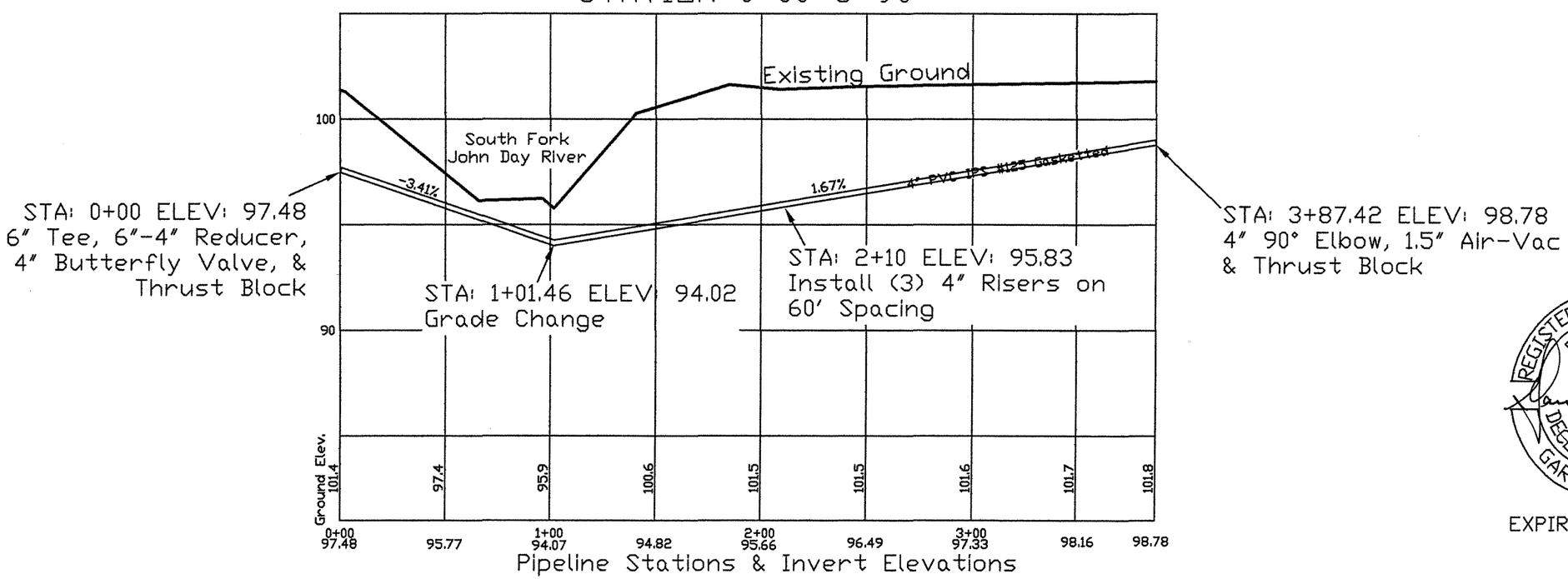

REGISTERED PROFESSIONAL ENGINEER 11,450 OREGON DECEMBER 3, 1981 GARY A. WILSON

EXPIRES 6/30/2006

As-Built 5/26/06

Plotted 11/22/05

		DATE
DESIGNED	J. Kehrberg	9/05
PLOTTED	J. Kehrberg	9/05
CHECKED	G. Wilson	
APPROVED		

HARLAN PUMP STATION PROJECT
SOUTH FIELD MAINLINE PROFILE DETAILS
GRANT COUNTY, OREGON

GRANT SOIL & WATER CONSERVATION DISTRICT

CADFILE
HarlanPump
Station

SHEET 5
OF 10

THRUST BLOCK DETAILS
NOT TO SCALE

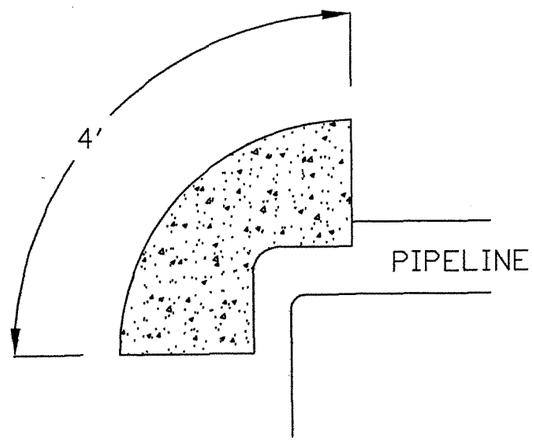

TYPICAL TEE PLAN VIEW

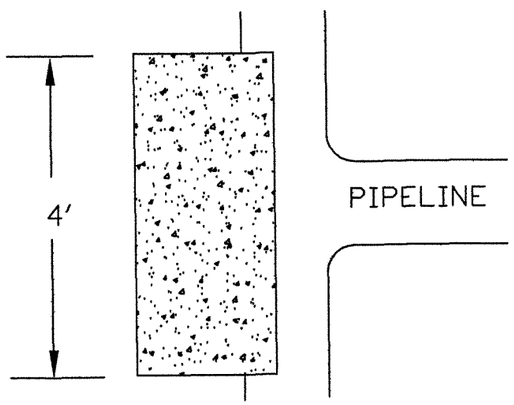

ELEVATION VIEW BOTH TYPES

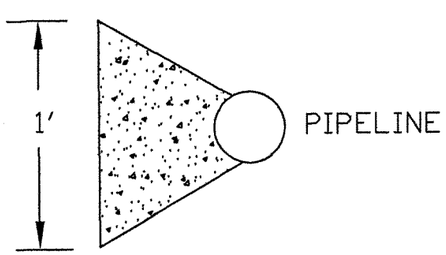

TYPICAL DRAIN DETAIL ELEVATION VIEW
NOT TO SCALE

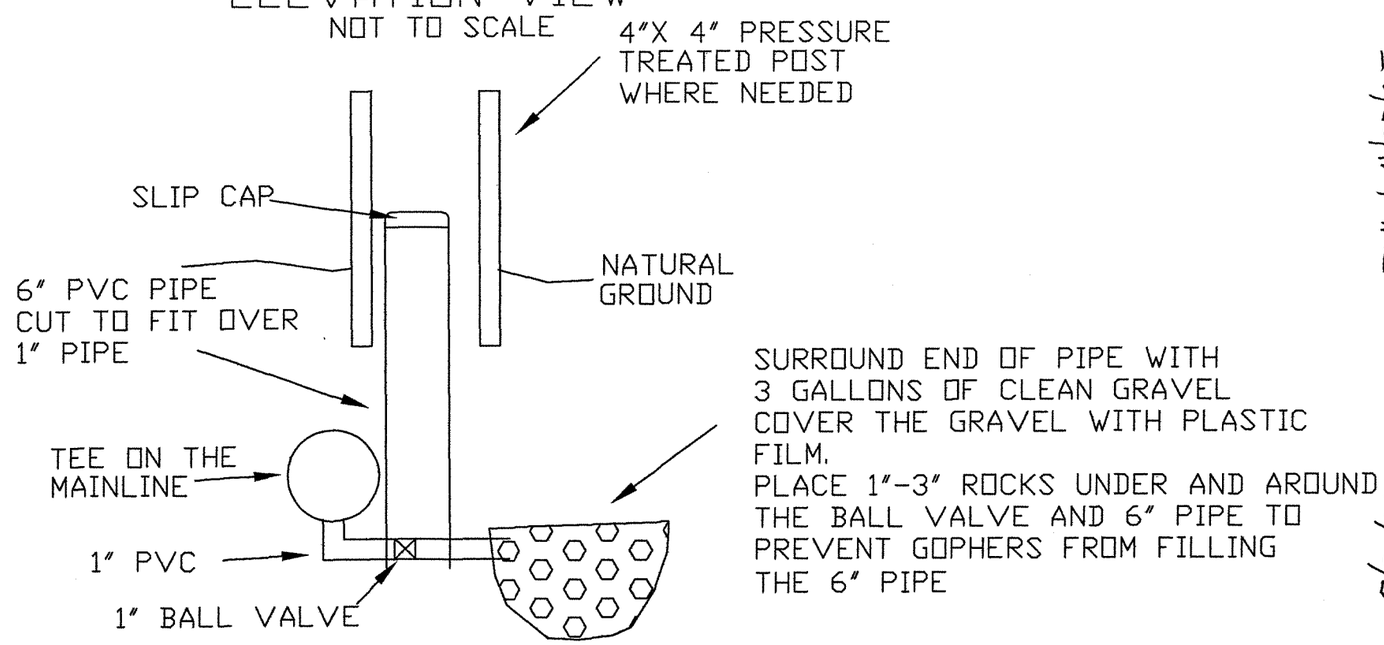

END OF PIPELINES DETAIL

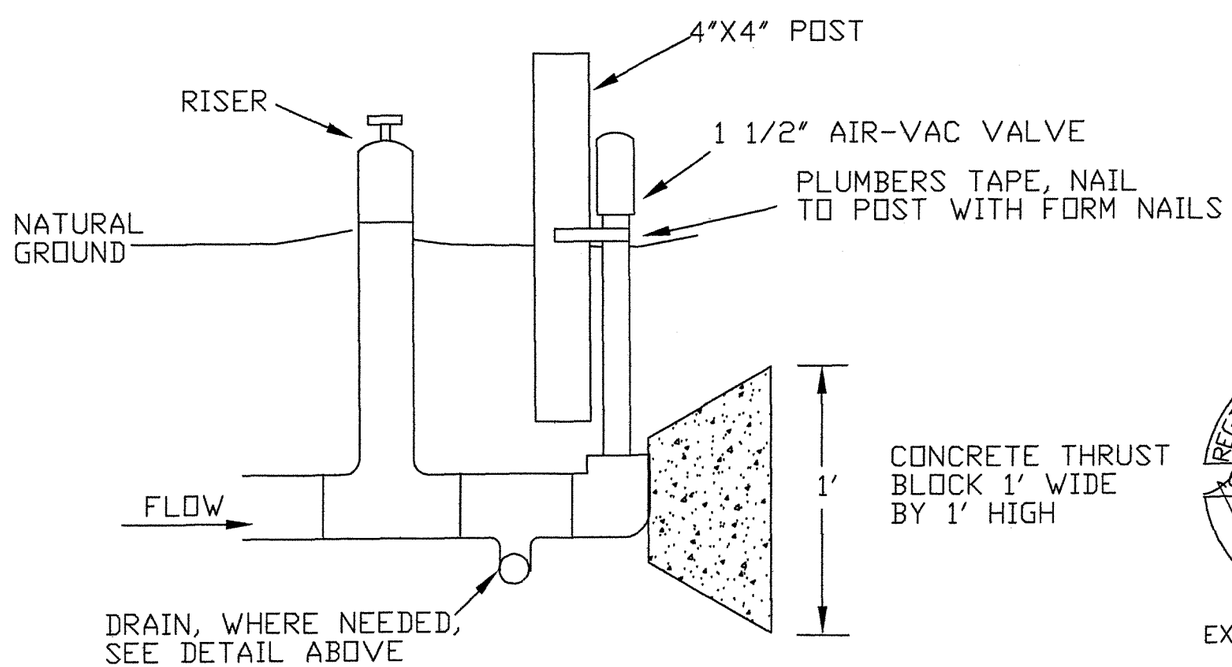

REGISTERED PROFESSIONAL ENGINEER 11,450 OREGON DECEMBER 3, 1981 GARY A. WILSON

EXPIRES 6/30/2006

As-Built 5/26/06

Plotted 11/22/05

		DATE
DESIGNED	J. Kehrberg	9/05
PLOTTED	J. Kehrberg	9/05
CHECKED	G. Wilson	
APPROVED		

HARLAN PUMP STATION PROJECT
THRUST BLOCK & DRAIN DETAILS
GRANT COUNTY, OREGON

GRANT SOIL & WATER CONSERVATION DISTRICT

CADFILE HarlanPump Station

SHEET 6 OF 10

VALVE CAN ELEVATION VIEW
NOT TO SCALE

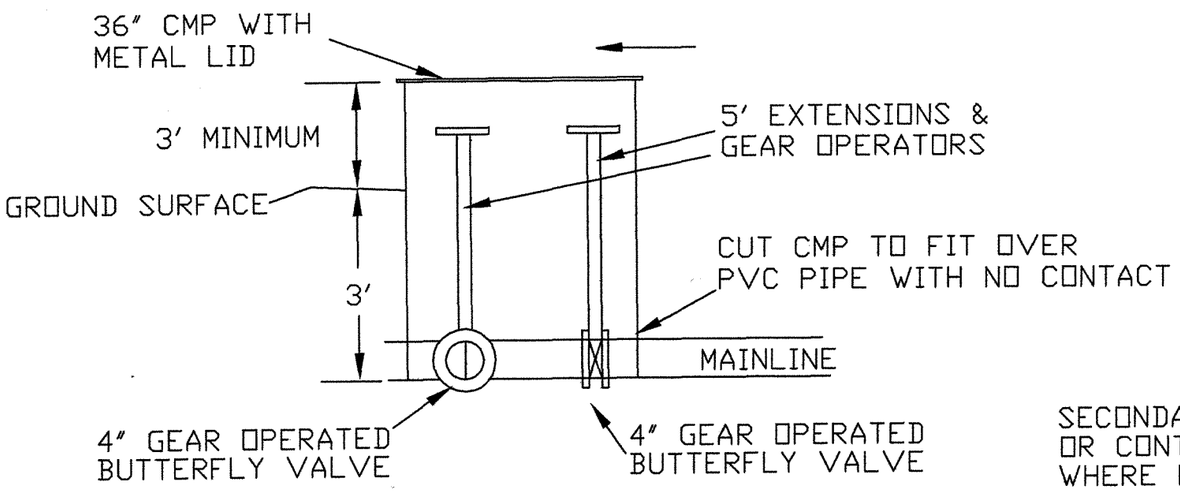

MAINLINE TRENCH DETAIL
NOT TO SCALE

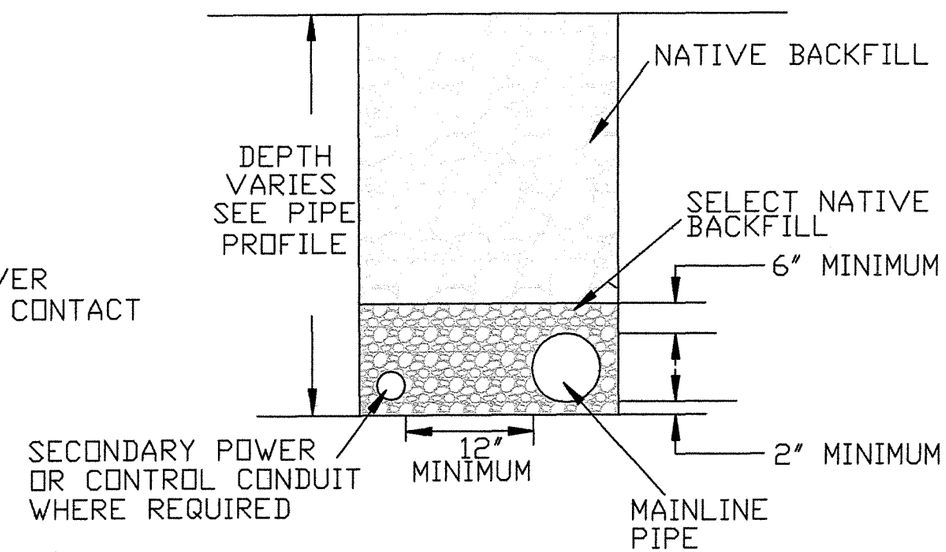

INLINE VALVE ASSEMBLY RIVER FIELD STA: 1+50 PLAN VIEW

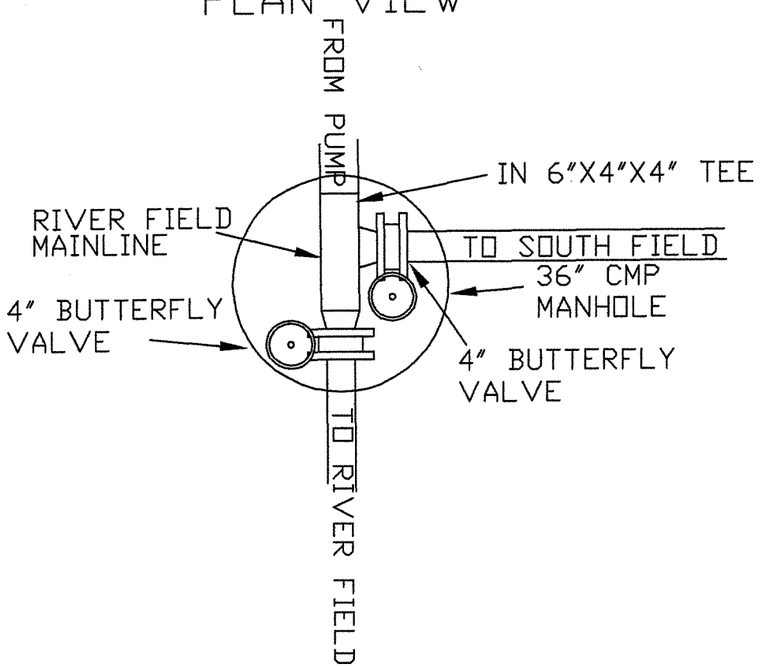

PRIMARY POWER TRENCH DETAIL
NOT TO SCALE

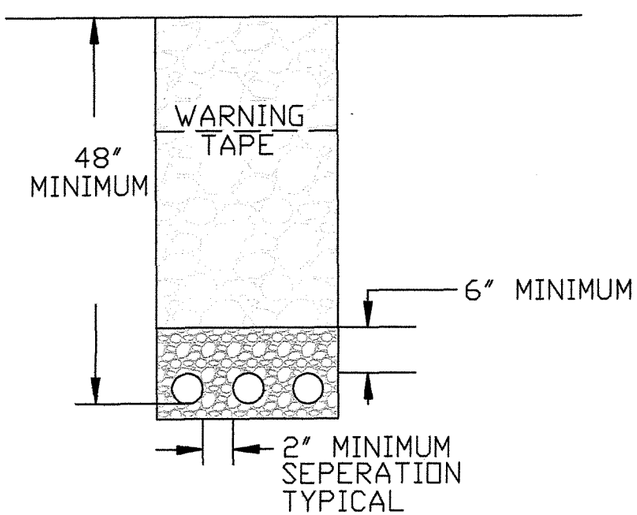

REGISTERED PROFESSIONAL ENGINEER 11,450 OREGON DECEMBER 3, 1981 GARY A. WILSON

EXPIRES 6/30/2006

As-Built 5/26/06

Plotted 11/22/06

		DATE
DESIGNED	J. Kehrberg	9/05
PLOTTED	J. Kehrberg	9/05
CHECKED	G. Wilson	
APPROVED		

HARLAN PUMP STATION
VALVE CAN DETAIL
GRANT COUNTY, OREGON

GRANT SOIL & WATER CONSERVATION DISTRICT

CADFILE HarlanPump Station

SHEET 7 OF 10

PUMP STATION SITE PLAN

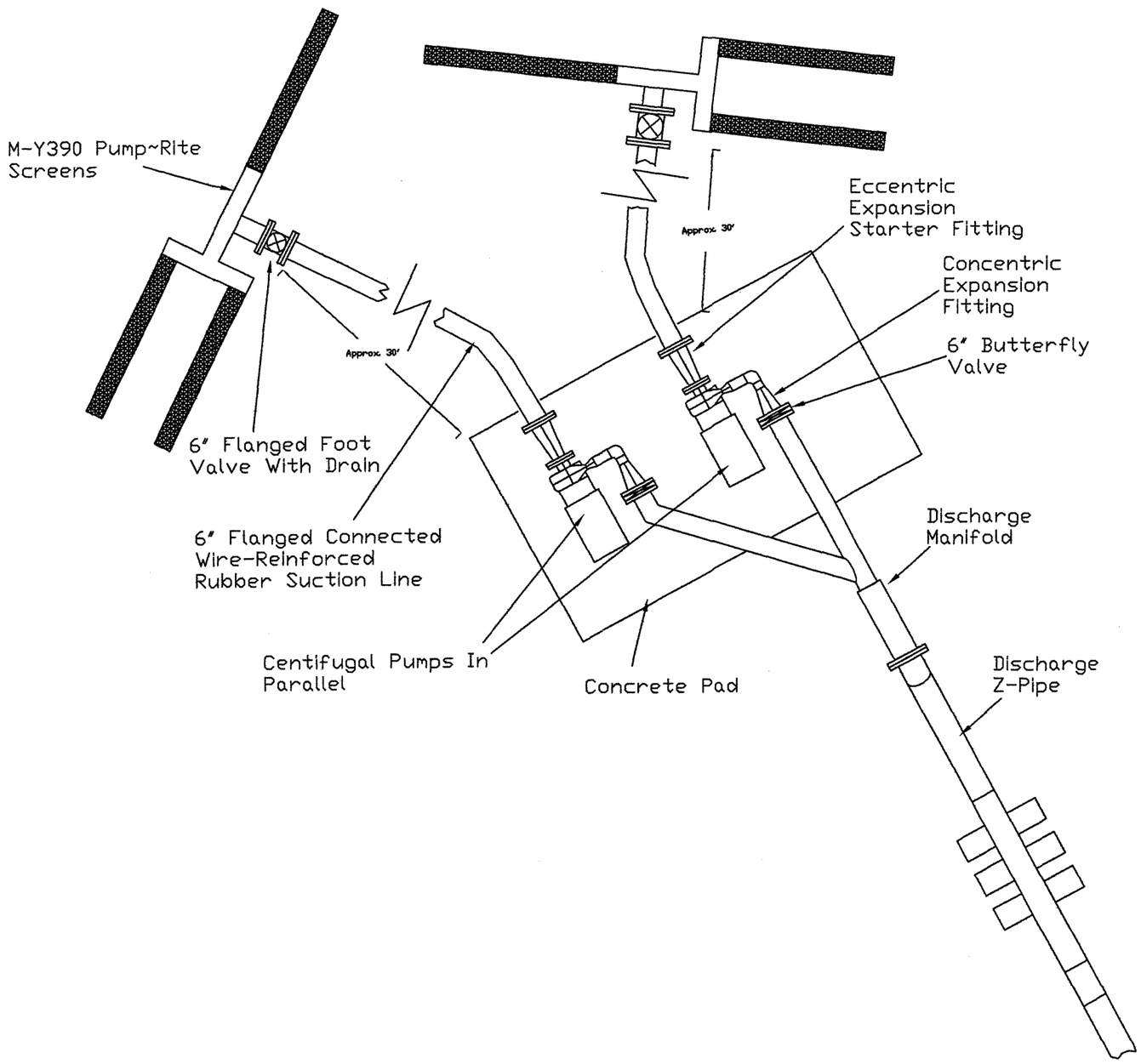

PUMP WELD PLATES

2 Needed

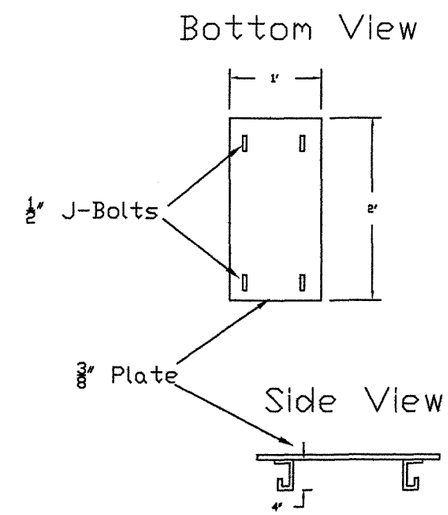

REGISTERED PROFESSIONAL ENGINEER 11,450 OREGON DECEMBER 3, 1981 GARY A. WILSON

EXPIRES 6/30/2006

Plotted 11/22/05

As-Built 5/26/06

		DATE
DESIGNED	J. Kehrberg	9/05
PLOTTED	J. Kehrberg	9/05
CHECKED	G. Wilson	
APPROVED		

HARLAN PUMP STATION PROJECT
PUMP STATION PLAN VIEW DETAIL
GRANT COUNTY, OREGON

GRANT SOIL & WATER CONSERVATION DISTRICT

CADFILE
HarlanPump Station

SHEET 8 OF 10

DISCHARGE Z-PIPE
1 Needed

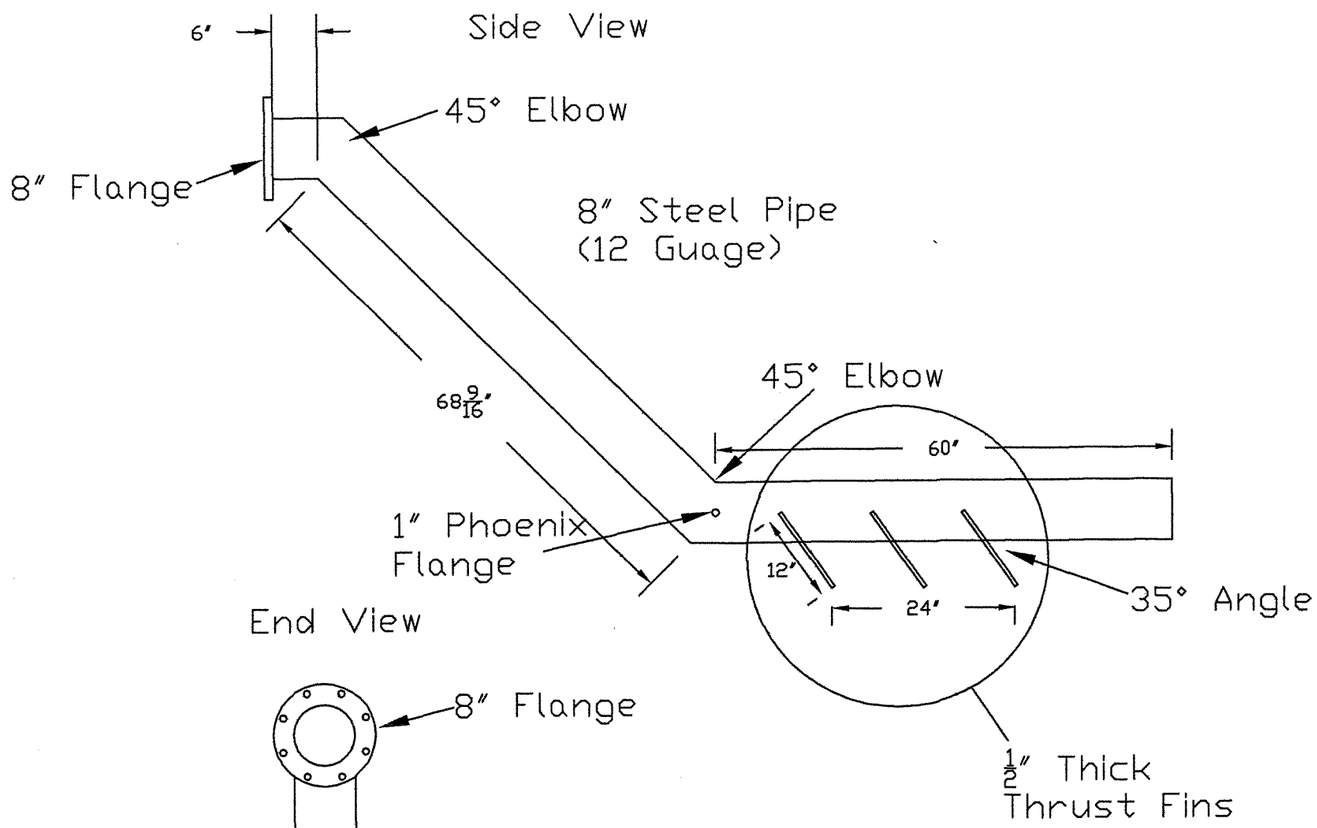

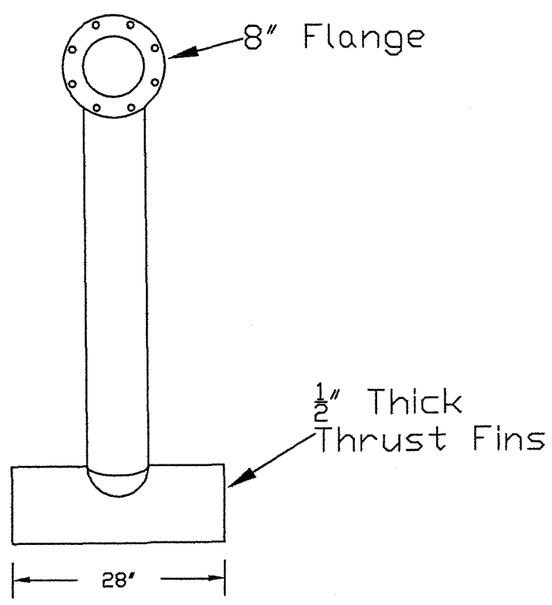

CONCENTRIC EXPANSION
PLAN VIEW
2 Needed

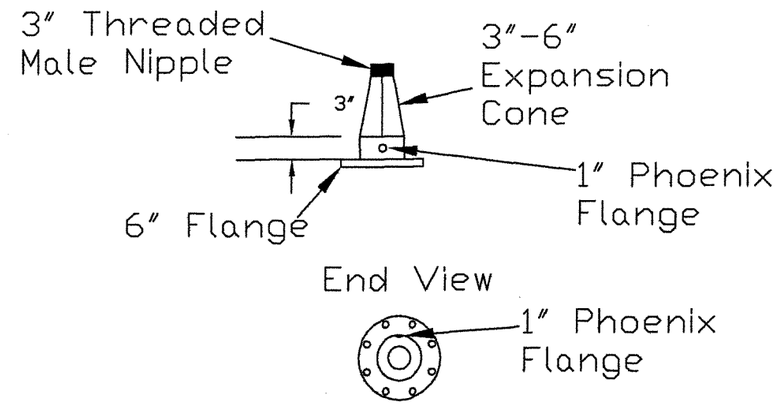

Pipe Support Detail
4 Needed

Front View

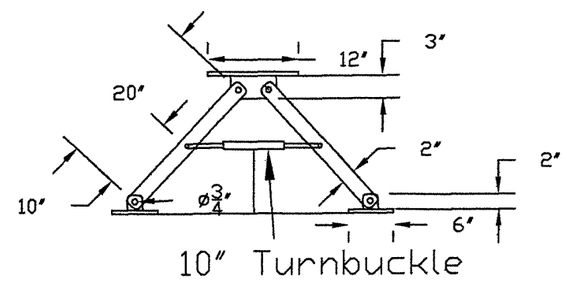

Note
Support will constructed out of 1/2" steel flat bar.

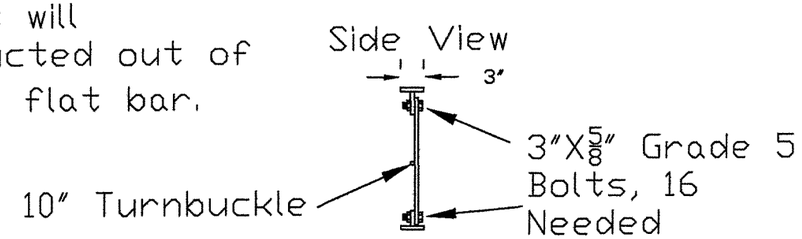

EXPIRES 6/30/2006

Plotted 11/22/05

As-Built 5/26/06

		DATE
DESIGNED	J. Kehrberg	9/05
PLOTTED	J. Kehrberg	9/05
CHECKED	G. Wilson	
APPROVED		

HARLAN PUMP STATION PROJECT
DISCHARGE Z-PIPE & THIMBLE DETAILS
GRANT COUNTY, OREGON

GRANT SOIL & WATER CONSERVATION DISTRICT

CADFILE
HarlanPump
Station

SHEET 9
OF 10

DISCHARGE MANIFOLD PLAN VIEW

1 Needed

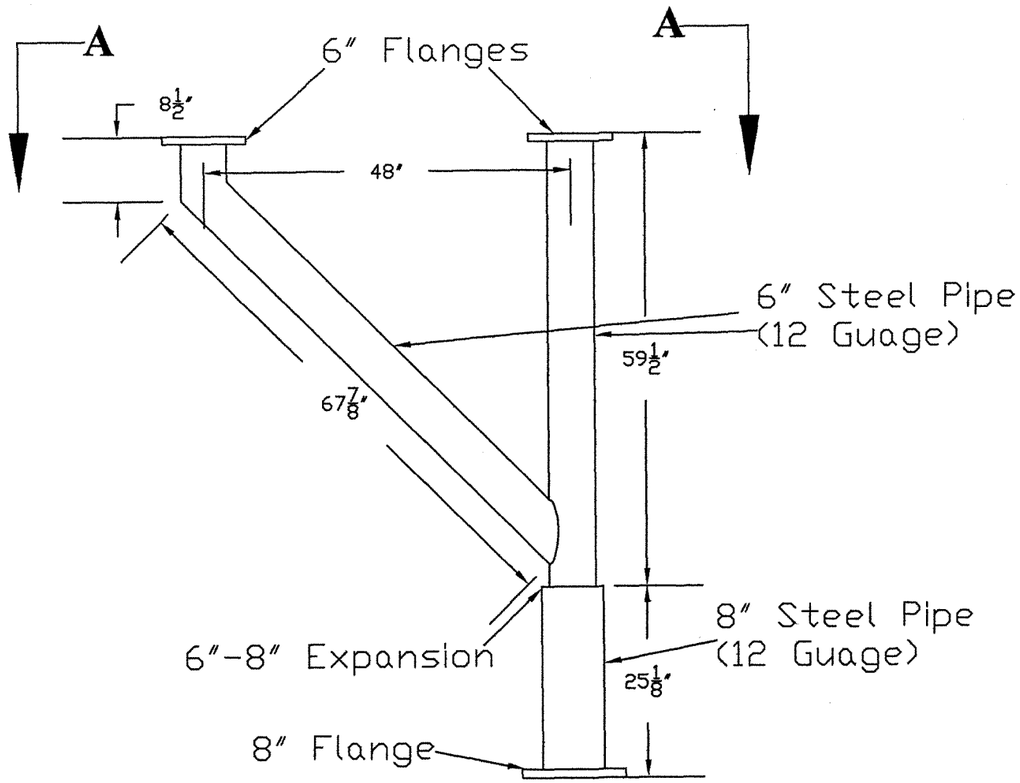

SECTION A-A

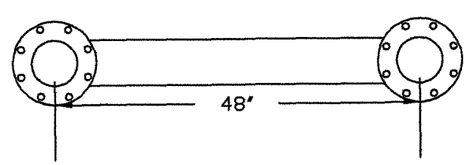

STEEL FLANGE SPECIFICATIONS

(Minimum Flange Thickness ½")

8" Flange
2 Needed

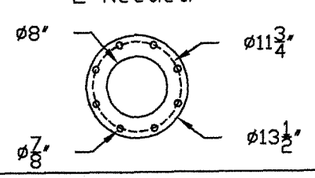

6" Flange
4 Needed

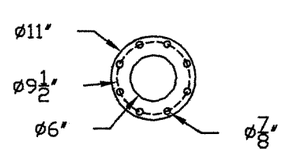

REGISTERED PROFESSIONAL ENGINEER 11,450 OREGON DECEMBER 3, 1981 GARY A. WILSON

EXPIRES 6/30/2006

Plotted 11/22/05

As-Built 5/26/06

		DATE
DESIGNED	J. Kehrberg	9/05
PLOTTED	J. Kehrberg	9/05
CHECKED	G. Wilson	
APPROVED		

HARLAN PUMP STATION PROJECT
DISCHARGE MANIFOLD, CONCENTRIC 90°, & STEEL FLANGE DETAILS
GRANT COUNTY, OREGON

GRANT SOIL & WATER CONSERVATION DISTRICT

CADFILE
GillespiePump Station

SHEET 10 OF 10

LOCATION MAP

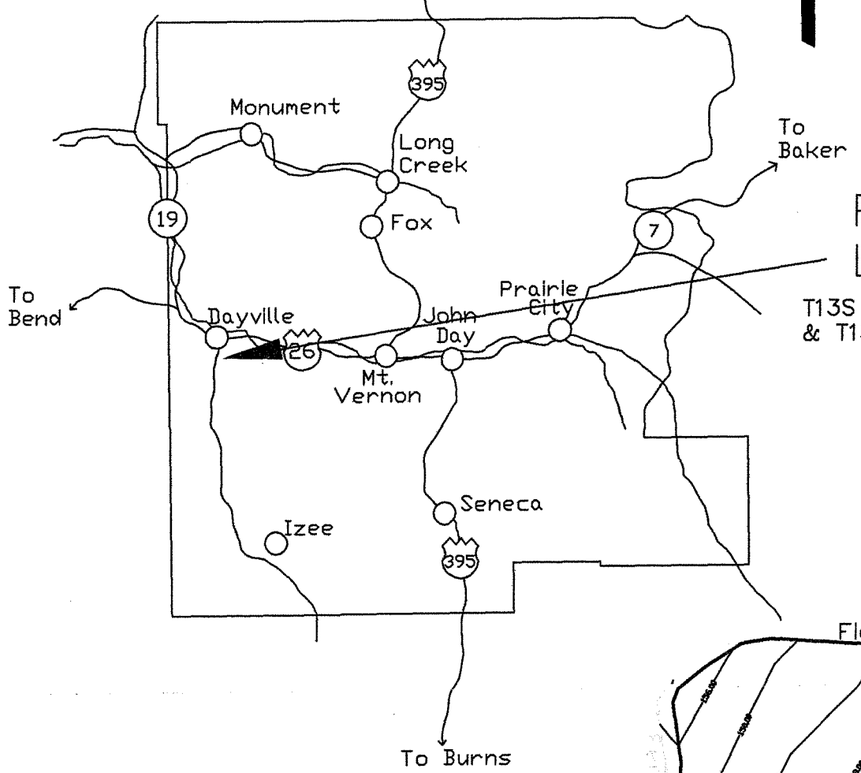

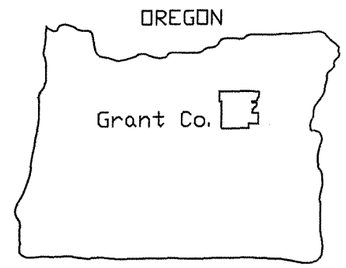

SITE PLAN

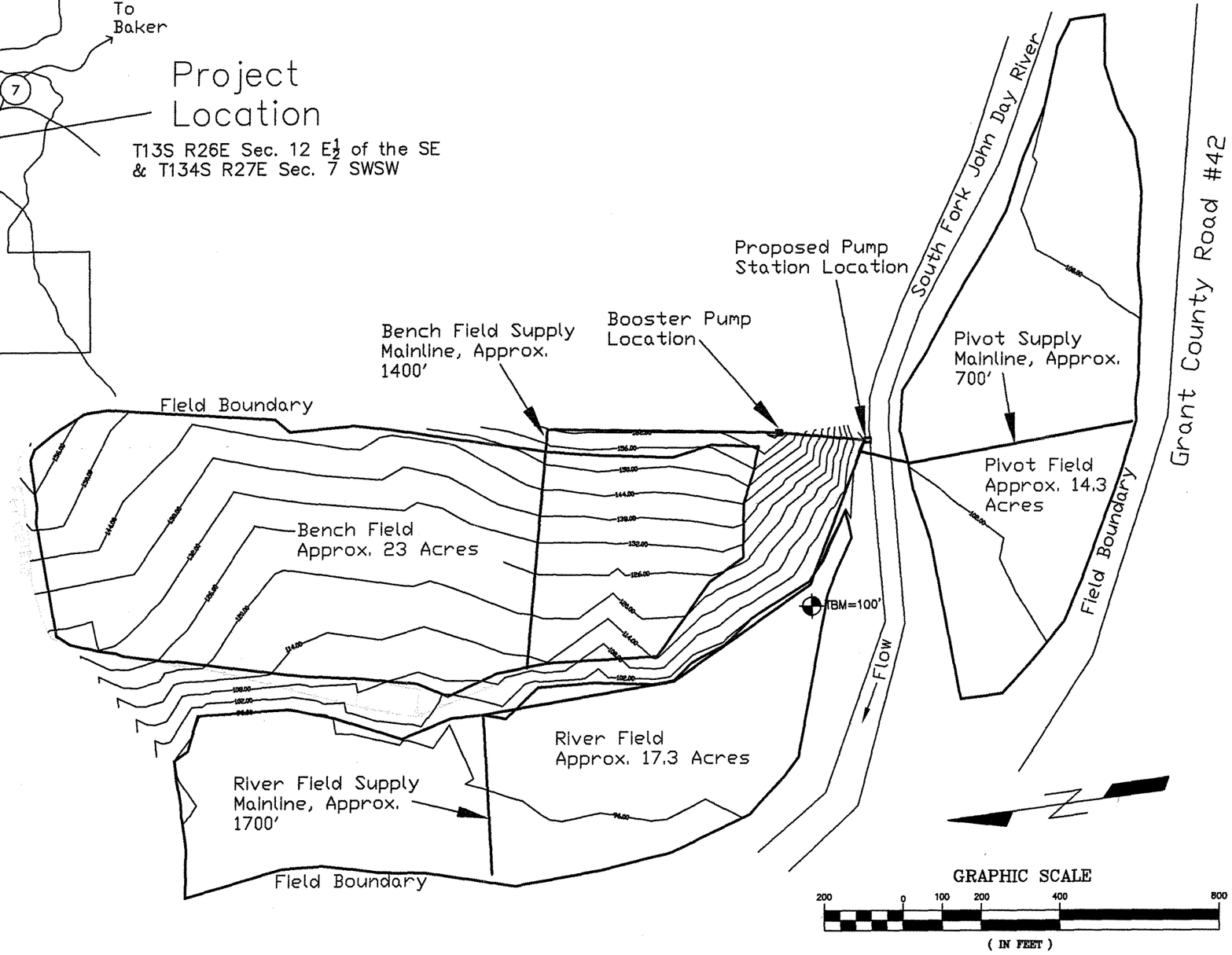

REGISTERED PROFESSIONAL ENGINEER 11,450 OREGON DECEMBER 3, 1981 GARY A. WILSON

EXPIRES 6/30/2006

As-Built 5/25/06 Plotted 11/22/05

		DATE
DESIGNED	J. Kehrberg	9/05
PLOTTED	J. Kehrberg	9/05
CHECKED	G. Wilson	
APPROVED		

GILLESPIE PUMP STATION PROJECT
LOCATION MAP & SITE PLAN
GRANT COUNTY, OREGON

GRANT SOIL & WATER CONSERVATION DISTRICT

CADFILE GillespiePump Station

SHEET 1 OF 12

IRRIGATION DELIVERY SYSTEM PLAN VIEW

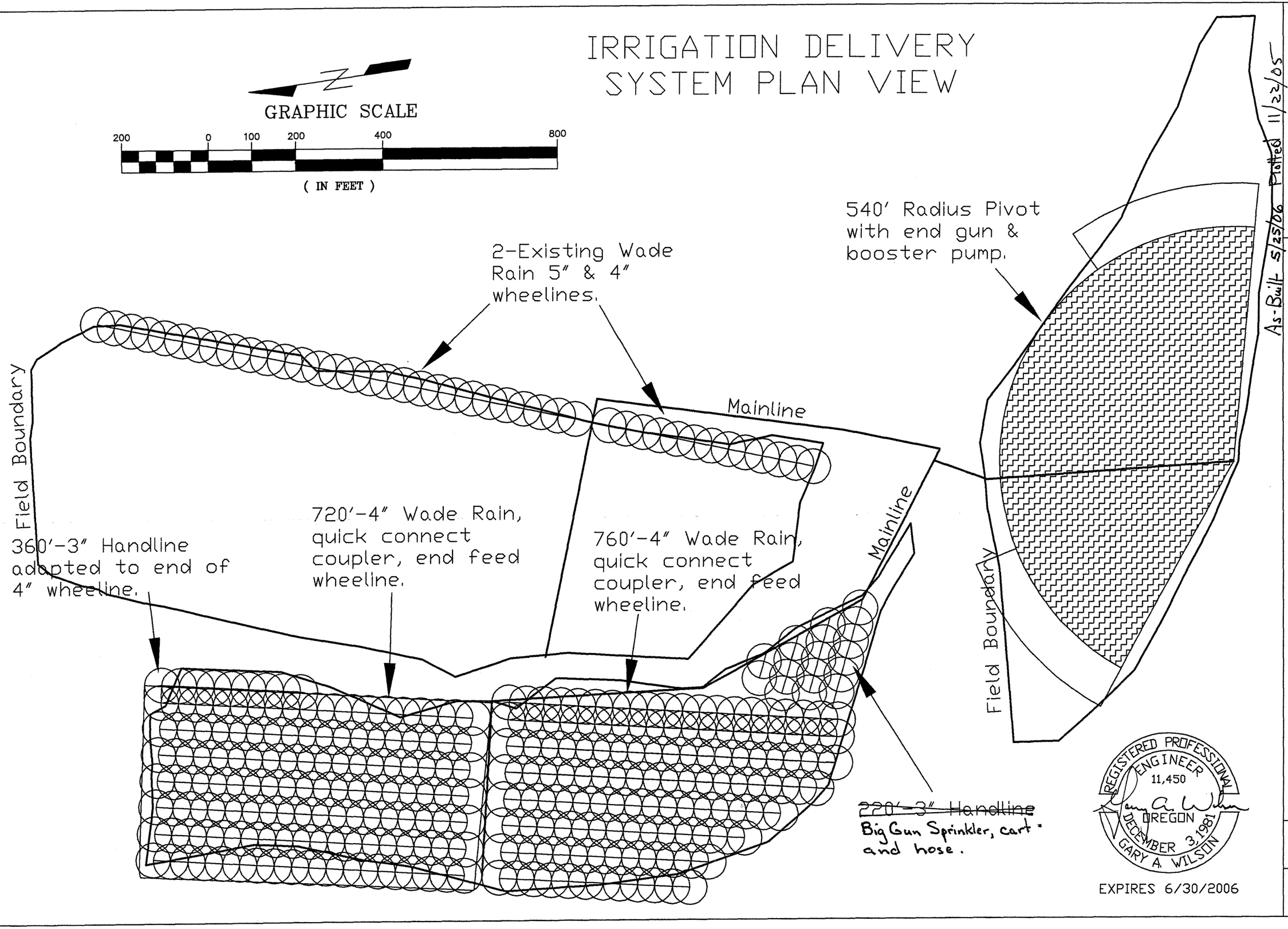

		DATE
DESIGNED	J. Kehrberg	9/05
PLOTTED	J. Kehrberg	9/05
CHECKED	G. Wilson	
APPROVED		

GILLESPIE PUMP STATION PROJECT
IRRGATION SYSTEM SITE PLAN
GRANT COUNTY, OREGON

GRANT SOIL & WATER CONSERVATION DISTRICT

CADFILE GillespiePump Station

SHEET 2 OF 12

RIVER FIELD MAINLINE ALIGNMENT
STATION 0+00-8+50

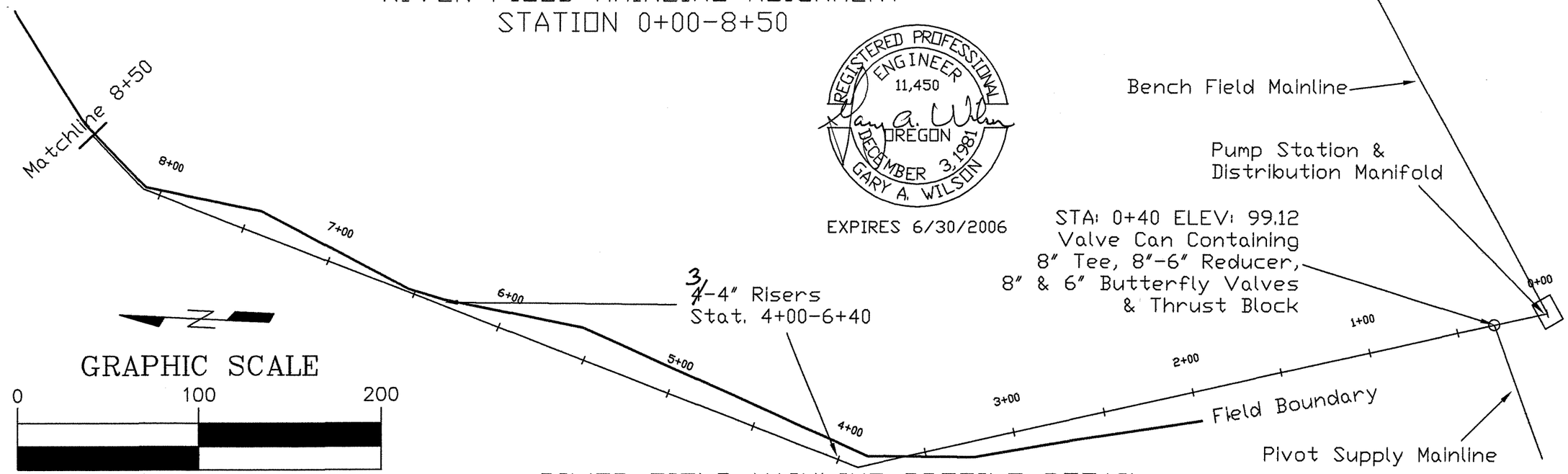

REGISTERED PROFESSIONAL ENGINEER 11,450 OREGON DECEMBER 3, 1981 GARY A. WILSON

EXPIRES 6/30/2006

GRAPHIC SCALE

0 100 200

(IN FEET)

RIVER FIELD MAINLINE PROFILE DETAIL
STATION 0+00-8+50

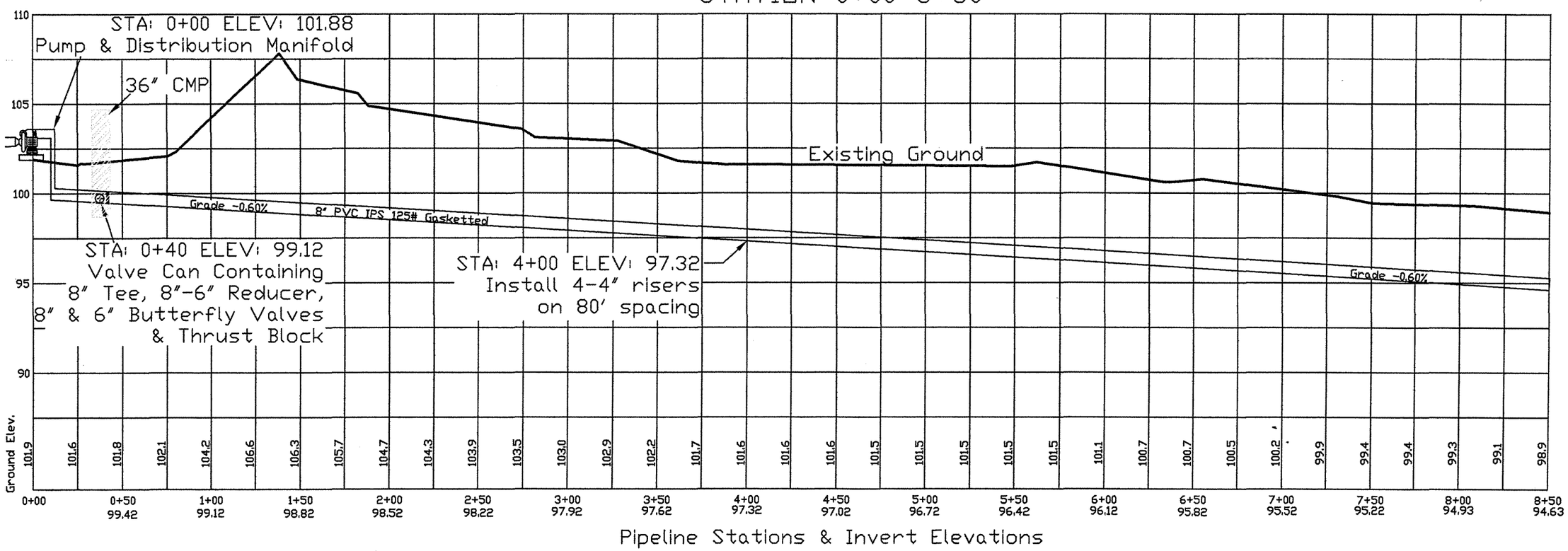

As-Built 5/25/06 Plotted 11/22/05

		DATE
DESIGNED	J. Kehrberg	9/05
PLOTTED	J. Kehrberg	9/05
CHECKED	G. Wilson	
APPROVED		

GILLESPIE PUMP STATION PROJECT
RIVER FIELD MAINLINE PROFILE DETAILS
GRANT COUNTY, OREGON

GRANT SOIL & WATER CONSERVATION DISTRICT

CADFILE
GillespiePump Station

SHEET 3 OF 12

RIVER FIELD MAINLINE ALIGNMENT
STATION 8+50-17+00

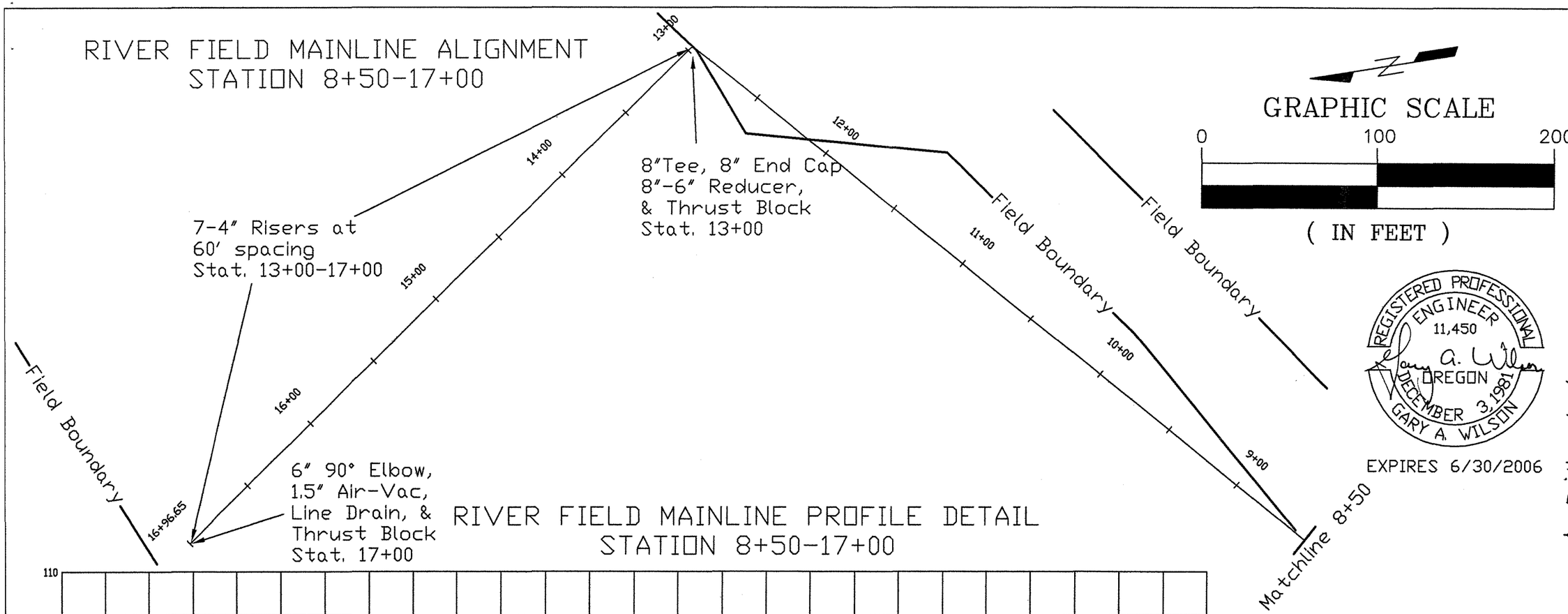

GRAPHIC SCALE

0 100 200

(IN FEET)

REGISTERED PROFESSIONAL ENGINEER 11,450 OREGON DECEMBER 3, 1981 GARY A. WILSON

EXPIRES 6/30/2006

RIVER FIELD MAINLINE PROFILE DETAIL
STATION 8+50-17+00

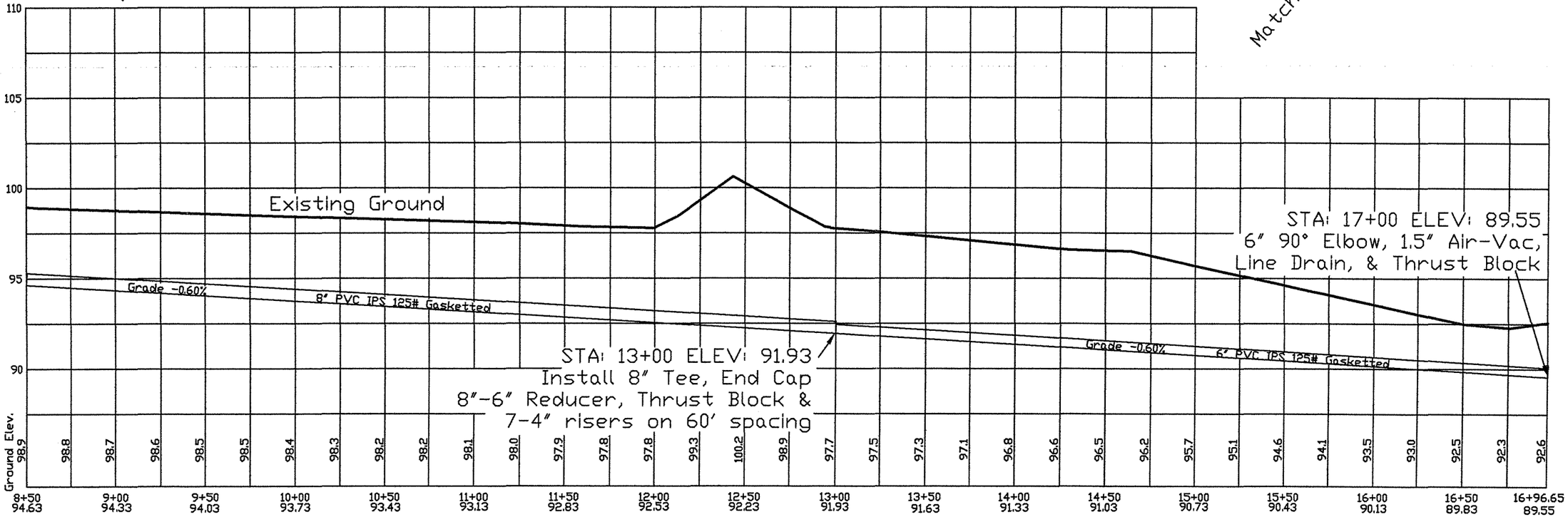

		DATE
DESIGNED	J. Kehrberg	9/05
PLOTTED	J. Kehrberg	9/05
CHECKED	G. Wilson	
APPROVED		

Plotted 11/22/05

As-Built 5/25/06

GILLESPIE PUMP STATION PROJECT
RIVER FIELD MAINLINE PROFILE DETAILS
GRANT COUNTY, OREGON

GRANT SOIL & WATER CONSERVATION DISTRICT

CADFILE
GillespiePump Station

SHEET 4 OF 12

PIVOT SUPPLY MAINLINE ALIGNMENT
STATION 0+00-7+00

GRAPHIC SCALE

0 100 200

(IN FEET)

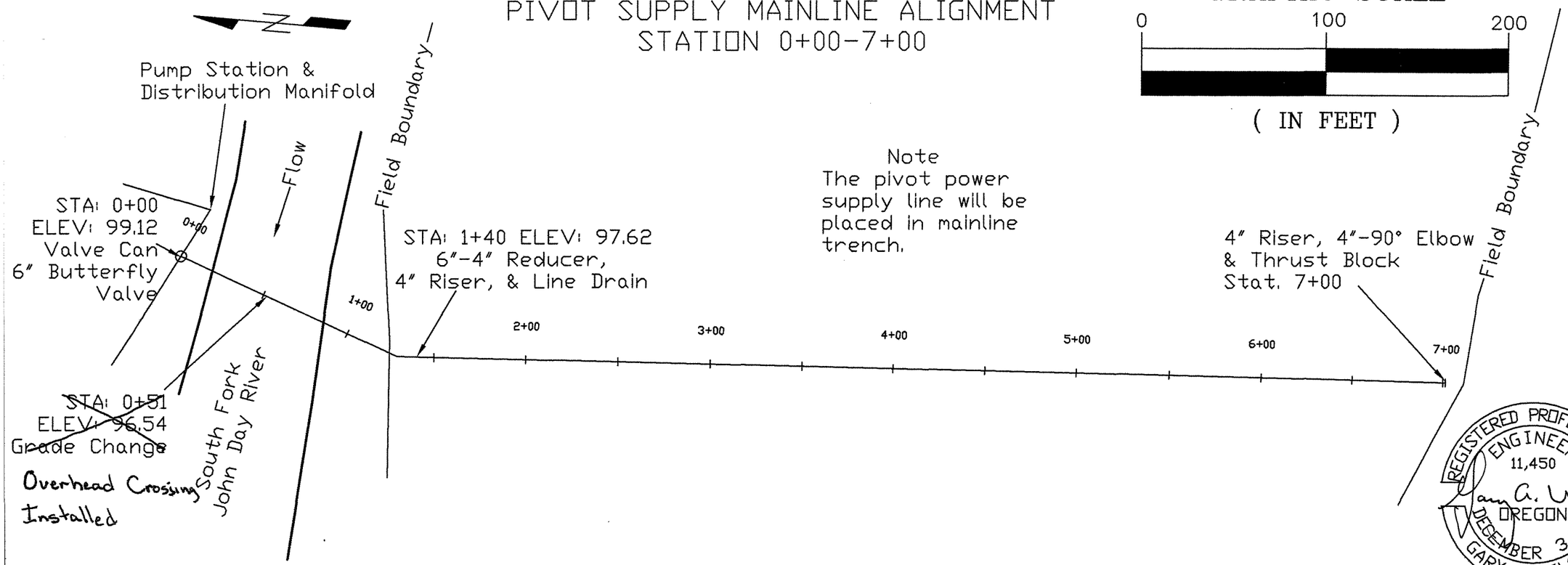

Note
The pivot power supply line will be placed in mainline trench.

REGISTERED PROFESSIONAL ENGINEER 11,450 OREGON DECEMBER 3, 1981 GARY A. WILSON

EXPIRES 6/30/2006

PIVOT SUPPLY MAINLINE PROFILE DETAIL
STATION 0+00-7+00

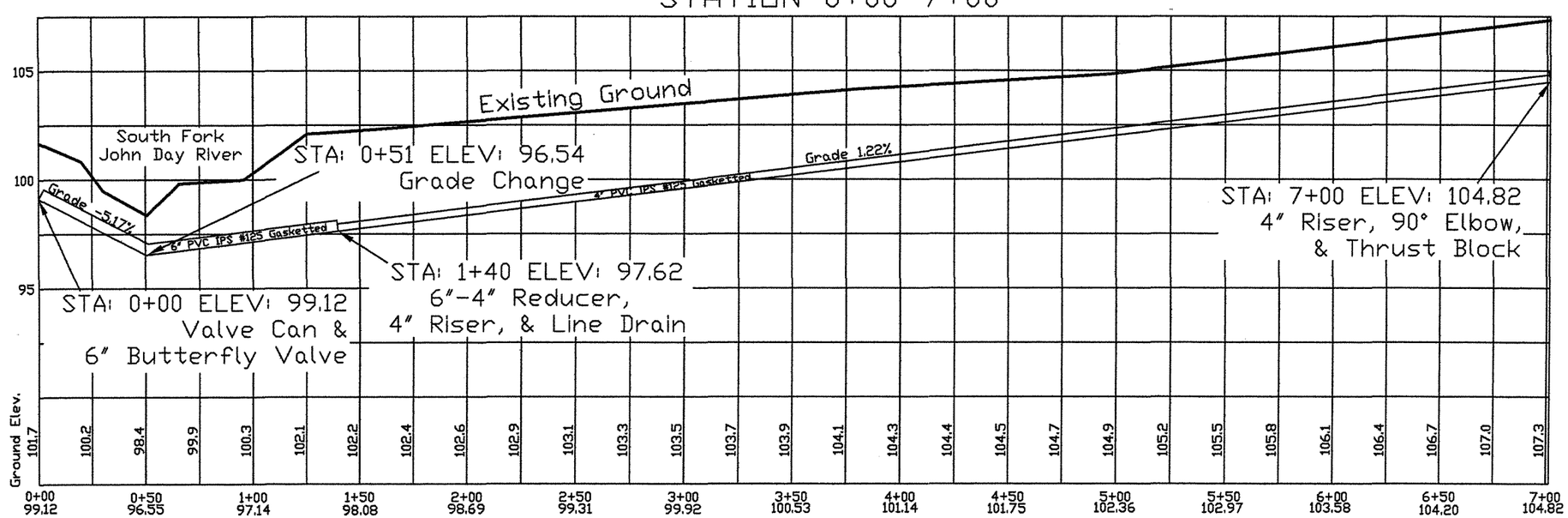

As-Built 5/25/06 Plotted 11/22/05

		DATE
DESIGNED	J. Kehrberg	9/05
PLOTTED	J. Kehrberg	9/05
CHECKED	G. Wilson	
APPROVED		

GILLESPIE PUMP STATION PROJECT
PIVOT SUPPLY MAINLINE PROFILE DETAILS
GRANT COUNTY, OREGON

GRANT SOIL & WATER CONSERVATION DISTRICT

CADFILE
GillespiePump
Station

SHEET 5
OF 12

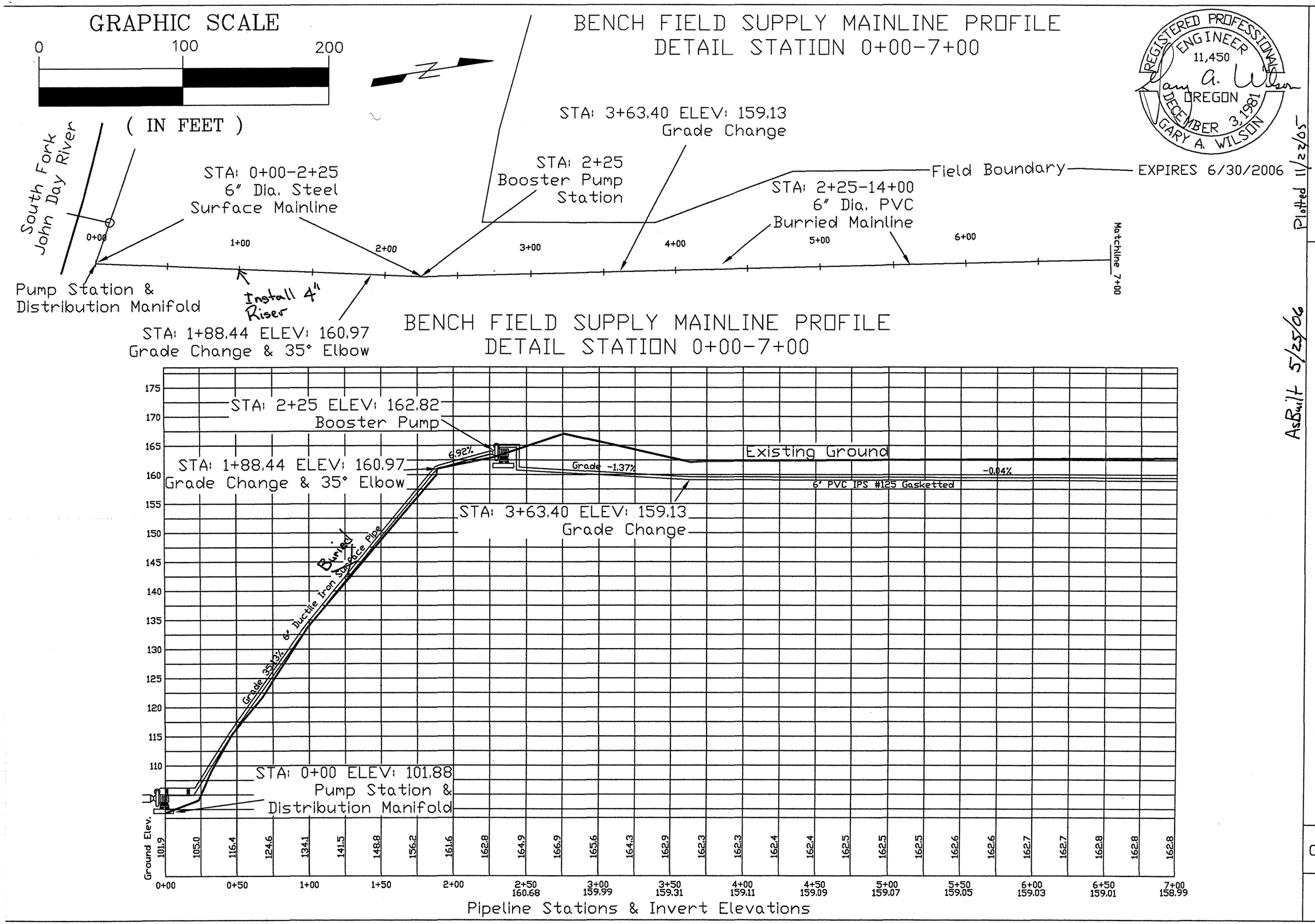

REGISTERED PROFESSIONAL ENGINEER
11,450
Gary A. Wilson
OREGON
DECEMBER 3, 1981
GARY A. WILSON

EXPIRES 6/30/2006

Plotted 11/22/05

AsBuilt 5/25/06

		DATE
DESIGNED	J. Kehrberg	9/05
PLOTTED	J. Kehrberg	9/05
CHECKED	G. Wilson	
APPROVED		

GILLESPIE PUMP STATION PROJECT
BENCH FIELD MAINLINE PROFILE DETAILS
GRANT COUNTY, OREGON

GRANT SOIL & WATER CONSERVATION DISTRICT

CADFILE
GillespiePump
Station

SHEET 6
OF 12

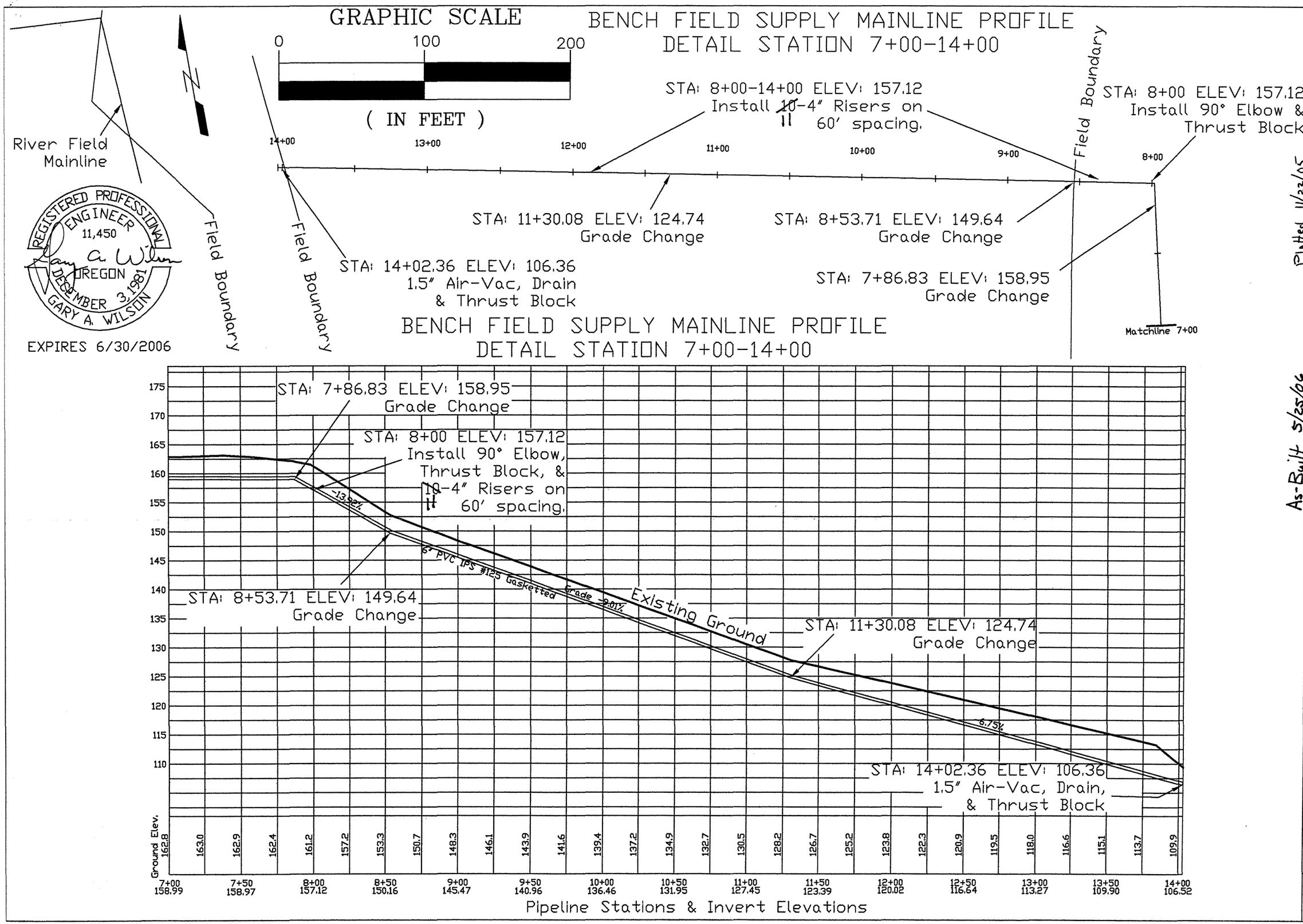
GRAPHIC SCALE
0
100
200
(IN FEET)
BENCH FIELD SUPPLY MAINLINE PROFILE
DETAIL STATION 7+00-14+00
River Field Mainline
Field Boundary
Field Boundary
Field Boundary
STA: 8+00-14+00 ELEV: 157.12
Install 11-4" Risers on
60' spacing.
STA: 8+00 ELEV: 157.12
Install 90° Elbow &
Thrust Block
14+00
13+00
12+00
11+00
10+00
9+00
8+00
STA: 11+30.08 ELEV: 124.74
Grade Change
STA: 8+53.71 ELEV: 149.64
Grade Change
STA: 14+02.36 ELEV: 106.36
1.5" Air-Vac, Drain
& Thrust Block
STA: 7+86.83 ELEV: 158.95
Grade Change
Matchline 7+00
BENCH FIELD SUPPLY MAINLINE PROFILE
DETAIL STATION 7+00-14+00
STA: 7+86.83 ELEV: 158.95
Grade Change
STA: 8+00 ELEV: 157.12
Install 90° Elbow,
Thrust Block, &
11-4" Risers on
60' spacing.
-13.92%
6" PVC IPS #125 Gasketted
Grade -9.01%
Existing Ground
STA: 8+53.71 ELEV: 149.64
Grade Change
STA: 11+30.08 ELEV: 124.74
Grade Change
-6.75%
STA: 14+02.36 ELEV: 106.36
1.5" Air-Vac, Drain,
& Thrust Block
175
170
165
160
155
150
145
140
135
130
125
120
115
110
Ground Elev.
162.8
163.0
162.9
162.4
161.2
157.2
153.3
150.7
148.3
146.1
143.9
141.6
139.4
137.2
134.9
132.7
130.5
128.2
126.7
125.2
123.8
122.3
120.9
119.5
118.0
116.6
115.1
113.7
109.9
7+00 158.99
7+50 158.97
8+00 157.12
8+50 150.16
9+00 145.47
9+50 140.96
10+00 136.46
10+50 131.95
11+00 127.45
11+50 123.39
12+00 120.02
12+50 116.64
13+00 113.27
13+50 109.90
14+00 106.52
Pipeline Stations & Invert Elevations
REGISTERED PROFESSIONAL ENGINEER
11,450
OREGON
DECEMBER 3, 1981
GARY A. WILSON
EXPIRES 6/30/2006
Plotted 11/22/05
As-Built 5/25/06
DATE
DESIGNED J. Kehrberg 9/05
PLOTTED J. Kehrberg 9/05
CHECKED G. Wilson
APPROVED
GILLESPIE PUMP STATION PROJECT
BENCH FIELD MAINLINE PROFILE DETAILS
GRANT COUNTY, OREGON
GRANT SOIL & WATER CONSERVATION DISTRICT
CADFILE
GillespiePump
Station
SHEET 7
OF 12

THRUST BLOCK DETAILS
NOT TO SCALE

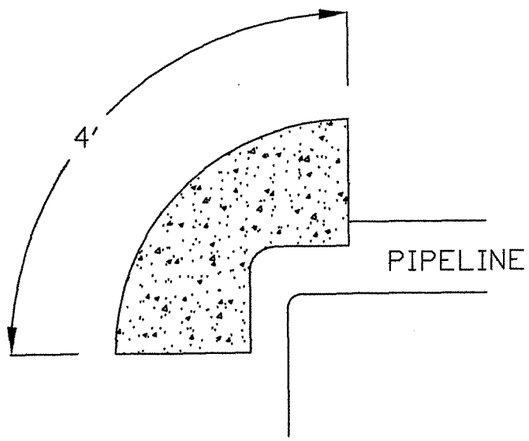

TYPICAL TEE PLAN VIEW

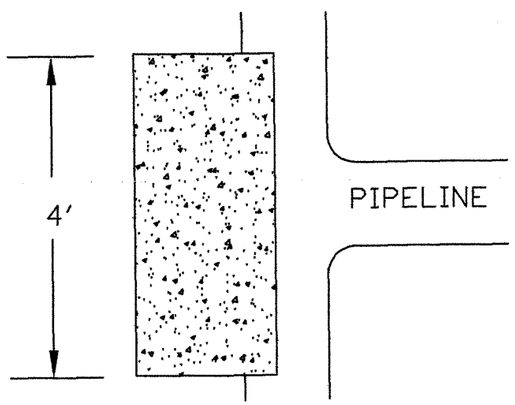

ELEVATION VIEW BOTH TYPES

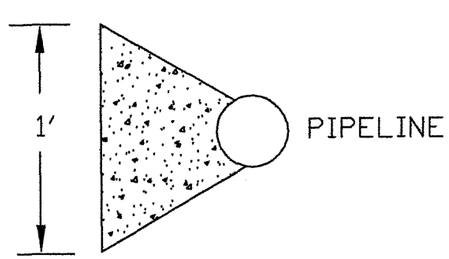

TYPICAL DRAIN DETAIL ELEVATION VIEW
NOT TO SCALE

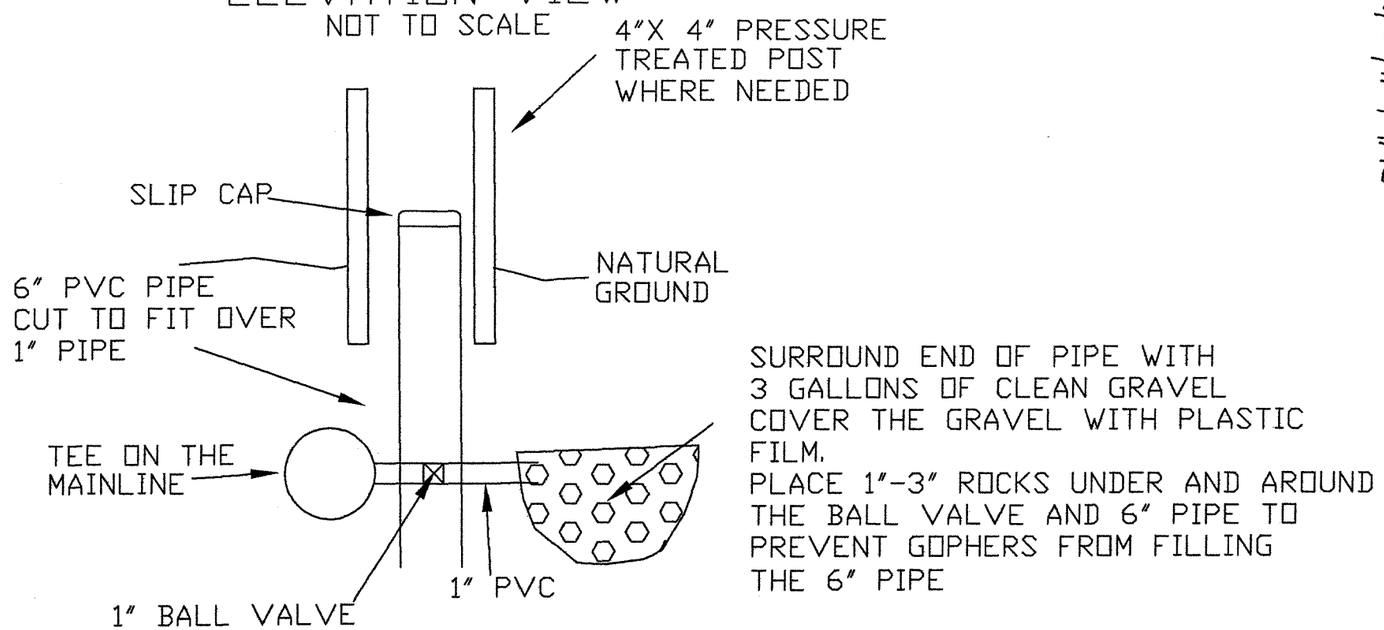

END OF PIPELINES DETAIL

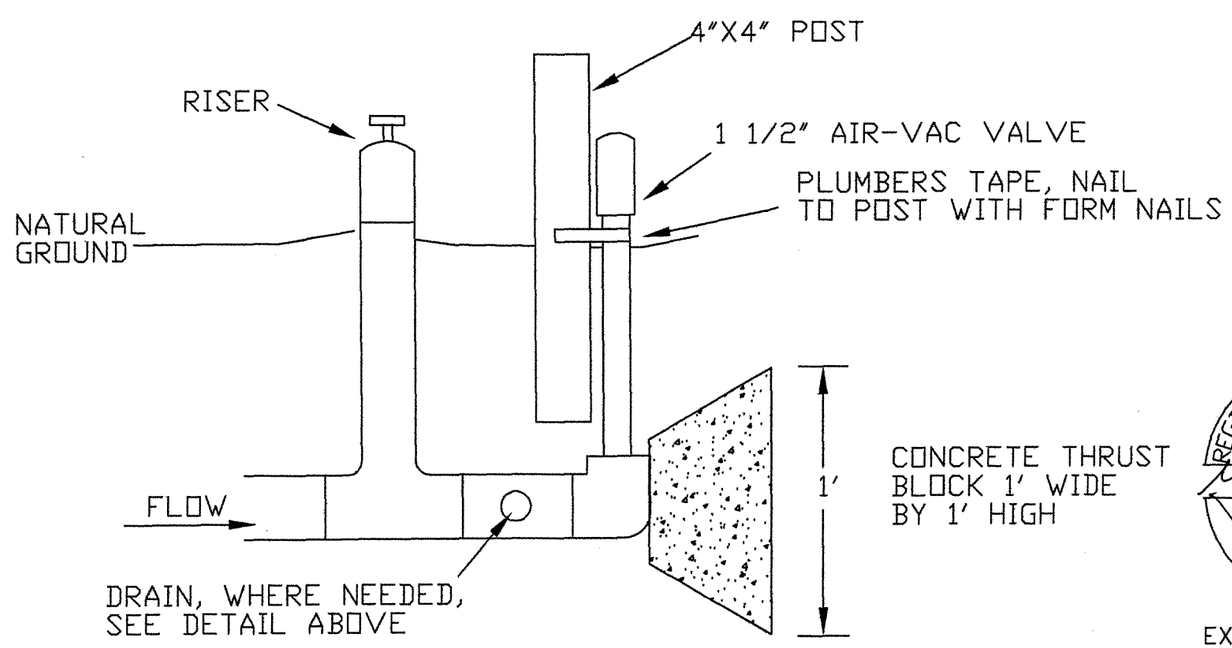

REGISTERED PROFESSIONAL ENGINEER 11,450 OREGON DECEMBER 3, 1981 GARY A. WILSON

EXPIRES 6/30/2006

Plotted 11/22/05

		DATE
DESIGNED	J. Kehrberg	9/05
PLOTTED	J. Kehrberg	9/05
CHECKED	G. Wilson	
APPROVED		

GILLESPIE PUMP STATION PROJECT
THRUST BLOCK & DRAIN DETAILS
GRANT COUNTY, OREGON

GRANT SOIL & WATER CONSERVATION DISTRICT

CADFILE GillespiePump Station

SHEET 8 OF 12

VALVE CAN ELEVATION VIEW
NOT TO SCALE

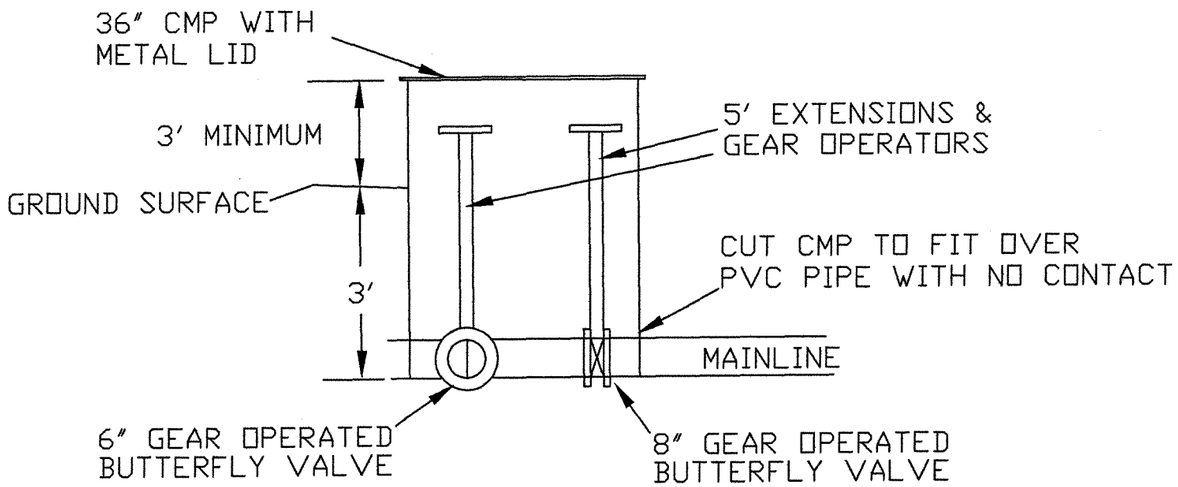

MAINLINE TRENCH DETAIL
NOT TO SCALE

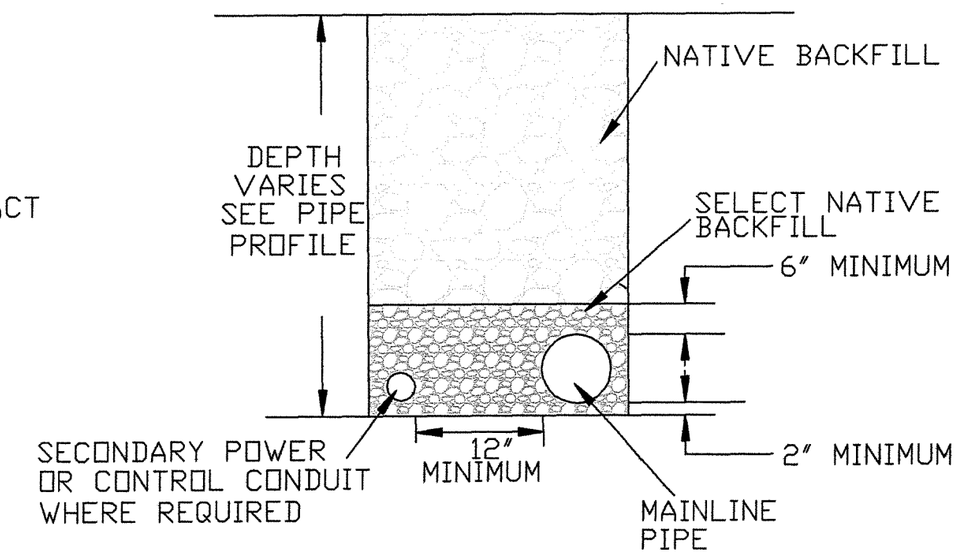

INLINE VALVE ASSEMBLY
RIVER FIELD MAINLINE STA: 0+40
PLAN VIEW

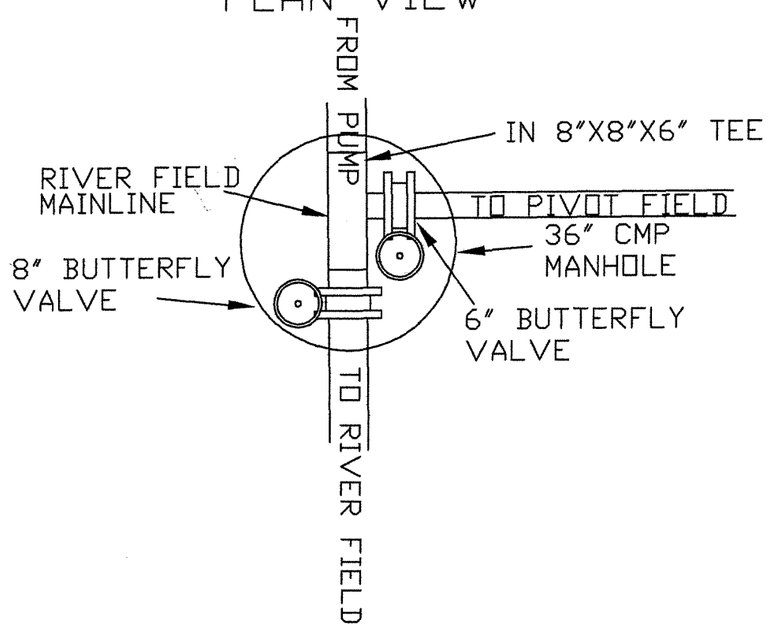

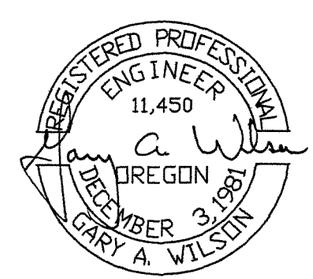

EXPIRES 6/30/2006

Plotted 11/22/05

		DATE
DESIGNED	J. Kehrberg	9/05
PLOTTED	J. Kehrberg	9/05
CHECKED	G. Wilson	
APPROVED		

GILLESPIE PUMP STATION PROJECT
VALVE CAN DETAIL
GRANT COUNTY, OREGON

GRANT SOIL & WATER CONSERVATION DISTRICT

CADFILE
GillespiePump Station

SHEET 9 OF 12

PUMP STATION SITE PLAN

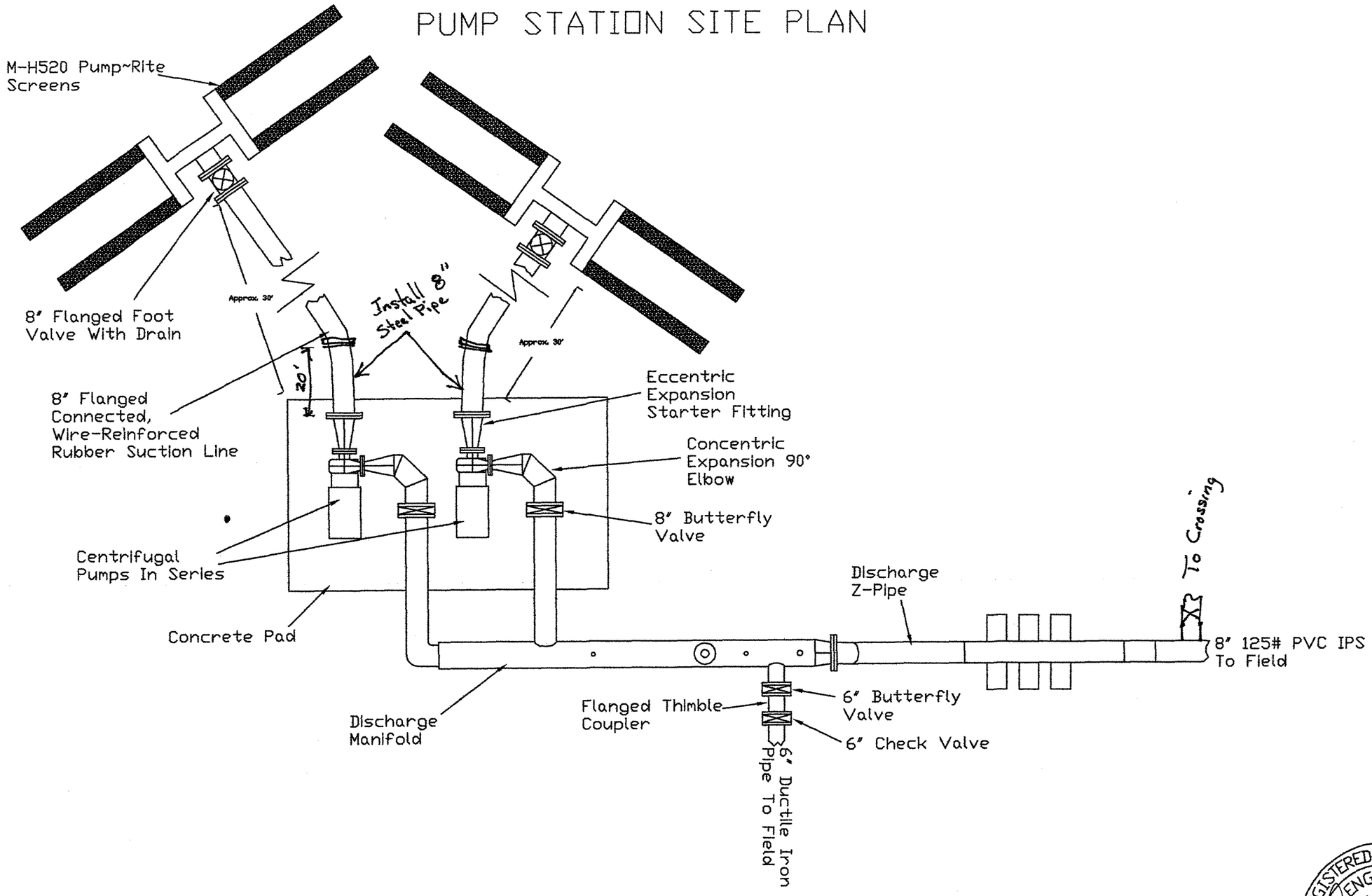

REGISTERED PROFESSIONAL ENGINEER 11,450 OREGON DECEMBER 3, 1981 GARY A. WILSON

EXPIRES 6/30/2006

Plotted 11/22/05

As-Built 5/25/06

		DATE
DESIGNED	J. Kehrberg	9/05
PLOTTED	J. Kehrberg	9/05
CHECKED	G. Wilson	
APPROVED		

GILLESPIE PUMP STATION PROJECT
PUMP STATION PLAN VIEW DETAIL
GRANT COUNTY, OREGON

GRANT SOIL & WATER CONSERVATION DISTRICT

CADFILE GillespiePump Station

SHEET 10 OF 12

DISCHARGE MANIFOLD PLAN VIEW

1 Needed

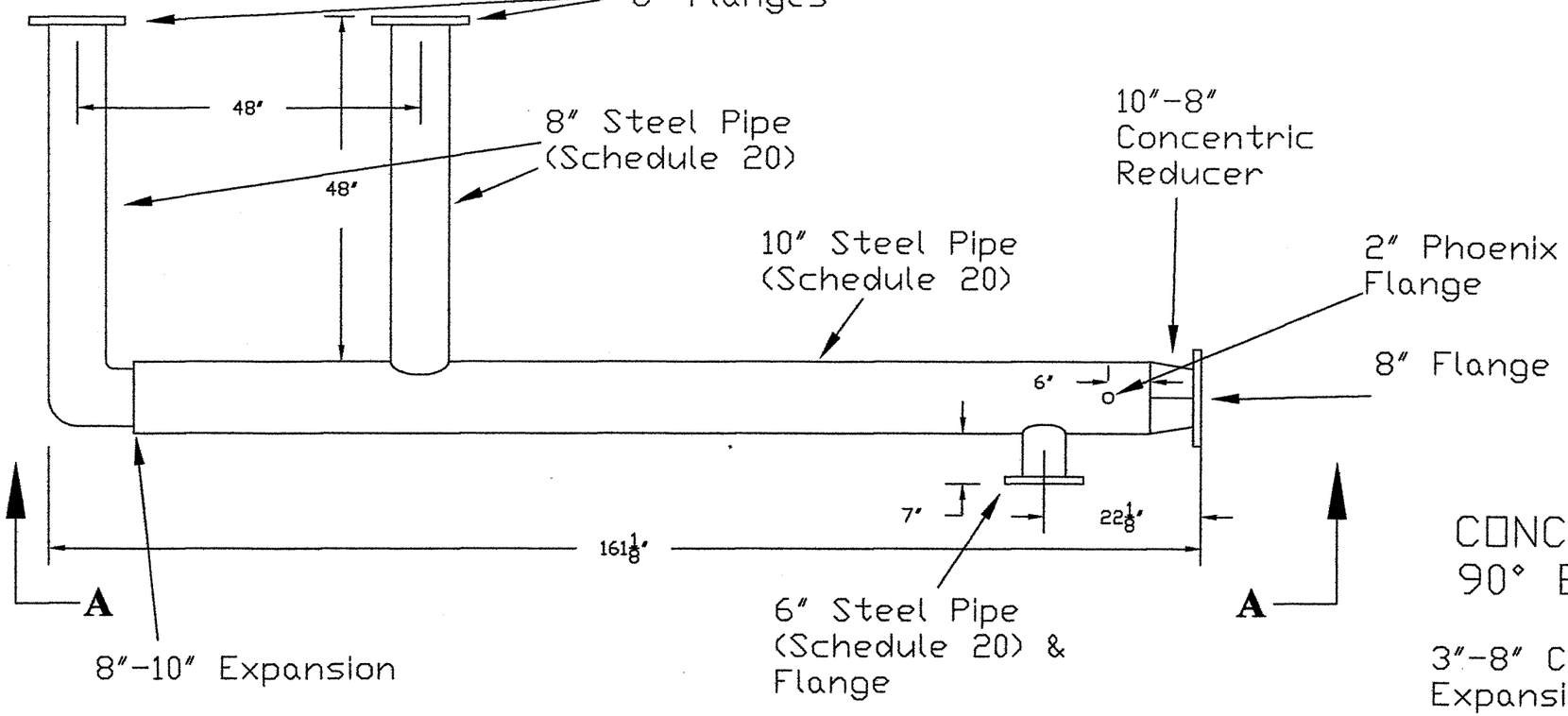

SECTION A-A

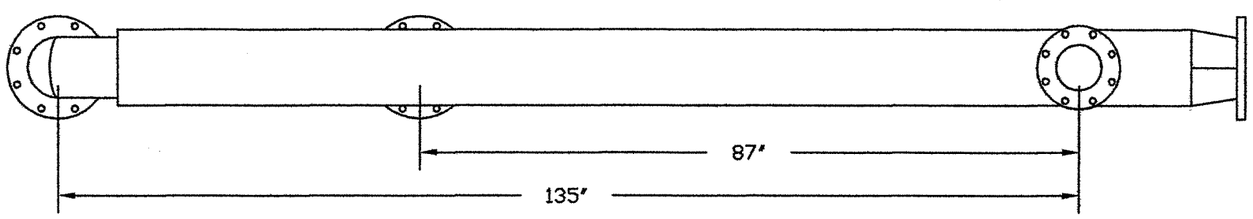

STEEL FLANGE SPECIFICATIONS

(Minimum Flange Thickness ½")

8" Flange

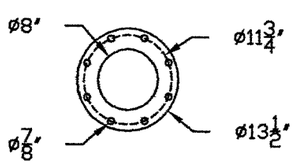

6" Flange

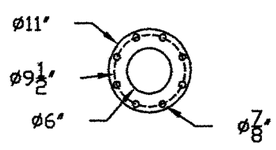

3" Flange

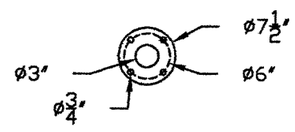

CONCENTRIC EXPANSION 90° ELBOW PLAN VIEW

2 Needed

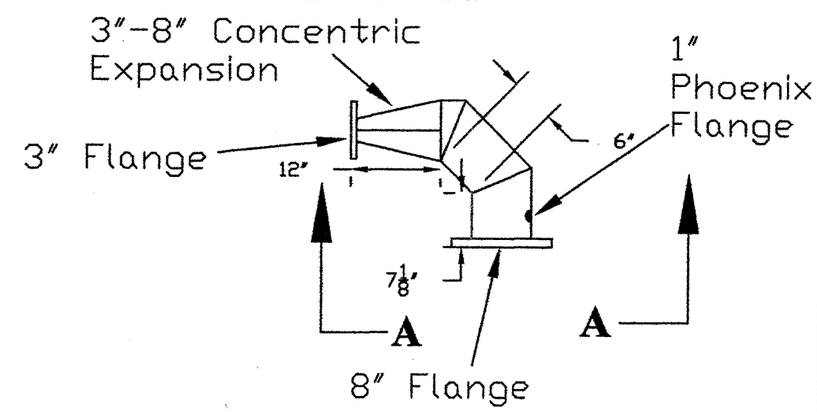

SECTION A-A

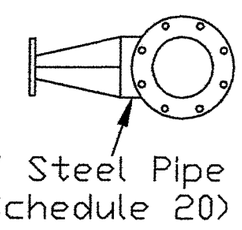

REGISTERED PROFESSIONAL ENGINEER 11,450 OREGON DECEMBER 3, 1981 GARY A. WILSON

EXPIRES 6/30/2006

As-Built 5/25/06

Plotted 11/22/05

		DATE
DESIGNED	J. Kehrberg	9/05
PLOTTED	J. Kehrberg	9/05
CHECKED	G. Wilson	
APPROVED		

GILLESPIE PUMP STATION PROJECT
DISCHARGE MANIFOLD, CONCENTRIC 90°, & STEEL FLANGE DETAILS
GRANT COUNTY, OREGON

GRANT SOIL & WATER CONSERVATION DISTRICT

CADFILE GillespiePump Station

SHEET 11 OF 12

DISCHARGE Z-PIPE
1 Needed

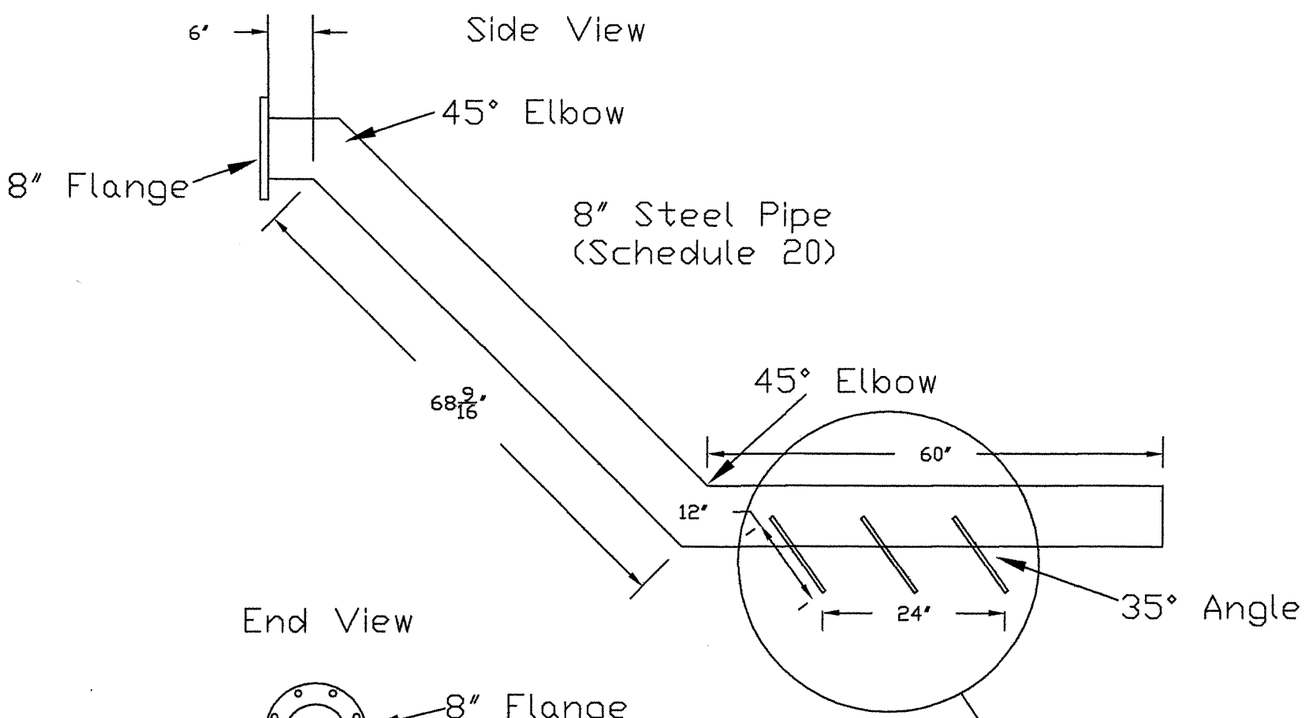

End View

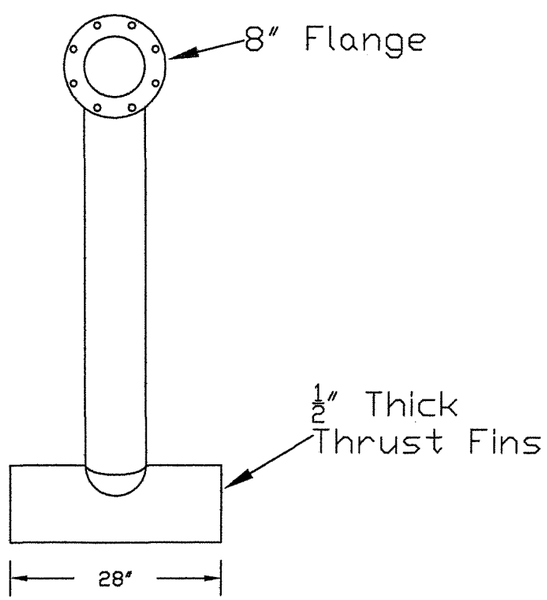

6" FLANGED THIMBLE FITTING
1 Needed

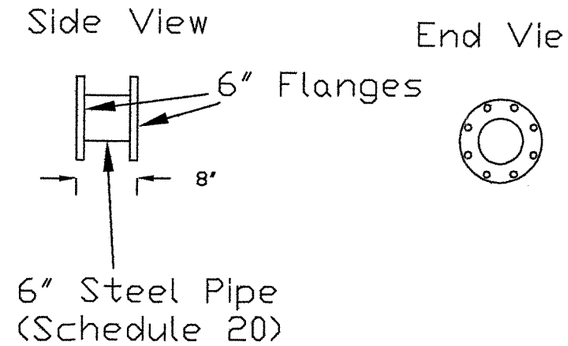

Pipe Support Detail
4 Needed

Front View

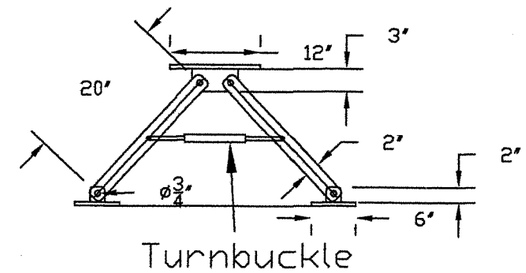

REGISTERED PROFESSIONAL ENGINEER 11,450 OREGON DECEMBER 3, 1981 GARY A. WILSON

EXPIRES 6/30/2006

As-Built 5/25/06

Plotted 11/22/05

		DATE
DESIGNED	J. Kehrberg	9/05
PLOTTED	J. Kehrberg	9/05
CHECKED	G. Wilson	
APPROVED		

GILLESPIE PUMP STATION PROJECT
DISCHARGE Z-PIPE & THIMBLE DETAILS
GRANT COUNTY, OREGON

GRANT SOIL & WATER CONSERVATION DISTRICT

CADFILE
GillespiePump
Station

SHEET 12
OF 12