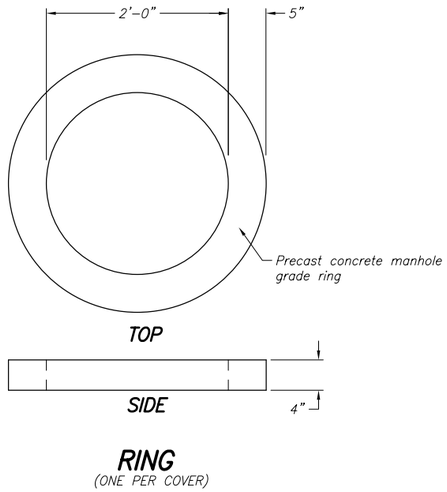

RING
(ONE PER COVER)

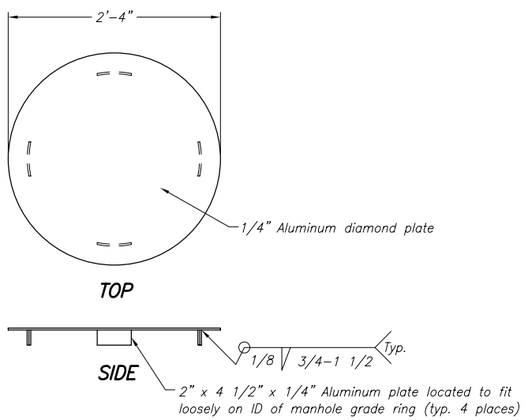

LID
(ONE PER COVER)

AIR/GAS VENT COVER

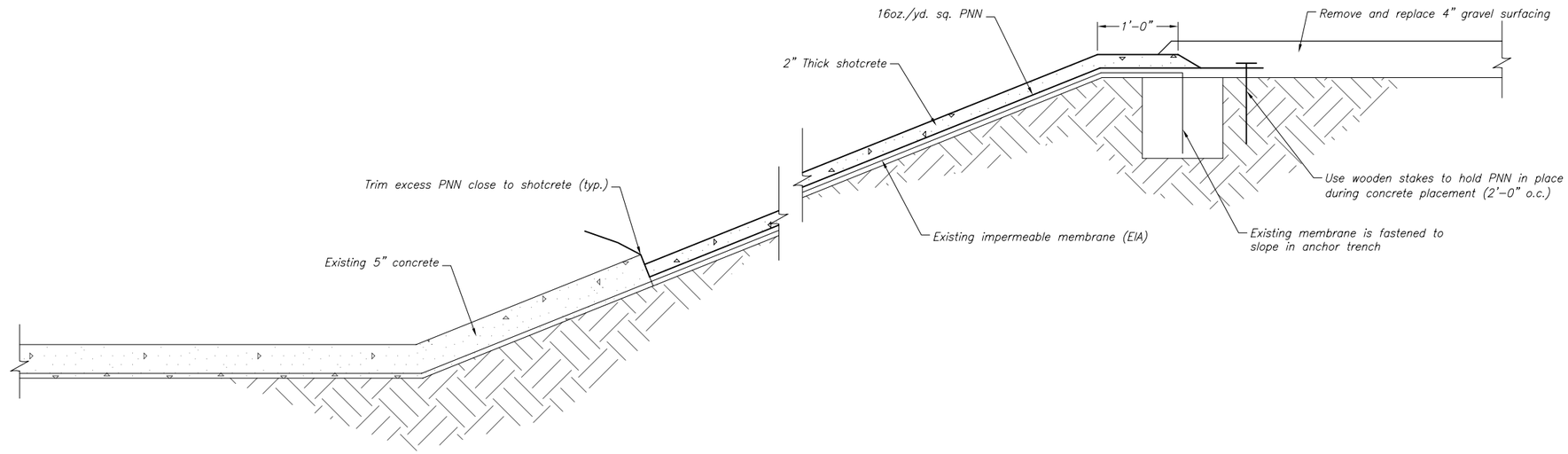

EIA = Ethylene interpolymer alloy
PNN = Polyester Needle punched Non-woven

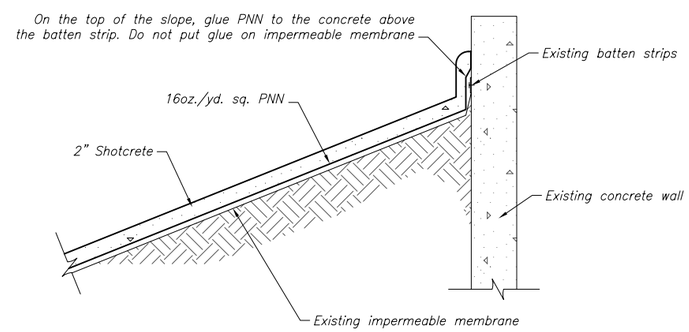

10 0 10 20 30
SCALE OF FEET

REV. NO		
1	2006-07-05 100-	Revised gravel surfacing note

ALWAYS THINK SAFETY

U.S. DEPARTMENT OF THE INTERIOR
BUREAU OF RECLAMATION

WEST EXTENSION IRRIGATION DISTRICT WATER EXCHANGE FACILITIES - OREGON

REGULATING RESERVOIR

SHOTCRETE LINER

TYPICAL SECTIONS

DESIGNED Charlie Spindler P.E. CHECKED Dennis Hawkins P.E.
DRAWN L. Boekweg TECH. APPR. Charlie Spindler P.E.
NAME - TITLE
APPROVED Dave Jennings
PROGRAM MANAGER

BOISE, IDAHO SHEET 1 OF 1 2006-05-10 30-100-8147

DATE AND TIME PLOTTED JULY 5, 2006 10:50
PLOTTED BY LBOEKWEG

CAD SYSTEM AutoCAD Rel. 16.2s
CAD FILENAME 30-100-8147.DWG

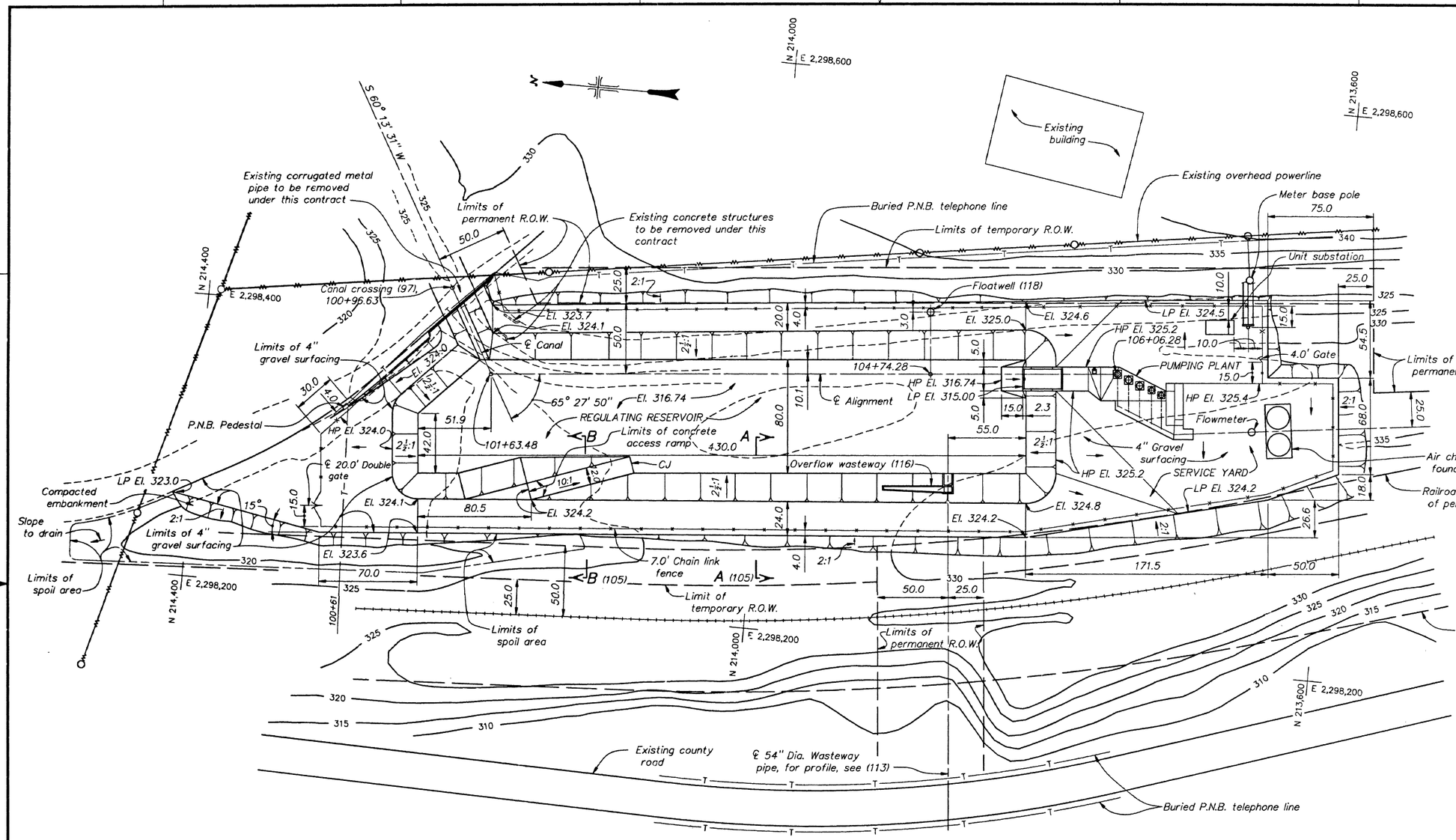

SITE PLAN

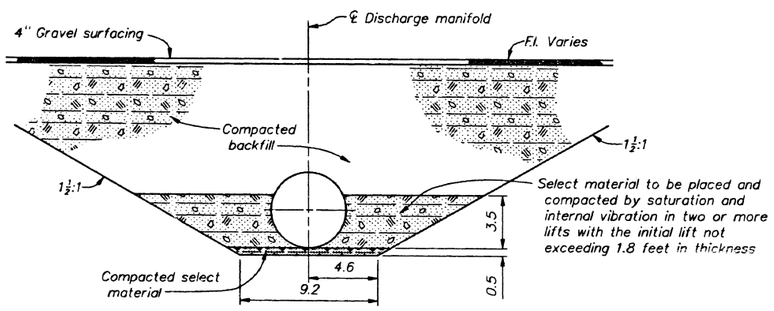

TYPICAL STEEL DISCHARGE MANIFOLD TRENCH SECTION

(NO SCALE)

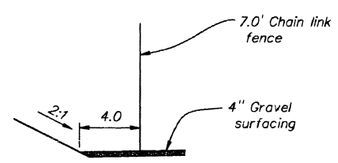

TYPICAL SECTION AT FENCE

(NO SCALE)

SCALE OF FEET

REFERENCE DRAWING

UNIT SUBSTATION – PLANS AND SECTIONS _ _ _ _ _ _ _ _ 1022-D-42

NOTES

Topography was prepared by the Denver Office using survey information provided by the Yakima Project Office.
For general notes, see (21).
Contours shown thus ~ ~ are existing contours which will be changed by construction grading.
Slope yard uniformly between given elevations.
Yard elevations are to the top of gravel surfacing.
P.N.B. refers to Pacific Northwest Bell.
For Regulating Reservoir lining details, see (105).
The existing Terminal Ditch, within the pumping plant and regulating reservoir yard, shall be stripped of vegetation.
Ground entire fence around pumping plant and regulating reservoir yard as given on Dwg. 40-D-6376.

2-11-94 D-M.R.C.	AS BUILT BY 109, LTR. 1-24-94.
12-05-90 D-M.R.C.	REVISED EXCAVATION PAYLINES

For Information Only

ALWAYS THINK SAFETY

UNITED STATES
DEPARTMENT OF THE INTERIOR
BUREAU OF RECLAMATION
UMATILLA BASIN PROJECT
WEST EXTENSION IRRIGATION DISTRICT WATER EXCHANGE FACILITIES – OREGON

REGULATING RESERVOIR AND PUMPING PLANT

SITE PLAN

DESIGNED R.D. Baughman — TECHNICAL APPROVAL M.R. CASIAS
DRAWN R.D. Baughman — SUBMITTED JERRY R. DEXTER
CHECKED M.R. CASIAS — APPROVED JOHN D. SMART
CHIEF, CIVIL ENGINEERING DIVISION

DENVER, COLORADO — NOV. 16, 1989 — 1022-D-20

D (22 X 34)

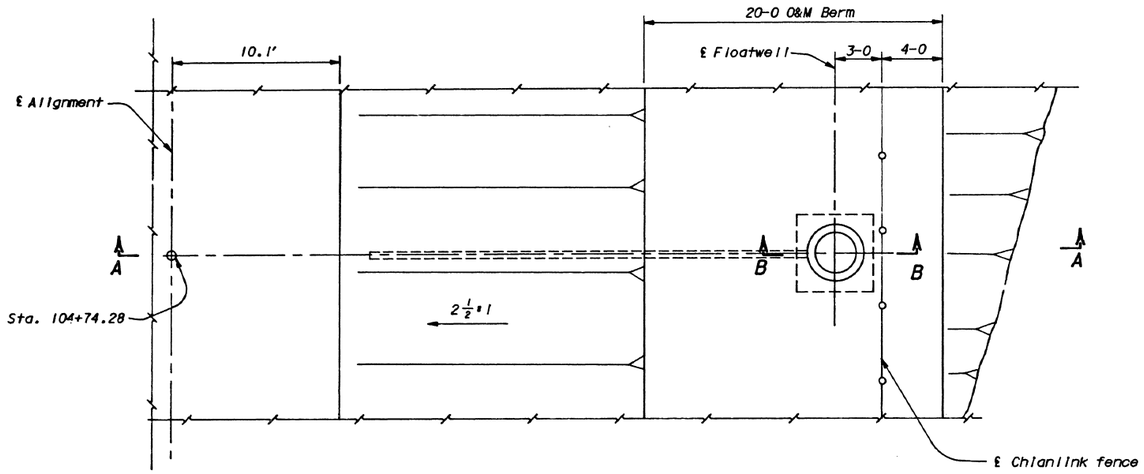

PLAN

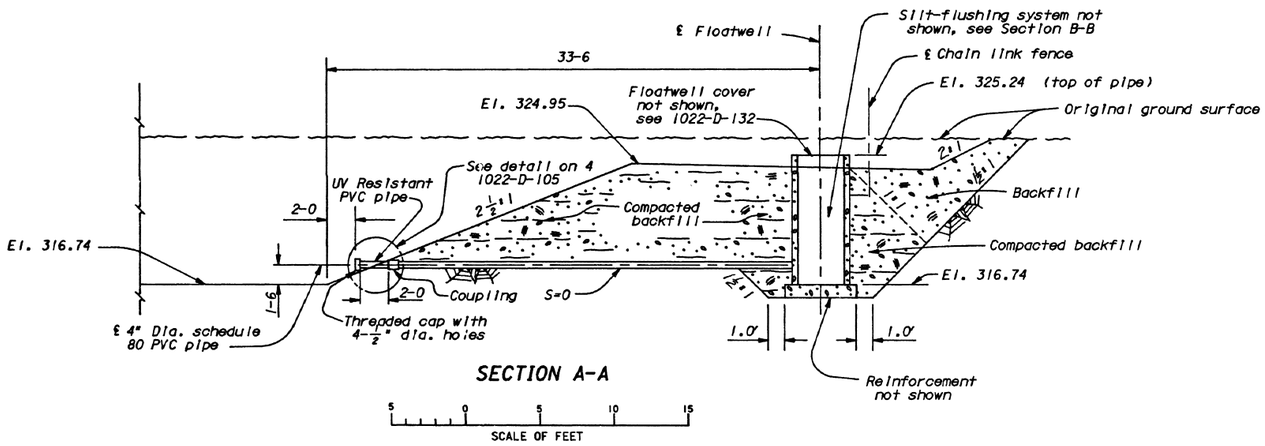

SECTION A-A

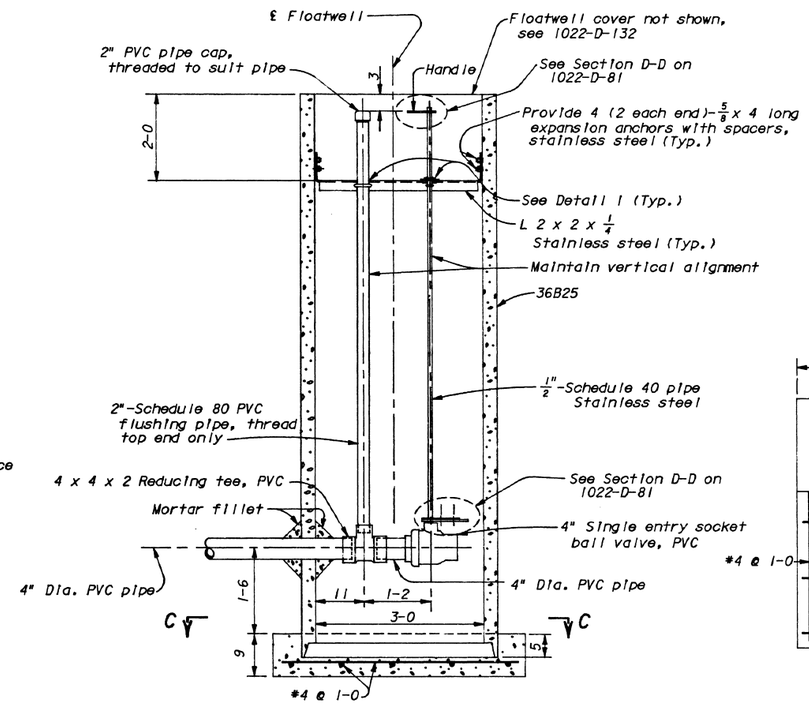

SECTION B-B

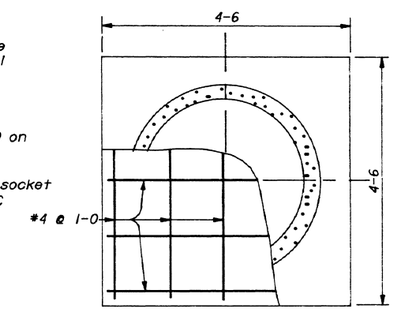

SECTION C-C

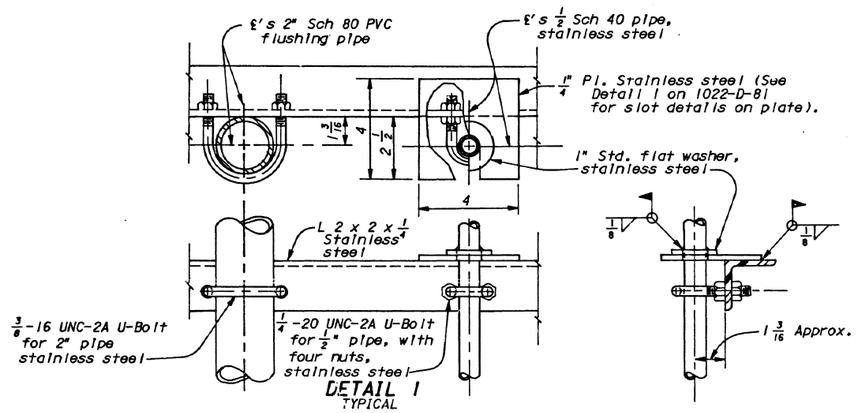

DETAIL 1
TYPICAL

NOTES

For reinforcement details, see 40-D-6263.
For general concrete outline notes and abbreviations, see 40-D-7006.
For Regulating Reservoir details, see 1022-D-20 and 1022-D-105.
For Floatwell water level transmitters, see 1022-D-152.

12-5-90 D-944	Revised side slope from 1 1/2:1 to 2:1 on right side of floatwell in section A-A, and excavation baylines from 1:1 to 1 1/2:1.

For Information Only

ALWAYS THINK SAFETY

UNITED STATES
DEPARTMENT OF THE INTERIOR
BUREAU OF RECLAMATION
UMATILLA BASIN PROJECT
WEST EXTENSION IRRIGATION DISTRICT WATER EXCHANGE FACILITIES-OREGON

REGULATING RESERVOIR

FLOATWELL AT ALIGNMENT STA. 104+74.28
PLAN, SECTIONS AND DETAIL

DESIGNED [signature] TECHNICAL APPROVAL [signature]
DRAWN C.S. Bufford SUBMITTED [signature]
CHECKED [signature] APPROVED [signature] CHIEF, WATER CONVEYANCE BRANCH

DENVER, COLORADO
COMPUTER DRAFTING
APRIL 18, 1990
1022-D-.18

2-11-94 D-[illegible]	AS BUILT BY 109, LTR. 1-24-94.

STRUCTURAL AND ARCHITECT AND ENGINEERING DESIGN SUPPORT SECTION
DGS: E251, 501 | 1 BE. DGN; 1 PW-DB

JUN 11 1991
0302 11 '91

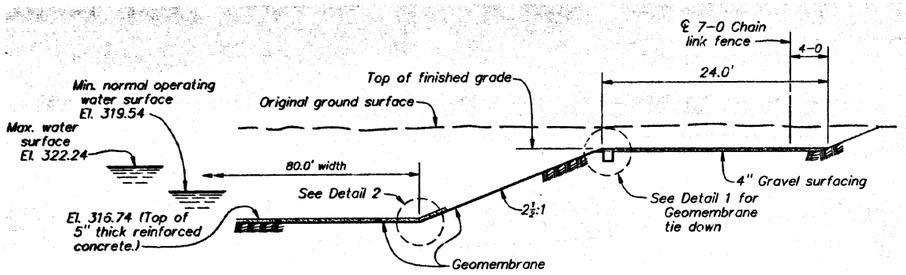

SECTION A-A (20)

8 0 8 16
SCALE OF FEET

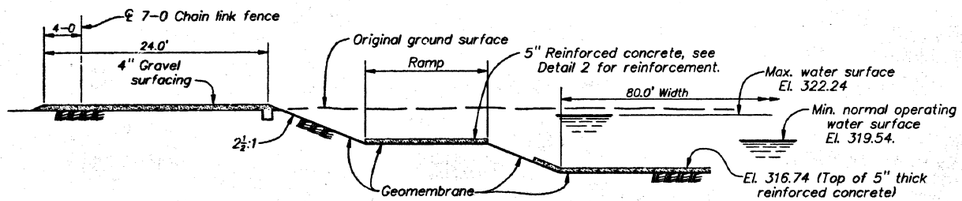

SECTION B-B (20)

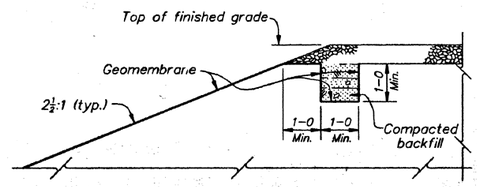

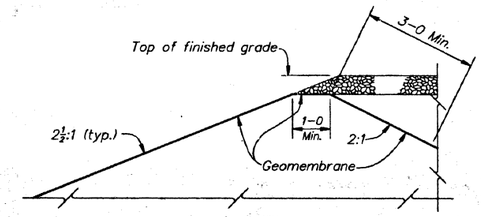

ALTERNATIVE GEOMEMBRANE TIEDOWN

DETAIL 1

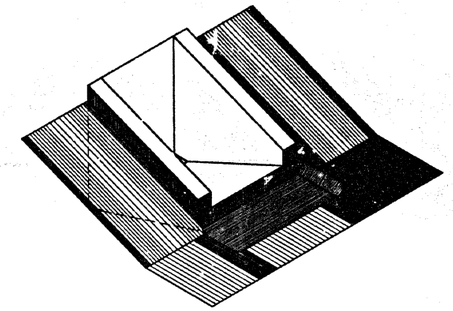

GEOMEMBRANE ANCHORAGE @ OVERFLOW WASTEWAY GATE INLET

(Anchorage details similar @ pumping plant inlet)

ISOMETRIC

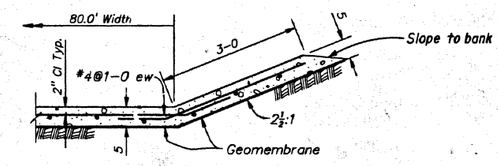

DETAIL 2

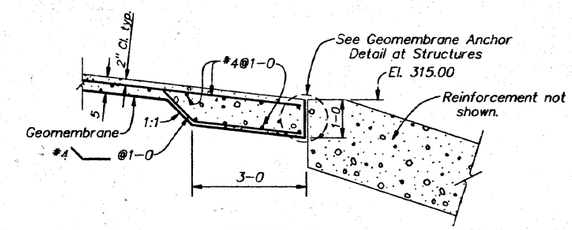

DETAIL 3 (22)

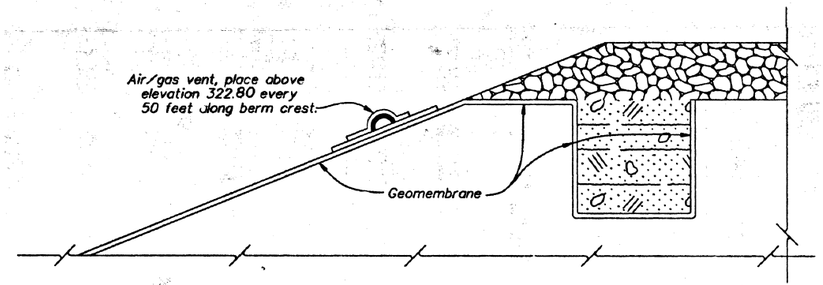

AIR/GAS VENT DETAIL

NOTES

For general notes, see 1022-D-76.
Construction Joints in the Regulating Reservoir invert shall be installed as required by the Contractor's concrete placing operations or where directed.

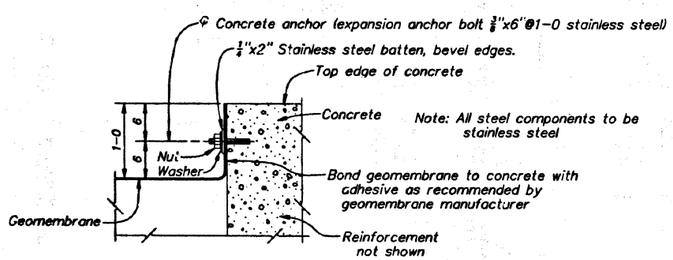

GEOMEMBRANE ANCHOR DETAIL AT STRUCTURES

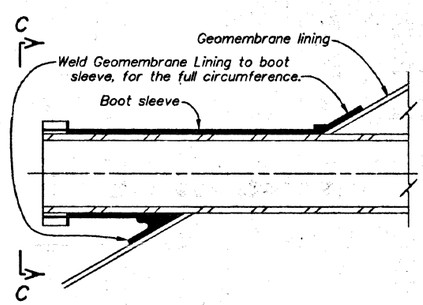

GEOMEMBRANE BOOT DETAIL

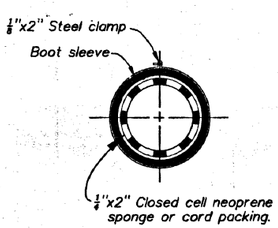

VIEW C-C

DETAIL 4 (118)
(NO SCALE)

For Information Only

2-11-94 D-[illegible]	AS BUILT BY 109, LTR. 1-24-94.

ALWAYS THINK SAFETY

UNITED STATES
DEPARTMENT OF THE INTERIOR
BUREAU OF RECLAMATION

UMATILLA BASIN PROJECT

WEST EXTENSION IRRIGATION DISTRICT WATER EXCHANGE FACILITIES - OREGON

REGULATING RESERVOIR

SECTIONS AND DETAILS

DESIGNED [illegible] TECHNICAL APPROVAL [illegible]
DRAWN [illegible] SUBMITTED [illegible]
CHECKED [illegible] APPROVED [illegible]
CHIEF, WATER CONVEYANCE BRANCH

DENVER, COLORADO APRIL 18, 1990 1022-D-105

PRINTED 1022D105.M2.19, RESERV 08.13.90 10:34:35 CALM PROJ=1004 and DM.III

D (22 X 34)

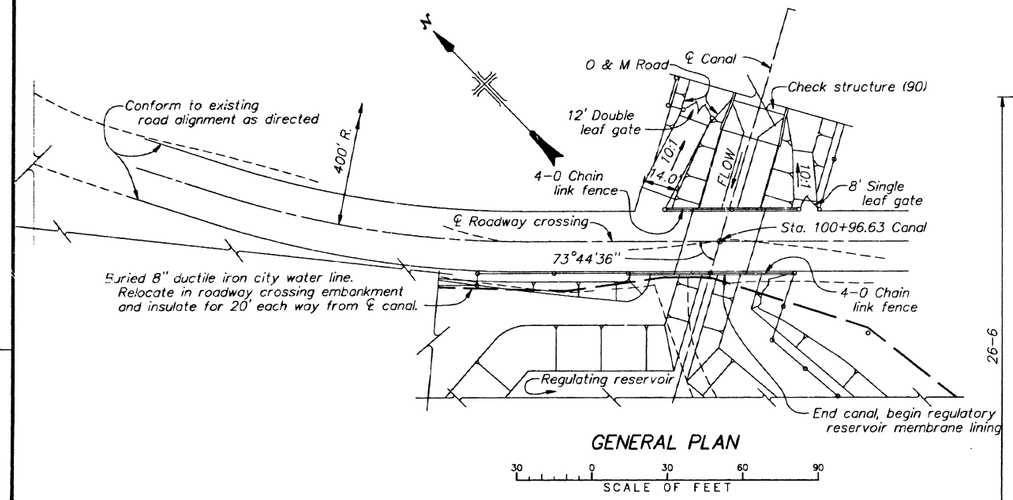

GENERAL PLAN

30 0 30 60 90
SCALE OF FEET

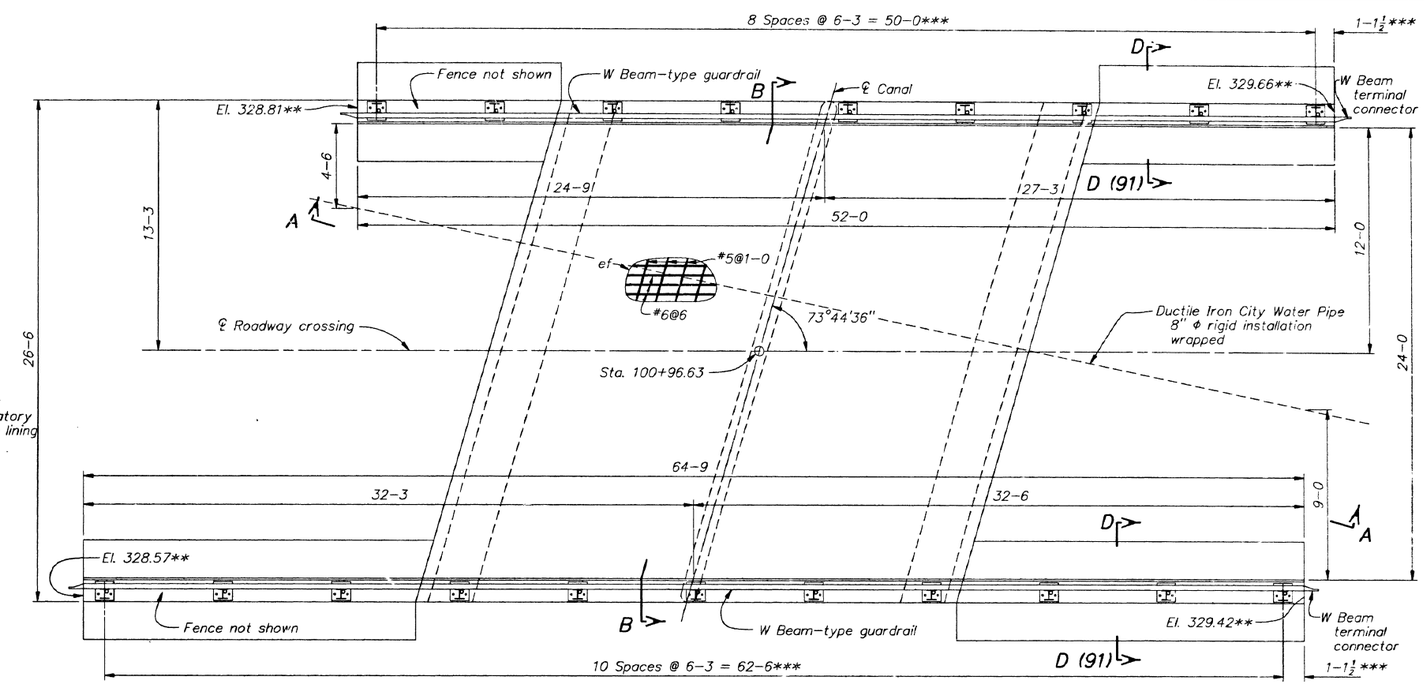

** Elevations are at top of curb
*** Dimensions are measured along top of wall

PLAN

1 0 5 10 15
SCALE OF FEET

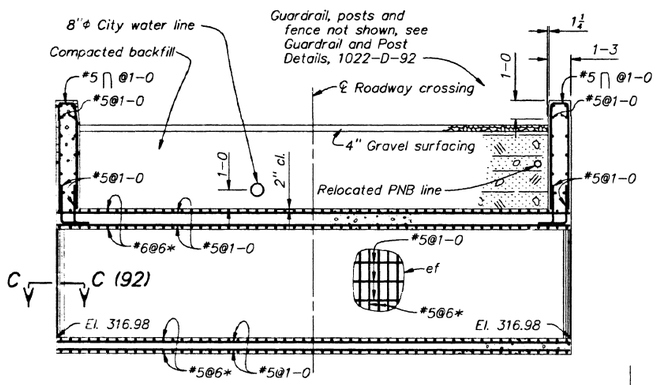

SECTION B-B

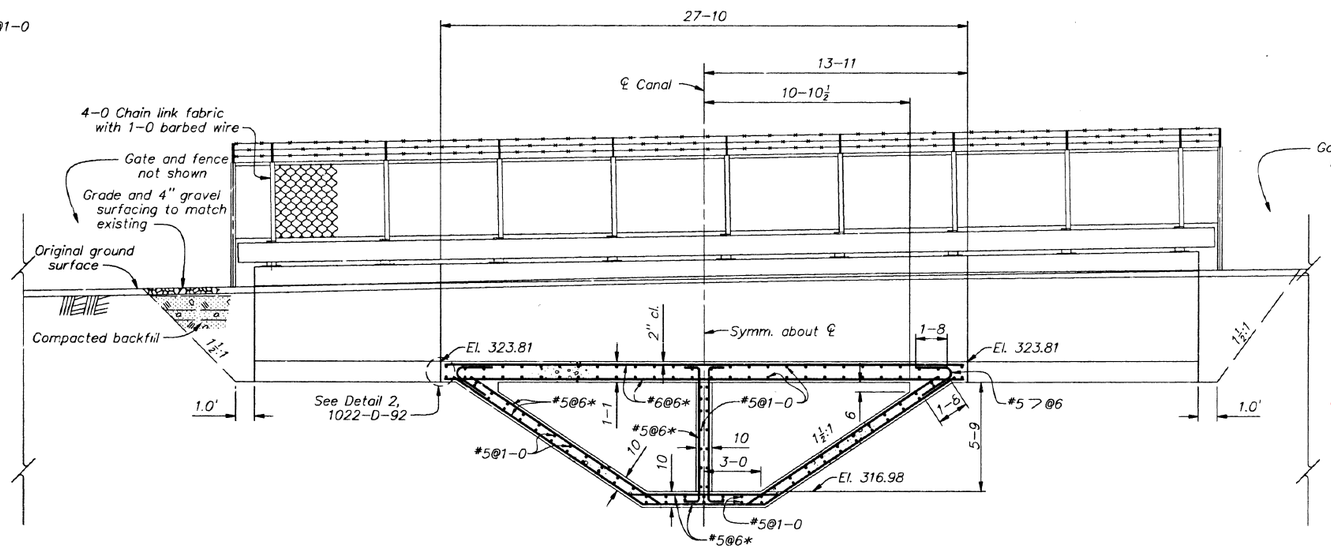

SECTION A-A

* Place reinf. parallel to ℄ roadway crossing

Gate and fence not shown

NOTE

For general notes, see 1022-D-76.

For Information Only

2-11-94 D-	AS BUILT BY 109, LTR. 1-24-94.
2-5-91 D- J.G.R.	REVISED EXCAVATION SLOPES FROM 1:1 TO 1½:1 IN SECTION A-A.
9-14-90 D- J.G.R.	MINOR REVISION IN SECTION A-A, REMOVED REFERNCES TO 8" DUCTILE IRON CITY WATER LINE FROM SECTION B-B AND GENERAL PLAN.

ALWAYS THINK SAFETY

UNITED STATES
DEPARTMENT OF THE INTERIOR
BUREAU OF RECLAMATION
UMATILLA BASIN PROJECT
WEST EXTENSION IRRIGATION DISTRICT WATER EXCHANGE FACILITIES – OREGON

CANAL
ROADWAY CROSSING
STA. 100+96.63
GENERAL PLAN, PLAN AND SECTIONS

DESIGNED K.A. SAYER TECHNICAL APPROVAL J.G. Romero
DRAWN K.A. SAYER SUBMITTED W.C. Cowan
CHECKED J.G. ROMERO APPROVED W.L. Long
CHIEF, WATER CONVEYANCE BRANCH

DENVER, COLORADO APRIL 18, 1990 1022-D-97

BIRD/DOS/CROSSINGS.MP/270, DWG5
April 01, 1994 11:40
Cadrna Release 9.0

D (22 X 34)