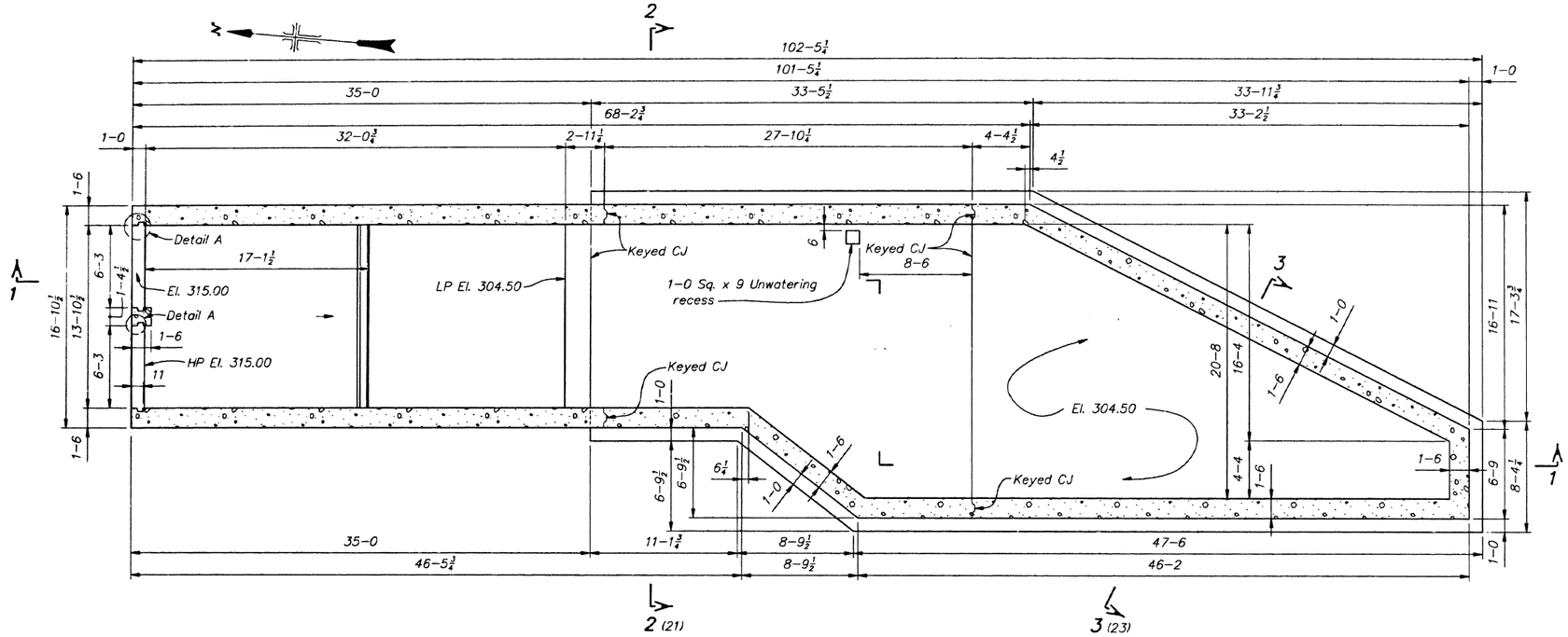

PLAN – SUMP SLAB

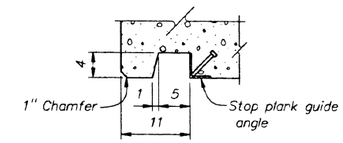

DETAIL A
(NO SCALE)

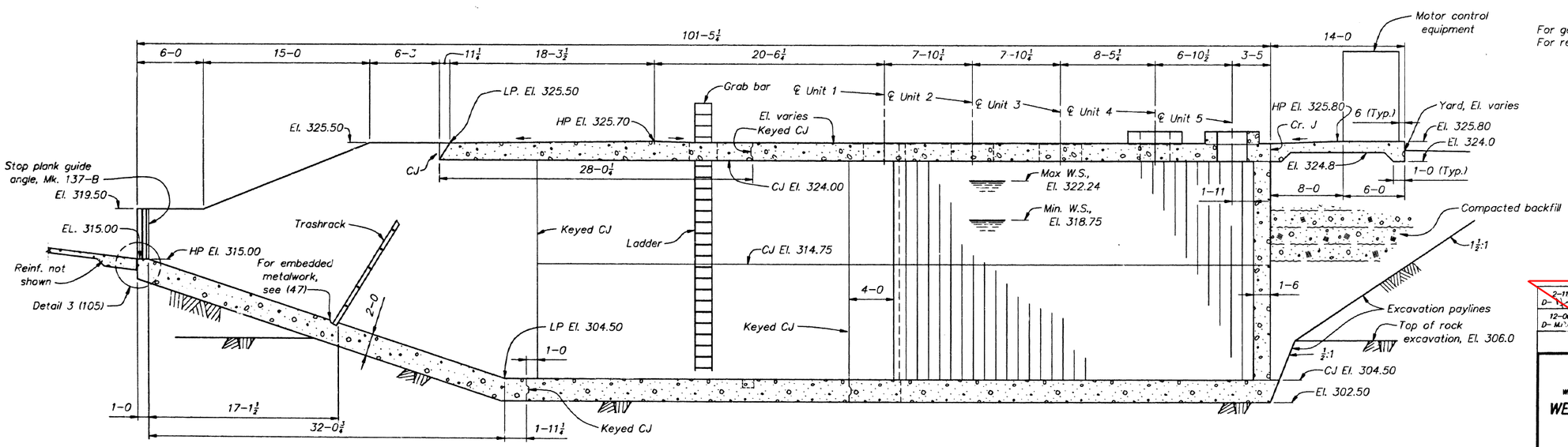

SECTION 1 (21)

NOTES

For general notes, see (21).
For reinforcement design, see (26).

1 0 5 10 15
SCALE OF FEET

For Information Only

2-11-94 D-Mark	AS BUILT BY 109, LTR. 1-24-94.
12-06-90 D-Mark	REVISED EXCAVATION PAYLINES

ALWAYS THINK SAFETY

UNITED STATES
DEPARTMENT OF THE INTERIOR
BUREAU OF RECLAMATION
UMATILLA BASIN PROJECT
WEST EXTENSION IRRIGATION DISTRICT WATER EXCHANGE FACILITIES – OREGON

WEID WATER EXCHANGE PUMPING PLANT

GENERAL ARRANGEMENT AND OUTLINE
PLAN – SUMP SLAB AND SECTIONS

DESIGNED K.A.WASLI TECHNICAL APPROVAL M.R. CASIAS
DRAWN R.D. Baughman, K.A. Wasli SUBMITTED I.G. TAYLOR
CHECKED M.R. CASIAS APPROVED JERRY R. DEXTER
CHIEF, PLANT STRUCTURES BRANCH

DENVER, COLORADO NOV. 6, 1989 1022-D-22

D (22 X 34)

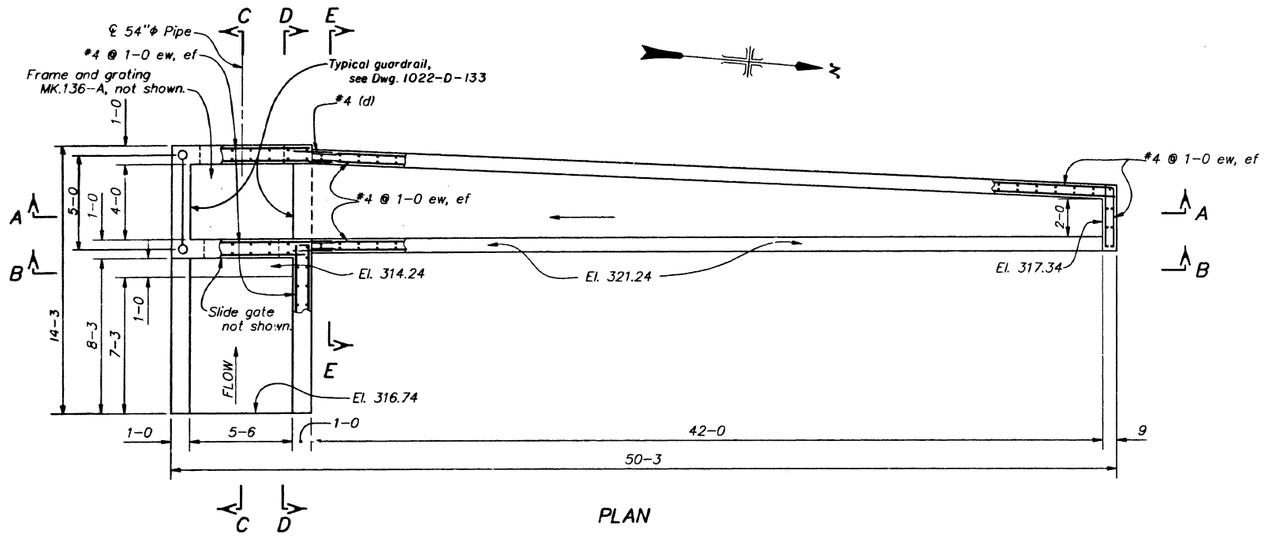

PLAN

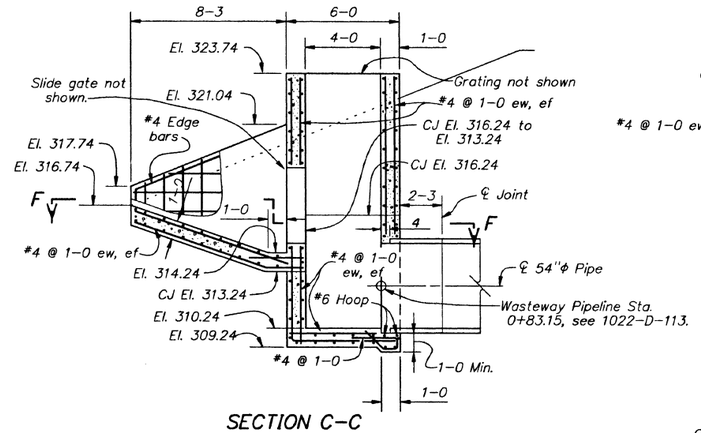

SECTION C-C

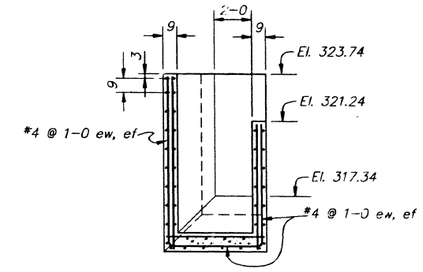

SECTION E-E

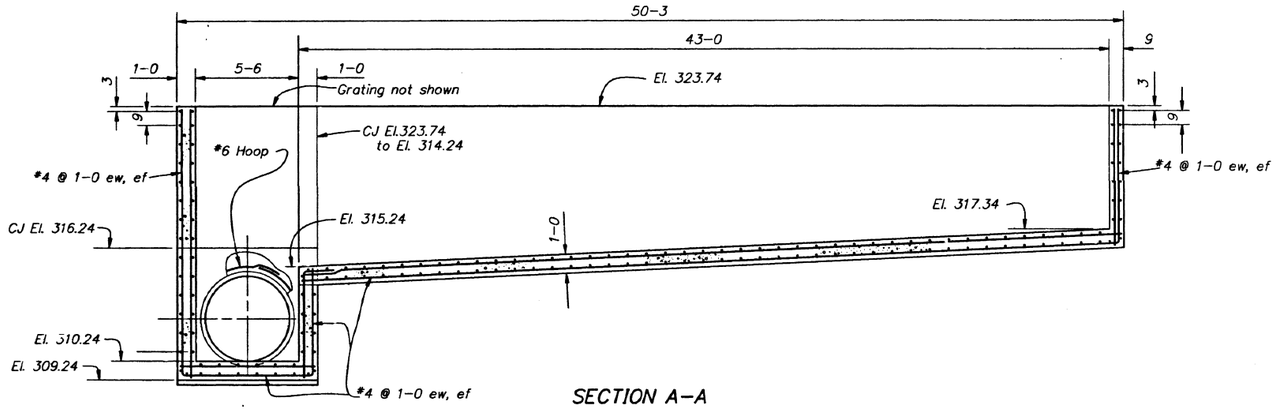

SECTION A-A

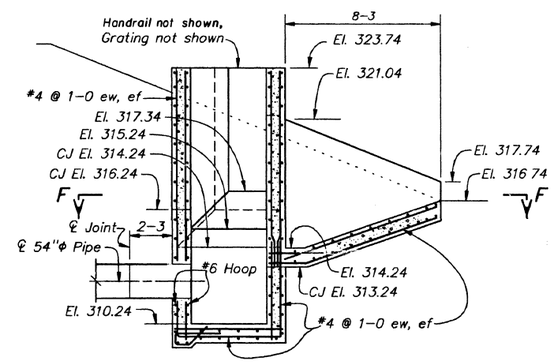

SECTION D-D

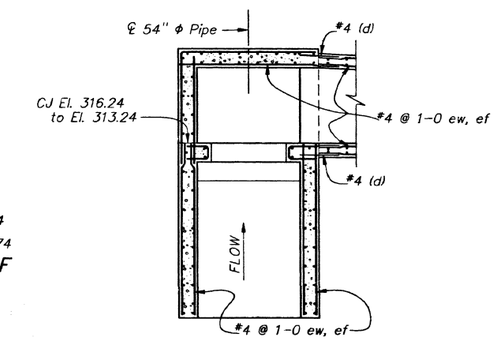

SECTION F-F

NOTES

For general notes, see 1022-D-76.
For wasteway location, see 1022-D-20.
For wasteway outlet pipe profile, see 1022-D-113.
For details of reservoir membrane lining attachment to structure, see 1022-D-105.
For grating, see 1022-D-136.
Reinforcement #4 @ 1-0 ew, ef unless otherwise shown.
Provide 48"x48" steel slide gate with manual lift, stem guides, and anchor bolts as required. See specifications.
Head @ ℄ = _____ 6 ft.
Back pressure= _____ 0 ft.

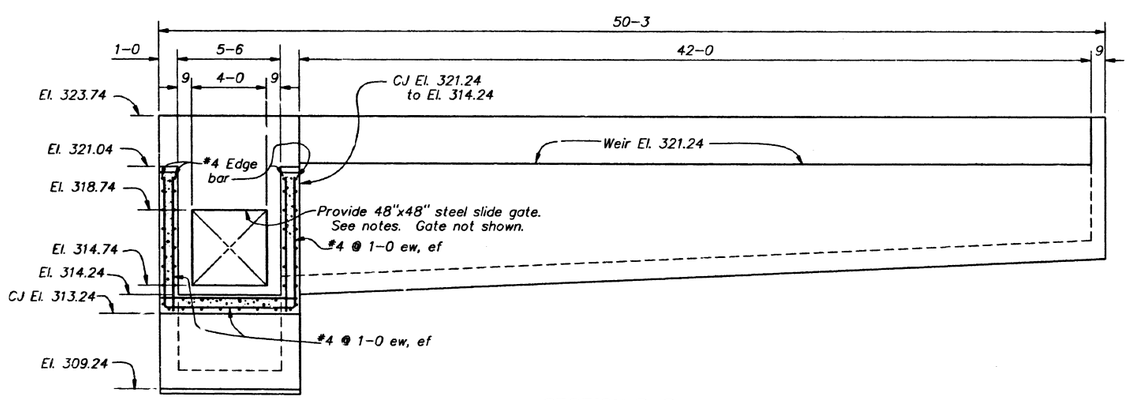

SECTION B-B

1 0 5 10 15
SCALE OF FEET

For Information Only

2-11-94 D-1991	AS BUILT BY 109, LTR. 1-24-94.

ALWAYS THINK SAFETY

UNITED STATES
DEPARTMENT OF THE INTERIOR
BUREAU OF RECLAMATION
UMATILLA BASIN PROJECT
WEST EXTENSION IRRIGATION DISTRICT WATER EXCHANGE FACILITIES - OREGON

REGULATING RESERVOIR
OVERFLOW WASTEWAY
PLAN AND SECTIONS

DESIGNED C.M. Clark — TECHNICAL APPROVAL
DRAWN J.R. Lemon — SUBMITTED
CHECKED — APPROVED
CHIEF, WATER CONVEYANCE BRANCH

DENVER, COLORADO — APRIL 18, 1990 — 1022-D-116

PRINT 1022D116M218, OVFLWR 06/03/90 CALMA FRISM-DGN and DWIII