VARI-RO™ DESALTING PILOT PLANT ADVANCEMENT PROJECT TESTING AND EVALUATION

FINAL TECHNICAL REPORT

Science Applications International Corporation
16701 West Bernardo Drive
San Diego, CA 92127

by
Willard D. Childs, P. E. (VPC)
Ali E. Dabiri, Ph.D. (SAIC)

Assistance Agreement No. 98-FC-81-10030

Desalination Research and Development Program Report No. 62

May 2001

U. S. DEPARTMENT OF THE INTERIOR
Bureau of Reclamation
Technical Service Center
Water Treatment Engineering & Research Group

REPORT DOCUMENTATION PAGE

Form Approved
OMB No. 0704-0188

Public reporting burden for this collection of information is estimated to average 1 hour per response, including the time for reviewing instructions, searching existing data sources, gathering and maintaining the data needed, and completing and reviewing the collection of information. Send comments regarding this burden estimate or any other aspect of this collection of information, including suggestions for reducing this burden to Washington Headquarters Services, Directorate for Information Operations and Reports, 1215 Jefferson Davis Highway, Suit 1204, Arlington VA 22202-4302, and to the Office of Management and Budget, Paperwork Reduction Report (0704-0188), Washington DC 20503.

1. AGENCY USE ONLY *(Leave Blank)*

2. REPORT DATE
May 2001

3. REPORT TYPE AND DATES COVERED
Final

4. TITLE AND SUBTITLE
VARI-RO™ DESALTING PILOT PLANT ADVANCEMENT PROJECT TESTING AND EVALUATION

5. FUNDING NUMBERS
Assistance Agreement No. 98-FC-81-10030

6. AUTHOR(S)
Willard D. Childs, P.E. (VPC)
Ali E. Dabiri, Ph.D. (SAIC)

7. PERFORMING ORGANIZATION NAME(S) AND ADDRESS(ES)
Science Applications International Corporation
16701 West Bernardo Drive
San Diego, CA 92127

8. PERFORMING ORGANIZATION REPORT NUMBER

9. SPONSORING/MONITORING AGENCY NAME(S) AND ADDRESS(ES)
Bureau of Reclamation
Denver Federal Center
P.O. Box 25007
Denver, CO 80225-0007

10. SPONSORING/MONITORING AGENCY REPORT NUMBER
Desalination Research and Development Program
Report No. 62

11. SUPPLEMENTARY NOTES

12a. DISTRIBUTION/AVAILABILITY STATEMENT
Available from the National Technical Information Service, Operations Division, 5285 Port Royal Road, Springfield, Virginia 22161

12b. DISTRIBUTION CODE

13. ABSTRACT *(Maximum 200 words)*

This pilot plant project was directed toward combining the VARI-RO Direct Drive Engine (VRO-DDE) technology with the highly efficient VARI-RO Integrated Pumping and Energy Recovery (VRO-IPER) system for reverse osmosis (RO) desalting. The engine technology provides the capability to use direct thermal power to replace more expensive electric power. The ways that the VRO-DDE technology reduces desalting cost, and environmental impact, includes the following:

1) use of RO, the most energy efficient desalination process;
2) use of efficient positive displacement pumping and energy recovery;
3) use of thermal energy sources that are lower cost than electricity; and
4) the low emissions use of these lower-cost thermal energy sources.

This technology (patents issued and pending) will make desalination a reliable, cost effective method to augment natural water sources; and help to mitigate water shortages in many locations in the U.S. and other regions of the world.

This technological advancement has resulted from the innovative cross-fertilization of the following technologies: modern hydraulic power transmission, computer control, desalting processes, and recuperative Brayton cycle thermal energy conversion.

14. SUBJECT TERMS - -
desalting/pumping/energy recovery/reverse osmosis/direct drive/engine/high efficiency/low emissions/variable flow/positive displacement

15. NUMBER OF PAGES
38 (excluding appendices)

16. PRICE CODE

17. SECURITY CLASSIFICATION OF REPORT	18. SECURITY CLASSIFICATION OF THIS PAGE	19. SECURITY CLASSIFICATION OF ABSTRACT	20. LIMITATION OF ABSTRACT
UL	UL	UL	UL

VARI-RO™ DESALTING PILOT PLANT ADVANCEMENT PROJECT
TESTING AND EVALUATION

FINAL TECHNICAL REPORT

Science Applications International Corporation
16701 West Bernardo Drive
San Diego, CA 92127

by
Willard D. Childs, P. E. (VPC)
Ali E. Dabiri, Ph.D. (SAIC)

Assistance Agreement No. 98-FC-81-10030

Desalination Research and Development Program Report No. 62

May 2001

U. S. DEPARTMENT OF THE INTERIOR
Bureau of Reclamation
Technical Service Center
Water Treatment Engineering & Research Group

ACKNOWLEDGMENTS

We would like to thank the research organizations, consultants, and equipment suppliers that assisted in the success of this project. These team members are summarized in the introduction of this Final Technical Report.

Special thanks go to the following individuals and organizations for their contributions during the design evolution, technical reviews, and system evaluation: Orrin Albert, Cal-West Machining, Inc.; Paul C. Hanlon, C. Lee Cook; the late Helmut Weber, Sc.D., Flow Energy Engineering; Thomas E. Duffy, Performance Steam Systems; Ron Woyski, Shore Western Manufacturing, Inc.; and American Tool & Engineering Corporation.

In addition, we would like to extend our appreciation to the U. S. Bureau of Reclamation (USBR) for their support in the implementation of this project.

Mission Statements

U.S. Department of the Interior

The mission of the Department of the Interior is to protect and provide access to our Nation's natural and cultural heritage and honor our trust responsibilities to tribes.

Bureau of Reclamation

The mission of the Bureau of Reclamation is to manage, develop, and protect water and related resources in an environmentally and economically sound manner in the interest of the American public.

Disclaimer

Information contained in this report regarding commercial products or firms was supplied by those firms. It may not be used for advertising or promotional purposes and is not to be construed as an endorsement of any product or firm by the Bureau of Reclamation.

The information contained in this report was developed for the Bureau of Reclamation; no warranty as to the accuracy, usefulness, or completeness is expressed or implied.

CONTENTS

Page

1. INTRODUCTION 1
   1.1 Project Definition and Team 1
   1.2 Objectives and Technical Benefits 2
   1.3 Specific Water Problem Discussion 3
      1.3.1 "Low Energy" Seawater Desalination 3
      1.3.2 Reasons for Seawater Desalination 4
   1.4 Scope of Work and Methodology 4
2. CONCLUSIONS AND RECOMMENDATIONS 4
3. VARI-RO SYSTEM FEATURES AND BENEFITS 6
   3.1 VARI-RO™ Integrated Pumping & Energy Recovery 6
      3.1.1 VRO-IPER Overview 6
      3.1.2 VRO-IPER System Description 8
   3.2 VARI-RO Direct Drive Engine 9
      3.2.1 VRO-DDE Overview 9
      3.2.2 Lower Emissions and Energy Source Variety 11
      3.2.3 Benefits of the Direct Drive Engine System 12
      3.2.4 Improved Fuel-To-Water Efficiency 12
      3.2.5 VRO-DDE System Description 13
   3.3 Improved Water Production vs. Energy Consumption 15
   3.4 VARI-RO System Commercialization Benefits 18
   3.5 VARI-RO System Operating Versatility 19
      3.5.1 Unique DUAL-USE Capability 19
      3.5.2 STAND-ALONE Capability 19
4. PILOT PLANT PARAMETERS AND CONFIGURATION 20
   4.1 Pilot Plant System General Parameter Selection 20
   4.2 System Test Configuration 20
5. TESTING PROGRAM 22
   5.1 Test Setup and Methodology 22
   5.2 Electronic Control, Diagnostics, Data Acquisition, and Analysis 22
   5.3 Functional Results 24
   5.4 Operating at "Bench Mark" Conditions 25
6. FULL-SCALE CONFIGURATION 25
   6.1 Configuration, Performance, and Trade-off Considerations 26
   6.2 Proposed Demonstration Unit Performance Projections 27
   6.3 Full-scale Unit Configuration and Performance Projections 29
7. FACILITY OPTIMIZATION WITH THE VARI-RO SYSTEM 31
   7.1 Optimizing Energy Use with the VARI-RO System 31
   7.2 Gas Turbine Exhaust Thermal Energy Recovery Example 31
   7.3 Recovery Ratio Optimization with VARI-RO Pumping 32
8. ECONOMIC ANALYSIS 35
9. CONTINUED DEVELOPMENT RECOMMENDATIONS 36
   9.1 VARI-RO Direct Drive Engine Pilot Plant Unit 36
   9.2 Demonstration of Full-scale Capacity Unit 36
10. BIBLIOGRAPHY 37

FIGURES

Page

FIGURE 3-1 VRO-IPER System Block Diagram....9
FIGURE 3-2 Fuel-To-Water Efficiency Improvement with VARI-RO Systems....13
FIGURE 3-3 VARI-RO Direct Drive Engine System Block Diagram....15
FIGURE 3-4 Improved Water Production from a Given Power Source....17
FIGURE 3-5 Improved Water Production Calculations....18
FIGURE 4-1 Test System Block Diagram....21
FIGURE 4-2 Test System Water Displacement Unit....21
FIGURE 6-1 Simplified Diagram of Combined VRO-IPER and VRO-DDE Systems....26
FIGURE 6-2 Demonstration Energy Cost, Case B-1....27
FIGURE 6-3 Demonstration Energy Cost, Case B-2....28
FIGURE 6-4 Full Scale Energy Cost, Case C-1....30
FIGURE 6-5 Full Scale Energy Cost, Case C-2....30
FIGURE 7-1 Direct Drive Engine Gas Turbine Exhaust Desalting System....32
FIGURE 7-2 Lower Pressure and Permeate TDS at Lower Recovery Ratios....33
FIGURE 7-3 Fewer Membrane Elements and Lower Permeate TDS at Lower Recovery Ratios....33
FIGURE 8-1 Relative Energy Consumption for Seawater Desalination....35

APPENDICES

A. VRO-DDE™ Configuration, Performance, and Trade-off Considerations.

B. VRO-DDE™ Proposed Demonstration Unit Performance Projections.

C. VRO-DDE™ Full-scale Unit Configuration and Performance Projections.

GLOSSARY

AF	acre-foot = 326,000 U. S. gallons (approximately)
AFY	acre-feet per year
BAR	metric pressure unit = 100 kpa = 14.5 PSI = 0.9869 atmospheres
BEP	best-efficiency-point
BWRO	Brackish Water Reverse Osmosis process
C	Concentrate
CL	Closed Loop
CO_2	Carbon Dioxide
CP-ERT-VFD	Centrifugal Pump, Energy Recovery Turbine, Variable Frequency Drive system
CPM	Cycles Per Minute
CP	Centrifugal Pump
CRA	Colorado River Aqueduct
dpM	delta pressure (pressure drop) Membranes
e	efficiency
ECU	Electronic Control Unit
ERV	Energy Recovery Valves
F	Feed
FTV	Flow Throttle Valves
FTR	Final Technical Report
FWV	Feed Water Valves
GDU	Gas Displacement Unit
GPD	U. S. Gallons Per Day
GPM	U. S. Gallons Per Minute

GLOSSARY (Continued)

HC	Hydraulic Cylinder
HDU	Hydraulic Drive Unit
HEU	Heat Exchange Unit
hp	Horsepower
HP	Hydraulic Pump
HR	Heat Recovery
HSE	Heat Source Exchanger
l/m	liters per minute
kgal	1000 U. S. gallons
kw	kilowatt
kwh	kilowatt hour
kwh/kgal	kilowatt hours per 1000 U. S. gallons
kwh/m^3	kilowatt hours per cubic meter
m^3/d	meters cubed per day
$1000m^3/d$	1000 meters cubed per day
MAF	Million acre-feet
MWD	Metropolitan Water District of Southern California
MED	Multi-Effect Distillation process
MGD	Million U. S. Gallons per Day
mmBTU	million British Thermal Units
MSF	Multi-Stage Flash distillation process
MW	Megawatts of electric power
NPSH	Net Positive Suction Head
P	Product
pC	pressure, Concentrate
pD	pressure, Discharge
pM	pressure, Membrane
PD	Positive Displacement
PP	Plunger Pump
ppm	parts per million
PSI	pounds per square inch
PSID	pounds per square inch differential
PW	Pelton Wheel turbine
q	quantity rate = flow rate
RFP	Reverse Flow Pump turbine
RO	Reverse Osmosis desalting process
RPM	Revolutions Per Minute
RR	Recovery Ratio of reverse osmosis process = Product flow rate / Feed flow rate
SCL	Semi-Closed Loop
sec	specific energy consumption = kwh/kgal or kwh/m^3
shp	shaft horsepower
SP	Sump Pumping
SWP	California State Water Project
SWP Nth>Sth	California State Water Project from Northern to Southern California
SWRO	Seawater Reverse Osmosis process
TDS	Total Dissolved Solids in parts per million
TWC	Total Water Cost
VFD	Variable Frequency Drive
VARI-RO™	Variable flow pumping and energy recovery technology for RO
VRO	VARI-RO systems
VRO-IPER	VARI-RO Integrated Pumping and Energy Recovery system
VRO-DDE	VARI-RO Direct Drive Engine system
WC	Water Cylinder
WDU	Water Displacement Unit

DEFINITIONS

Existing Methods	=	methods presently being used to desalt seawater, including MSF, MED, and RO. In this report, the existing methods often refer to RO desalting systems using conventional high pressure feed water pumping and energy recovery, consisting of: centrifugal pumps, plunger pumps, energy recovery turbines, and variable frequency drives for electric motors.

TRADEMARKS

SAIC is a registered trademark of Science Applications International Corporation. VARI-RO™, VRO-IPER™, VRO-EMD™, VRO-DDE™, VPC™, and VARI-POWER™ are trademarks of the VARI-POWER Company.

SI METRIC CONVERSIONS

From	To	Multiply by
ft	m	3.048 000 E - 01
in	m	2.540 000 E - 02
ft^2	m^2	9.290 304 E - 02
kgal	m^3	3.785 412
Mgal	m^3	3.785 412 E + 3
acre-ft	m^3	1.233 489 E + 3
lb/in^2	kpa	6.894 757
lb/in^2	BAR	6.894 757 E - 02
°F	°C	$t°_C = (t°_F - 32)/1.8$

1. INTRODUCTION

1.1 Project Definition and Team

The Advancement Project team included a coalition of private organizations, as listed below. This Final Technical Report (FTR) resulted from the efforts of this team. The Bureau of Reclamation, Desalination Research & Development (DesalR&D) Program, sponsored the Pilot Plant project under Assistance Agreement No. 98-FC-81-10030.

This project resulted from the Bureau of Reclamation's program to increase the efficiency of desalting and water treatment plants, toward providing more usable water in the Western United States, and other regions. This Phase II assistance agreement was awarded to determine the feasibility, and efficiency improvement potential, of combining the VARI-RO Direct Drive Engine (VRO-DDE) technology with the highly efficient VARI-RO Integrated Pumping and Energy Recovery (VRO-IPER) system for reverse osmosis (RO) desalting (patents issued and pending). The VRO-IPER system combines both the feedwater pumping and the concentrate energy recovery into an integrated system, which utilizes power input from an electric motor or other prime mover. The VRO-IPER system was tested and evaluated under a previous Phase II Pilot Plant project (Childs and Dabiri, 1998), and was previously referred to as the VARI-RO Electric Motor Drive (VRO-EMD) system.

The engine technology (VRO-DDE) provides the capability to use direct thermal power to replace more expensive electric power for the RO process, thereby cutting out the "middleman" energy conversion losses with a "low emissions" energy conversion method.

The contract requirement was that the offerers, and their cost sharing partners (team members), conduct the project so that the testing and evaluation is applicable to full-scale production systems.

The following supplementary reports are referenced in the appendices, which support the evaluation results of this project:

A. VRO-DDE™ Configuration, Performance, and Trade-off Considerations.

B. VRO-DDE™ Proposed Demonstration Unit Performance Projections.

C. VRO-DDE™ Full-scale Unit Configuration and Performance Projections.

(NOTE: Because of expected future patent applications, the information in appendices "A", "B", and "C" is considered confidential to Vari-Power Company; and cannot be released to the general public. These appendices can be made available for review by interested parties through the execution of a Confidentiality Agreement.)

The following team members provided funding, advisory services, and design assistance for this pilot plant project:

RESEARCH ORGANIZATIONS

SAIC	Science Applications International Corp.	San Diego, CA
VPC	Vari-Power Company	Encinitas, CA

CONSULTING ORGANIZATIONS

FEE	Flow Energy Engineering	San Diego, CA
PSI	Performance Steam International	San Diego, CA

EQUIPMENT SUPPLIERS

AES	Aerospace Equipment Systems, AlliedSignal (now GE Honeywell Environmental Control Systems)	Torrance, CA
ATE	American Tool & Engineering Corp.	San Diego
CW	Cal-West Machining, Inc.	Orange, CA
COOK	C. Lee Cook	Louisville, KT
ESSEF	Essef Corporation, CodeLine Division	Escondido, CA
KMS	Koch Membrane Systems / Fluid Systems	San Diego, CA
SW	Shore Western Manufacturing, Inc.	Monrovia, CA

The benefits provided toward this desalting advancement, by the strategic affiliation of the team members, includes:

Research Organizations:

Provide contract and project management.

Provide expertise in system engineering and analysis.

Consulting Organizations:

Provide thermodynamic energy conversion knowledge to the project.

Equipment Suppliers:

Provide seed capital to stimulate the development.

Provide valuable assistance with the design evolution.

Provide manufacturing knowledge.

Reduce the capital investment for manufacturing of future full-scale products.

1.2 Objectives and Technical Benefits

The overall objective of the project effort was to perform technology development and analysis toward reducing the cost of potable water produced by desalination. More specifically, this project was directed at the use of alternate thermal-energy-conversion technologies to drive pumping and energy recovery systems for the reverse osmosis (RO) desalination process. This included developing of technologies that are more energy efficient and environmentally attractive than existing RO and thermal desalting methods.

The focus of this project was toward the technical validation of a new approach to utilize direct thermal energy to drive positive displacement pumping and energy recovery for reverse osmosis desalination. The technology to be studied is known as the VARI-RO Direct Drive Engine (VRO-DDE) system, which is used in conjunction with the VARI-RO Integrated Pumping and Energy Recovery (VRO-IPER) system. This technology offers the potential to substantially reduce energy cost, provide other operational benefits, and reduce environmental impact when compared to existing desalting methods that are presently being used commercially.

This project has shown that the technology is technically viable, can provide energy savings, and can provide other operational benefits for seawater reverse osmosis desalination (SWRO), and that it can also be configured for brackish water reverse osmosis desalination

(BWRO). The project has answered some of the practical questions relative to the implementation of this new approach for large-scale desalination. These practical questions included: mechanical design, performance, maintenance, and economic benefits.

1.3 Specific Water Problem Discussion

Presently 90% of the water for the San Diego region is imported, with the remaining 10% coming from runoff stored in local reservoirs. Also, other Southern California regions, including Los Angeles, import a high percentage of their water for urban and other needs. A major portion of the water comes from Northern California, via the State Water Project (SWP); or from the Colorado River, via the Colorado River Aqueduct (CRA). Population increase, the six year drought (1985-1991), projected shortage of water supply from the SWP and CRA, and contingency plans for supply disruption (such as earthquakes) have stimulated a search for alternative water supplies for the Southern California region.

The alternative supplies under consideration for Southern California and other water short regions include:

1. Paying farmers to improve conservation methods, thus making agricultural water available for importation to urban regions.
2. Sewage water reclamation for irrigation (freeway landscaping, golf courses, etc.), and industrial uses.
3. Sewage water repurification, which adds additional steps to the reclamation process to allow this water source to be added to the domestic water supply.
4. Desalination of brackish groundwater, and reducing the salinity of Colorado River water.
5. Seawater desalting, which would be added directly to the domestic water supply.

Of these alternatives, only seawater desalting adds new water to a water supply system that is presently considered to be nearing maximum capacity. Under the combination of increased population, and emergencies such as severe drought, seawater desalination would help to disaster-proof the water supply system.

NOTE: In the year 2000, an agreement was reached between California and several other Western States on sharing the available water from the Colorado River. This agreement states that California must reduce its water supply from this source from the present 5 million acre-feet per year to 4.4 MAF within 15 years. This will stimulate California to look seriously at alternative methods to meet this requirement.

1.3.1 "Low Energy" Seawater Desalination

An often quoted argument against seawater desalination has been that it is energy intensive. This was previously a true statement for distillation methods, such as multi-stage flash (MSF), multi-effect distillation (MED), and mechanical vapor compression (MVC). It was also previously true for seawater reverse osmosis (SWRO) until there were significant advancements in energy recovery.

However, it was shown in a previous report (Childs and Dabiri, 1998), FIGURE 3-1, page 14, that with the VARI-RO system (VRO-EMD — now known as VRO-IPER) the SWRO energy consumption would be less than pumping water via the State Water Project from Northern to Southern California (SWP Nth > Sth).

As a further example that seawater desalination is no longer considered energy intensive, a major facility is proceeding near Tampa, Florida, with a capacity of 25 MGD (million gallons per day), (95,000 m^3/d), about 25,000 acre-feet (AF) per year. This facility will be expandable to 35 MGD. This facility will use the energy efficient SWRO process, rather than any of the energy intensive distillation processes.

Analysis conducted during this pilot plant project has shown that the VRO-DDE technology can provide additional energy cost reduction beyond the previously tested VRI-IPER system; thereby providing an additional improvement toward "low energy" seawater desalination.

1.3.2 Reasons for Seawater Desalination

The reasons that seawater desalination should now be considered as a viable alternative include:

1. New water is added to the water supply system that is reaching maximum capacity;
2. Drought and disruption proofing capability;
3. Reverse osmosis desalination is a proven method and is in use around the world;
4. Energy consumption can now be lower by using the VARI-RO Integrated Pumping and Energy Recovery system;
5. Energy cost, and environmental impact, can be further improved by using the VARI-RO Direct Drive Engine system;
6. Costs are now competitive to other alternatives; and
7. Acceptance by the public can readily be obtained.

These reasons provide ample incentive to continue the development, and improvement, of the VARI-RO systems. This will assure that this advanced technology becomes a proven method to supply desalted seawater when it is needed in California, and elsewhere around the world.

1.4 Scope of Work and Methodology

The methodology for conducting the work for the project was to utilize thermodynamic experts to verify that the original theoretical approach is sound, and to perform thermodynamic analysis to predict the performance potential of the system as compared to existing methods.

From this analysis, preliminary system configurations were devised to implement the theoretical designs. The system configurations were then incorporated into preliminary mechanical designs, which included the selection of sealing and wear surface methods for long term operation under a high temperature environment.

Equipment was taken from the original VRO-IPER water displacement unit, and reconfigured into an assembly suitable for the addition of the VRO-DDE gas displacement unit. The electronic control unit was revised, and reprogrammed, to include the controls for the engine system and the added instrumentation. The hydraulic drive unit from the original system was used to supply input power. To simulate the thermal energy input that would normally be supplied from a burner, a high-pressure electric heater was used. The reason for using an electric heater for the proof-of-concept test system was that it would provide thermal energy input that would be convenient, easy to control, and easy to measure.

The equipment was set up in San Diego at a test site provided by American Tool & Engineering Corporation.

The methodology for establishing the viability of the VRO-DDE system was to first show proof-of-function. Initially baseline performance of the original test system for pumping water was to be established. The engine system was then to be operated to determine its function and performance.

Using analytical methods, the performance has been projected to full-scale units.

2. CONCLUSIONS AND RECOMMENDATIONS

The VARI-RO technology is a multi-purpose pumping and energy recovery system for reverse osmosis desalination. It includes the VARI-RO Integrated Pumping and Energy Recovery (VRO-IPER) version, which has been previously pilot plant tested (Childs and Dabiri,

1998); and the VARI-RO Direct Drive Engine (VRO-DDE) version, which is the subject of this Advancement Project. The analytical projections made during the project have shown that the technology can significantly reduce the cost of desalted water, primarily by reducing the energy requirements. It has also been shown that the VARI-RO system has installation and operational advantages over conventional, commercially-available systems for thermal energy conversion and reverse osmosis pumping and energy recovery. Other economic benefits can be provided by operating at lower recovery ratios, especially for some site locations where electric power rates are high. The economic and operational benefits over other methods show that the technology is suitable for both seawater and brackish water reverse osmosis (SWRO & BWRO) desalting.

From the work performed during this project, including the technical and economic evaluations, the conclusions and recommendations below were reached about the VARI-RO Direct Drive Engine technology.

1. This technology, using modern hydraulic power and control methods, is technically viable and is suitable for desalting facilities of low, medium, or high capacity.
2. The technology provides the capability to revolutionize the water desalination industry — by improving efficiency, effectiveness, emission reduction, and adaptability. This conclusion is reached as a result of this test and evaluation project, and because similar hydraulic technology has previously revolutionized the construction, mining, and tunneling industries. The ruggedness, performance, and control features of hydraulics far surpassed methods that were previously being used in these industries.
3. The analysis, and system engineering, has shown that the technology can provide energy cost savings under seawater operating conditions. The technology can also provide energy cost savings under brackish water operating conditions, especially for moderate to high salinity brackish water.
4. Because both the engine system and the pumping system of the VARI-RO technology are positive displacement, it has particular advantage for desalination systems that operate under variable membrane pressure conditions. The variable membrane pressures result from changes of salinity, feed water pressure, and membrane fouling.
5. The economic analysis has shown VRO-DDE energy cost savings potential of 40% to 70% as compared to conventional RO pumping. Compared to MSF distillation methods, 9 times the water can be produced from a given energy quantity input.
6. For a 25 MGD (95,000 m^3/d) SWRO facility savings of $2 to $3.5 million per year were projected for fuel costs of $3 to $6 mmBTU, respectively. This was compared to a system using Pelton wheel energy recovery — at electric power rates of $0.06/kwh.
7. It is recommended that a full-scale demonstration project be initiated, with a capacity in the 0.2 to 0.6 MGD range. The primary goals of this project would be to demonstrate the reliability, energy cost reduction improvement, and other operational benefits that can be achieved with both the VRO-IPER and VRO-DDE systems. Another goal would be to demonstrate to the desalting professionals, and users, that the technology is a viable alternative to the conventional methods that are now in use.
8. It is further recommended that desalting professionals recognize that the VARI-RO technology is a reliable method to reduce water desalination costs. These savings would be accomplished by optimizing SWRO facilities to improve water quality, reduce plant capital costs, and provide a substantial energy cost reduction.

3. VARI-RO SYSTEM FEATURES AND BENEFITS

This section discusses the functional, operational, and adaptive features of the VARI-RO technology. This covers two complementary versions:

VRO-IPER	VARI-RO Integrated Pumping and Energy Recovery version
VRO-DDE	VARI-RO Direct Drive Engine version

Revolutionary Approach: In recent years, hydraulic technology has revolutionized the construction, mining, and tunneling industries. The ruggedness, performance, and control features of hydraulics far surpasses methods that were previously being used. The unique use of hydraulic power and control technology in the VARI-RO system provides a similar capability to revolutionize the water desalination industry— by improving efficiency, effectiveness, emission reduction, and adaptability.

3.1 VARI-RO™ Integrated Pumping & Energy Recovery

3.1.1 VRO-IPER Overview

The VARI-RO Integrated Pumping & Energy Recovery (VRO-IPER) system (patents issued and pending) is highly efficient, and is adaptive to the variable conditions of seawater and brackish water reverse osmosis (SWRO & BWRO) desalination facilities.

This unique system utilizes modern hydraulic power transmission and electronic control to provide the functions listed below:

- Feed water pumping.
- Concentrate energy recovery.
- Variable flow and pressure for RO membrane optimization, startup, and shutdown.

Lower operating and capital costs are provided for the desalting facility, because of this unique approach used to incorporate these functions into a single system. The technology is suitable for low, medium, and high capacity applications over a wide range of pressures and recovery ratios. For SWRO, and high salinity brackish water, these ranges include:

- Capacity: 0.053 to 5.28 MGD (200 to 20,000 m^3/d).
- Pressure: 500 to 1500 PSI (34 to 100 BAR).
- Recovery ratio: 20 to 75%.
- Power: 25 to 2500 hp (19 to 1900 kw).

Some reasons for lower cost accomplishment are illustrated in the following statements:

The VRO-IPER System Is Integrated: – This unique approach integrates the pumping and energy functions, along with variable flow drive, support structures, and piping headers. The piping headers include: supply, feed pressure, concentrate pressure, and concentrate discharge.

This technology greatly simplifies installation in addition to saving energy. Plus, the design, procurement, and field installation of the conventional equipment items are not required.

The conventional equipment items not required would include some combination of the following:

1) centrifugal pumps, variable frequency drives, and throttle valves;

2) plunger pumps, pulsation dampeners, and speed reducers;

3) energy recovery turbines, booster pumps, sumps, and sump pumps;

4) interconnecting field piping, and special mounting foundations — for these equipment items.

The key features provided by the technology include:

- High efficiency feed water pumping.
- High energy transfer efficiency (energy recovery).
- Low specific energy consumption, which is flat versus recovery ratio.
- Adaptive to variable membrane pressure and flow conditions.
- Smooth and variable flow.
- Long operating life due to lower cycle speeds.
- Full backpressure capability for concentrate discharge (no sump pumps).
- Low suction head requirements.
- No special mounting foundations (install anywhere in the facility).
- Flexible physical arrangements to allow the system to be readily incorporated into existing facilities (retrofits), and/or new facilities.

Low Energy Cost: – Substantial electric power cost savings of 15 to 50% results from the low specific energy consumption of the VRO-IPER system, which is much lower than conventional methods presently being used. Depending on the electric power rates, and the capacity of the facility, the saving can amount to millions of dollars over the life of the facility.

High Efficiency Energy Transfer and Flat Energy Consumption versus Recovery Ratio: – More energy is recovered from the concentrate (brine) than with conventional methods, because of the direct force transfer to the feedwater. This high energy transfer efficiency provides the capability to save additional energy by operating at lower pressures, use fewer membrane elements, have improved membrane element reliability, and produce cleaner water (Childs and Dabiri 1995 page 25, and 1998 page 33). This feature results in efficient operation at lower recovery ratios, because it provides flat specific energy consumption versus recovery ratio, as compared to conventional methods.

Long Operating Life, Smooth Flow Rates, and No Special Mounting Foundations: – Greatly increased operating life is provided because of the low cycle speed. For example, at a cycle speed of 15 CPM it would take 20 years to equal the same number of cycles that a 300 RPM plunger pump would get in one year. In addition, because of the smooth flow capability, no suction stabilizers and pulsation dampeners are required. Further, no special mounting foundations are needed, since the system has very low accelerations. It can be mounted anywhere in the facility.

By comparison, plunger pumps often require that special mounting foundations be designed into the facility to withstand high acceleration and vibration forces that can occur during operation. Even high capacity multi-stage centrifugal pumps and energy recovery turbines need special foundations to withstand the unbalanced load potential. These special foundations result in additional engineering and capital cost for the facility that are not required for the VARI-RO system.

Adaptive Pressure and Flow Capability: – The system saves additional energy by automatically adapting to variations in membrane pressures, because it is positive displacement. In addition, the system incorporates the adaptive capability to adjust the flow rate to optimize the facility operation. This allows it to pump at the lowest possible pressure throughout the life of the membrane elements. It is well known that in RO desalination facilities, the membrane pressures vary due to fouling, temperature, and salinity changes.

For example, a centrifugal pump must be carefully selected for the maximum anticipated membrane pressure. This means that for the lower start-up pressures,

some method must be used to compensate for the higher pressure output of the pump. The most common method is to use variable frequency drives (VFD) to adjust the pump speed, or in some cases membrane elements are switched in or out with valving.

In addition, the suction head required by the VARI-RO system is quite low due to the low piston accelerations and smooth flow. This allows the pressure output from the pretreatment system to be low as compared to conventional pumping systems.

Further, no sump pumps are needed to discharge the concentrate, because the system can take any backpressure up to the pressure ratings of the equipment. For comparison, Pelton wheel (PW) energy recovery turbines must discharge to atmospheric pressure, generally requiring sumps and sump pumps to return the concentrate back to the ocean or other disposal point.

3.1.2 VRO-IPER System Description

The sub-assemblies of the VARI-RO Integrated Pumping and Energy Recovery (VRO-IPER) system are listed below.

SUB-ASSEMBLY	CONSISTING OF:
ELECTRONIC CONTROL UNIT (ECU)	Computer Servo Controller Instrumentation
HYDRAULIC DRIVE UNIT (HDU)	Electric Motor (EM) Hydraulic Pumps (HP) Hydraulic Accessories
WATER DISPLACEMENT UNIT (WDU)	Hydraulic Cylinders (HC) Water Cylinders (WC) Feed Water Valves (FWV) Energy Recovery Valves (ERV)

A block diagram of the VRO-IPER system is shown in **FIGURE 3-1**. This figure also shows the relationship to the other systems in a reverse osmosis desalting facility. The other systems include the electric power supply system, the feed water supply and treatment system, and the reverse osmosis membrane bank system.

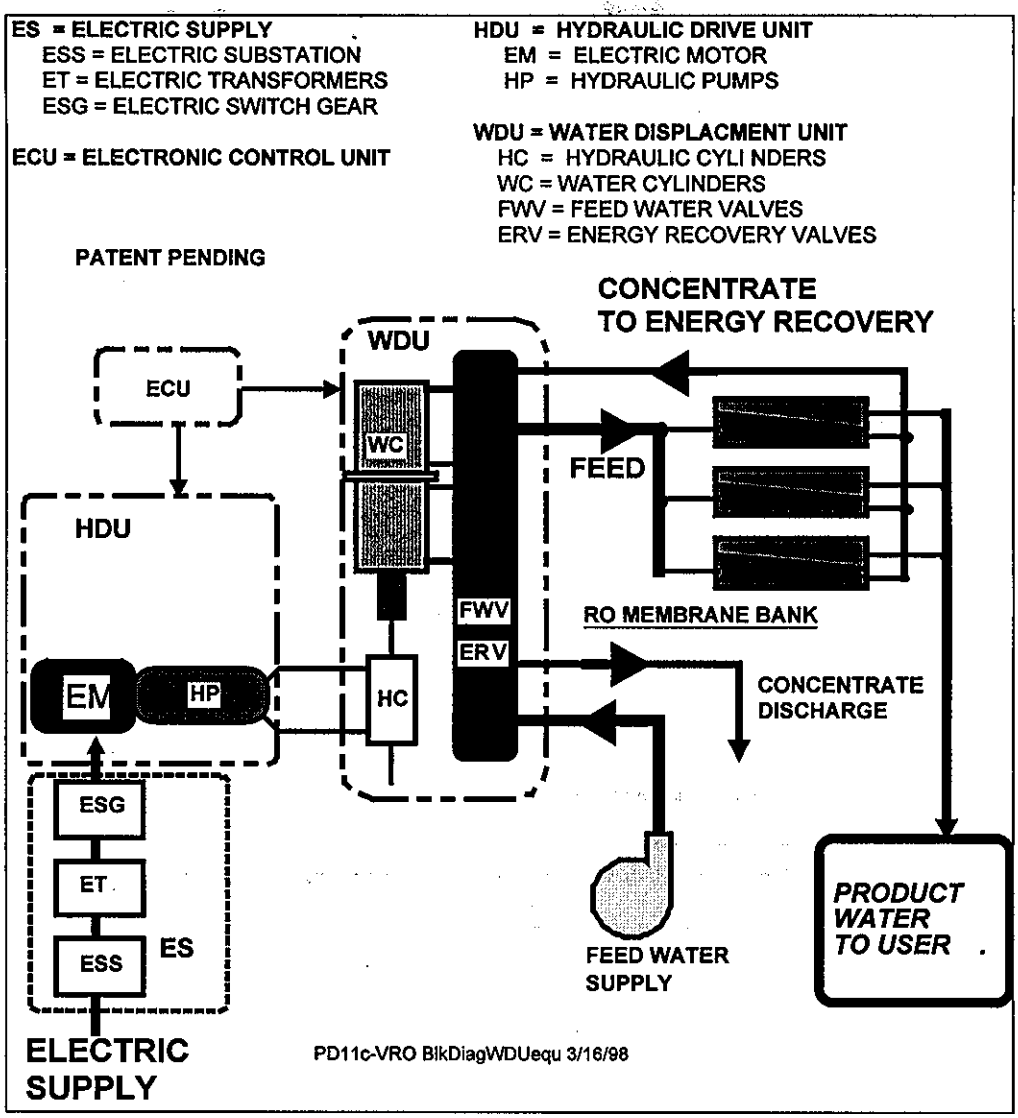

FIGURE 3-1 VRO-IPER System Block Diagram

3.2 VARI-RO Direct Drive Engine

3.2.1 VRO-DDE Overview

The VARI-RO Direct Drive engine (VRO-DDE) system is a highly efficient, positive displacement, external combustion, heat engine. This engine will also provide low emissions as compared to conventional internal combustion diesel or natural gas engines. This is accomplished by using clean burning continuous combustion, as compared to the intermittent combustion of internal combustion engines. In addition, this engine system can use renewable thermal energy sources, such as solar and geothermal.

This unique system utilizes modern hydraulic power transmission and electronic control to provide the functions listed below:

- Direct acting reciprocating power output for the VRO-IPER system (see **SECTION 3-1**).
- Variable stroking speed and force for pumping optimization, startup, and shutdown.

Lower operating cost is provided for the desalting facility with this technology, because of the capability to directly use thermal energy sources, rather than first converting the energy source into electricity. Because it is positive displacement, the technology will be capable of delivering high-efficiency, low-emission power to the pumping system over a wide range of operating conditions. The VRO-DDE system can be designed to match the stroking and power requirements for the VRO-IPER.

Some reasons for this lower cost accomplishment are illustrated in the following statements:

The VARI-RO DDE System Is Integrated: – This unique approach integrates an efficient and low emissions power source to directly drive the desalting pumping systems, as previously mentioned. This cuts out many of the "middle-man" energy conversion losses of the conventional approach. This is covered in more detail in **SECTION 3.2.4**.

In regions where there is a shortage of electric power supplies, or the cost is high, this capability can be particularly important.

Low Energy Cost and Low Emissions: – Lower energy cost is accomplished by using lower cost fuel sources, and using this fuel more efficiently than with conventional methods presently being used that require electric power. Depending on the electric power rates, and the capacity of the facility, the savings can amount to millions of dollars over the life of the facility.

The emissions will be low as compared to conventional engines because of the continuous burn feature, and relatively low operating temperatures, as compared to internal combustion engines and gas turbines.

Long Operating Life, and No Special Mounting Foundations: – Greatly increased operating life is provided because of the low cycle speed. For example, at a cycle speed of 15 CPM it would take 100 years to equal the same number of cycles that a 1500 RPM Diesel engine would get in one year. Further, no special mounting foundations are needed, since the system has very low accelerations.

By comparison, Diesel engines often require that special mounting foundations be designed into the facility to withstand high acceleration and vibration forces that occur during operation.

Adaptive Force and Speed Capability: – The system saves additional energy by automatically adapting to the variations in force and velocity requirements of the pumping system. This allows it to drive the pump at the lowest possible force and velocity output, which equates to the power output of the engine system.

Further, the force and velocity profile can be automatically adjusted to suit the application by means of the computer control.

Adaptive Energy Source Utilization: – The system is uniquely suited for cleanly and efficiently using a variety of thermal energy sources. The burner can be set up for clean burning hydrogen, natural gas, diesel fuel, fuel oil, landfill gas, and even coal. Further, renewable energy sources such as solar and/or geothermal energy can be used directly, or augmented by other energy sources. For example, it would be feasible to use a low grade thermal source as the pre-heater, such as geothermal; and then boost the temperature, with say solar or natural gas, to get more efficient overall energy conversion (higher thermal cycle efficiency at lower operating temperatures).

3.2.2 Lower Emissions and Energy Source Variety

The VRO-DDE system uses a modified Brayton cycle, which is positive displacement as opposed to the normally used turbine equipment. The Brayton cycle is the same thermodynamic cycle used with gas turbines. Gas turbines are considered external combustion engines and are well known in the industry as having low emissions as compared to internal combustion engines.

However, gas turbines must be of high capacity, and used for applications that operate at nearly constant load and speed, in order to achieve reasonable efficiencies. For electric power generation, gas turbines are often used in combined cycle with conventional steam electric power generation, in order to achieve high overall plant efficiency.

The VRO-DDE engine system, on the other hand, is positive displacement and variable cycle speed. This unique design configuration will allow it to be used for both low and high capacity applications, and to operate efficiently over a wide range of operating conditions.

In addition, the technology is well adapted to use the latest "low NOx" combustor technologies to improve efficiency and reduce emissions as compared to conventional engines, and even conventional electric power generation facilities that are now in use. The externally applied thermal energy allows the clean burning of a wide variety of energy sources, including: natural gas, digester gas from wastewater treatment facilities, diesel fuel, hydrogen, and even coal. The combustion process can be carefully controlled to minimize emissions, such as CO, NOx, and particulates. The efficient operation will also reduce CO_2 emissions, one of the greenhouse gases, as compared to conventional desalination methods, including both distillation and reverse osmosis. The following statement summarizes the technology:

The VARI-RO Direct Drive Engine (VRO-DDE) system combines the benefits of continuous combustion technology (similar to gas turbines) with the benefits of positive displacement (similar to diesel engines), plus adds variable stroke capability (computer and hydraulic control); resulting in a thermal energy conversion system which can:

1) have low emissions (zero as a heat recovery or hydrogen burning engine),

2) be highly efficient, and

3) perform effectively over a wide range of operating conditions.

Further, the system can be used with renewable energy sources, such as solar thermal energy and geothermal.

3.2.3 *Benefits of the Direct Drive Engine System*

The benefits of the VARI-RO Direct Drive engine technology are summarized in the following table:

FEATURE	BENEFIT
• Positive Displacement	• High efficiency over a wide operating range.
• External Combustion, combined with the latest combustion technology	• Lower emissions as compared to internal combustion engines, and the potential to be lower than present-day electric power plants.
• Low Cycle Speed	• Increased life of working parts, as compared to other positive displacement engines.
• Variable Cycle Speed	• Variable speed or variable power, which provides for excellent load matching capability.
• Proven Components	• Most of the critical components have been proven in other applications.

The benefits of the VARI-RO Direct Drive Engine system complement the benefits of the VARI-RO Integrated Pumping and Energy Recovery system.

3.2.4 *Improved Fuel-To-Water Efficiency*

FIGURE 3-2 shows simplified diagrams of two desalination systems using the reverse osmosis (RO) process. One system is a conventional system using a centrifugal pump, Pelton wheel energy recovery turbine, variable frequency drive, and sump pump (CP-PW-VFD-SP) pumping and energy recovery system. The other system is the VARI-RO Direct Drive Engine (VRO-DDE) system, which is powering the VRO-IPER system.

For the conventional system, the fuel is burned in a combustor to drive steam turbines to generate electric power at high voltage. Transmission lines carry the electric power to the sub-station and voltage transformers at the desalination plant. The variable frequency drive (VFD) provides power to the electric motor to drive the centrifugal feed pump for the RO system. The energy recovery turbine provides an energy assist to reduce the power requirements of the electric motor. The VFD is used to adjust the output of the centrifugal pump for system startup; and for membrane pressure variations due to feed temperature changes, salinity changes, and membrane fouling. The overall fuel-to-water efficiency of the conventional system is relatively low, when considering all of the intermediate "middleman" losses.

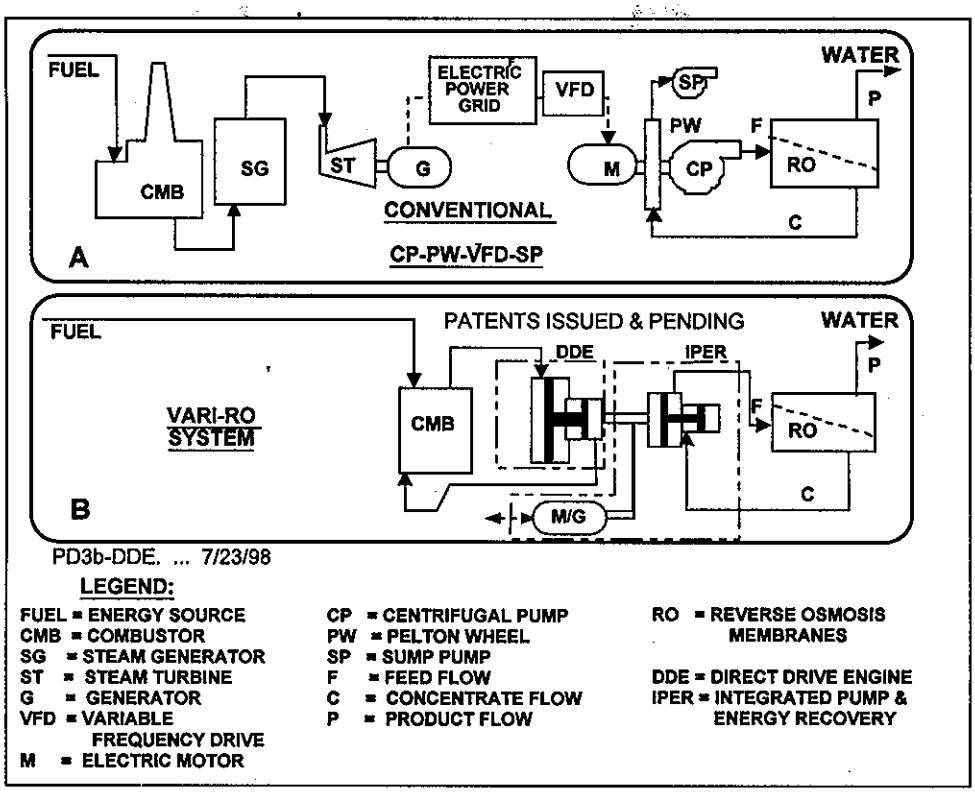

FIGURE 3-2 Fuel-To-Water Efficiency Improvement with VARI-RO Systems

For the VRO-DDE system, the fuel is burned in a combustor at the desalination facility to directly drive the pumping pistons for the variable flow, positive displacement pumping and energy recovery system. Because it is positive displacement, it automatically compensates for membrane pressure changes. In addition, because it is variable flow, it can adjust the flow for startup and optimization of membrane performance. The overall fuel-to-water efficiency of the VRO-DDE system is relatively high, when considering all of the intermediate "middleman" losses that are saved with the Direct Drive Engine method as compared to the conventional method. In addition, the VRO-IPER system is also more efficient than a system using centrifugal pumps and Pelton wheel energy recovery turbines.

In summary, the VRO-DDE system offers the potential to significantly reduce the energy consumption, and cost, to desalinate water as compared to conventional methods.

3.2.5 VRO-DDE System Description.

The VARI-RO Direct Drive Engine (VRO-DDE) system consists of a highly efficient, positive displacement, external combustion, thermal energy engine system using the closed loop, recuperated Brayton cycle. This engine system drives a highly efficient pumping and energy recovery system for pumping feed water to reverse osmosis membranes, and recovering energy from the reject concentrate.

The VRO-DDE system consists of the sub-systems, noted below. These subsystems are integrated with the pumping and energy recovery sub-systems of the previously tested VRO-IPER system shown in **FIGURE 3-1**.

SUB-ASSEMBLY	CONSISTING OF:
HEAT EXCHANGE UNIT (HEU)	Combustor (CMB) Heat Source Exchanger (HSE)

	Recuperator (RC)
	Cooler (CL)
GAS DISPLACEMENT UNIT (GDU)	Expander Cylinders (EC)
	Compressor Cylinders (CC)
	Expander Valves (EV)
	Compressor Valves (CV)

This results in an integrated pumping and engine system, which offers the potential to reduce the total water cost of reverse osmosis (RO) desalted water.

The block diagram in **FIGURE 3-3** shows how the sub-assemblies of the VRO-DDE system are integrated with the sub-assemblies of the VRO-IPER system.

The VRO-DDE system is very similar to the VRO-IPER electric motor powered system, except for some key differences. The major difference is that most of the energy input is from the VRO-DDE, rather than the electric motor. In the case of the VRO-DDE system the electric motor function is for system start-up, and to provide a power smoothing effect during the piston stroking. In this case, the electric motor provides a function similar to the flywheel in conventional crank type engines.

The power input into the VRO-IPER system is from reciprocating direct drive shafts, which are connected to the VRO-DDE cylinders in the gas displacement unit (GDU), as shown in **FIGURE 3-3**.

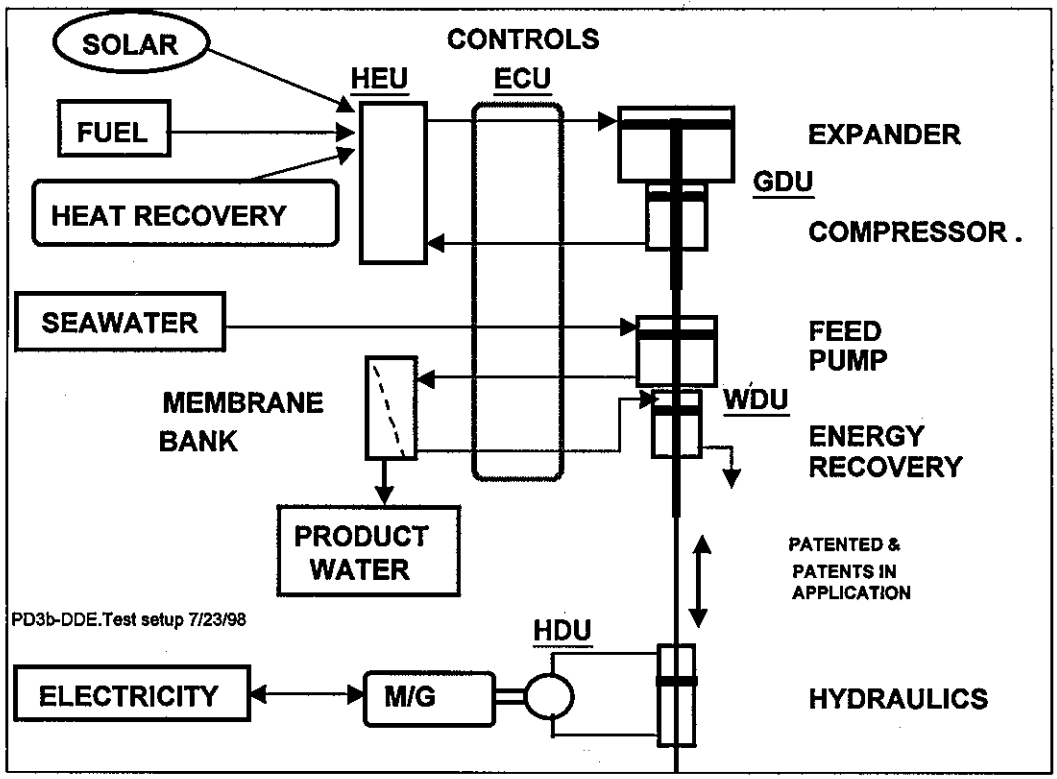

FIGURE 3-3 VARI-RO Direct Drive Engine System Block Diagram

3.3 Improved Water Production vs. Energy Consumption

Currently there are various systems for seawater desalination, which include: multi-stage flash (MSF), multi-effect distillation (MED), and reverse osmosis (RO). Many of the present facilities (some over 20 years old) use the MSF process, and are located in Middle East countries. To reduce the energy consumption for distillation, the vertical tube evaporator MED (VTE-MED) has been proposed to improve the performance ratio. In recent years, however, the use of the RO process has been growing, primarily due to its lower energy consumption. In addition, RO popularity is increasing due to its easier implementation.

One way to evaluate the various desalination methods is to determine how much water can be produced from a given quantity of thermal power, as shown in **FIGURE 3-4**. The calculations for this figure are given in **FIGURE 3-5**. For this illustration, it has been assumed that the equivalent of one megawatt of thermal power is available (1 MWt). This thermal power could be from natural gas, oil, or even solar power. From this quantity of thermal power, the approximate quantity of water that can be produced was calculated, for the following cases (with the input thermal energy and electric power requirements as noted):

CASE 1: Multi-Stage Flash (PR = 13) Desalting Method [base]
Thermal Energy = 828 kBTU/kgal + Electric Power = 12 kwh/kgal

CASE 2: Multi-Effect Distillation (PR = 23) Desalting Method
Thermal Energy = 468 kBTU/kgal + Electric Power = 7 kwh/kgal

CASE 3: Conventional Reverse Osmosis Centrifugal Pump Desalting Method
Centrifugal Pump, Pelton Wheel turbine, Variable Frequency Drive, with Sump Pumping (CP-PW-VFD-SP). High Pressure Pumping = 12.72 kwh/kgal + Ancillary = 4.5 kwh/kgal

CASE 4: VARI-RO Integrated Pumping and Energy Recovery Desalting Method
High Pressure Pumping = 8.27 kwh/kgal + Ancillary = 4 kwh/kgal

CASE 5: VARI-RO Direct Drive Engine Desalting Method
High Pressure Pumping = 7.86 kwh/kgal + Ancillary = 4 kwh/kgal

NOTE: In CASE 5 the 7.86 kwh/kgal equivalent is supplied by the engine.

Source References: Cases 1 & 2, (Boyle, 1991) and (MWD, 1993); Cases 3, 4, & 5 (Childs and Dabiri, 1998). The energy consumption values shown for these cases have been converted, and extrapolated from these sources to provide a basis for relative water production from a given energy source. For Cases 3, 4, and 5 the ancillary power was reduced from 5.64 kwh/kgal to 4.5 kwh/kgal for the Pelton wheel case (with sump pumping) and 4 kwh/kgal for the VARI-RO cases (without sump pumping). The rationale is that the ancillary power can be reduced with careful design. The VARI-RO system features provide for easier facility optimization.

There may be variations from actual performance at any given facility.

As shown on **FIGURE 3-4**, the water production from the conventional RO method (CASE 3) is about 5 times the [base] MSF method — for the same thermal energy input.

By comparison, the water produced from the VRO-IPER (CASE 4) and VRO-DDE (CASE 5) methods is about 7 and 9 times the [base], respectively.

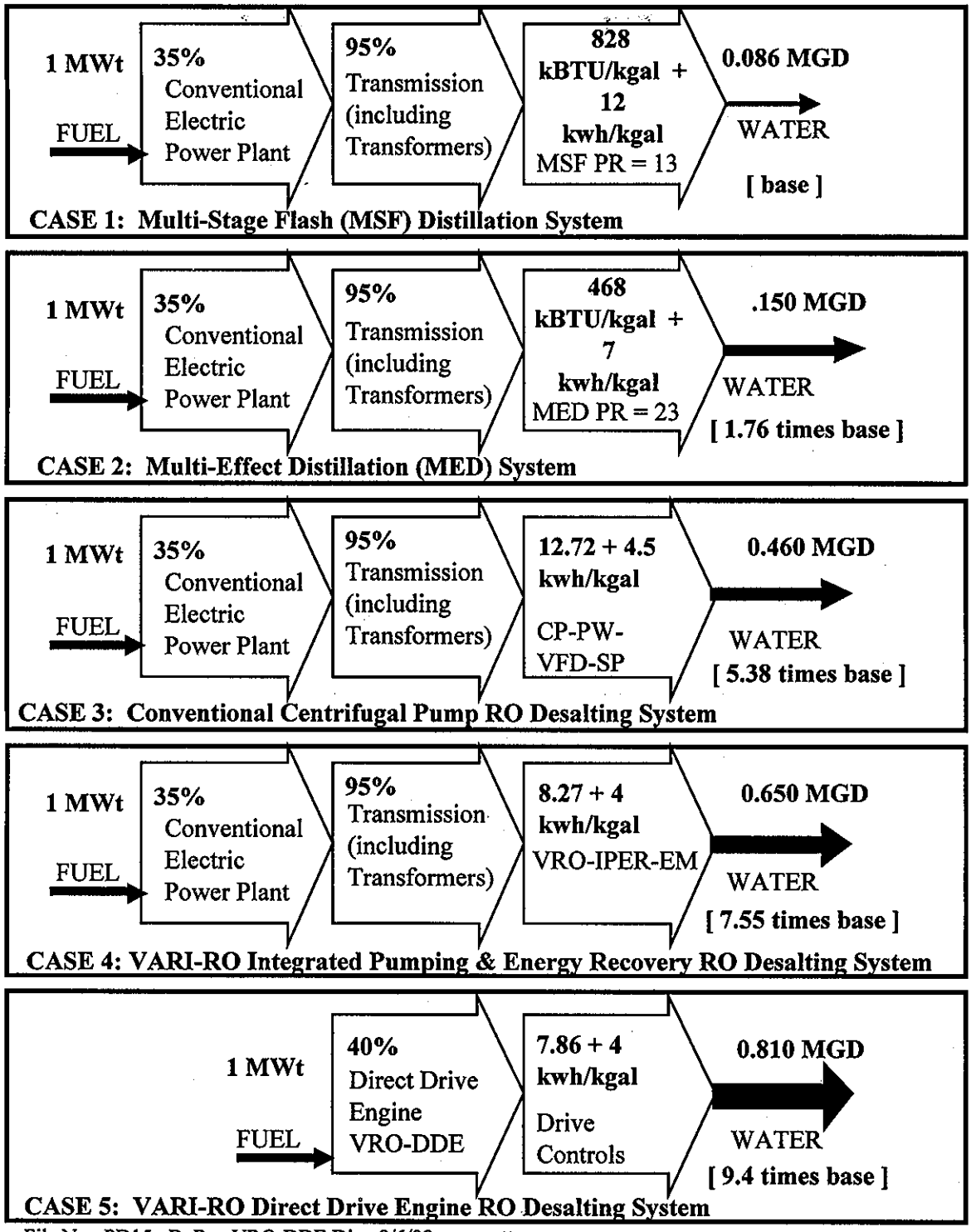

File No. PD15a-BuRec VRO-DDE Diag 8/6/98 File No. EX15a-BuRec VRO-DDE Calc.8/6/98

FIGURE 3-4 Improved Water Production from a Given Power Source

CASE	Total Input Specific Power kwht/kgal	EFFICIENCIES		Thermal Energy Required kBTU/kgal	SEC of Plant Ancillary kwhe/kgal	SEC of RO Pump & ER System kwhe/kgal	Product Water Produced MGD	Multiple of Water Produced
1 MSF PR = 13	279	Power Plant 35%	Transmission 95%	828	12.00		0.086	BASE
2 MED PR = 23	158	Power Plant 35%	Transmission 95%	468	7.00		0.152	1.76
3 CP-PW-VFD-SP	52	Power Plant 35%	Transmission 95%		4.50	12.72	0.463	5.38
4 VRO-EMD	37	Power Plant 35%	Transmission 95%		4.00	8.27	0.650	7.55
5 VRO-DDE	30	Engine for VRO-DDE 40%			4.00	VRO-Pump & ER 7.86	0.809	9.40

File No. EX15a-BuRec VRO-DDE Calc.8/6/98

NOTES: Water production based on: 1.00 MWt input power
Transmission includes transformers

FIGURE 3-5 Improved Water Production Calculations

3.4 VARI-RO System Commercialization Benefits

The improved water production capability, per unit of energy input, was illustrated in **FIGURE 3-4**. This shows that the VRO-DDE method has the potential of producing over nine (9) times the water from a given energy source — as compared to a facility using the MSF PR = 13 distillation method.

Currently, a major portion of the world's seawater desalination is accomplished with the energy intensive MSF process. As desalination plants are modernized, the conversion to the VRO-DDE method, would save a substantial quantity of the world's energy supply, and at the same time reduce CO_2 emissions — which are suspected of contributing to global warming.

In addition to the Middle East countries, there are major seawater desalting facilities in other locations around the world, including Spain, Canary Islands, Malta, Okinawa, and the Caribbean. Many of the desalting facilities at these locations use the RO process. The potential applications for the VARI-RO™ technology (both the VRO-IPER and the VRO-DDE systems) include:

1) the replacement of existing distillation facilities that have excessive energy consumption and emissions (or are at the end of their useful life);

2) the retrofitting of existing RO facilities with more efficient pumping systems; and

3) providing improved technology for new RO desalting facilities. The VRO-DDE technology will be especially beneficial in regions with high electric power rates or energy shortages.

The sale of this technology on a worldwide basis would help to meet the Bureau of Reclamation Desalination Research & Development (DesalR&D) Program objectives, as follows:

- Help United States industry compete in major international markets for desalting systems, by fostering the development and use of new cost-effective and technologically advanced desalting processes.
- Promote partnerships between government and industry in the use of desalting to meet critical water needs.
- Promote technologies that are more energy efficient and environmentally attractive than existing methods.

The VARI-RO technology developments can also help to meet a key objective of the global warming treaty, which is to reduce CO_2 emissions by a substantial amount by the year 2010.

3.5 VARI-RO System Operating Versatility

The technology is applicable to any desalination requirement, including brackish water and seawater. It is also applicable to other applications, such as general pumping and gas compression. An example of general pumping would be the pumping of the product water to a higher elevation for distribution. The technology can, however, provide the greatest savings for seawater desalination; which was the focus of this pilot plant project.

3.5.1 Unique DUAL-USE Capability

The VARI-RO technology (both the VRO-IPER and the VRO-DDE versions) can be applied in several ways. One way would be to start off with the IPER version for the facility, and design the installation for the future addition of the DDE version. This would provide electric power cost savings for the initial plant start-up with a technology that has been proven with the testing program. The decision to implement the DDE version could then be based on increased cost of electric power, shortage of available electric power, and the general desire to lower the operating cost of the facility.

After the implementation of the DDE version, the DUAL-USE plant can be operated from fuel, or from electric power, during lower cost off-peak rates. In addition, the facility could be used to generate electric power, when there was not a need for water. In this case, the RO pumping would be bypassed; and the electric motors would be driven as induction generators.

This DUAL-USE capability would add to the cost effectiveness of a desalting facility that was put in place for water supply diversification and drought-proofing. The facility could provide useful electric power when adequate water supply is available from traditional sources.

3.5.2 STAND-ALONE Capability

When the Direct Drive Engine technology has sufficiently matured in its design development, then the facility can be designed to implement the technology without first going with the VRO-IPER version. The benefit here would be that the capital cost of a major electrical sub-station, and the associated power equipment, would be saved.

This STAND-ALONE implementation scenario would be particularly applicable for locations that are away from traditional power grids, and where electric power rates are high. This would save the cost of the electric power transmission lines, and/or the additional electric power generating capacity that would be necessary with an electric powered desalting system. It would also be applicable for solar power applications, where the thermal energy is obtained by focusing the sun's rays on a high temperature receiver, which becomes the heat source exchanger.

4. PILOT PLANT PARAMETERS AND CONFIGURATION

The design for a VARI-RO Pilot Plant included the selection of the most suitable configuration, plus the selection of equipment sizes for the selected capacity and RR. It also included the selection of the key system components and electronic control.

4.1 Pilot Plant System General Parameter Selection

WATER CAPACITY SELECTION: The water capacity selected was the same as previously tested (Childs & Dabiri, 1998). This unit has a design capacity of 49,000 GPD (185 m^3/d) and 43% recovery ratio, with a cycle speed of 13.7 CPM. The design pressure range of this unit is 400 PSI (28 BAR) to 1000 PSI (69 BAR).

ENGINE DESIGN PARAMETERS: The purpose of this test system is proof-of-concept. The design parameters selected for this unit were 4 horsepower output to the water cylinders, 850°F (454°C) inlet temperature, 600 PSI (41 BAR), with a cycle speed of 13.7 CPM.

BENCH MARK TEST PARAMETERS: It was decided to do all of the initial testing at a water pressure of 500 PSI (35 BAR) and 12 CPM. This pressure was selected because it would lower the operating power during engine operation.

4.2 System Test Configuration

The test system schematic is shown in **FIGURE 4-1**, and a photograph of the water displacement unit is shown in **FIGURE 4-2**. The key sub-assemblies are as follows:

Water Displacement Unit (WDU) -- The WDU from the original system test (Childs & Dabiri, 1998) was rearranged to place the hydraulic cylinders above the water cylinders. This allowed the engine cylinders to be connected to the tail rod of the hydraulic cylinder.

Hydraulic Drive Unit (WDU) -- The HDU is the same unit used with the original test system.

Electronic Control Unit (ECU) -- The ECU provides several functions. The primary function is to control the HDU to provide power in a prescribed way to the WDU for cylinder stroking and energy recovery valve operation. The other functions include control of the expander valves, diagnostics, data acquisition, data analysis, and reporting. The ECU for this test is similar to the original test system, except that it needed to be expanded and revised to include the engine system. This included the addition of the engine controls and instrumentation, plus the revision of analysis and reporting programming.

Gas Displacement Unit (GDU) -- The GDU was designed and built new for this test. It consists of the expander cylinders, expander valves, compressor cylinders, and compressor valves. These were sized to provide the desired force input into the hydraulic cylinders.

Electric Heater -- The engine system requires thermal energy input, which is then converted to mechanical power. In full-scale applications, the burning of fuel, heat recovery, solar, or other suitable thermal energy source would provide this thermal energy. However, for the test system, an electric heater supplied the thermal energy input. This was selected because it would be easier to implement, and easier to measure the power input.

Power Meters -- The power meters measure the input electrical power into the HDU and the electric heater.

Water Test System -- The water test system consists of a water storage tank, a centrifugal pump to supply water to the WDU, and the return lines from the WDU.

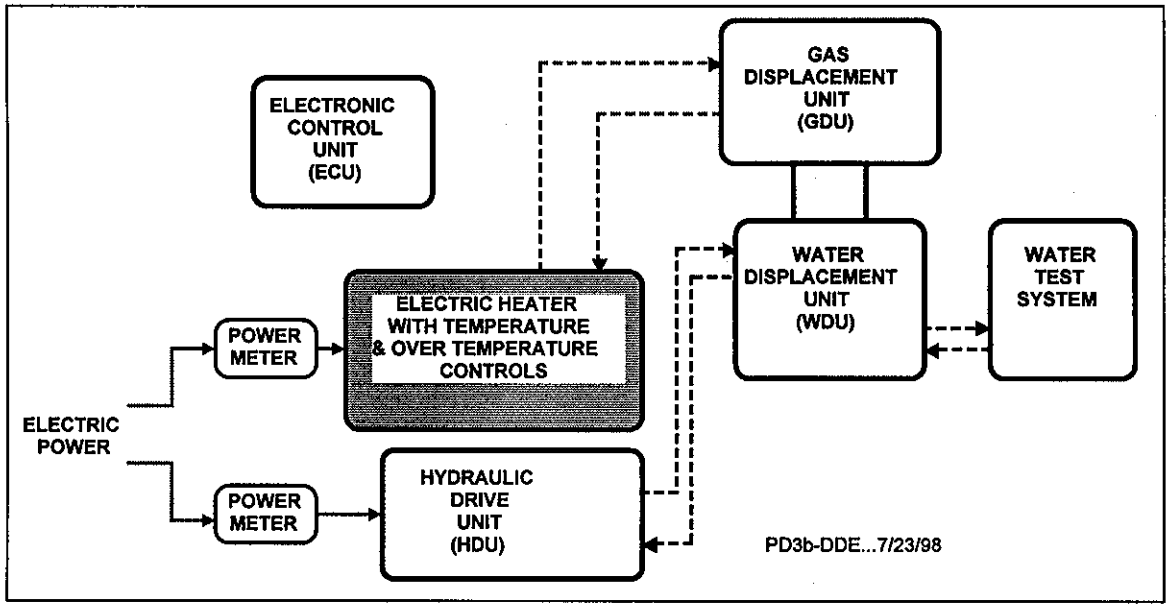

FIGURE 4-1 Test System Block Diagram

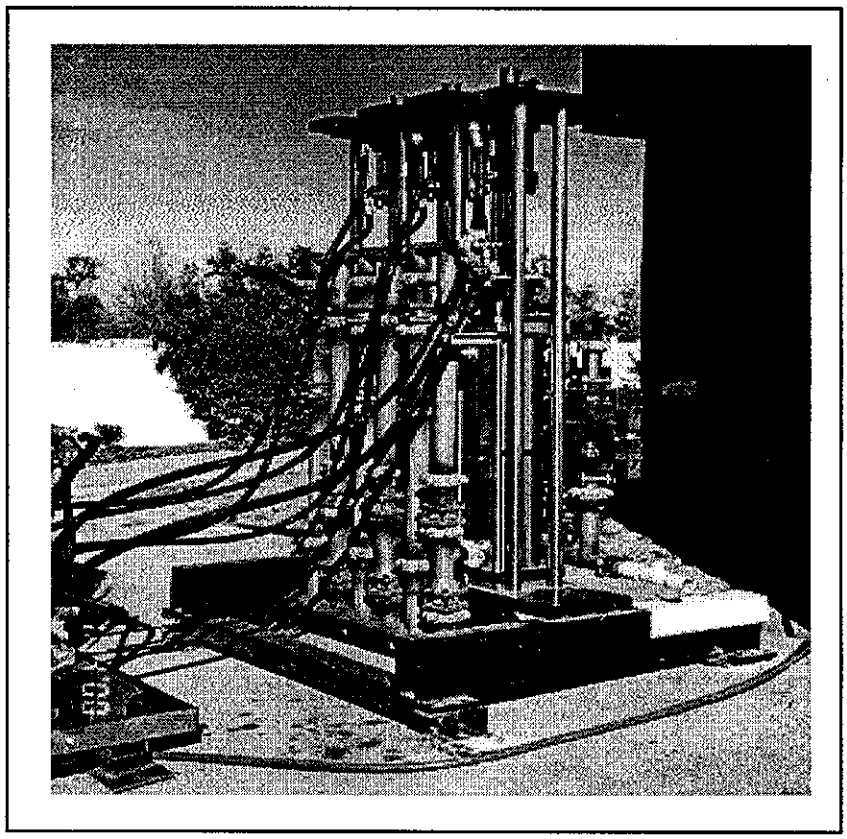

FIGURE 4-2 Test System Water Displacement Unit

5. TESTING PROGRAM

The testing was performed at American Tool & Engineering Corporation's facility, San Diego, California.

5.1 Test Setup and Methodology

The VARI-RO system testing was performed under simulated conditions as shown previously in **FIGURE 4-1**. Fresh water was used as the testing medium for convenience, and to conserve project cost. Testing with fresh water provides the same results as testing with seawater, since the primary objectives were to show proof of function. Testing with seawater is only important for long duration testing to determine corrosion effects, which is planned for a subsequent testing program.

First the system was operated as a VARI-RO integrated pumping and energy recovery system (VRO-IPER) to check out the general function of the system with the modified water displacement unit (WDU) and the electronic control unit (ECU).

After checking out the water system, the engine system was connected and operated. The engine system included the gas displacement unit (GDU) and the electric heater.

5.2 Electronic Control, Diagnostics, Data Acquisition, and Analysis

The Electronic Control Unit consists of: computer, display screen, servo controller, transducers, and printer for data recording. The computer software capability includes: calculations for cylinder stroking from the hydraulic pumps, data acquisition, and data analysis. The transducers for control and instrumentation include the following:

TRANSDUCERS AND MEASUREMENT METHODS	USED FOR THE FOLLOWING FUNCTIONS
Cylinder Position (3)	Position feedback to Servo Controller Position versus cycle period Velocity versus cycle period Cylinder displaced flow rate for volumetric efficiency calculation.
Membrane Pressure (1)	Feed pressure versus cycle period Water Displacement Unit efficiency calculation

Hydraulic Pressure (2)	Hydraulic cylinder pressure versus cycle period Differential cylinder pressure Hydraulic cylinder force calculation Mechanical efficiency Power input to the WDU.
Engine Pressure (2)	Compressor pressure rise during stroking Expander inlet pressure Expander pressure at the cut-off point Expander pressure decay during expansion
Differential Pressure (1)	Pressure drop measurements, such as membrane simulation, and energy recovery valves.
Power	Visual power meter Recording of power input Specific energy consumption calculations
Product Flow Measurement (tank, scale, and stop watch)	Recording of product flow rate, which is manually input into the computer. Volumetric efficiency calculations Specific energy consumption calculations
Engine Temperature	Header temperatures into (T1) and out of (T2) the compressor cylinder assembly, and into (T3) and out of (T4) the expander cylinder assembly.

The computer control, diagnostics, data acquisition, and data analysis system developed for the Pilot Plant unit testing is quite sophisticated. A wide variety of operating parameters (individually or together) can be dynamically displayed on the computer screen for each cycle period, or for multiple periods. This allows the operator to look for variations from one cycle, or test run, to the next for diagnostic purposes. In addition, certain parameters are displayed on the screen in engineering units for monitoring of performance. The dynamic data, and the engineering unit data, can be recorded for subsequent analysis after the test runs have been completed.

The extensive data analysis and recording, that is provided in the computer software, provides the operator information for monitoring the performance of the unit, and the capability to trouble shoot malfunctions.

5.3 Functional Results

The Pilot Plant testing of the VARI-RO system has demonstrated the following functional features for startup, shutdown, optimization, and diagnostics:

1. UNLOADED ELECTRIC MOTOR STARTUP: The ability to start the electric motors unloaded and under low inertia was demonstrated. This feature avoids high surge electrical currents for long time periods that can occur with conventional pumping methods. This can become an important feature for high capacity facilities that can minimize the electrical power supply requirements.
2. PRE-PUMPING CHECKOUT: If desired, the operation of the various sub-systems can be checked out before starting of the main pumping operation. For example, all of the energy recovery valves (ERV) and the expander valves (EV) can be set to the "OPEN" position, and the cylinders stroked under low supply pressure. This function is useful for assuring that the air has been bled from the system. In addition, each ERV and EV can be individually operated to check for function, and trouble shooting.
3. LOW CYCLE SPEED STARTUP: For the Pilot Plant unit, the typical startup cycle speed was 3 CPM, with the cylinders moving from the "HOME" position to the normal cycling position. After checking that everything was functioning properly, the cycle speed was gradually increased to normal cycle speed, usually 12 CPM; which brought the flow up to normal conditions. Other startup cycle conditions can be readily setup to optimize the facility operation.
4. VARIABLE CYCLE SPEED: By varying the cycle speed, the output flow is also varied. This is an important feature for optimization of the desalting operation.
5. NORMAL OPERATION MONITORING: By watching the computer display screen, the various operating parameters can be monitored by the operator. The various parameters can be turned on and off, and the screen refreshed to check out individual functions and/or parameters. This capability is particularly important for equipment diagnostics.
6. PARAMETER MONITORING: At the end of each cycle, the recorded data is updated and displayed, for example every 5 seconds at 12 CPM. During the system operation, the operator can note deviations of a particular parameter from normal operation. This can provide advanced notice of the possible need for system maintenance.
7. ENERGY RECOVERY VALVES SHIFTING AT ZERO FLOW: A key feature of the VARI-RO system is the high efficiency energy recovery. To accomplish this high efficiency, the energy recovery valves (ERV) switch the total flow between the three water cylinders in a complementary fashion. The unique control method provides that the flow to each ERV is brought to zero before it is closed or opened. This eliminates hydraulic shock, and this feature will be particularly important for future high capacity systems. However, while the flow through any individual valve goes from zero to maximum in a gradual manner, the total flow from the VARI-RO system is constant and with low pulsation, due to the unique complementary operation.
8. CONTROLLED SHUTDOWN: Upon receiving the signal to shutdown, the cylinders sequentially go the "HOME" position and stop. This provides for slow deceleration of the flow during shutdown, and avoids the mechanical shock that can occur with conventional systems. This also is an important feature for high capacity systems that have long intake and discharge piping systems.
9. COMPRESSOR & EXPANDER CHECKOUT: By selecting certain expander valves it is possible to checkout the compressor cylinder and valve operation, and the expander cylinder and valve operation.
10. ENGINE PREHEAT: By opening certain expander valves it is possible to

circulate working fluid through the system for preheating, or other checkout, before going into full operation.

In summary, the Pilot Plant testing has demonstrated the unique features of the VARI-RO system that makes this variable flow, positive displacement system suitable for high capacity desalting applications.

5.4 Operating at "Bench Mark" Conditions

A series of tests of the water pumping unit the were run at the "Bench Mark" operating conditions as described in **SECTION 4-1**, at 500 PSI and 12 CPM.

CALIBRATION CHECKS

For these series of tests, the pressure transducers were calibrated against a master pressure gage. The product and concentrate flow rates were determined using a tank, weigh scale, and stop watch.

The input electrical power was measured using a power meter (LOAD UPC) that is incorporated into the hydraulic drive unit (HDU), which is connected electrically to the ECU computer. The LOAD UPC power meter was calibrated to a setting provided by the manufacturer. In addition, a further calibration of the power meter was conducted during the original system test.

FUNCTIONAL OPERATION

The following was demonstrated during the functional operation of the combined VARI-RO Integrated Pumping and Energy Recovery (VRO-IPER) and Direct Drive Engine (VRO-DDE) system.

1. The operation of the re-arranged VRO-IPER system was similar to the original test system.
2. Electronic control unit (ECU) capabilities to control the combined VRO-IPER and VRO-DDE system.
3. ECU capabilities to allow adjustment for various operating conditions of stroke, velocity, engine valve cut-off points, and other operational parameters.
4. ECU capabilities to monitor operation and measure various parameters.
5. ECU capability to analyze results, to record displays of system operation for further review off-line, and to print reports.
6. Engine compressor cylinders and valves function and operation.
7. Heater function and operation.
8. Engine expander cylinders and valves function and operation.
9. Overall functional operation of the complete VRO-IPER and VRO-DDE system.

In summary, all of the functional aspects of the combined system were accomplished during the test program. Substantial engineering and operational knowledge was gained during the setting up for, and conducting of, the functional test program. This knowledge will be extremely useful for future demonstration and full-scale systems.

6. FULL-SCALE CONFIGURATION

A primary purpose of the pilot plant test program is to determine the feasibility of the technology for full-scale operation. This feasibility includes the determination of configurations that are practical, determination of operational characteristics and benefits, and projection of performance. This feasibility has been covered in the following appendices:

A. VRO-DDE™ Configuration, Performance, and Trade-off Considerations.

B. VRO-DDE™ Proposed Demonstration Unit Performance Projections.

C. VRO-DDE™ Full-scale Unit Configuration and Performance Projections.

Highlights of these findings are summarized in this section.

6.1 Configuration, Performance, and Trade-off Considerations

Introduction: **APPENDIX "A"** provides a general discussion of the configuration and performance enhancement considerations for taking the technology from proof-of-concept to full-scale commercial applications. This discussion is focused toward the use of VRO-DDE system to provide power to the VARI-RO Integrated Pumping & Energy Recovery (VRO-IPER) system. This technology is focused toward the efficient desalting of seawater, and other saline water sources, by means of the reverse osmosis (RO) process. Due to this higher efficiency it has been projected that the combined technology can produce more water from a given quantity of thermal energy. This improved fuel-to-water efficiency was discussed previously in **SECTION 3.2.4**.

The system can also use nearly any thermal energy source, including: natural gas, fuel oil, diesel fuel, gasoline, coal, gas turbine exhaust, geothermal, and solar.

Function and Adaptive Features: The functional and adaptive features of the VRO-DDE system were summarized previously in **SECTION 3.2.1**. The engine configurations and operational characteristics that result in these features are covered in **APPENDIX "A"**. One of the key features of the system is the capability of saving "middleman" energy conversion losses, which was illustrated in **FIGURE 3-2**, and also in **FIGURE 6-1**.

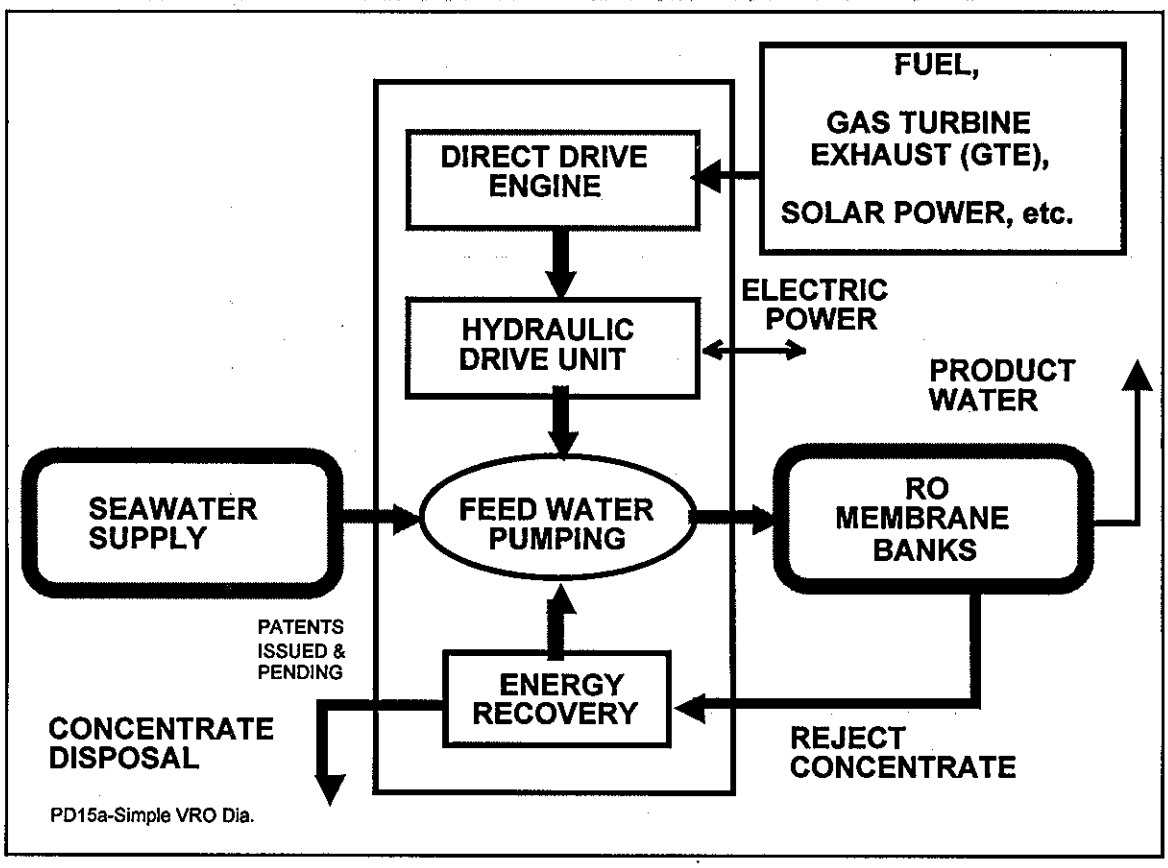

FIGURE 6-1 Simplified Diagram of Combined VRO-IPER and VRO-DDE Systems

The saving of "middleman" energy conversion losses results from the direct application of thermal energy through the VRO-DDE system to the feedwater pumping. This is accomplished without intermediate conversion to electric power, transmission to the site, and the conversion from electric power to pumping power.

6.2 Proposed Demonstration Unit Performance Projections

Introduction: **APPENDIX "B"** provides a general discussion, and performance projections, for a proposed demonstration project. The proposed demonstration project is directed toward a VRO-DDE system that would provide power to a VARI-RO Integrated Pumping & Energy Recovery (VRO-IPER) system. Under the proposed plan, a VRO-IPER-EM (electric motor powered) system would be installed first, and placed into operation in a reverse osmosis (RO) facility. The VRO-DDE system would then be added to the unit, and placed in operation. This phased installation provides the ability to show the operation and versatility of both systems.

The project proposal discussed is for an existing 300,000 GPD seawater desalination system — to provide a point of reference. However, the sizing and configuration can be adjusted to suit another capacity selection.

Energy Cost Saving Projection: This existing facility has a centrifugal pump, a reverse flow pump energy recovery turbine, and a variable frequency drive (CP-RFP-VFD) system. Preliminary analysis has shown that the VRO-IPER system can reduce the power requirements from 230 shp (172 kw) to 130 shp (97 kw), a saving of 100 shp (75 kw), or an electric power saving of 45%.

FIGURES 6-2 and **6-3** show two energy cost savings projections (Case B-1 and Case B-2) that provide an overview of the cost savings that are projected for the selected demonstration facility. The variables are that the electric power rate was kept constant at $0.06/kwh and the fuel cost was doubled from $3.00 to $6.00 per mmBTU, for Cases B-1 and B-2 respectively.

For this preliminary cost projection analysis, a VRO-IPER saving of 40% and a VRO-DDE efficiency of 45% were used.

Facility Capacity, MGD	**0.30**	NOTES:		
Membrane Pressure, PSI	910			
Recovery Ratio	45%			
Electric power rate, $/kwh	$0.06			
Fuel cost, $/mmBTU	$3.00	$18/bbl equivalent		
Availability Factor	92%			
Assumed VRO-DDE efficiency	45%	Semi-Closed Loop (SCL) version		
CP-RFP-VFD, kwh/kgal	15.00	Nominal consumption		
VARI-RO™ IPER, % improvement	40.0%			
VARI-RO™ IPER, kwh/kgal	9.00			
Type of System M = million	**Annual Energy Cost**	**Annual Energy Savings**		**Percent Savings**
CP-PW-VFD-SP	**$0.091 M**			
VRO-IPER-EM Version	**$0.054 M**	**$0.036**	**M**	**40%**
VRO-DDE-SCL Version	**$0.020 M**	**$0.071**	**M**	**78%**

EX92a-TWC IPER.DDE. 1-26-01 Case B-1

FIGURE 6-2 Demonstration Energy Cost, Case B-1

Facility Capacity, MGD	**0.30**	NOTES:		
Membrane Pressure, PSI	910			
Recovery Ratio	45%			
Electric power rate, $/kwh	$0.06			
Fuel cost, $/mmBTU	$6.00	$36/bbl equivalent		
Availability Factor	92%			
Assumed VRO-DDE efficiency	45%	Semi-Closed Loop (SCL) version		
CP-RFP-VFD, kwh/kgal	15.00	Nominal consumption		
VARI-RO™ IPER, % improvement	40.0%			
VARI-RO™ IPER, kwh/kgal	9.00			
Type of System M = million	**Annual Energy Cost**	**Annual Energy Savings**		**Percent Savings**
CP-PW-VFD-SP	**$0.091 M**			
VRO-IPER-EM Version	**$0.054 M**	**$0.036 M**		**40%**
VRO-DDE-SCL Version	**$0.039 M**	**$0.051 M**		**57%**

EX92a-TWC IPER.DDE. 1-26-01 Case B-2

FIGURE 6-3 Demonstration Energy Cost, Case B-2

Based on the assumed nominal conditions, a saving of about $36,000 (40%) per year can be provided by the VRO-IPER-EM system for this 300,000 GPD facility. The savings provided by the VRO-DDE system is about $71,000 (78%) and $51,000 (57%) per year at the lower and higher fuel cost, respectively. This example only illustrates the general effect of different energy rates. If lower cost fuel can be obtained, such as nearby landfill gas, then the cost savings would be greater.

6.3 Full-scale Unit Configuration and Performance Projections

Introduction: **APPENDIX "C"** provides a general discussion, and performance projections, for Full-scale systems. The Full-scale systems are directed toward a VRO-DDE system that would provide power to a VARI-RO Integrated Pumping & Energy Recovery (VRO-IPER) system. The technology offers several options for implementation of "Low Energy" cost desalting, as follows:

Option A **Electric Powered Option**: First install the VRO-IPER-EM (electric motor powered) system, and include the capability to add the VRO-DDE system at a later date. This provides the capability to initially take advantage of cost-saving lower electric power consumption.

Option B **Fuel Powered with Electric Power Standby**: Second install the VRO-DDE system to power the VRO-IPER system, which would lower the operating cost by using a lower cost energy source.

Option C **Fuel or Electric Powered with Generating Capability**: Incorporate "DUAL-USE" capability to also generate electric power with the combined VRO-DDE and VRO-IPER system. This capability would allow the system to operate on either electric power or fuel. In addition, it would allow electric power to be generated when water production is not required, or when there are periods of peak electric power demand elsewhere in the power grid. This capability would have been particularly useful during the recent electric power crisis in California. In a multi-train facility, both electric power and water could be produced at the same time.

Option D **Fuel Powered**: This option is to have a "STAND-ALONE" desalination facility. This would be to install both the VRO-IPER and VRO-DDE systems for using a thermal energy source. This option provides a capital cost saving because an electric power supply sub-station, and the related infrastructure, would not be needed.

Option A is well suited for any region that needs to increase the water supply, and/or to provide for drought and other disaster emergencies. Options B & C are particularly well suited to regions that have both water and electric power generation shortages, and where electric power costs are high as compared to other fuel sources. Option D would be for regions where using thermal energy sources are preferred, or mandatory, over using electric power — plus this option allows the use of lower cost energy sources (including solar) from the beginning of facility operation.

A desalting train capacity of 4.2 MGD (million gallons per day) was selected as the Full-scale unit for preliminary performance projection. Six units of this capacity would produce 25 MGD of desalted seawater. The purpose of selecting this capacity is that it is the same capacity as presently being considered for the Tampa Bay desalination facility that is due to be in operation by December 2002. However, a recovery ratio of 50% and 900 PSI operation has been selected, which would be suitable for a California coastline application. Because the Tampa Bay application has feedwater with higher average temperature, and lower average salinity, it is likely that different recovery and pressures will be selected for this facility.

Based on the assumptions used, the energy cost savings projected are:

Option A $1 million per year.

Option B $2 to $3.5 million per year, depending on the fuel cost.

Energy Cost Saving Projection: **FIGURES 6-4** and **6-5** show two energy cost savings projections (Case C-1 and Case C-2) that provide an overview of the cost savings that are projected for the selected Full-scale facility. The variables are that the electric power rate was kept constant at $0.06/kwh and the fuel cost doubled from $3.00 to $6.00 per mmBTU, for Cases C-1 and C-2 respectively.

Based on the assumed nominal conditions, a saving of about $1 million per year can be provided by the VRO-IPER-EM system for this 25 MGD (94,600 m^3/d) facility. The savings provided by the VRO-DDE system is about $3.5 million and $2 million per year at the lower and higher fuel cost, respectively.

Facility Capacity, MGD	**25.00**	NOTES:
Membrane Pressure, PSI	900	
Recovery Ratio	50%	
Electric power rate, $/kwh	$0.06	
Fuel cost, $/mmBTU	$3.00	$18/bbl equivalent
Availability Factor	92%	
Assumed VRO-DDE efficiency	45%	Semi-Closed Loop (SCL) version
CP-PW-VFD-SP, kwh/kgal	10.00	Full-scale nominal conditions
VARI-RO™ IPER, % improvement	20.0%	
VARI-RO™ IPER, kwh/kgal	8.00	

Type of System M = million	Annual Energy Cost	Annual Energy Savings	Percent Savings
CP-PW-VFD-SP	$5.037 M		
VRO-IPER-EM Version	$4.030 M	$1.007 M	20%
VRO-DDE-SCL Version	$1.451 M	$3.586 M	71%

EX92a-TWC IPER.DDE. 1-26-01 Case C-1

FIGURE 6-4 Full Scale Energy Cost, Case C-1

Facility Capacity, MGD	**25.00**	NOTES:
Membrane Pressure, PSI	900	
Recovery Ratio	50%	
Electric power rate, $/kwh	$0.06	
Fuel cost, $/mmBTU	$6.00	$36/bbl equivalent
Availability Factor	92%	
Assumed VRO-DDE efficiency	45%	Semi-Closed Loop (SCL) version
CP-PW-VFD-SP, kwh/kgal	10.00	Full-scale nominal conditions
VARI-RO™ IPER, % improvement	20.0%	
VARI-RO™ IPER, kwh/kgal	8.00	

Type of System M = million	Annual Energy Cost	Annual Energy Savings	Percent Savings
CP-PW-VFD-SP	$5.037 M		
VRO-IPER-EM Version	$4.030 M	$1.007 M	20%
VRO-DDE-SCL Version	$2.903 M	$2.134 M	42%

EX92a-TWC IPER.DDE. 1-26-01 Case C-2

FIGURE 6-5 Full Scale Energy Cost, Case C-2

7. FACILITY OPTIMIZATION WITH THE VARI-RO SYSTEM

7.1 Optimizing Energy Use with the VARI-RO System

The VRO-IPER and VRO-DDE systems provide the capability for several different operating options as covered in **SECTION 6.3**. The options for implementation of the technology are as follows:

Option A **Electric Powered (VRO-IPER-EM)**:

Option B **Fuel Powered with Electric Power Standby (VRO-DDE)**:

Option C **Fuel or Electric Powered with Generating Capability (DUAL USE)**:

Option D **Fuel Powered (STAND ALONE)**:

Option A is well suited for any region that needs to increase the water supply, and/or to provide for drought and other disaster emergencies. Options B & C are particularly well suited to regions that have both water and electric power generation shortages, and where electric power costs are high as compared to other fuel sources. Option D would be for regions where using thermal energy sources are preferred, or mandatory, over using electric power — plus this option allows the use of lower cost energy sources (including solar) from the beginning of facility operation.

This versatility provides the facility designer, and user, a new tool toward optimization of desalination total water cost (TWC). The evaluation would be determined on the basis of the cost and availability of electric power, and other energy sources.

7.2 Gas Turbine Exhaust Thermal Energy Recovery Example

This is an optimization example to reduce "middleman" energy conversion losses and get high efficiency desalination using the energy from gas turbine exhaust.

A method now widely being used to get high efficiency electric power production, with large capacity gas turbines, is called the combined cycle. In the combined cycle, gas turbines are used in the front end of the power generation system by driving electric generators. Then a heat recovery steam generator (HRSG) replaces the boiler for the steam plant. The HRSG recovers thermal energy from the gas turbine hot exhaust for the steam plant. The exhaust temperature is typically about 1100 °F (593 °C), providing 1000 °F (538 °C) steam for the electric power generation.

With the VRO-DDE system an alternative would be to directly use the gas turbine exhaust (GTE) to desalt water using the reverse osmosis process, as shown in **FIGURE 7-1**. For the VRO-DDE-GTE system, a heat source exchanger (HSE) provides the energy source to drive the VRO-IPER system. The remaining thermal energy in the exhaust gas after leaving the HSE can be used for other purposes, such as feed water heating (FWH) for the steam generating side of the facility.

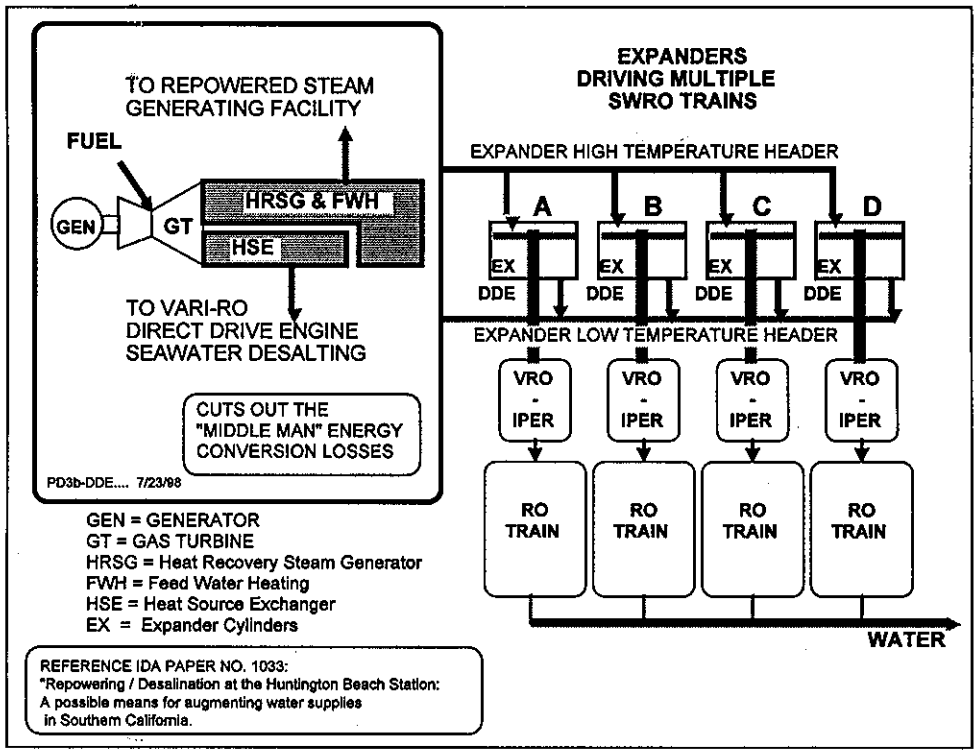

FIGURE 7-1 Direct Drive Engine Gas Turbine Exhaust Desalting System

This VRO-DDE-GTE version of the technology provides the capability to cut out the "middleman" losses of the conventional method, which includes the: HRSG, steam turbine, electric generator, transmission lines, transformers, variable frequency drives (if centrifugal pumps are used), and electric motors. The result is higher fuel-to-water efficiency.

7.3 Recovery Ratio Optimization with VARI-RO Pumping

The VARI-RO integrated pumping and energy recovery (VRO-IPER) system has relatively flat specific energy consumption versus recovery ratio at a constant membrane pressure, as mentioned in **SECTION 3.1.1**. This feature of the VARI-RO system provides the RO system designer a new tool for the optimization of the facility for lowest total water cost (TWC), by taking advantage of typical membrane characteristics as illustrated in **FIGURES 7-2** and **7-3**.

The potential benefits for facility optimization, and lower recovery ratio operation, for seawater desalination were covered in a previous report (Childs and Dabiri, 1995, Page 25). As a result of the flat energy consumption characteristic of the VRO-IPER system, it is possible to have lower energy consumption at lower recovery ratios than can be accomplished with conventional pumping — by operating at lower pressures.

As shown in **FIGURE 7-2**, the membrane pressure requirement is lower at lower pressures. Conversely, at the same pressure, fewer membrane elements are needed at lower recovery ratios as shown in **FIGURE 7-3**. In both cases, the quality of the water produced is better at lower recovery ratios.

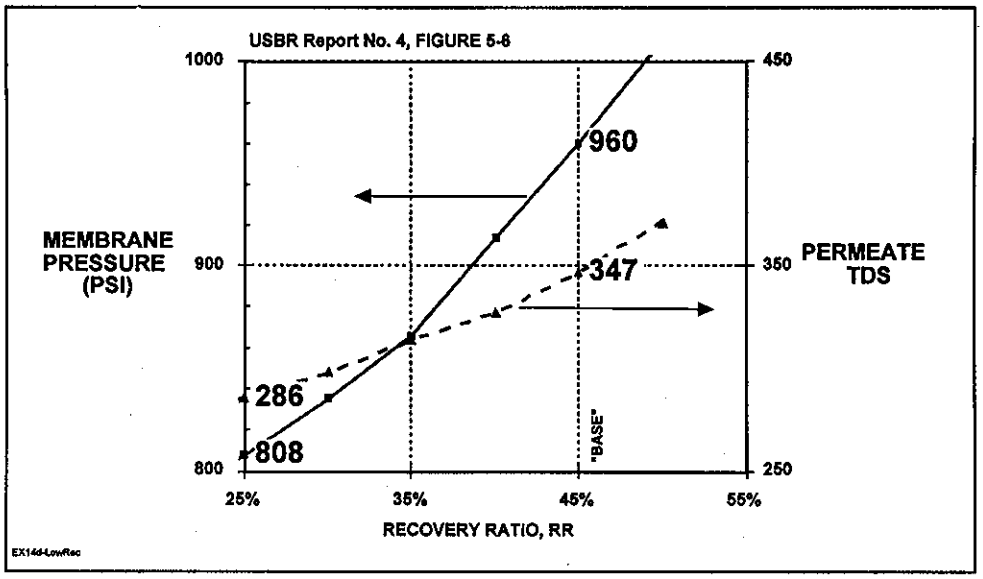

FIGURE 7-2 Lower Pressure and Permeate TDS at Lower Recovery Ratios

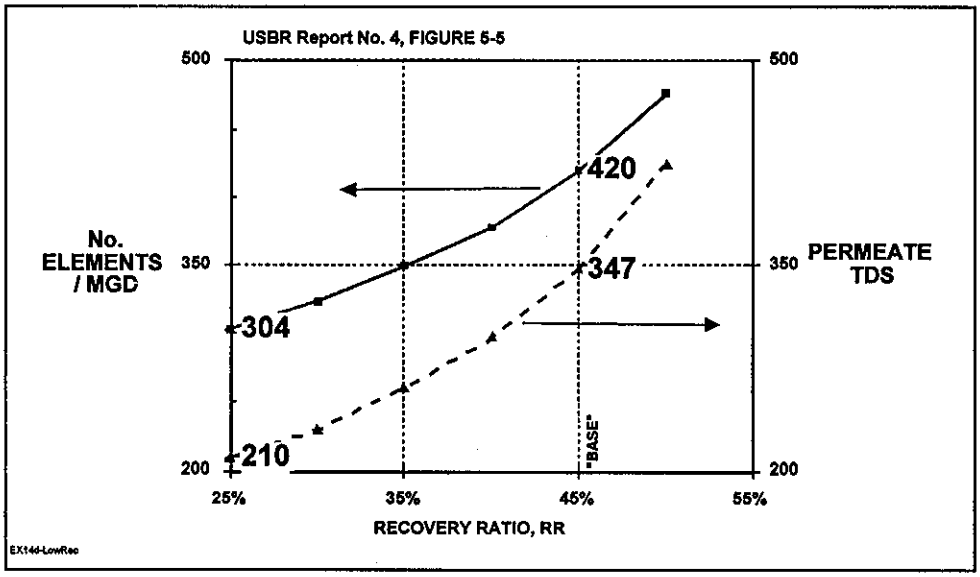

FIGURE 7-3 Fewer Membrane Elements and Lower Permeate TDS at Lower Recovery Ratios

Advantages of lower recovery ratios include:

1. Lower membrane pressure for the same membrane quantity, resulting in lower energy consumption when the VARI-RO system is used.
2. Conversely, fewer membranes can be used if the pressure is kept the same.
3. The water quality is improved at lower recovery ratios.
4. The salinity of the concentrate is lower, which reduces the fouling potential.
5. At lower concentrate salinities, it may be possible to improve the chemical pretreatment for lower cost or less environmental impact.
6. With a lower salinity concentrate, the environmental issues related to ocean brine

disposal may be improved. For example, less mixing for dilution of the concentrate may be possible.

Disadvantages of lower recovery ratios include:

1. The feedwater flow is higher for a given product water production.
2. Higher capacity intake and discharge piping are needed.
3. More feedwater needs to be pumped and pretreated.
4. The chemical costs could be higher, if some modification of the chemical pretreatment is not made to take advantage of the lower concentrate salinity.

In many cases, it may be more advantageous to operate at a lower recovery ratio to save energy, improve the product water quality, and reduce the potential for membrane fouling by providing a greater safety margin. To evaluate these factors, a tradeoff study is needed.

There is additional optimization discussion related to techniques that can be used to improve membrane utilization, provide lower TDS product water, and reduce energy consumption is covered in **APPENDIX "C",** Page 3.

8. ECONOMIC ANALYSIS

As stated previously in **SECTION 1.3.1**, seawater desalination is often considered too energy intensive. This was previously true for thermal distillation, but it is no longer a true statement. This is a result of lower energy requirements for conventional SWRO, and the further improvements that can be provided by the VRO-IPER-EM and VRO-DDE systems covered in this report. For illustration purposes, the relative energy consumption for seawater desalination processes is shown in **FIGURE 8-1**.

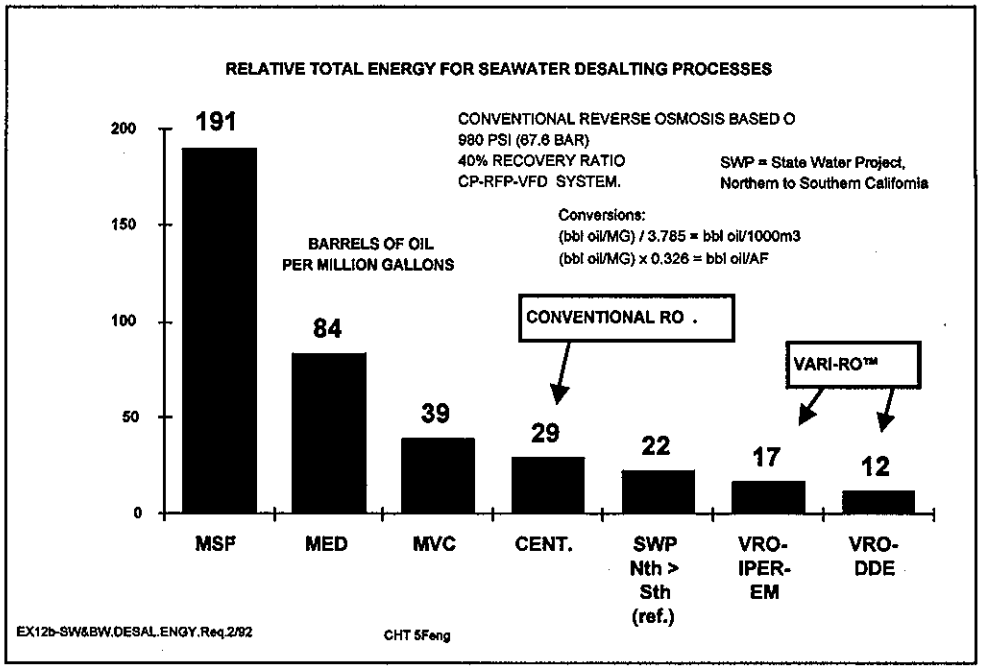

FIGURE 8-1 Relative Energy Consumption for Seawater Desalination

This figure illustrates that seawater can be desalted with less energy than pumping water from Northern to Southern California via the State Water Project (SWP Nth>Sth). For reference, the electric power requirement for the SWP Nth>Sth transfer of water is about equal to the power use by the City of San Francisco (nearly 900 MW).

The potential economic value provided by the VARI-RO desalination systems were summarized in **SECTION 6.3** for full-scale SWRO facilities. In this section, an energy cost saving projection was made for a 25 MGD (94,600 m^3/d) facility. For the energy cost conditions of electric power at $0.06 per kilowatt hour and natural gas cost of $3 per mmBTU (million BTUs), the projected savings were about $1 million per year for the VRO-IPER-EM system, and $3.5 million for the VRO-DDE system.

Assuming a 30-year life for the facility, the cost saving potential would be:

VRO-IPER-EM	$30 million
VRO-DDE	$105 million

As a calibration point for the value of these savings, the capital cost of a 25 MGD SWRO facility could be about $100 million. This indicates that the VRO-DDE system energy cost savings would be approximately equivalent to the total capital cost of the facility. This is a substantial saving potential.

9. CONTINUED DEVELOPMENT RECOMMENDATIONS

9.1 VARI-RO Direct Drive Engine Pilot Plant Unit

There have been two primary goals for the present Pilot Plant unit, as follows:

1. To prove the function and operational benefits of the system.
2. To improve the configuration, and project the energy consumption for full-scale higher capacity units.

With respect to these two goals, the project has been very successful.

The Economic Analysis in **SECTION 8** has shown that the energy savings potential is quite substantial. Also, the potential for improved configuration and operating characteristics were given in **SECTION 6**, and **APPENDICES "A", "B"**, and **"C"**. These improvements validate that a program to continue the VARI-RO system development should be undertaken—and is recommended.

9.2 Demonstration of Full-scale Capacity Unit

It is recommended that a demonstration project be implemented to design, manufacture, and test a full-scale unit in the 200,000 to 600,000 GPD (757 to 2,270 m^3/d) capacity range. The objectives for this project include the following:

- Show that the efficiency projections for a Full-scale Commercial capacity unit can be achieved.
- Demonstrate to the desalting industry that the technology is viable and should be considered as a preferred method for future desalting plants, and as a retrofit for existing facilities.
- Put the VARI-RO system side-by-side with a conventional system to show the installation, operational, and energy saving features of the technology.

10. BIBLIOGRAPHY

Boyle Engineering Corporation; **"Desalination For An Urban Water Supply"**, prepared for the California Urban Water Agencies, July 1991.

Childs, Willard D., Ali E. Dabiri, Ph.D.; **"VARI-RO™ "Low Energy" Desalting for the San Diego Region"**, (the VARI-RO study), Final Technical Report, WTTP Report No. 4, Bureau of Reclamation, June 1995.

Childs, Willard D., Ali E. Dabiri, Ph.D.; **"VARI-RO™ Desalting Pilot Plant Testing and Evaluation"**, Final Technical Report, WTTP Report No. 30, Bureau of Reclamation, May 1998.

Childs, Willard D., Ali E. Dabiri, Ph.D.; **"VARI-RO™ Direct Drive Engine Study"**, Final Technical Report, WTTP Report No. 33, Bureau of Reclamation, September 1998.

MWD (Metropolitan Water District of Southern California), **"Seawater Desalination Plant for Southern California"**, Preliminary Design Report No. 1984, October 1993.

APPENDIX "A"

VRO-DDE™ Configuration, Performance, and Trade-off Considerations

APPENDIX "B"

VRO-DDE™ Proposed Demonstration Unit Performance Projections

APPENDIX "C"

VRO-DDE™ Full-scale Unit Configuration and Performance Projections

CONFIDENTIAL AND PROPRIETARY INFORMATION

NOTE: Because of expected future patent applications, the information in **APPENDICES "A", "B",** and **"C"** is considered confidential to Vari-Power Company; and cannot be released to the general public.

These appendices can be made available for review by interested parties through the execution of a Confidentiality Agreement.