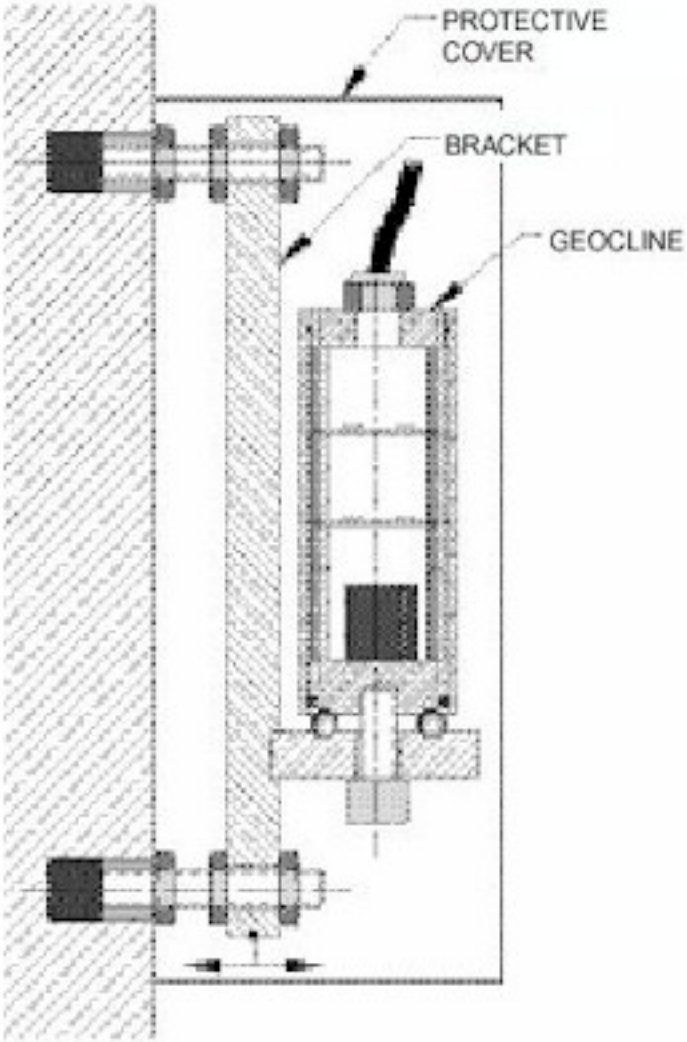

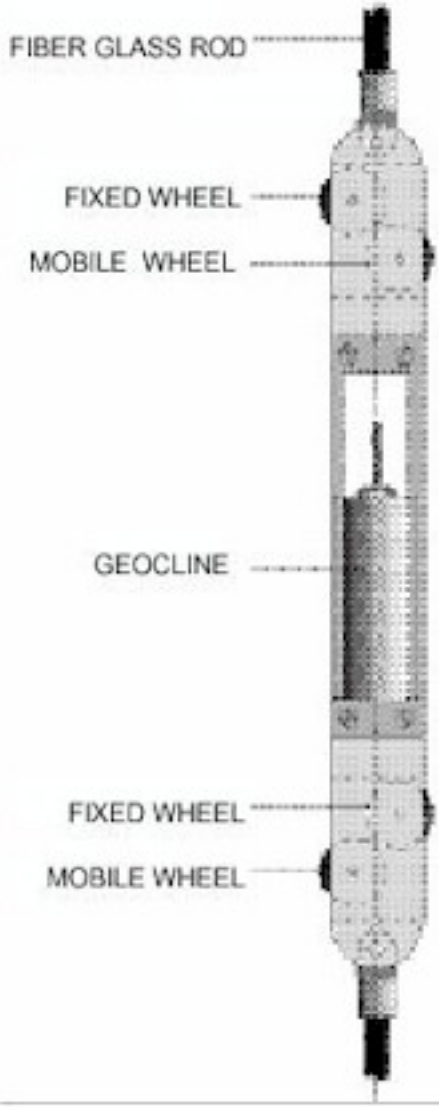

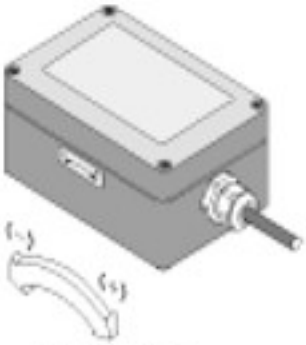

Longitudinal configuration

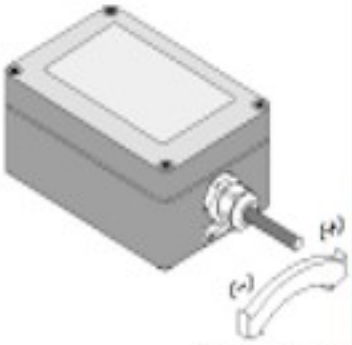

Transverse configuration