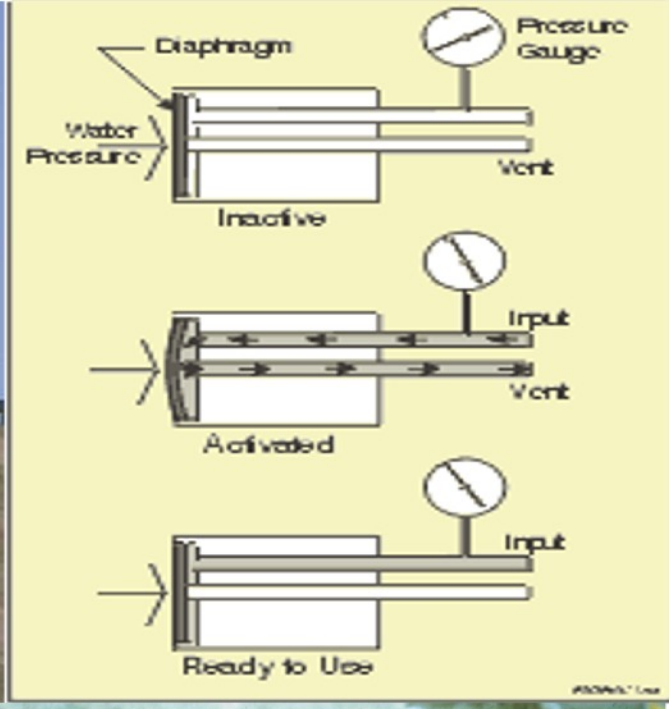
Diaphragm
Pressure Gauge
Water Pressure
Vent
Inactive
Input
Vent
Activated
Input
Ready to Use