WATER OPERATION AND MAINTENANCE

BULLETIN NO. 158

December 1991

USE COPY - DO NOT REMOVE

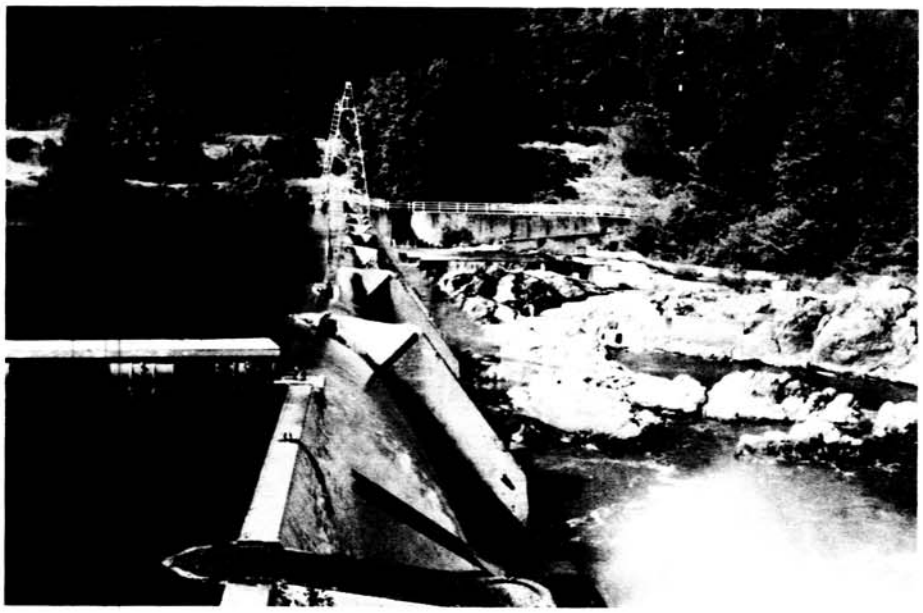

USE COPY - DO NOT REMOVE

IN THIS ISSUE

Research and Development for Better Trash Screening and Cleaning Devices
The Importance of Proper Operation of Air Valve Assemblies
Trouble From the Sun
Recent Experience With Excitation System Upgrading in Hydroelectric Powerplants
Intake Tower Replacement for Bumping Lake Dam
Personal Computer Maintenance Management System
Water Banking — Minidoka–Palisades and Boise Projects
Water Conservation Program — Casper–Alcova Irrigation District and City of Casper
Savage Rapids Diversion Dam

UNITED STATES DEPARTMENT OF THE INTERIOR
Bureau of Reclamation

The Water Operation and Maintenance Bulletin is published quarterly for the benefit of those operating water supply systems. Its principal purpose is to serve as a medium of exchanging information for use by Bureau personnel and water user groups for operating and maintaining project facilities.

While every attempt is made to insure high quality and accurate information, Reclamation cannot warrant nor be responsible for the use or misuse of information that is furnished in this bulletin.

* * * * *

Ferne Studer, Managing Editor
Bill Bouley, Technical Editor
Facilities Engineering Branch
Engineering Division
Denver Office, Code D-5210
PO Box 25007, Denver CO 80225
Telephone: (303) 236-8087 (FTS 776-8087)

Cover photograph:

Savage Rapids Diversion Dam, Grants Pass Project, Oregon, showing crest of dam.
July 1991

Any information contained in this bulletin regarding commercial products may not be used for advertisement or promotional purposes and is not to be construed as an endorsement of any product or firm by the Bureau of Reclamation.

CONTENTS

WATER OPERATION AND MAINTENANCE BULLETIN

No. 158

	Page
Research and Development for Better Trash Screening and Cleaning Devices	1
The Importance of Proper Operation of Air Valve Assemblies	7
Trouble From the Sun	11
Recent Experience With Excitation System Upgrading in Hydroelectric Powerplants	17
Intake Tower Replacement for Bumping Lake Dam	22
Personal Computer Maintenance Management System	28
Water Banking — Minidoka–Palisades and Boise Projects	29
Water Conservation Program — Casper–Alcova Irrigation District and City of Casper	32
Savage Rapids Diversion Dam	35

RESEARCH AND DEVELOPMENT FOR BETTER TRASH SCREENING AND CLEANING DEVICES

by Tony Wahl[1]

Problems with operation and maintenance of trashracks, trash screens, and associated cleaning equipment are common on nearly all Reclamation projects. A new Reclamation research program is attempting to identify the most common problems and develop alternatives to address them. Personnel from the Hydraulics, Mechanical, Water Conveyance, and Facilities Engineering Branches in the Denver Office are conducting the study. Initial activities in the research program have been a review of the available literature, a survey of field problems, and visits to several sites experiencing severe problems.

The survey of field problems was sent to 90 Regional and Project Offices in March 1990. Many offices forwarded the survey to individual irrigation districts. A total of 26 offices responded to the survey, giving information on 85 different sites. The results were tabulated to determine the most common types of problems and debris, and the types of equipment experiencing problems in the field.

The most common problems reported in the survey were with the actual raking and cleaning of trashracks and trash screens. Many of these problems were associated with sites where trashracks or trash screens must be cleaned manually, using hand-held trash rakes or other methods. Many sites also reported that certain designs of mechanical trash rakes are ineffective for specific types of debris, thus requiring additional manual labor.

The second most commonly reported problem in the survey was with sediment. Problems caused by sediment varied from loss of capacity at turnouts and diversions to interference with mechanical equipment such as automatic trash rakes. The majority of projects reporting sediment problems deal with those problems only on an annual basis. During the nonirrigation season, sediment deposits can normally be easily removed. In most cases the costs associated with this annual maintenance are minimal. Higher maintenance costs are incurred if sediment must be removed during canal operation, or if sediment must be removed from a large portion of the distribution system.

Less common problems reported in the survey included corrosion, poor screening of debris (i.e., debris passing through the racks or screens), mechanical problems with raking equipment, and problems caused by ice. Corrosion protection systems are not normally cost-effective for small structures. Instead, corrosion of trashracks and trash screens is generally planned for in the original design by providing larger structural members that are expected to corrode during their service life. Poor screening of debris generally results from the use of racks or screens with excess clear spacing. More effective debris capture can be achieved by reducing the bar spacing or screen size, but this increases the cleaning requirements. The cleaning costs must be balanced with the cost of problems caused by debris passing the structure. Mechanical problems with raking equipment are diverse, and are best dealt with by the field personnel familiar with the equipment. Some types of mechanical rakes have been more prone to mechanical

[1] Tony Wahl is a Hydraulic Engineer employed by the Bureau of Reclamation, Hydraulics Branch, Denver, Colorado.

problems, as described below. Ice problems can be dealt with using a number of methods. Heating of trashracks, use of air bubbler systems, and the use of discontinuous trashrack bars can all be effective solutions.

The most common types of debris reported as problems on Reclamation projects were, in descending order: moss/aquatic weeds, floating debris/driftwood, windblown weeds, and sediment. Many sites reported that multiple types of debris occur at one location. The survey and site visits, described below, showed that different types of equipment are better suited than others to specific types of debris.

Following the completion of the survey, two sites were selected for visits by members of the project team. The first site visit was to the San Luis Valley Project, Closed Basin Division. On this project a system of wells, closed conduit laterals, and open channels deliver water from the Closed Basin to the Rio Grande River. The Franklin Eddy Canal serves as the main conveyance channel for the project. The project is being constructed in five stages, three of which were complete at the time of the visit. Low flows in the conveyance channel during early stages of the project have contributed to extremely heavy weed growth. This has reduced the capacity of the channel and caused problems at check structures and turnouts, most of which are cleaned manually. The project has replaced many of the original mesh screens with perforated plate screens that are easier to clean, but the cleaning effort required is still excessive. The project is currently introducing grass carp into the canals in an effort to control the weed growth.

The San Luis Valley Project also experiences problems with ice formation for about 6 months of the year. During our visit we examined a fish screen that had been removed from service due to ice problems. The screen was constructed from 3/4-inch-diameter steel pipe, and was required to prevent the escape of grass carp from the project canals. It became plugged with ice during a test to determine if the screen could be maintained throughout the winter. Following our visit, resistance heating elements were installed inside the bars. This modification was successful in keeping the screen free of ice during the winter of 1990-91.

The second site visit by the team was to the Central Arizona Project (CAP). The CAP has a large number and variety of mechanical trash rakes on turnouts and pumping plant intakes, including catenary-, hoist-and-carriage-, and hydraulic-type rakes. The catenary-type trash rake (figure 1) consists of a continuous chain of raking beams that travel up the rack face, then back down into the water just upstream of the rack. At the top of the rake travel, a scraper mechanism removes collected debris from the raking bars. The catenary-type trash rakes on the CAP have been ineffective with stringy aquatic weeds, because the scraper bars have not done a good job of removing the weeds from the raking beams. Consequently, weeds get carried back down into the water to be raked again, or become tangled in the gears and chains of the trash rake. At Brady Pumping Plant (figure 2), field personnel have devised a wiper made from rubber conveyor belt that replaces the original scraper bar. The wiper has improved the operation of the trash rake considerably. However, some manual labor is still required to remove weeds that are not removed by the wiper. Another problem with catenary-type rakes has been their ineffectiveness for raking large tumbleweeds. Because of the thin section of the raking beams, tumbleweeds tend to just roll off the raking beams.

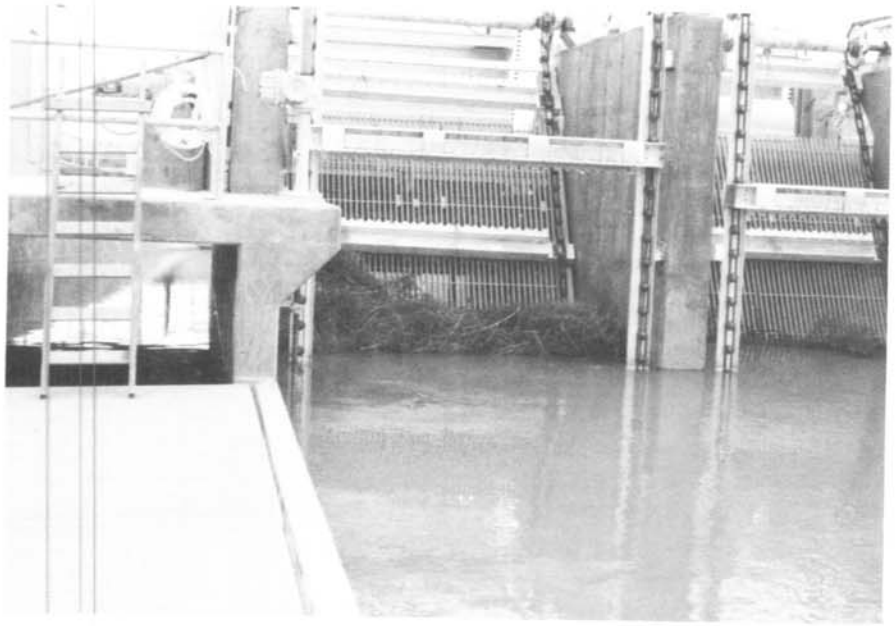

Figure 1. – A typical catenary-type trash rake located on the Government Highline Canal near Grand Junction, Colorado.

Figure 2. – Photograph showing the wiper installed by field personnel on the catenary rakes at Brady Pumping Plant. The wiper is constructed from rubber conveyor belt.

Hoist-and-carriage-type trash rakes (figure 3) have a large rake head which travels on rails mounted along the edge of the trashrack. The rake head folds away from the rack face during the downward travel sequence of the rake operation. At the bottom of the rack, the head contacts a trip mechanism that swings the head into position. Teeth extend into the spaces between the rack bars. At the top of the rack, the rake head dumps the collected debris into a trough or other collection system. Since the rake head rides on rails and never touches the rack, the clearance between the rake head and the rack face must be kept to a minimum to obtain effective cleaning. This requires tight tolerances in the manufacture and installation of the rake and trashracks. The hoist-and-carriage-type rakes at Bouse Hills Pumping Plant on the CAP exemplify the problems when there are excessive clearances. At this plant the rake must carry collected debris over a concrete headwall above the trashrack, before dumping into the collection trough on the intake deck. A 1- to 2-inch clearance between the rake teeth and the headwall allows debris to fall out of the rake head and back into the water. Stringy weeds cause the greatest difficulty because they often hang out of the rake head, and their weight then pulls them back into the water.

Sediment deposition at the bottom of the trashrack also can interfere with the operation of the hoist-and-carriage-type rakes. At Hassayampa Pumping Plant on the CAP, sediment has built up on several occasions around the base of the trashracks to the point that the rake head cannot reach the bottom of the rack. This prevents the rake head from engaging the trip mechanism and swinging into the raking position.

In addition to these problems, the CAP has had many mechanical problems with the hoist-and-carriage-type rakes. These include bird-caging of hoist cables, problems with motor alignment, and missing or failed limit switches. The CAP has modified many of the hoist-and-carriage-type rakes to solve these problems.

Figure 3. – Hoist-and-carriage-type trash rakes at Bouse Hills Pumping Plant on the Central Arizona Project.

The hydraulic-type trash rake (figure 4) is a new design that mimics the physical motions used in manual raking operations. It consists of a telescoping rake head that lifts clear of the rack face during the downward travel of the rake head. Once fully extended, the rake head swings down into position to bear on the rack face. The rake head then retracts along the rack face with the hydraulic system maintaining contact between the rake head and the rack face. Trash is dragged to the top of the rack. At the top of the rack, the rake head continues to retract, pulling weeds completely off the rack face. For use on large rack areas, indexing rake heads can be used so that one rake head serves multiple rack sections. This reduces the cost per unit area in comparison with catenary- or hoist-and-carriage-type trash rakes.

Figure 4. – Indexing hydraulic-type trash rake installed at the Santa Rosa Turnout on the Central Arizona Project.

On the CAP, an indexing hydraulic-type rake has been installed on the Santa Rosa Turnout, which was originally designed to be manually raked. A non-indexing hydraulic rake also has been installed at the Harquahala Valley Irrigation District Turnout. These trash rakes have worked successfully with both stringy weeds and mosses, and bulky weeds such as tumbleweeds. These rakes have had lower maintenance requirements than other designs because of the low number of moving parts, and maintenance is simplified because the entire rake is above the water surface when not in use. Also, there is no mechanical equipment at the bottom of the trashrack, so sediment deposition around the base of the trashrack is less likely to cause problems with the operation of the trash rake. Hydraulic-type trash rakes are now the only type of trash rake being specified for new construction on Reclamation projects.

The literature search has identified a number of new and unique trashrack and trash screen designs in addition to the designs already being used by Reclamation. Some of these designs include the self-cleaning static screen (figure 5) used at several sites by the California Department of Fish and Game, and a self-cleaning turbulent flow screen being applied at small on-farm sites by the Agricultural Research Service. Other unique trashrack and trash screen designs that have been tested in recent years on Reclamation

projects and at other sites include perforated plate screens, various configurations of welded wedge-wire screens, and a modified trashrack crossbar being used on the Yakima Project. Each of these designs offers potential for improved performance and reduced maintenance requirements. Unfortunately, few systematic studies of these designs have been performed, so design data are often difficult to locate.

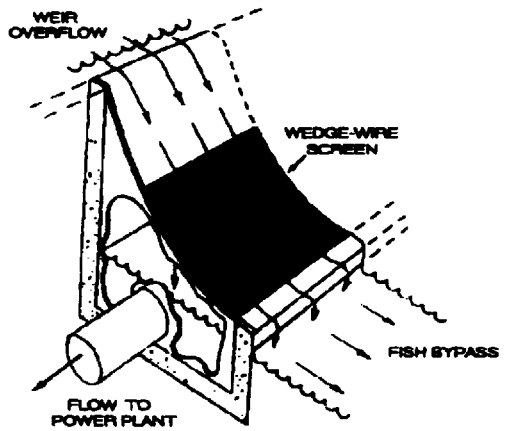

Figure 5. – General arrangement of a self-cleaning static screen used to exclude fish from small hydropower intakes (Strong, J. J. and R. F. Ott, "Intake Screens for Small Hydro Plants," SHP News, No. 4, 1989).

The team is currently completing a report on the initial investigations, including complete results of the survey and literature search. A test facility is planned for construction in the hydraulics laboratory in Denver that will be used to test many of the new trashrack and trash screen designs identified in the literature search, survey, and site visits. This testing will evaluate the effectiveness of various designs and will provide valuable information that may be used by designers when selecting and sizing debris control equipment. Some testing of raking and cleaning devices also may be conducted. Development of designs having improved performance and reduced operation and maintenance requirements will help field offices to reduce costs and improve the quality of delivered water.

For more information on the study and ongoing testing, please contact Tony Wahl (D-3752) at (303) 236-6146 or FTS 776-6146.

THE IMPORTANCE OF PROPER OPERATION OF AIR VALVE ASSEMBLIES

by Bill Bouley, P.E. and Lynn J. Bernhard, P.E.[1]

Introduction

Air valve assemblies are constructed in high points of pipelines and penstocks for two main reasons: (1) to release air which could become trapped during filling operations; and (2) to admit air when the pipe is being drained. On tandem gate systems where two gates are relatively close, sophisticated air valve assemblies are generally not required. A recent incident at Hyrum Dam in Utah illustrates the importance of proper operation of air valve assemblies in pipeline operations.

Incident

The penstock below Hyrum Dam is a 34-inch-diameter steel pipe which conveys releases from the reservoir to the Wellsville Canal Pumping Plant, where a hydraulic turbine pump lifts the water to Wellsville Canal. Project features were initially constructed in 1934-1935. A 4-inch air vacuum/air release valve was installed in the penstock to admit air when draining the penstock and release air when charging or filling the penstock. Air vacuum valves are located in the gate chamber on the upstream end of the penstock. The penstock had recently been repainted under a rehabilitation and betterment managed by a consultant for the district.

The consultant filled the penstock to check for any leakage in the pipe. After charging (filling) the pipe, he closed the regulating gates at the dam, closed the guard isolation valve (gate valve) located below the air vacuum/air release valve, and closed the pump turbine gates. He assumed that the penstock would remain full of water. But the pump turbine gates leaked sufficiently to create a vacuum in the pipe. The vacuum was enough to lead to the collapse of a 40-foot section of pipe.

Personnel from the Utah Projects Office visited the site to determine the extent of the failure. Projects personnel recommended that the district perform the following:

1. Disassemble the air relief assembly to determine if it is functional.

2. Measure the apparently undamaged pipe and determine if it is deformed.

3. Examine the pipe coatings, both inside and out, for evidence of distress or disturbance.

Since the pipe collapse was caused by the consultant's operating error (the closing of the guard isolation valve), he obtained a replacement pipe section from Salt Lake City to be welded in place at Hyrum Dam.

Personnel of the Mechanical Branch of the Denver Office analyzed the pipe collapse. Their analysis determined that a vacuum of 19 feet would have been needed to collapse

[1] Bill Bouley is a Civil Engineer, Bureau of Reclamation, Facilities Engineering Branch, Denver, Colorado; Lynn J. Bernhard is a Civil Engineer, Bureau of Reclamation, Operations and Maintenance Branch, Utah Projects Office, Provo, Utah.

the 3/16-inch wall thickness of the penstock. The worst case possible with the air valve open and operating correctly would have been to have closed the regulating gate with the turbine running at full speed resulting in a vacuum buildup of 5 feet. The Denver Office found no economical reason for replacing the air vacuum/air relief valve with a standpipe since the existing valve assembly will function properly with adequate maintenance. The present air valve assembly is adequately sized. If a standpipe were used to replace the air valve assembly, the standpipe would have to extend at least 35 feet above the air valve assembly.

Two air valve assemblies will be installed by the consultant downstream of the regulating gates for the Hyrum Dam outlet works because there is about 400 feet of 34-inch-diameter penstock between the existing air valve assembly and the regulating gates. Gate seats for the pump turbine gates will be replaced to eliminate leakage when the system is not being operated.

Lesson Learned

Additionally, the Standing Operating Procedures (SOP) or other operating documents used for a facility should reflect the proper setting for the guard isolation valve below the air assembly when the downstream pipeline is to be placed in service. The guard isolation valve should be closed only for exercising or when maintenance is to be performed on an air assembly. The proper setting for the guard isolation valve should be posted adjacent to the air assembly if deemed appropriate by operating personnel. Instructions for proper filling and draining operations for the pipelines should also be included in facility operating manuals.

The error in operation by the consultant emphasizes the need for up-to-date operating instructions for facilities where damage from misoperation can be significant. All potential operators for facilities should receive adequate training to avoid similar misoperations that could affect water service.

Photo 1. - Hyrum Dam, Utah—Air vent valve at upstream end of pipe. 4/18/91

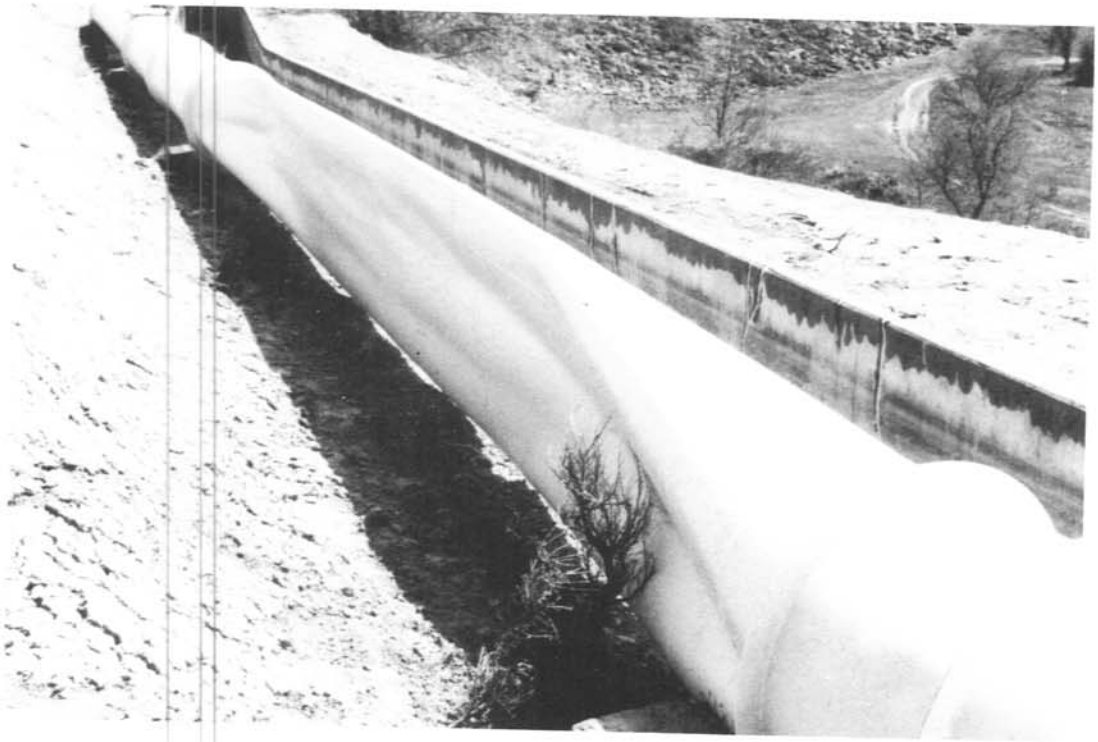

Photo 2. - Hyrum Dam, Utah—Collapsed pipe viewed from west. 4/18/91

Photo 3. – Hyrum Dam, Utah—Collapsed segment of pipe (arrow) viewed from downstream. Air valve is in background near control house for outlet works. 4/18/91

TROUBLE FROM THE SUN

by Hector A. Landa[1]

During a solar magnetic disturbance (SMD), bursts of charged particles produce strong gusts of solar wind. The magnetic field that they produce varies and modulates the earth's magnetic field. The result is a giant generator that gives rise to earth surface potentials. These earth surface potentials can produce large electric currents. The geomagnetically induced currents (GIC) normally travel through the earth's surface, but where the resistivity is high, they circulate through conducting mediums that offer a lower resistance. A transmission line terminated at neutral grounded transformers can carry this current, thus inducing problems on the entire electric power system. Among the major possibilities are overloads on equipment such as shunt capacitors and filters, misoperation of protection systems, and damage to transformers and generators.

The potential for high economic cost due to SMD-related activity is significant. The SMD that produced the greatest ill effects, so far, in the U.S. and Canadian power systems occurred on March 13, 1989. During that storm, several large power transformers failed (including a 1,200-MVA generator step-up transformer destroyed at the Public Service Electric and Gas Salem Nuclear Plant in New Jersey). Hundreds of misoperations were also reported. In the Province of Quebec, the entire Hydro-Quebec power system was blacked out for 9 hours. Analysis of the event [1][2] indicates that the entire northeast of the U.S., from Maryland up through the northeast coast, was very close to a cascading system collapse as well. A study [2] estimates that a geomagnetic blackout in that region of the U.S. could cost over $6 billion.

Sunspot activity that leads to SMD on the earth follows a cycle of approximately 11 years. The present cycle was forecast to reach its peak in 1990-1991. The SMD also follows an 11-year cycle but lags the solar activity by 3 to 5 years. Even though accurate prediction of the magnitude of this activity is difficult, the high solar activity and strong magnetic storms already observed indicate the possibility of substantial GIC activity for the coming years.

How Does GIC Affect the Power System?

Because the period of geomagnetic field fluctuation is typically 6 minutes, the GIC is a very low-frequency event and can be considered a direct current. This quasi-direct current enters the transformer neutral and magnetically biases the core in such a way that extremely nonlinear operation occurs during half of the alternating-current cycle. This half-cycle saturation of the transformer can lead to a variety of harmful effects on the power system and equipment.

The transformer exciting current can have extremely large peaks on the saturated half-cycle. This will greatly increase the transformer winding losses, thus overheating the unit, possibly damaging it. The highly asymmetrical exciting current is typically rich in odd and even harmonics. Injection of these harmonics into the system can overload

---

[1] Hector A. Landa is an Electrical Engineer, Electric Power Branch, Division of Research and Laboratory Services, Bureau of Reclamation, Denver, Colorado.
[2] Numbers in brackets refer to References at end of article.

equipment such as capacitor banks and filters, cause misoperation of protective relays, and damage motors and generators. As a result of the large half-cycle exciting current, the GIC-affected transformer can draw a tremendous amount of var's from the system. This will put more stress on a system that could be already overstressed.

All GIC-related power system failures are directly or indirectly related to transformer half-cycle saturation. The effect is more pronounced with single-phase transformers. They saturate more easily and to a much greater degree than comparable 3-phase units [3].

Which Power Systems Are in Jeopardy?

The GIC magnitude depends mainly on latitude and geological formations. Because the interaction between the magnetic field of the sun and the earth is greatest near the earth's magnetic poles, both the occurrence and magnitude of induced currents are greater at higher latitudes. Igneous rocks have a very high electrical resistivity; therefore, systems that are located on these types of formations are more prone to experience large currents.

Transmission line length and orientation are two other important factors in the magnitude of the induced currents. Longer lines will have greater difference of earth surface potential, resulting in greater induced currents. East-West oriented lines will also develop larger GIC.

Figure 1 shows the areas of igneous rock formations for the U.S. and Canada. In the same figure, the location and type of power system failures during the geomagnetic storm of March 13, 1989, are indicated. Notice the relationship between the number and seriousness of failures with latitude and igneous rock formations. In some of these high risk areas, more than 100 amperes have been measured in grounded power transformer neutrals. Keep in mind that in some instances just a few amperes of direct current are all that is needed to saturate a transformer [4].

What Can Be Done To lessen the Impact of GIC?

Because the GIC is, for all practical purposes, a direct current, a capacitor would block it. Work is being done to develop a device that will block the GIC at the transformer neutrals [5]. Another way of blocking the GIC is to install series capacitors in the three phases of the transmission line. This is an expensive but effective proposition, and the technology is proven and readily available.

Another solution would be to bypass the GIC from the main transformer windings. A relatively simple modification proposed is to bond the neutral points at each end of the line and at each tower to an extra "earth" conductor. While this modification will not completely eliminate the GIC through the transformer, it will greatly reduce it.

A different type of approach would be to take preventive measures when a geomagnetic disturbance is likely to occur. By altering operating practices, such as backing away from power transfers, reducing overall loading and leaving enough var reserve in the system to absorb the shock of SMD, the impact of GIC could be reduced. This approach would require some type of GIC warning system.

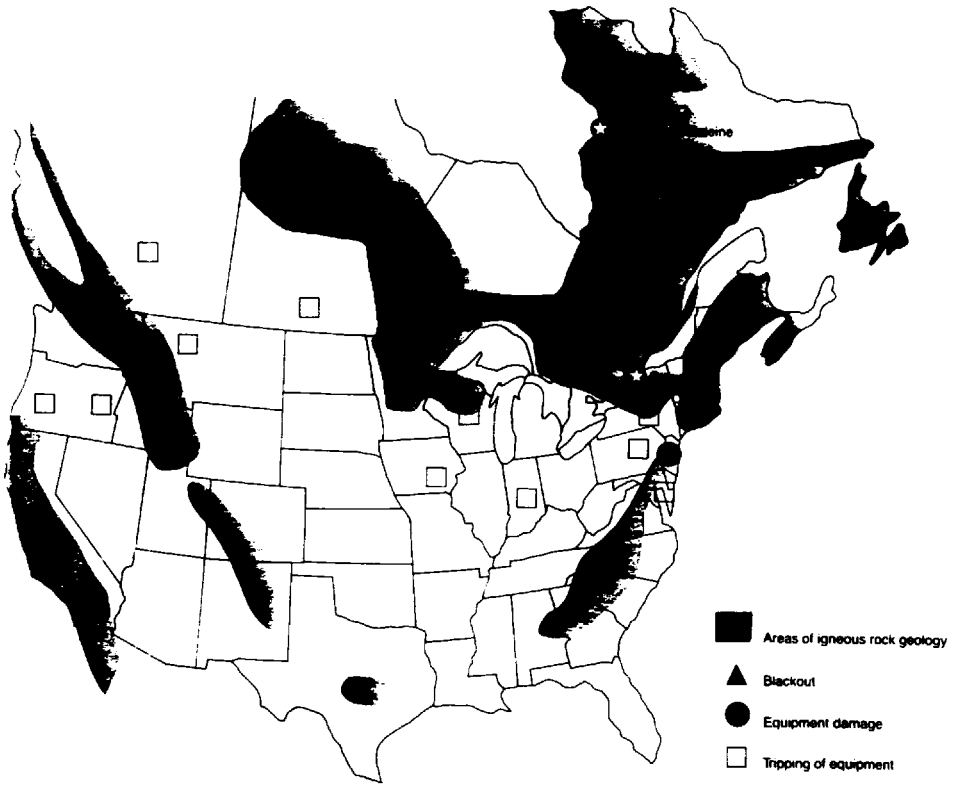

Figure 1. – Igneous rock distribution in U.S. and Canada and location of power system events during the solar storm of March 13, 1989. (Source: EPRI Journal, July/August 1989.)

The charged particles that produce the solar wind travel at 500 to 1000 km/s, taking them 2 to 4 days to reach the earth. An early warning system [6] calls for putting a satellite in an orbit between the sun and earth. This satellite would monitor the solar wind and give warning of critical changes before it reaches the earth. This proposition has the drawback of a relatively high cost.

Presently, the Space Environment Service Center (SESC) issues magnetic storm warnings. These warnings, by themselves, provide limited information on the effects of GIC on a particular system. Another system in operation simply measures the GIC, and when it reaches a predetermined value, a warning signal is produced. The problem with this type of low-cost system is that there is no indication of how a particular transformer, to say the least the system, is behaving. Warnings are based on general assumptions rather than on specific equipment information. With little or no additional expense, other specific parameters, such as harmonic distortion and transformer temperature rise, could be added to make this system much more effective.

What Is Reclamation Doing?

The Bureau of Reclamation recently developed an integrated GIC Monitoring System that measures the quasi-direct current in a power transformer grounded neutral, and the associated harmonic current and winding temperature rise. The equipment, illustrated in figure 2, consists of a very sensitive direct-current neutral shunt transducer, second

harmonic and phase current transducers, and winding hot spot and ambient temperature transducers in a self-contained package. A six-channel strip chart recorder (of which five channels are used) constantly collects the information from the transducers. Two programmable alarms are provided.

The GIC is measured by tapping the existing transformer neutral lead as shown in figure 3 during an actual installation. The small voltage drop in the conductor is fed into an alternating-current filter-amplifier circuit to produce a measure of the direct-current component. Clamp-on current transformers (CT) are used to measure the transformer neutral phase current. A current transducer monitors the load current. Information about the second harmonic phase current component is obtained with a specially designed harmonic current transducer. The winding temperature is monitored using an available resistance temperature detector (RTD) well. The ambient temperature transducer consists of a small probe that can be installed in any chosen location.

The second harmonic phase current signal provides information about the degree of saturation in the transformer, while the transformer winding temperature rise indicates the degree of danger to the equipment. Ambient temperature and load current information allow us to determine transformer temperature rise due to GIC and not some other operating condition. Additional information on the earth's magnetic field and storm magnitudes will be obtained from the SESC computers. By correlating this information with the quasi-direct current, we will be able to determine trip points and assess which solar storm magnitudes may be of concern at various installations.

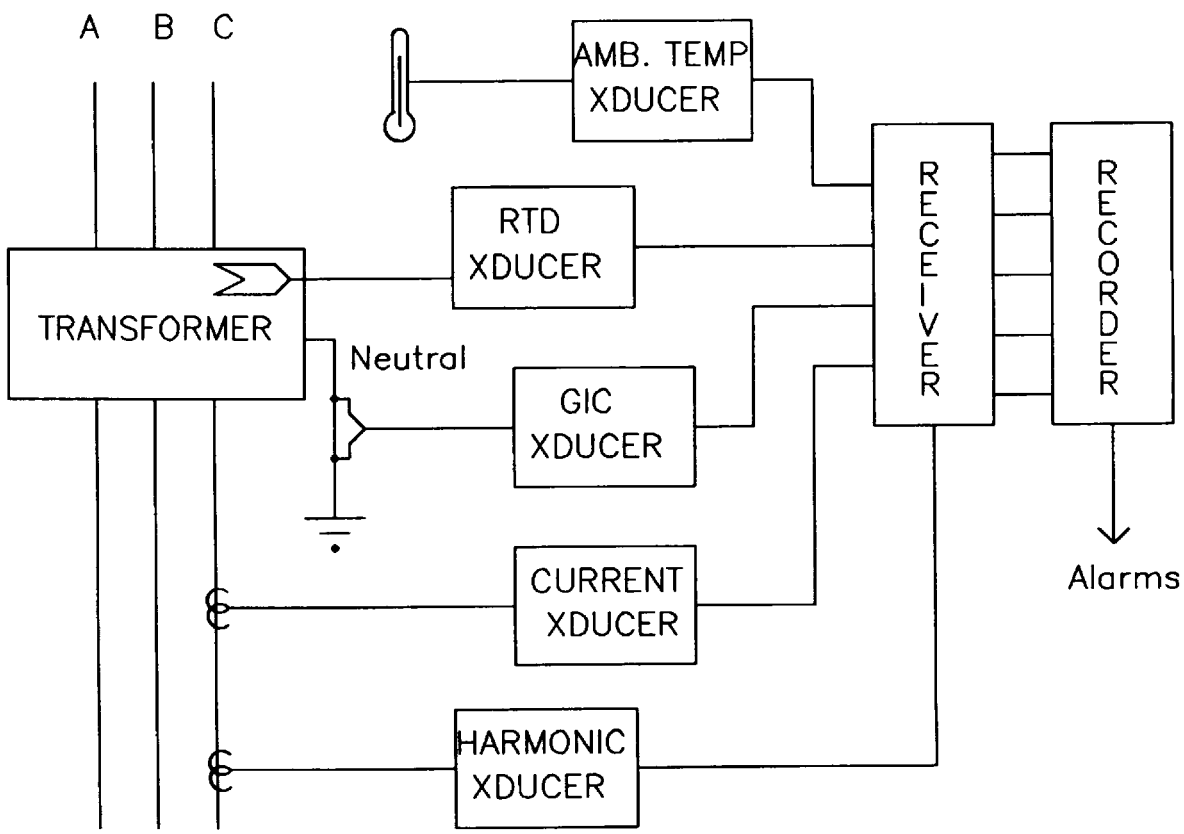

Figure 2. – USBR GIC Monitoring System.

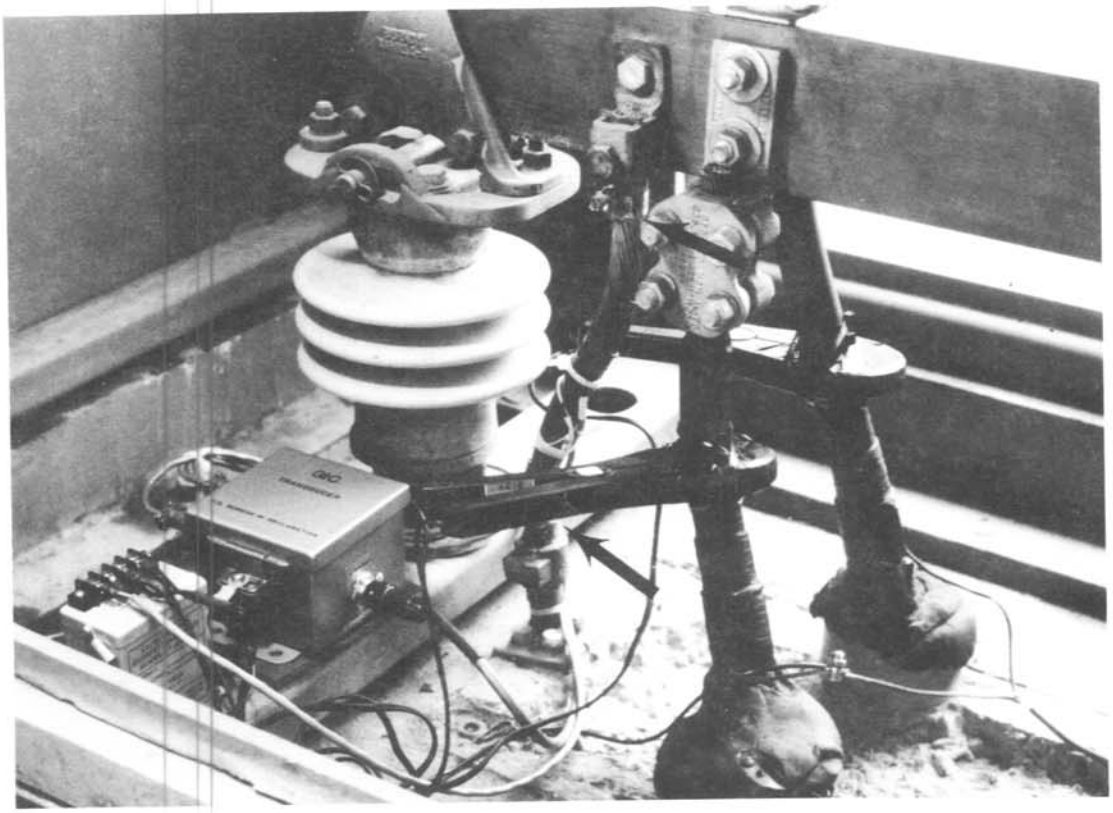

Figure 3. – Installation of the GIC transducer at Grand Coulee Powerplant.

Where Is Reclamation Now?

The first system was installed at Grand Coulee Powerplant on transformer K19A in April of this year (1991). Later in June, a second system was installed at Glen Canyon Powerplant on transformer K7A. The data have been collected and are now being studied to determine the severity of the GIC phenomena at these sites and to decide whether additional monitoring and/or preventive measures will be needed.

References

1. Kappenman, J. G. and V. D. Albertson, "Bracing for the Geomagnetic Storms," IEEE Spectrum, March 1990.

2. Barnes, P. R. and J. W. Van Dyke, "Potential Economic Costs From Geomagnetic-Storms," IEEE PES Summer Meeting, Transmission and Distribution Committee of the IEEE Power Engineering Society, July 1990.

3. McNutt, W. J., "The Effect of GIC on Power Transformers," IEEE PES Summer Meeting, Transmission and Distribution Committee of the IEEE Power Engineering Society, July 1990.

4. Kappenman, J. G., "Transformer DC Excitation Field Test & Results," IEEE PES Summer Meeting, PES Technical Council of the IEEE Power Engineering Society, July 1989.

5. Kappenman, J. G., B. L. Damsky, et al., "GIC Mitigation: A Neutral Blocking/By Pass Device to Prevent the Flow of GIC in Power Systems," IEEE PES Summer Meeting, Transmission and Distribution Committee of the IEEE Power Engineering Society, July 1990.

6. Kappenman, J. G, V. D. Albertson, B. L. Damsky, and J. D. Steinar, "Solar Wind Monitor Satellite Crucial for Geomagnetic Storm Warnings."

RECENT EXPERIENCE WITH EXCITATION SYSTEM UPGRADING IN HYDROELECTRIC POWERPLANTS

By J. C. Agee[1]

The Bureau of Reclamation has upgraded more than a dozen excitation systems at its hydroelectric facilities during the past 2 years. These upgrades have been accomplished on generating units ranging in size from 35 to 133 MVA. The upgrade process has usually been combined with Reclamation's generator uprating program. The scope of the excitation system upgrades has varied from replacement of only the voltage regulator and pilot exciter to complete replacement of the entire excitation system. Successful commissioning of this new equipment has required the combined effort of Reclamation personnel and representatives of the excitation equipment manufacturers.

The Electric Power Branch of the Research and Laboratory Services Division has spearheaded the commissioning effort for Reclamation through a Bureau-wide Excitation System Program. This program focuses on new and existing excitation systems and has the following objectives:

1. To ensure that the excitation control system (voltage regulator, pilot exciter, main exciter, generator, and local power system—including associated controls, limiters and protection) is functioning properly

2. To verify proper coordination of limiter and protective functions and demonstrate that they are operational

3. To improve voltage control for synchronizing and local or remote operation of the plant

4. To improve power system stability and reliability through optimum voltage regulator performance

5. To provide appropriate training for operation and maintenance personnel

6. To provide accurate data for power system computer simulations as required by the Western Systems Coordinating Council

The Electric Power Branch has been involved in analysis and alignment of excitation systems for almost 30 years. Initial efforts targeted development of supplementary excitation control systems to provide additional power system stabilization [1,2,3][2].

Later efforts aided development of fully static excitation systems for large hydroelectric generators [4]. More recently, the branch has established the Excitation System Program to provide alignment service for all functions of the excitation equipment. This is becoming increasingly important as manufacturers with little experience in power generation begin to supply excitation equipment.

---

[1] J. C. Agee is an Electrical Engineer, Electric Power Branch, Division of Research and Laboratory Services, Bureau of Reclamation, Denver, Colorado.
[2] Numbers in brackets refer to references at end of article.

Upgrade Options

Recent upgrades of excitation systems can be divided into two main categories. The first category involves retaining the existing rotating main exciter while the second replaces the entire excitation system with static components. Retaining the existing rotating main exciter results in lower initial hardware cost for the upgrade; however, many times additional costs are incurred during the commissioning tests. Problems and associated costs that have recently been encountered include incorrect commutator brush positioning, poorly lapped commutator segments, and incorrect field polarity. Correcting these problems has cost numerous staff days for the entire commissioning crew. These factors should be considered as a potential cost when a rotating exciter is to be retained. Fully static systems are typically tested in the manufacturer's plant as an overall system. This saves valuable time during the commissioning phase because troubleshooting effort is reduced. Systems employing rotating exciters can only be tested with the target generator.

Operation

There are three primary operational differences between systems that have rotating main exciters and fully static systems. The first difference is the speed of response (or bandwidth). Second, is the performance during a load rejection. The third major difference is the potential contribution to power system damping.

The response to a step input for a well-tuned system employing a rotating main exciter is shown in figure 1. The 10 to 90 percent rise time is 0.3 second and the overshoot averages 18 percent. A similar response for a fully static system is shown in figure 2. The rise time is 0.15 second and the overshoot is 5 percent. A fully static system is capable of even faster response than this; however, the response is normally detuned to this level due to system stability constraints.

The response of generator terminal voltage to a full load rejection performed on a generator with an excitation system that includes a rotating exciter is shown in figure 3. The voltage rise after the load rejection is 26 percent. The voltage remains above rated value for about 5 seconds. A similar load rejection performed on a generator with a fully static excitation system is shown in figure 4. The voltage rise is only 16 percent and lasts only a fraction of a second.

In addition, generators with fully static excitation systems have the potential to provide increased power system damping if they are equipped with power system stabilizers [5]. This factor will become more important as power system intertie loads increase.

Features

The features (limiters, backup controllers, protection, etc.) included with modern excitation system upgrades are normally the same regardless of the type of main exciter. Reclamation usually specifies an automatic voltage regulator controller that includes volts/hertz (underfrequency) limiting, overexcitation limiting, underexcitation limiting, and reactive current compensation. These features make it almost impossible to operate the generator outside of its capability. This is an important consideration for remotely controlled plants that are subject to computer and communication system failures. Reclamation also

specifies a backup regulator which controls either generator field current or generator field voltage. Power system stabilizers are included on all generators rated at more than 50 MVA.

Typical protection specified with the excitation system includes a volts/hertz relay, generator and exciter overvoltage relays, a loss-of-field relay, and exciter input overcurrent relays. Other specified features include motor-operated or digital setpoint adjusters for both the automatic voltage regulator and the backup controller, an automatic setpoint tracking system for the backup controller, and an automatic transfer scheme should a failure of the automatic voltage regulator occur. All of these functions are tested during a typical excitation commissioning test.

Conclusions

Upgraded excitation systems have been installed on many Bureau of Reclamation generators during the past 2 years. Improved limiters and operational features have been included in these systems. New fully static systems have provided better performance and have required less troubleshooting during commissioning. Therefore, fully static systems should be considered when excitation system upgrades are planned.

For more information about Reclamation's Excitation System Program write to the Chief, Electric Power Branch, Code D-3770, PO Box 25007, Denver, Colorado 80225, or telephone (303) 236-6047 or FTS 776-6047.

References 6-8 contain more specific information about several recent commissioning tests.

References

1. Schleif, F. R. and G. E. Martin, "Influence of Excitation Control upon Powerline Stability—An Analog Study," Report No. EP-16, Electric Power Branch, Division of Research, Bureau of Reclamation, U.S. Department of the Interior, May 1966.

2. Schleif, F. R. and W. B. Gish, "Excitation Supplementary Control by a Multiloop System for Confinement of Parameter Variations," Report No. EP-25, Electric Power Branch, Division of Research, Bureau of Reclamation, U.S. Department of the Interior, April 1968.

3. Schleif, F. R. and W. B. Gish, "Pilot Application of Excitation Supplementary Control—Yellowtail Powerplant," Report No. EP-26, Electric Power Branch, Division of Research, Bureau of Reclamation, U.S. Department of the Interior, August 1968.

4. Eilts, L. E., W. B. Gish, and F. R. Schleif, "Power System Stabilization with High Initial Response Excitation on Large Hydroelectric Generators," Report REC-ERC-72-18, Electric Power Branch, Division of General Research, Bureau of Reclamation, U.S. Department of the Interior, June 1972.

5. Kundur, P., M. Klein, G. J. Rogers, and M. S. Zywno, "Application of Power System Stabilizers for Enhancement of Overall System Stability," IEEE Transactions on Power Systems, Vol. 4, pp. 614-626, May 1989.

6. Vu, Hoa D., "Hoover Unit A6 Excitation System Commissioning Test," Report R-89-08, Electric Power Branch, Research and Laboratory Services Division, Bureau of Reclamation, U.S. Department of the Interior, September 1989.

7. Agee, J. C., "Flatiron Powerplant Automatic Voltage Regulator Performance," Report R-89-16, Electric Power Branch, Research and Laboratory Services Division, Bureau of Reclamation, U.S. Department of the Interior, October 1989.

8. Agee, J. C. and G. K. Girgis, "Keswick Powerplant Unit 1 Excitation System Commissioning," Report R-90-21, Electric Power Branch, Research and Laboratory Services Division, Bureau of Reclamation, U.S. Department of the Interior, December 1990.

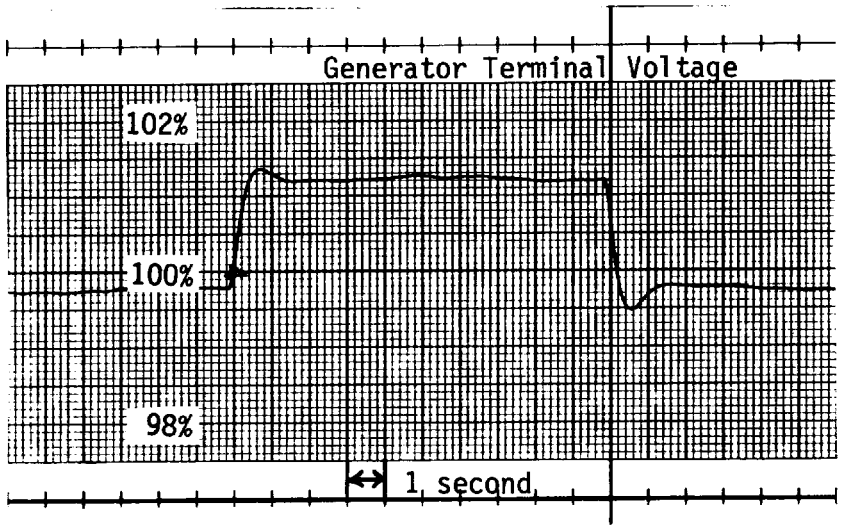

Figure 1

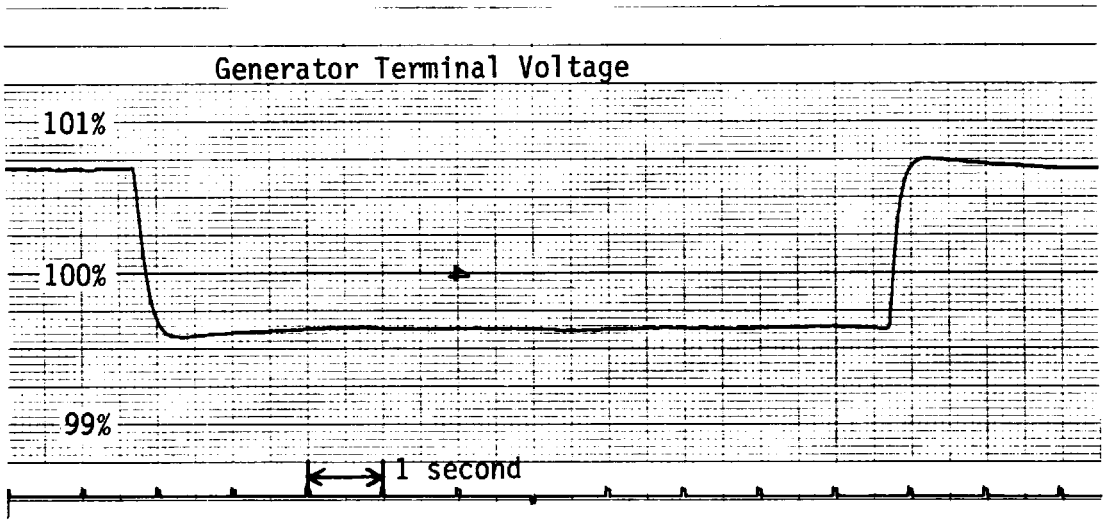

Figure 2

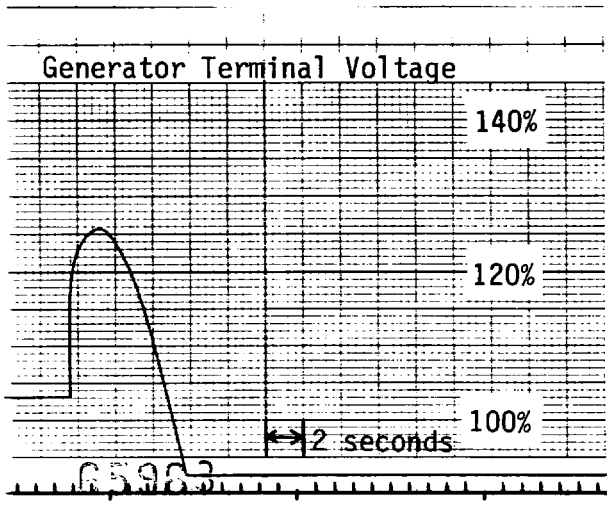

Figure 3

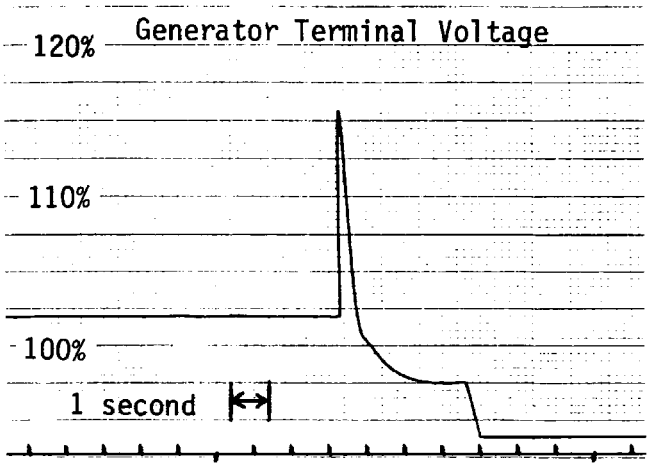

Figure 4

INTAKE TOWER REPLACEMENT FOR BUMPING LAKE DAM

By Thomas E. Hepler[1]

Background

The oldest of six storage dams serving the Bureau of Reclamation's Yakima Project, Bumping Lake Dam was constructed at the lower end of a natural lake on the Bumping River in south-central Washington. The Yakima Project provides irrigation water for nearly one-half million acres of fertile land within one of the richest agricultural areas in the nation, extending 175 miles along the Yakima River southeast of Seattle. Located within the Snoqualmie National Forest and in the shadow of Mount Rainier, Bumping Lake provides 33,700 acre-feet of active storage for irrigation, fish, and recreation benefits. The coniferous forests and rugged mountain terrain which surround the 1,300-acre reservoir provide a magnificent setting for camping, boating, and fishing.

Bumping Lake Dam outlet works intake tower.

Completed in 1910, the dam embankment is a hydraulic fill structure with a puddled core, having a maximum height above streambed of 45 feet and a crest length of 3,425 feet

[1] Thomas E. Hepler is a Civil Engineer employed in the Concrete Dams Branch, Bureau of Reclamation, Denver, Colorado.

at elevation 3435. A concrete overflow spillway was constructed at the dam's left abutment for passage of floods. An outlet works conduit was located near the maximum section of the dam, with flow regulation provided at the upstream end by guard and regulating gates within an intake tower. Reservoir releases pass through the intake tower, an 86-inch-diameter reinforced concrete conduit, and a downstream concrete-lined channel before entering the Bumping River.

The existing intake tower is 48 feet high and constructed of reinforced concrete. The tower contains four 5- by 5-foot cast iron slide gates within a wet-well configuration, with trashracks provided on the upstream face. A timber and corrugated metal building atop the tower contains the slide gate hoists and gasoline-engine operating system, and reservoir level gauge equipment. Access to the tower is provided by a 116-foot-long footbridge from the dam crest. The intake tower has been modified and repaired numerous times since its original construction, including significant concrete repairs to eroded areas within the structure at the base and conduit transition, the addition of a concrete overlay to the outside walls, and trashrack modifications. After 80 years of service, the upstream guard gates can no longer close under reservoir head due to the condition of the mechanical equipment and separation of the concrete deck from the supporting tower when force is applied to the gate stems. The left regulating gate vibrates severely at gate openings greater than 3.5 feet due to the formation of a hydraulic jump within the downstream transition and resulting control shift to the downstream conduit. Air flow rates were estimated to drop from about 130 ft^3/s to less than 10 ft^3/s as a result of the control shift and change from free to pressure flow conditions. During normal operations, small birds have been held against the existing 18-inch-square screened air inlets. Although the discharge capacity of the outlet works is 1,300 ft^3/s at the top of active conservation capacity, elevation 3426, an operating restriction of 500 ft^3/s is in effect as a result of the gate vibrations. Considering the many structural problems and operating restrictions, modifications to the outlet works were deemed necessary.

Modification Alternatives

The outlet works modification alternatives evaluated consisted of upstream and downstream control options utilizing the existing conduit. Field investigations of the existing intake tower indicated moderate deterioration of the concrete to depths of 6 inches due to freeze-thaw, further erosional damage near the regulating gates, and the structural separation of the deck previously noted. With these extensive problems, along with concerns for the dynamic stability of the structure during an earthquake, removal of the existing intake tower was included for all options. All downstream control options included the addition of a steel liner within the existing conduit as a precaution against potential failure of the conduit under sustained pressure flow conditions. The upstream control options included guard and regulating gates within a new tower at the upstream end, while the downstream control options included regulating gates at the downstream end and guard gates at either end. Upstream control was selected for final design based on lower design and construction costs, and greater potential discharge capacity.

Intake Tower Design

The Bureau of Reclamation prepared design specifications in 1990 for replacement of the existing intake tower with a new structure. The new intake tower will consist of a double wet-well structure containing two 54- by 60-inch cast iron slide gates for regulating releases. The reduced width of the gates from those currently in use will

permit a slightly narrower tower without a reduction in the maximum discharge capacity, due to the limitation of the downstream conduit for larger gate openings. The minimum allowable gate opening of 2 inches will be sufficient for passage of the minimum streamflow release requirement of 50 ft^3/s under the maximum reservoir head of 37 feet. Two 54- by 60-inch guard gates will be provided on the upstream face of the tower for emergency closure and inspection purposes. Four electric motor hoists, each with manual operating capability, will be provided on the tower deck for operation of the gates. Large formed air vents extending above the normal water surface will be provided downstream of the regulating gates to meet the air demands of the gates and of the downstream conduit during operation. A new square-to-round transition will be constructed from the tower to match the upstream end of the existing conduit. A square trashrack structure will be located at the upstream intake openings, designed for normal flow-through velocities below 2 ft/s and maximum velocities under 3.5 ft/s. Due to the shallow reservoir and normal lake level fluctuations, the trashrack structure will be frequently accessible for cleaning, as necessary. Reservoir levels will be recorded from an 18-inch-diameter vertical well on the right side of the tower. Small concrete fins were added to the upstream face on either side of each guard gate stem for protection of the stems from ice and floating debris. Small (3/4-inch) copper pipes will be embedded in the tower concrete from the deck to outlets just above each guard gate for a potential future bubbler system, in the event ice formation at the gates becomes a problem. Details of the new intake tower are shown on figure 1.

A reinforced concrete control house will be constructed on the tower deck for protection of the operating equipment from weather and vandalism. Wall offsets and a rib-formed texture will improve the appearance of the structure. Roof hatches will permit removal of the two regulating gates and the four gate hoists from the tower using a mobile crane positioned on the dam crest. Removal of the two guard gates from the upstream face of the tower, if necessary, will require the use of divers and a barge-mounted crane. A propane-powered, 12.5-kW engine-generator will be located within a concrete house on the dam crest to provide electric power for the gates and for lighting, since electric power is not currently available at the site. The dam crest will be widened on the upstream face to accommodate the engine-generator house and a buried propane

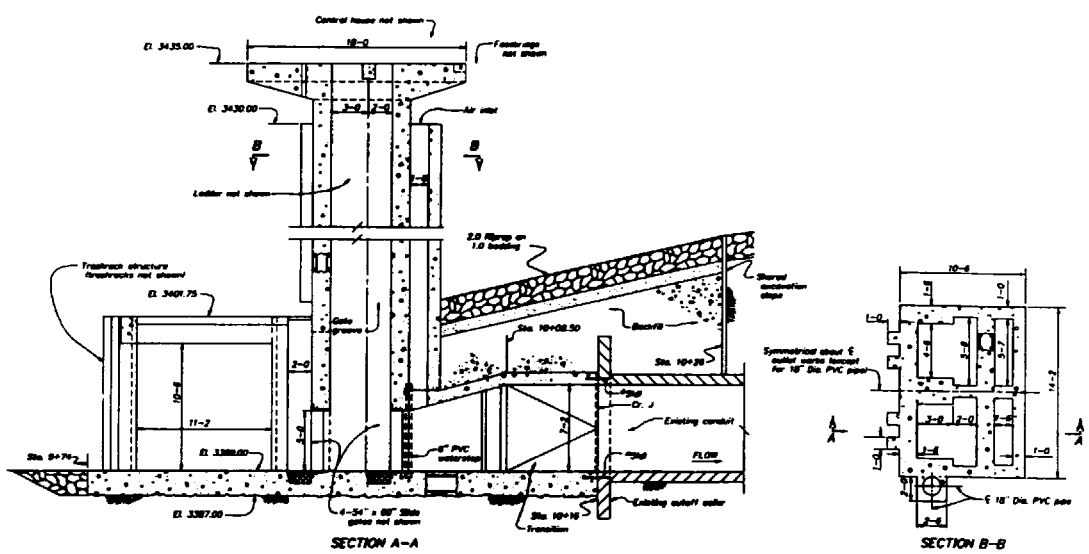

FIGURE 1. – PROFILE AND SECTION OF NEW INTAKE TOWER

tank. Access from the dam crest to the intake tower and control house will utilize the existing steel footbridge, which will be removed during tower construction and reinstalled upon completion.

The new intake tower was designed for an unwatered inspection condition under full reservoir head, and for an earthquake loading resulting from the estimated 10,000-year random event having a magnitude of M_L 5.5 at 9 km.

The 10,000-year event was selected for design based on a risk analysis, with an assumed tower replacement cost of $2 million and lost reservoir benefits in the event of failure of $1 million. Ground motions for the dynamic analysis of the tower were modeled with historic records of earthquakes having similar response spectrums to that expected for the design event. Design moments and shears for the earthquake loading were computed by a three-dimensional finite element analysis of the tower using the SAPIV computer program. The dynamic overturning stability of the tower was checked with pseudostatic methods, with a peak horizontal acceleration of 0.26 g (gravity) used to compute a seismic force distribution and with the surrounding reservoir modeled as an added mass varying with depth. The resulting base slab is roughly octagonal with a maximum dimension of 36 feet and a thickness of 2 feet. Maximum foundation pressures on the glacial drift were kept below 3 tons/ft^2. The base slab and tower deck were analyzed as flat plates subjected to design loads. Concrete and reinforcement designs for the intake tower were prepared with service loads and the Alternate Design Method of the ACI Building Code, with concrete compressive strengths of 3,000 lb/in^2 at 7 days for construction loads, and 4,000 lb/in^2 at 28 days for normal operating, inspection, and earthquake loads. Allowable working stresses were increased by one-third for earthquake loads. Structural designs for the control and engine-generator houses were prepared with the Strength Design Method and factored loads.

Diversion During Construction

Over one-half of the total construction cost is associated with costs for diversion during construction, including construction of an upstream cofferdam and a temporary diversion pipeline. The specifications provide minimum design requirements for a cofferdam and include a designers' proposed embankment cofferdam design with borrow areas identified for the necessary backfill and slope protection materials. The lower, upstream portion of the cofferdam will be constructed under water, after reservoir drawdown. The construction dewatering plan and implementation will be the responsibility of the contractor.

To maintain reservoir release capability throughout construction for minimum streamflow and flood diversion requirements, a 48-inch-diameter steel pipe will be constructed beneath the cofferdam near the south (right) abutment, for discharge into the existing outlet works conduit downstream from the tower construction. A small concrete intake structure at the cofferdam toe will include a manually operated 48-inch-diameter slide gate for flow regulation, and a single trashrack for collection of debris. The gate stem and 6-inch air vent pipe will extend from the slide gate to the cofferdam crest. The diversion pipe will be backfilled within a shored trench along the dam's upstream face, with concrete pipe bedding beneath the cofferdam crest for seepage control. The cofferdam crest elevation of 3415 feet will be sufficient for passage of normal flows from October to March, plus the estimated 2-year flood for that period, with a minimum freeboard of 3 feet.

Installation of a steel cover plate within the existing conduit, followed by concrete removal and pipe installation from outside the conduit to the plate surface, will minimize interruption of reservoir releases. A concrete thrust block will be constructed outside the existing conduit to carry any resulting loads during operation, thus avoiding potential damage to the lightly reinforced conduit section. Details of the diversion pipeline and thrust block at the existing conduit are shown on figure 2.

The contractor will be required to pump the minimum streamflow release of 50 ft^3/s from the reservoir to the Bumping River during three closure periods, for (1) installation of the cover plate, (2) installation of the 90° diversion pipe bend, and (3) removal of the pipe bend and replacement of the cover plate. A temporary bulkhead within the conduit will separate diversion flows from the tower construction. Following completion of the intake tower construction and removal of the diversion pipe bend from within the conduit, the diversion cofferdam will be breached and normal operation of the outlet works will resume. The remaining portions of the diversion pipeline and the portions of the cofferdam below the reservoir level and outside the approach channel will be abandoned for removal at a later date.

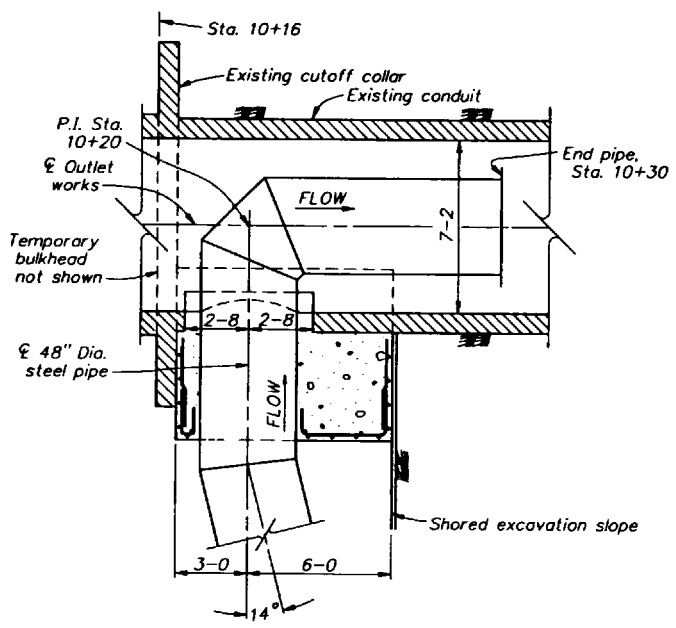

FIGURE 2. – SECTIONAL PLAN OF DIVERSION PIPELINE AND THRUST BLOCK

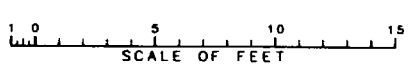

Spillway Repairs

The existing spillway consists of a 235-foot-long concrete overflow crest at the left abutment of the dam, with a grouted riprap approach apron and a steep 6-foot drop to a concrete-lined chute. The spillway chute converges from a width of 235 feet to 42 feet on about a 3.4 percent slope, before passing beneath an existing bridge and terminating with a timber flume for releases to the Bumping River below.

The spillway floor slabs are generally 10 feet square and 10 inches thick, with transverse expansion joints and small footings spaced on 50-foot centers. The slabs are founded on glacial drift, without anchors or underdrains. Numerous random cracks and open joints with differential displacements are evident. Some joints are open up to 2 inches wide the full depth of the slab, with vertical offsets up to 1/2 inch. The existing chute contains rocks and debris near the crest, and the sidewalls show significant cracking and deterioration.

Complete removal and reconstruction of the spillway is expected under future dam safety modifications to handle the probable maximum flood (PMF). In the meantime, temporary repairs will be made to the existing spillway to reduce the potential for failure. The existing open joints with vertical offsets within the chute can produce significant uplift pressures beneath the floor slabs during spillway releases, resulting in potential loss of the slabs and erosion of the glacial foundation. From hydraulic model studies, a 1/2-inch vertical offset at a 1/8-inch open joint was found to produce uplift pressures up to 55 percent of the mean velocity head for a 20-ft/s flow. The resulting uplift pressures are reduced by smaller vertical offsets and by larger joint widths. The floor slabs most susceptible to uplift failure during operation are those near the crest, where the combination of high velocity and shallow flow depth would produce the greatest potential net uplift pressure. This failure potential decreases with increasing flow depth along the converging chute. Open joints and cracks within 20 feet of the overflow crest will be cleaned and sealed for protection against slab failure for flows up to 1,000 ft^3/s, at a cost of under $15,000. A self-leveling elastomeric sealant will be used over polyethylene foam backup material. Vertical offsets greater than 1/4 inch will be ground to a 1:1 bevel. These repairs will reduce the estimated failure potential of the existing spillway to less than 3 percent per year.

Construction Schedule

A contract has been awarded to Constructors-PAMCO of Seattle, Washington to perform the modification work for under $2 million. The cast iron slide gates, frames, and hoists for the intake tower and diversion pipeline were purchased under a separate contract with Waterman Industries Inc. and have been delivered to the Bureau of Reclamation's Yakima Project Office. Completion of the spillway repairs is anticipated by this fall, with construction of the diversion pipeline and cofferdam after reservoir drawdown in October 1991. Intake tower construction must be performed during the winter months (between irrigation seasons), and completed prior to the spring snowmelt runoff. With average temperatures below freezing from November to March, and average snowfall depths approaching 5 feet in January, special considerations will be required for concrete placements and snow removal. Completion of the modification work is planned for April 1992.

PERSONAL COMPUTER MAINTENANCE MANAGEMENT SYSTEM

Bureau of Reclamation—1991

By memorandum dated January 18, 1984, the Commissioner directed all regional and project offices to initiate implementation of POMMS (Project Operation Maintenance Management System) in 1984. A task group was established to evaluate the program for use on irrigation projects and establish guidelines to be used by regional and project offices. It was the conclusion of the task group that POMMS was too complex, and in many cases uneconomical, for use in some of the smaller, single-purpose irrigation projects, and that a simple system should be established that may be easily adapted to the POMMS system at a later date. As a result, it was recommended that a manual MMS (maintenance management system), such as a 52-week file with a work order system, be developed for use on irrigation projects. A sample MMS was developed and tested by the task group. These computer programs were developed on PC (personal computer) using the basics of the 52-week system in a user-friendly software package.

The advantages of using an MMS have been stated in various documents. The advantages of using computers also have been substantiated. This package of computer programs uses a data base management system to keep track of work items cataloged by an identification code. A work item can be any task such as an examination, maintenance, repair, or an operation.

The filing system is based on the 52-week filing system but uses the resources of the computer system to employ any timeframe the user wishes. The automatic timeframe is 1 week for generating the main work order printout, but the user can change the time window to any desired timeframe. For instance, if you wanted to see the work orders for the next month, you would establish a 1-month timeframe.

The program tracks labor hours and costs and material costs of work completed and projected. Reports are available which tabulate and summarize costs and hours of labor. Thirteen reports of various items are available. The system is entirely menu driven.

The programs are available in dBASE IV and Foxpro. The Foxpro version does require the user to own a copy of Foxpro. Owners of dBASE IV or Foxpro can edit the data files directly or generate customized reports.

These software were developed to implement the 52-week filing system on a PC. Larger districts interested in inventory control and other more sophisticated tools should consider one of the numerous commercially available products that are available. Listings of these products can be found in "Equipment Maintenance & Field Service" and "Plant Engineering" magazines and other publications.

The PC MMS can be obtained by writing to Dave King, Bureau of Reclamation, Code D-5210, PO Box 25007, Denver CO 80225; or telephone (303) 236-8322.

The following two articles are project enhancement examples under Reclamation's "Enhancement of Existing Project Operations" initiative. This initiative is a top priority within Reclamation and has the full support of the Commissioner and the Permanent Management Committee. The initiative is based on the premise that better use of existing facilities can economically satisfy a portion of the need for additional uses of water and power. By sharing such examples of enhancement, it is felt that additional enhancement creativity may be stimulated.

WATER BANKING

MINIDOKA-PALISADES AND BOISE PROJECTS[1]

Introduction

The Pacific Northwest has two functioning waterbanks, one within the Minidoka-Palisades Project on the Upper Snake River, and the other within Arrowrock Division of the Boise Project on the Boise River (both in Idaho).

The Upper Snake waterbank has existed in some form since the 1930's, and since 1980 has been formally recognized by Idaho State Law and regulation. The Boise River waterbank began in 1988 with State and Reclamation approval.

Jackson Lake Dam, near the headwaters of the Snake River in Wyoming, was the first major storage reservoir constructed in the Upper Snake area. Lower on the Snake, American Falls Dam followed, then Island Park and Grassy Lake Dams on the Henry's Fork of the Snake to serve the northern and eastern parts of the project.

These developments were in place by the end of the 1930's. Some of the storage was committed to develop new lands, but the bulk of the storage was used to supplement the supply of water to existing irrigated lands with inadequate natural flow. In 1951, Palisades Dam was initiated to also supply supplemental water to the lands in the Upper Snake area.

Development of the Arrowrock Division of the Boise Project began with construction of Arrowrock Dam in 1911-15, built to provide water primarily for new irrigated lands. Arrowrock proved insufficient to meet the identified needs, and dry periods of the 1930's brought urgent appeals for more storage.

Anderson Ranch Dam was authorized in 1940 and completed in 1950. Anderson Ranch Reservoir added no additional irrigated land to the area. Further downstream, the Corps of Engineers subsequently constructed Lucky Peak Reservoir mainly for flood control. Part of the storage space in Lucky Peak was also marketed to augment the water supplies of existing irrigators.

Water Allocations

On both projects, all of the water supply was marketed under "spaceholder contracts." That is, Reclamation sold each contractor a share of the reservoir space. In some cases,

[1] Extracted, in part, from the Bureau's "Guidebook for Enhancement of Existing Project Operations," October 1990.

carryover storage rights were also granted, meaning that spaceholders could retain unused stored water from one year to the next.

The use of spaceholder contracts creates a major difference in how Reclamation can respond to changing water supply conditions and needs. Under such contracts, actual reservoir storage is attributed to the specific contractors. In years of normal or surplus supply, unneeded water simply remains in the reservoir under the control of the spaceholder. On projects where Reclamation simply promises to meet contractor needs, surplus water can be marketed to other users as long as Reclamation assures that the water supply needs of existing contractors can still be met.

Water transferring has functioned within the Upper Snake for many years. During construction of Palisades Reservoir, it was widely accepted that surplus storage would often exist due to the supplemental nature of the new storage. Repayment contracts therefore provided that the reservoir spaceholders could rent water to others. Water may be rented for 1 year at a time under a controlled price.

Waterbank Development

In 1979, due largely to concerns that State law could be interpreted to cause forfeiture of a water right if water is leased to others, the Idaho State legislature officially authorized the establishment of such "waterbanks" throughout the State.

As a result of dry conditions in 1987, a Boise River waterbank was proposed during the spring of 1988. With the support and encouragement of Reclamation and Idaho Department of Water Resources, Boise water users responded favorably to the waterbank concept; and the Idaho Water Resources Board established the Boise River waterbank on May 24, 1988. The rules and regulations for the new waterbank were patterned after those of the Upper Snake waterbank.

The two banks are similar in many respects. Each bank is managed by a local watermaster under the direction and advice of a committee of local irrigators. Only "stored water" can be traded in the two banks. Stored water has advantages over "natural flow" for water banking since the trading of natural flow invokes the State law requirement that impacts to third parties be evaluated. Such evaluation can be a rather imposing task for short-term changes of use.

Idaho State law does not require an analysis of third party impacts for changes involving only stored water. Indeed, if a noncontracting party claims potential harm from the change in diversion or use of stored water, the reservoir has probably found a new customer who should be paying for the benefits received. The waterbanks are open only to districts or individual diverters. Water transfers within districts still occur, but do so outside the waterbank framework.

In the vernacular of the waterbank, sellers are termed lessors; and buyers are lessees. The watermaster retains a percentage of rental cost per acre-foot for system improvements that provide common benefits to water users, such as improved measuring devices and hydromet facilities. The rates are set by local waterbank committees in an attempt to set a price that is fair to both buyer and seller.

Water committed to the bank by July 1 is placed into a common pool. The lessors who commit water to the bank by the July 1 deadline share proportionately in the proceeds from the bank.

At the urging of State and other interested parties, Reclamation has offered contract amendments to all spaceholders allowing them to lease their space for up to 20 years with the recognition that Reclamation requirements associated with irrigation use will follow the water, including irrigability requirements and acreage limitation. At the present time, no specific long-term lessees have been identified.

For further information, contact the Project Superintendent, Central Snake Projects Office, 214 Broadway, Boise, Idaho 83702, telephone (208) 384-1460 (FTS 554-1460); and/or the Project Superintendent, Minidoka Project Office, 1359 Hansen Avenue, Burley, Idaho 83318, telephone (208) 678-0461 (FTS 554-6631).

WATER CONSERVATION PROGRAM

CASPER-ALCOVA IRRIGATION DISTRICT AND CITY OF CASPER[1]

The City of Casper, Wyoming, needed to develop additional municipal water supplies to meet future needs, and the Casper-Alcova Irrigation District was faced with costly system improvements to its aging distribution system. These entities executed contracts with the United States whereby the City paid their construction obligation and also for improvements to the District's delivery system in return for up to 7,000 acre-feet of municipal water annually from the Kendrick Project.

The Kendrick Project was authorized by the finding of feasibility approved by the President on August 30, 1935. The Project provides irrigation water to approximately 24,000 acres of District lands along the North Platte River in central Wyoming as well as hydroelectric power and fish, wildlife, and recreation benefits. The principal water storage features, Alcova Dam and Reservoir and Seminoe Dam and Reservoir, were completed in 1938 and 1939, respectively. The first irrigation water was delivered to the District in 1946.

Growth had already strained the City's limited water resources and forced it to look for new sources to meet projected municipal demands. Until 1970, the City had relied on ground water to meet its demands. Its recently acquired permit allowing diversions from the North Platte River was relatively junior and, without storage, was vulnerable to other senior irrigation and storage rights. A subsequent study of alternative sources for future water needs concluded that the Kendrick Project could provide the needed storage and regulation of water for the City. At the same time, the District was faced with the costly rehabilitation of its aging water distribution system. There were substantial seepage losses along the District's 59-mile canal and 190-mile lateral system.

When the City approached the District to purchase a portion of its irrigation water supply, the District indicated it was not willing to sell its water outright. Instead, the District offered the City a proposition whereby the City would fund conservation improvements to the District distribution system and in return the City could save water. An engineering evaluation determined a second water supply of up to 7,000 acre-feet annually could be developed through conservation, and recommended the City fund a system improvement program consisting of lining portions of the District's main canal improving laterals.

The City, District, and United States entered into a contractual arrangement in 1982 whereby the City agreed to fund the system improvement program, pay the District's remaining construction obligation, pay an annual water service charge, and pay a proportionate share to the annual operation, maintenance, and replacement costs of the Kendrick Project. In return the City would receive an annual water supply of up to 7,000 acre-feet annually based on the water saved through the conservation program. The conservation program is scheduled to be completed over a 15-year period ending in 1996.

The United States has received advance payment of the District's obligation and additional revenues from the annual water service and operation, maintenance, and replacement

[1] Extracted, in part, from the Bureau's "Guidebook for Enhancement of Existing Project Operations," October 1990.

charges. The District has been relieved of its repayment obligation and gets an improved, more efficient distribution system virtually without cost. The City will now have a firm supplemental municipal water supply. In addition, 5 of the 27 seeped areas along the distribution system will be preserved for wetland habitat.

For further information, contact the Regional Supervisor of Water, Land, and Power; 316 North 26th Street; Billings, Montana 59101; telephone (406) 657-6411 (FTS 585-6411).

Kendrick Project

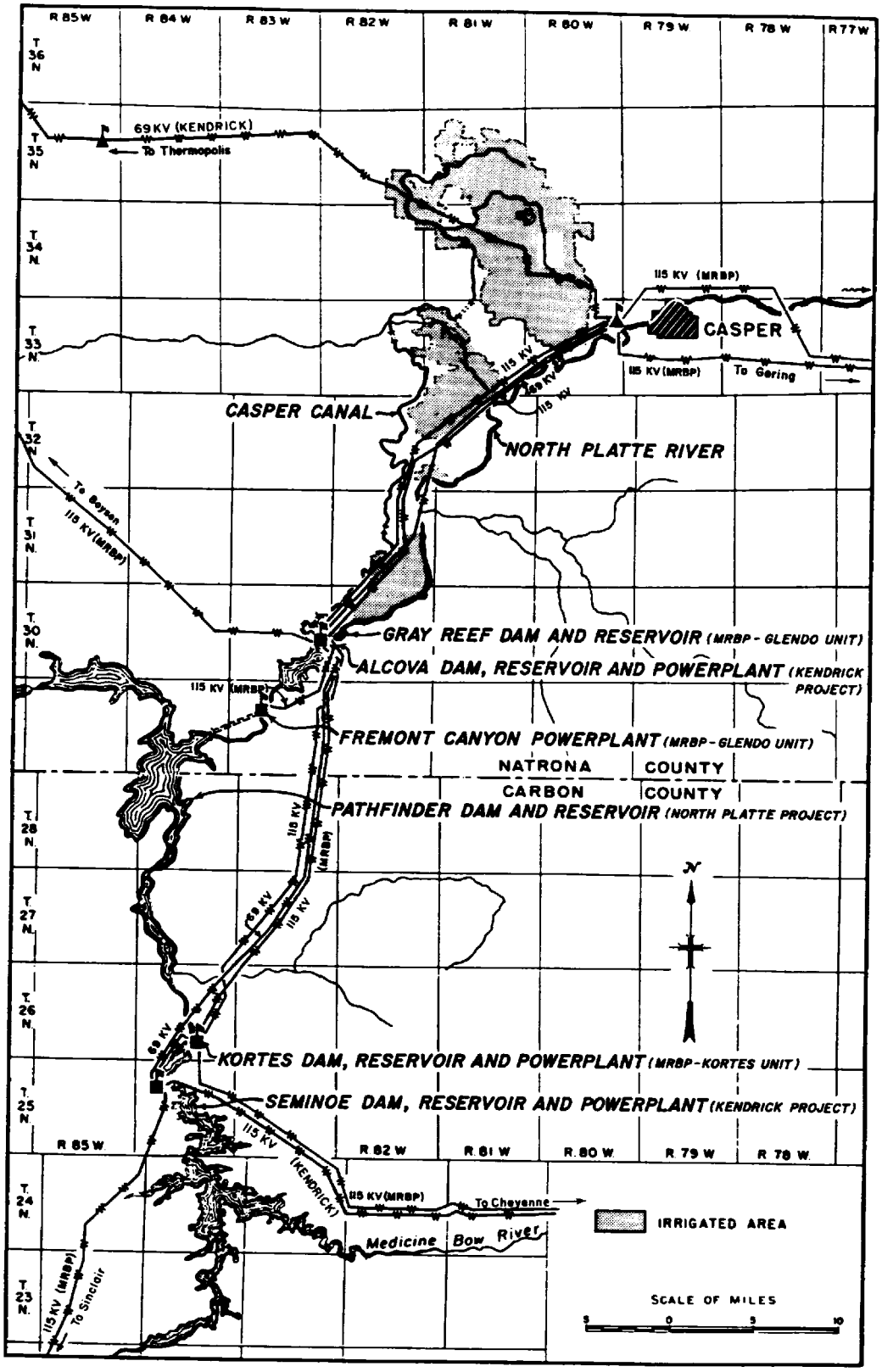

Kendrick Project

SAVAGE RAPIDS DIVERSION DAM

Savage Rapids Diversion Dam, Grants Pass Project, Oregon, was completed in 1921 by private irrigators. In 1949, the Bureau of Reclamation was requested to replace the old suspension pipeline and siphon with a new buried line under the Rogue River. Several years later, Reclamation was asked to rehabilitate the Dam. After thorough investigations, both requests were undertaken and completed in 1955. In 1974, the Bureau of Reclamation and Bureau of Sport Fisheries and Wildlife investigated and prepared a report on anadromous fish passage improvements at the Dam. Fish ladders are located at each abutment of the dam.

The Dam is on the Rogue River 5 miles east of Grants Pass, Oregon. It is about 456 feet long and consists of a 16-bay spillway section and a hydraulic-driven pumping plant section at the right abutment. Maximum height of the spillway section is about 39 feet. The first seven bays at the right end of the dam are multiple arches with buttresses on 25-foot centers; the remaining nine bays have a concrete gravity section below the gates. Spillway control was originally provided by 16 wooden-faced radial gates, each 23 feet wide and 10 feet high. During rehabilitation, the radial gates were replaced with metal stoplogs, and one double-gated river outlet with a capacity of 6,000 ft^3/s was installed at the center of the dam. The metal stoplogs are placed and removed by a motorized overhead cableway and hoist. During the irrigation season, the stoplogs are used to raise the upstream diversion pool an additional 11 feet.

The Dam diverts water from the Rogue River by gravity into the South Main Canal to serve the lowlands on the south side of the river. The main pumping plant lifts water from the reservoir to the Tokay Canal to serve lands on the north side of the river, and to the South Highline Canal to irrigate lands above the South Main Canal. The right turbine drives two pumps in series which lift water 150 feet to the Tokay Canal. The left turbine drives one pump which lifts water 90 feet to the South Highline Canal. There are also four lateral relift pumping plants along the canals.

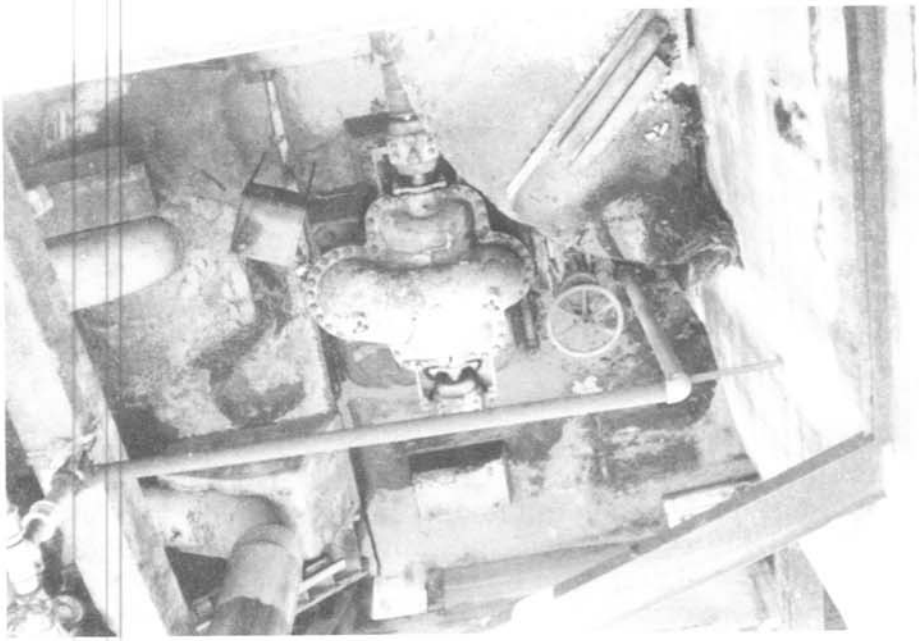

Savage Rapids Diversion Dam. Left pump turbine unit. 7/91

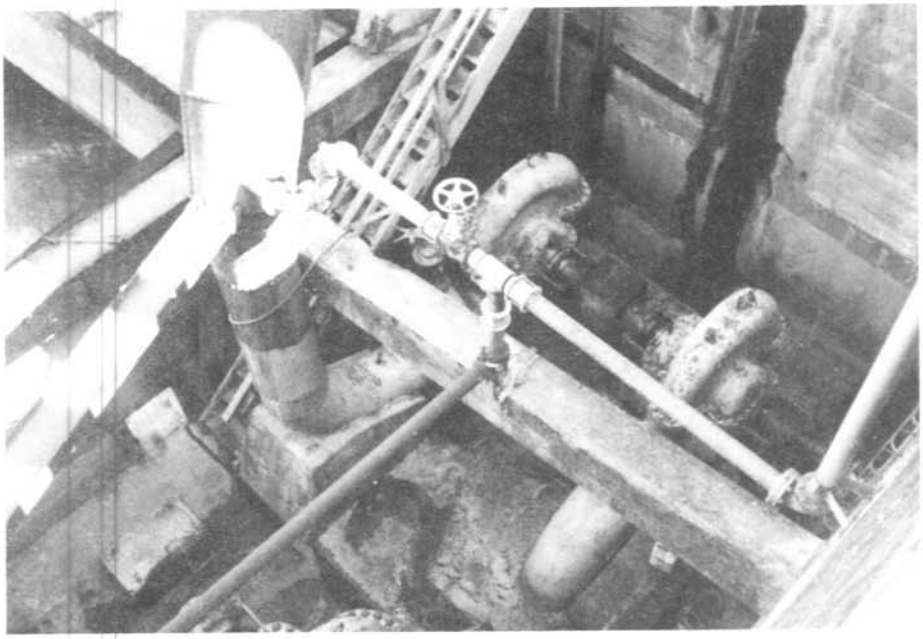

Savage Rapids Diversion Dam. Right pump turbine units. 7/91

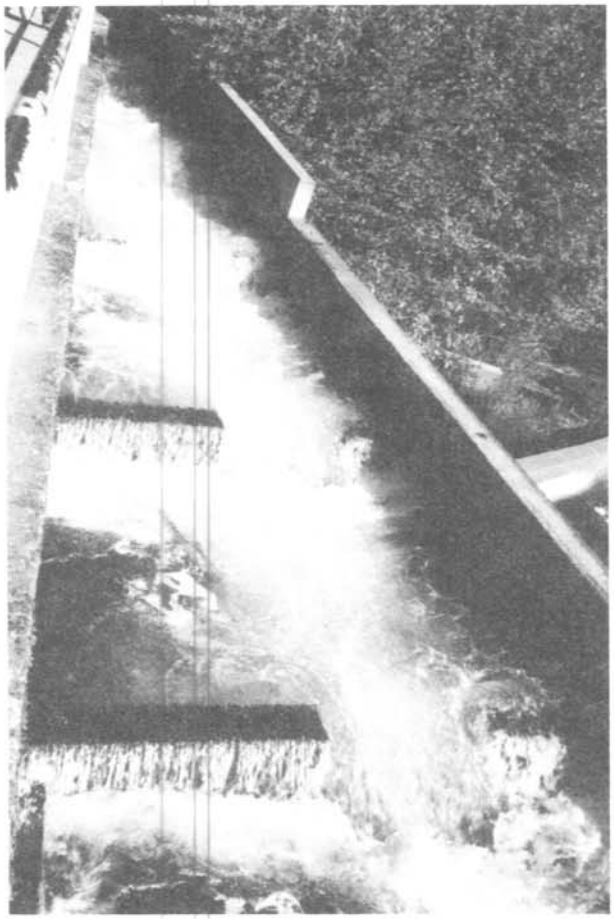

Savage Rapids Diversion Dam. South fish ladder. 7/91

Savage Rapids Diversion Dam. South Main Canal headworks. 7/91

Mission of the Bureau of Reclamation

The Bureau of Reclamation of the U.S. Department of the Interior is responsible for the development and conservation of the Nation's water resources in the Western United States.

The Bureau's original purpose "to provide for the reclamation of arid and semiarid lands in the West" today covers a wide range of interrelated functions. These include providing municipal and industrial water supplies: hydroelectric power generation: irrigation water for agriculture: water quality improvement: flood control: river navigation: river regulation and control: fish and wildlife enhancement: outdoor recreation: and research on water-related design, construction, materials, atmospheric management, and wind and solar power.

Bureau programs most frequently are the result of close cooperation with the U.S. Congress, other Federal agencies, States, local governments, academic institutions, water-user organizations, and other concerned groups.

The purpose of this Bulletin is to serve as a medium of exchanging operation and maintenance information. Its success depends upon your help in obtaining and submitting new and useful O&M ideas.

Advertise your district's or project's resourcefulness by having an article published in the bulletin! So let us hear from you soon.

Prospective material should be submitted through your Bureau of Reclamation Regional office.