WATER OPERATION AND MAINTENANCE

BULLETIN NO. 119

MARCH 1982

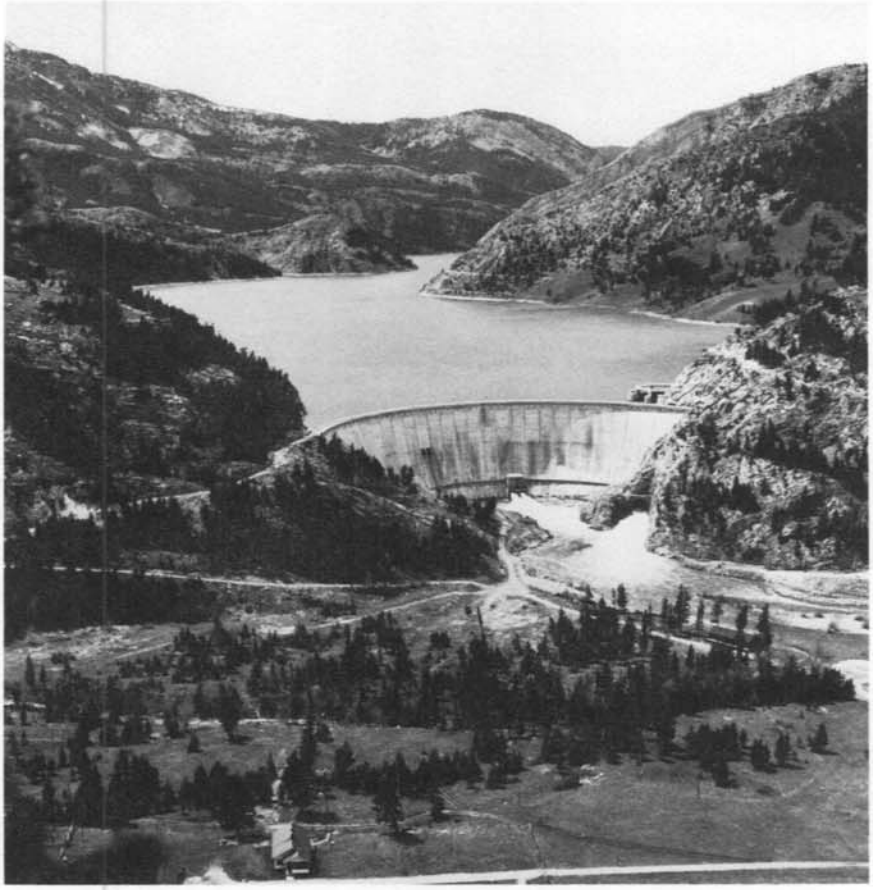

IN THIS ISSUE

BLOCKAGE OF OUTLET WORKS AT BELLE FOURCHE DAM
SELF-CLEANING SCREEN DEVICE
SHELTER FOR SURGE CONTROL VALVES
ECONOMIC BRIDGE REPLACEMENT PROGRAM
HOW TO DEAL WITH CHEMICAL SPILLS
IRRIGATION SPRINKLER WATER IN CONTACT WITH POWERLINES–BIG HAZARD
BREWSTER FLAT UNIT

UNITED STATES DEPARTMENT OF THE INTERIOR

BUREAU OF RECLAMATION

The Water Operation and Maintenance Bulletin is published quarterly for the benefit of those operating water supply systems. Its principal purpose is to serve as a medium of exchanging operation and maintenance information. It is hoped that the reports herein concerning laborsaving devices and less costly equipment and procedures will result in improved efficiency and reduced costs of the systems for those operators adapting these ideas to their needs.

To assure proper recognition of those individuals whose suggestions are published in the bulletins, the suggestion number as well as the person's name is given. All Bureau offices are reminded to notify their Suggestions Award Committee when a suggestion is adopted.

Any information contained in this bulletin regarding commercial products may not be used for advertisement or promotional purposes and is not to be construed as an endorsement of any product or firm by the Bureau of Reclamation.

* * * * *

Division of Operation
and Maintenance Technical Services
Engineering and Research Center
Denver CO 80225

Cover photograph

Gibson Dam, Sun River Project, looking west (upstream). Gibson Dam is a concrete arch structure located in northwest Montana, approximately 112 km (70 mi) west of Great Falls. It is the principal water storage facility for the Sun River Project.

SI METRIC

WATER OPERATION AND MAINTENANCE
BULLETIN NO. 119

March 1982

INTRODUCTION

The Belle Fourche Irrigation District was caught off-guard when they were ready to start their first seasonal application of water to their lands and nothing occurred. The article starting on page 1 discusses the problem and how it was solved.

A self-cleaning device that the Wenatchee Heights Irrigation District has been using very effectively is described starting on page 6.

A simple shelter around surge control valves was developed by the Solano Irrigation District to prevent damage to them from inclement weather and freezing temperatures. See article on page 10.

The article on page 13 describes replacing old bridges with prefabricated concrete structures which are safe, lasting, and relatively inexpensive.

How to deal with chemical spills are described beginning on page 14.

On page 18 are suggested safety guidelines for irrigation sprinkler water in contact with powerlines.

Compliments to the Brewster Flat Irrigation District—see page 20.

BLOCKAGE OF OUTLET WORKS AT BELLE FOURCHE DAM[1]

Most of us have experienced moments of anxiety when a faucet in our home is opened and we receive no water. However, this minor inconvenience can usually be explained and corrected in a matter of minutes by contacting the local water municipality.

What reaction would you have if no water flowed from a reservoir 1200-mm (48-in) canal outlet works when the regulating gates were opened to begin an irrigation season? Your crew is standing by to water-up the canal system and irrigators are anxious to apply the first seasonal application to their lands. The Belle Fourche Irrigation District in South Dakota faced this predicament in the spring of 1981.

Belle Fourche Dam and Reservoir are located in western South Dakota, approximately 24 km (15 mi) northeast of the city of Belle Fourche. The dam was completed in 1911, creating a reservoir with an active capacity of 228 x $10^6 m^3$ (185 000 acre-ft) of water for delivery to about 23 070 ha (57 000 acres). The dam contains two canal outlet works which are similar in design for controlling irrigation releases from the reservoir (fig. 1).

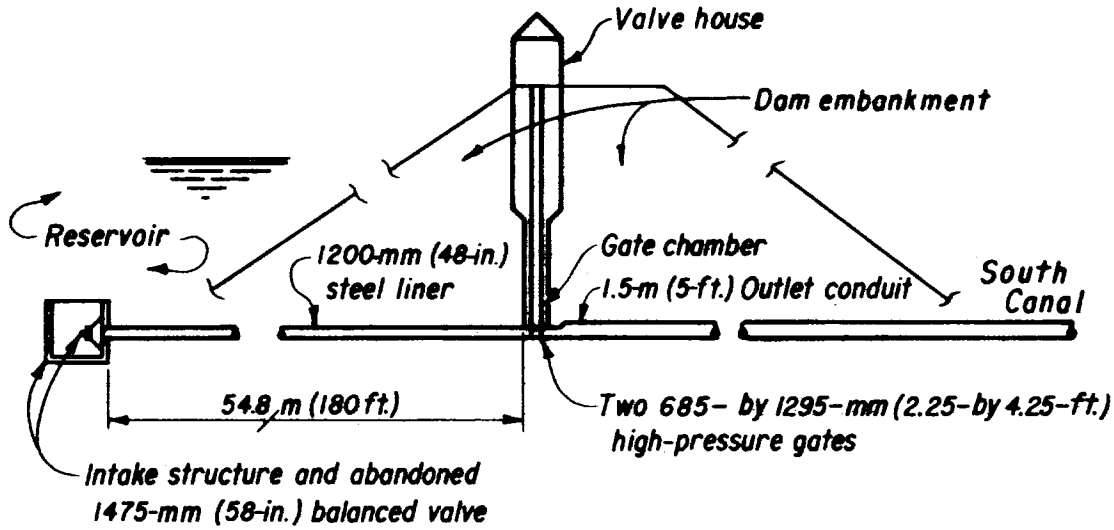

Figure 1.–South Canal outlet works.

On May 11, 1981, the Belle Fourche Irrigation District Manager, Mr. Harold Skjoldal, proceeded to open the 685- by 1295-mm (2.25- by 4.25-ft) regulating gate located in the

[1] Information provided for this article by Dan Evans, Bureau of Reclamation, Billings, Montana.

South Canal Outlet Works gate chamber as the initial requirement for filling the canal system. No discharge occurred from the outlet when the regulating gate was fully open. Mr. Skjoldal proceeded through the outlet conduit upstream of the high-pressure regulating gate for a short distance to investigate a possible cause of this predicament. With reservoir head on the outlet works intake structure, you proceed with a great deal of caution! Under these conditions, and with limited lighting available, Mr. Skjoldal was unable to determine the possible problems. The District requested assistance from the Bureau of Reclamation's Huron Project Office and Upper Missouri Regional Office to help them investigate the problem and determine corrective measures for returning the system to service.

The next day, Bureau and District personnel began their investigation of the problem by first reviewing the operational history of the outlet works for any potential evidence that may be contributing to the blocked outlet. Drawings and examination reports revealed that the canal outlet works were originally controlled by a 1475-mm (58-in) balanced valve located within the intake structure (fig. 1). Due to extensive damage by cavitation, the balanced valve was abandoned in about 1948 when a hydraulically operated slide gate was installed in the gate chamber. The balanced valve was not removed from the intake structure, but was blocked in the open position. Bureau and District personnel suspected that something may have dislodged the block holding the balanced valve open, allowing the valve to drift closed. The old control piping for the balanced valve had been buried under about 4.6 m (15 ft) of gravel, which had to be removed prior to attempting reopening the valve (fig. 2). An air line was connected to the control piping and 690-kPa (100-lb/in^2) pressure was applied to the control system. Unfortunately, the piping was in poor condition after all these years of abandonment, and leakage occurred.

Another method attempted in trying to open the balanced valve involved filling the 1200-mm (48-in) outlet pipe upstream of the regulating gate and applying air pressure. A portable pump was set on the upstream face of the dam to supply water through a vent pipe to the upstream outlet pipe. The regulating gate in the gate chamber was closed. This procedure failed because the rate of leakage of the regulating gate exceeded the pump supply. While this attempt was being made, other personnel were trying to locate the intake structure by boat with the aid of a transit on the crest of the dam. The intake was located, but the wind was blowing so strongly that it was not possible to keep the boat over the structure. The plans were to run a pipe down to the structure and apply air pressure to disturb the silt, hoping this would break loose the blockage.

Bureau personnel decided that another attempt would be made to investigate the upstream 1200-mm (48-in) pipe from inside. A Bureau employee walked to approximately 15 m (50 ft) of the intake structure where the pipe was found almost full of silt. It was then decided to try cutting through the silt using high-pressure water from the downstream portal. Ten 6.4-m (21-ft) long sections of 32-mm (1-1/4-in) pipe were placed in the canal outlet works from the outlet portal to the accumulation of silt upstream of the gate chamber (fig. 3). A fire nozzle was connected to the first section of pipe at the silted end. The regulating gate in the gate chamber was closed onto two 100 by 150 mm (4 by 6's) which were placed on the gate

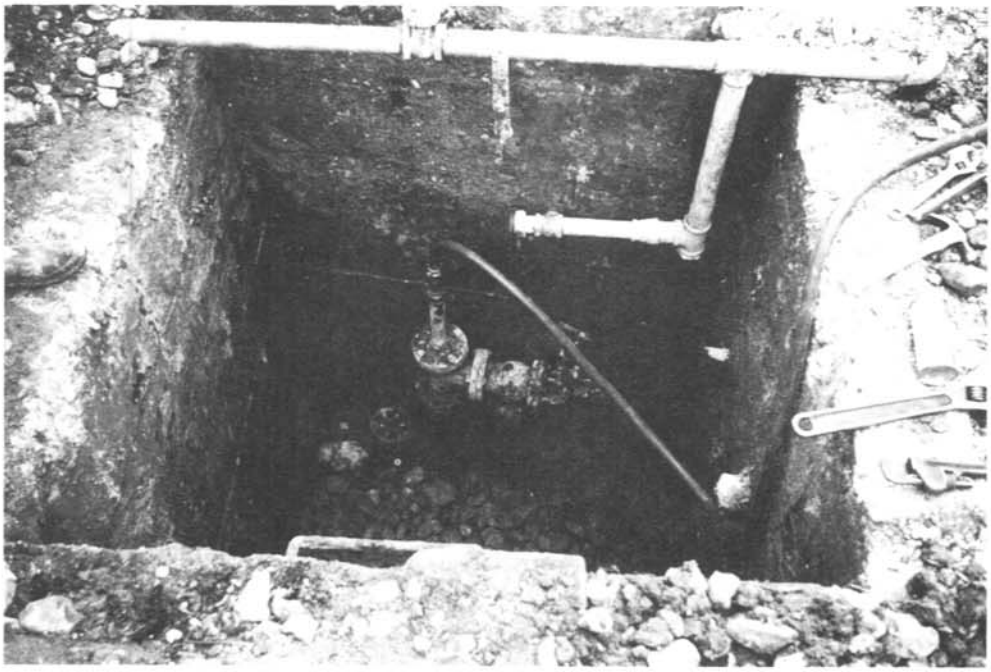

Figure 2.–Air compressor hose connected to balanced valve piping.

sill leaving a 150-mm (6-in) opening near the middle of the outlet for the 32-mm (1-1/4-in) pipe (fig. 4). This arrangement would protect workers from the on-rush of water after the silt had been pierced. A fire truck had been secured from the city of Newell to supply the water pressure. As pressure was applied to the line from the fire truck, District and Bureau personnel proceeded to advance the pipe through the silt load near the intake structure until the nozzle assembly apparently hit the balanced valve. The pipe was rotated to get more movement in the silt, and after about 3 minutes, flow began to exit from the outlet. After the personnel left the outlet channel, the regulating gate was opened and a flow of about 2.8 m^3/s (100 ft^3/s) of heavily laden silted water occurred (fig. 5). After a short period of operation, the water cleared up and the irrigation season was underway.

Figure 3.–32-mm (1-1/4-in) diameter standard pipe being coupled and fed into the 1200-mm (48-in) diameter outlet pipe.

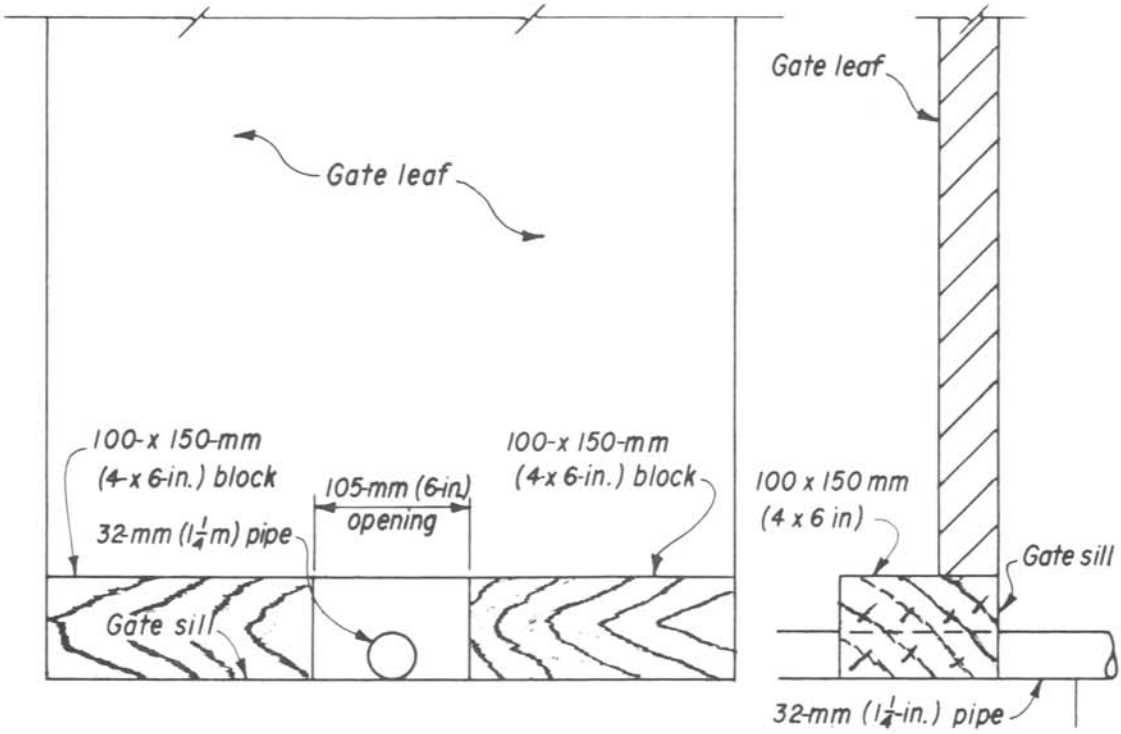

Figure 4.–High-pressure regulating gate closed on 100- by 150-mm (4- by 6-in) timbers.

Figure 5.–Water flowing through outlet works after the regulating gate had been opened. The block of wood floating near the right side of the stilling basin was one of the blocks on which the gate was closed.

The Bureau recommended that the District remove the silt accumulation around the intake structure following the irrigation season. It was also recommended that the balanced valve be removed from the intake structure.

* * * * *

SELF-CLEANING SCREEN DEVICE[2]

The Wenatchee Heights Reclamation District in Washington has been using a self-cleaning device that is designed to allow water to enter into an elevated open top tank (fig. 6). The water flows over the sides of the tank onto a sloped, perforated screen (fig. 7). The slots in the screen can be made any size depending on the discharge requirement and the size of debris to be removed. When the water flows down the screen, it drops through the perforations into a sump which is connected to a pipeline or an open channel (figs. 8 and 9). As the water flows across the screen, the debris is separated and slides down the screen into a collection trough.

The Wenatchee Heights screening system is equipped with a set of probes which monitors the water elevation in the discharge sump (fig. 10). If the water elevation changes, an air operated gate regulates the flows into the self-cleaning screen module. A set of probes is also located in the debris trough. If the screen plugs and water flows into the trough, a signal is transmitted to the operating office so corrective action can be taken.

Figure 6.–Self-cleaning device.

[2] Information for this article was provided by the Regional Office in Boise, Idaho, Bureau of Reclamation.

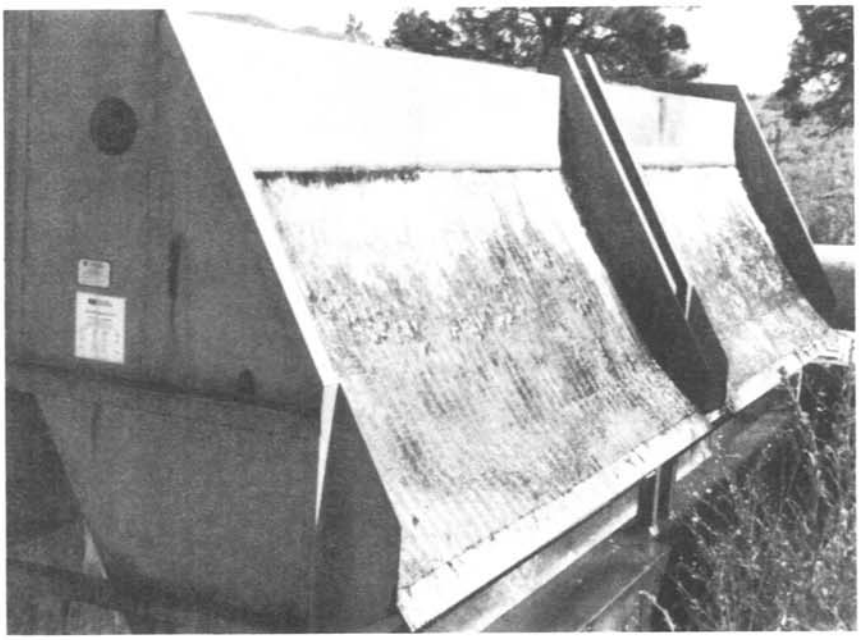

Figure 7.–Water flowing over side onto a sloped perforated screen.

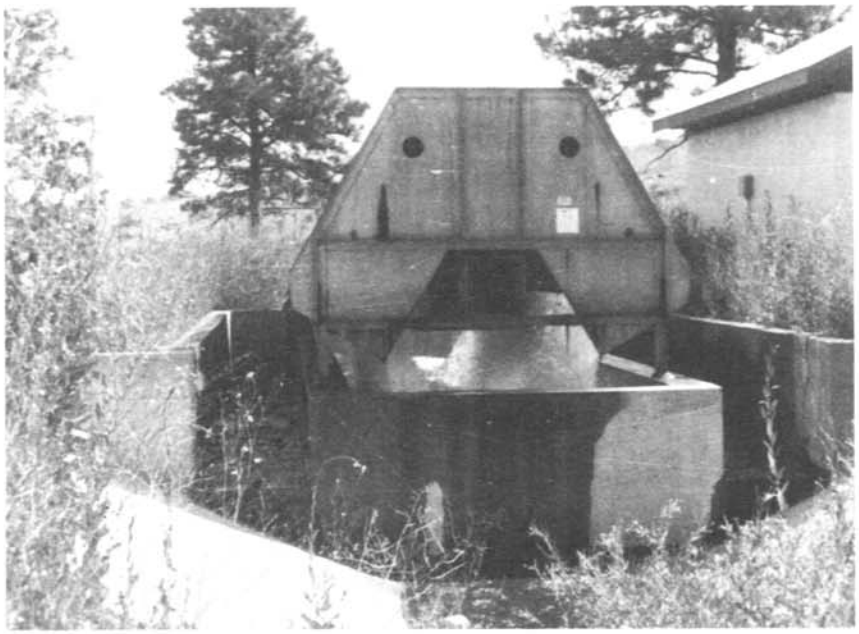

Figure 8.–Water drops through perforations into sump.

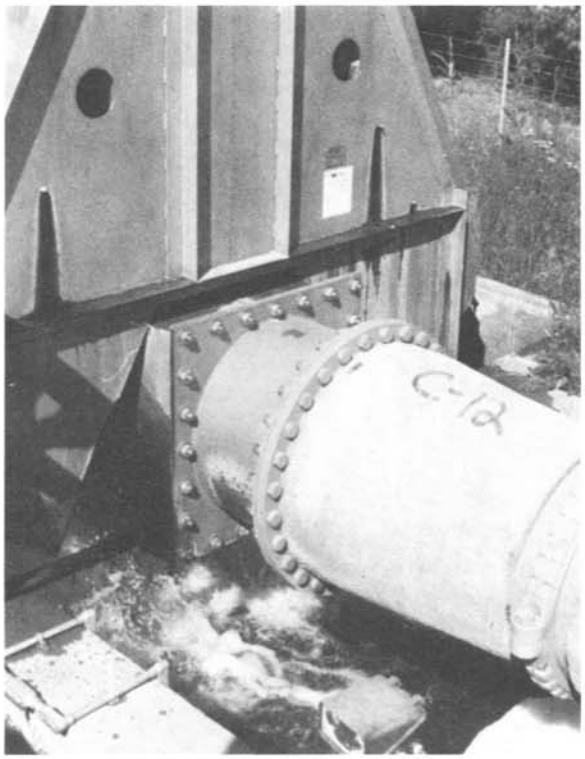

Figure 9.–Sump connected to pipeline or an open channel.

Figure 10.–Probes monitor the water elevation in the discharge sump.

The Hydrasieve screen comes in modules which can be connected together, depending upon the amount of discharge required. There are no moving parts in the screening system. The Hydrasieve screen is manufactured by Combustion Engineering, Inc., Springfield, Ohio.

* * * * *

SHELTER FOR SURGE CONTROL VALVES[3]

The Solano Irrigation District in California devised a simple shelter around the surge control valves at a pumping plant to prevent damage to them from inclement weather and freezing temperatures. The shelter is made of plywood and painted to preserve the wood. The whole structure is bolted together. Should the temperature drop below 5 °C (40 °F), a thermostatically controlled 100-W spotlight illuminates to provide heat to keep the valves warm. The shelter has proved successful because it is easy to assemble, as well as to take apart when service to the valves is required (see figs. 11 through 14).

Figure 11.–Shelter for surge control valves.

[3] Material for this article provided by Gordon Johnston, retired, Solano Irrigation District.

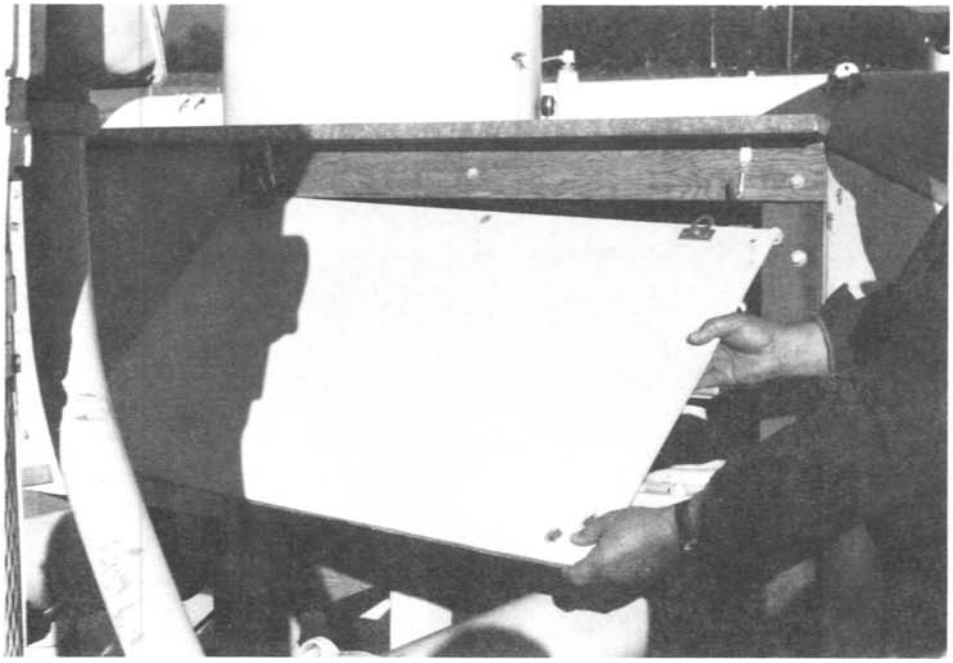

Figure 12.–Structure is made of plywood.

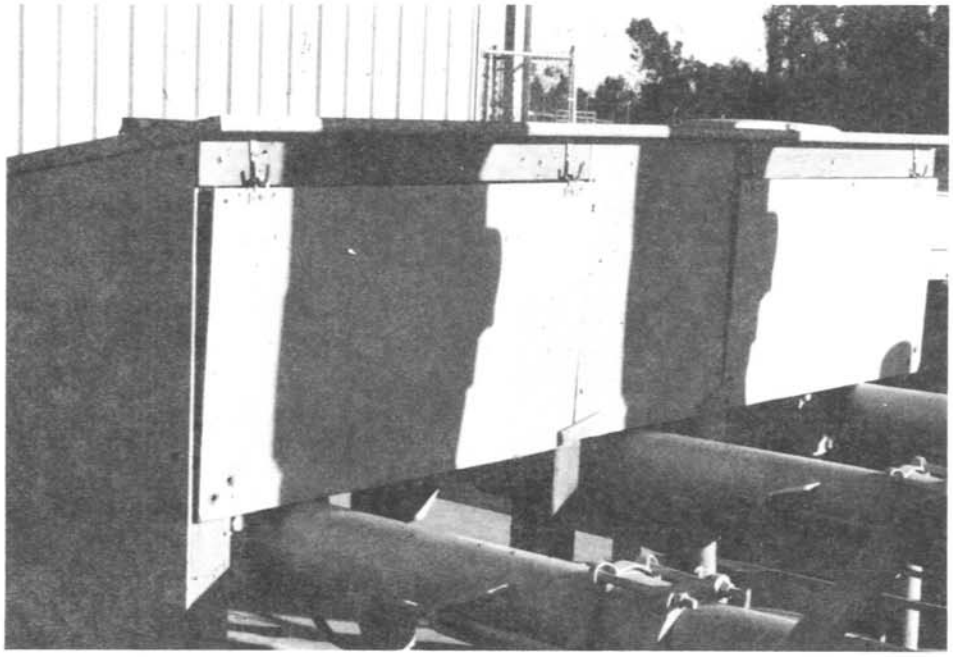

Figure 13.–Structure is bolted together.

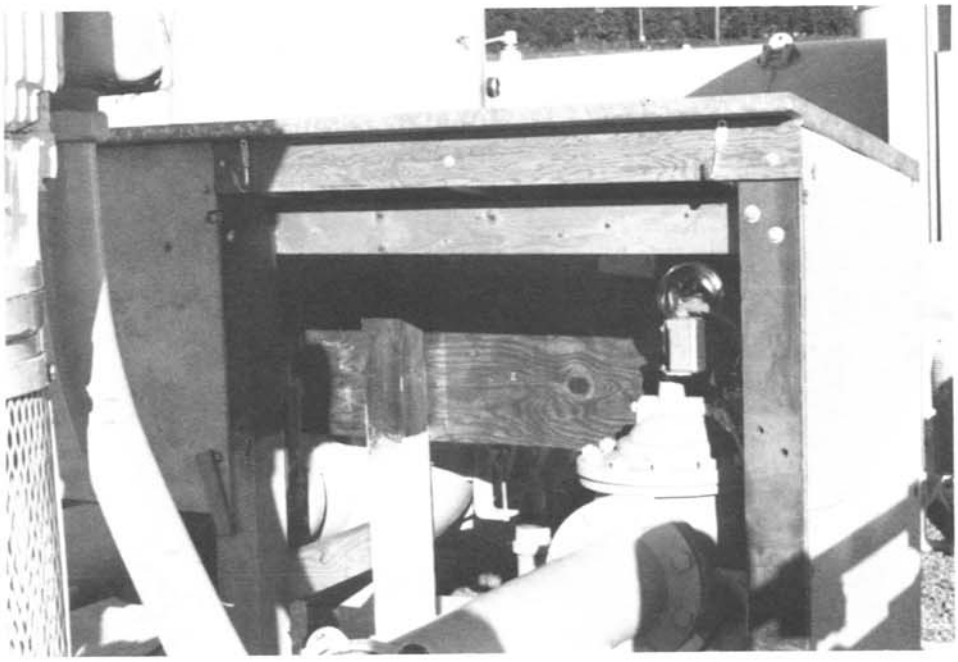

Figure 14.–Thermostatically controlled 100-W spotlight provides heat to keep valves warm.

* * * * *

ECONOMIC BRIDGE REPLACEMENT PROGRAM[4]

In 1978, Graves County, Kentucky, had 200 narrow and decaying wooden bridges which posed a threat to safety. Replacement seemed to be impossible. That is no longer true. The county has embarked on a comprehensive bridge replacement program. It is systematically replacing its old bridges with prefabricated concrete structures, which are safe, lasting, and relatively inexpensive. The single element which makes the undertaking possible is use of a prefabricated concrete cap and beam combination. With these two basic building blocks, a county can build good concrete bridges for what repairs would cost on the old structures. All they need is forms for casting.

Bridges are designed to meet HS-20 standards allowing maximum load weights of 20 185 kg (44 500 lbs). The thickness of the center beam is 203 mm (8 in); the depth of the beam is 406 mm (16 in). Graves County uses nine forms which allow bridge sections 0.9-m (3-ft) wide and up to 6-m (20-ft) long. Segments can be shortened by moving a wooden dam inside the form to pour sections of any desired length between 3 and 6 m (10 and 20 ft).

Fabrication of the forms requires highly skilled welders and machinists, but beyond those few workers the program does not necessitate the hiring of additional skilled labor. Once the forms are built, no specialized construction skills are required to cast the segments and erect the bridge sections.

Time savings are impressive. A well-trained, three-man crew, with the prefabricated units delivered and ready, can erect a bridge in as little as 3 days.

The decisive criteria are labor, time, and cost. Here cost is the good news. The total cost of site preparations, casting, installing, and backfilling on a 6-m (20-ft) bridge is under $3,500. A 12-m (40-ft) bridge can be brought in for under $5,300.

* * * * *

[4] Reprinted with special permission from Editor of the American Transportation Builder.

HOW TO DEAL WITH CHEMICAL SPILLS[5]

Winand K. Hock

Although skilled handling of chemicals is the rule with today's growers, applicators, and dealers, there is one eventuality that not all are as prepared for as they should be: spills.

While spills are not common, and while care can prevent many potential spills from materializing, there is still a good chance that at one time or another any agrichemical user will have a spill on his hands. Whether it is a minor one, involving only a leaking container, or a major one where an equipment malfunction causes a fully loaded spray tank to release its contents, the serious threat to public health that is involved in any spill makes prompt and appropriate action crucial.

Familiarity with a good set of guidelines is the best first step a grower can take toward being ready to cope with a spill. The "Three-C" program outlined here groups spill handling into three stages: controlling the spill, containing the spill, and cleaning up the spill.

Control

Immediate steps should be taken to control the flow of the liquid being spilled regardless of the source. If a sprayer has tipped over, or if a hazardous chemical is leaking from a rusted-through 3.78- or 18.9-L (1- or 5-gal) can on a storage shelf, do everything possible to stop the leak or spill at once. Smaller containers up to 208-L (55-gal) can be put into larger containers to prevent further release of the chemical. Stopping larger leaks or spills often is not so simple.

Do not expose yourself unnecessarily to the leaking chemical; use protective equipment and clothing when attempting to control the leak. And if someone is injured, do not just charge in blindly – make sure you are ready to act in a way that will not further endanger the injured or entail pointless risks for you.

Get help. Have someone alert the Highway Patrol if the spill occurs on a public highway. Contact the State Department of Food and Agriculture, and be sure to have the product label available. In certain cases, it may be necessary to alert the fire department, and be sure to caution them not to wash down the spill until advised to do so. At times, it may be even necessary to contact public health officials.

Isolate the contaminated area by roping it off. Keep people at least 9 m (30 ft) away from the spill. Avoid coming into contact with any drift or fumes that may be released. Do not use road flares if you suspect the leaking material is flammable. At times it may be necessary

---

[5] Reprinted with permission of California Farmer; copyright 1981 California Farmer Publishing Co.; not for reprinting.

to evacuate people downwind from the spill, depending upon the size of the spill and the nature of the material.

Do not leave the spill site until someone relieves you. Someone should be present continuously until the chemical is cleaned up and the danger is removed.

Contain

At the same time the leak is being controlled, contain the spilled material in as small an area as possible. Do everything possible to keep it from spreading or getting worse. Use a shovel, or if the spill is very large, power equipment, to construct a dam. The important thing to remember is not to let the spilled material get into any body of water, including storm sewers, no matter how small the spill.

If the chemical does contaminate a stream, pond, or any other waterway, have the appropriate state and local authorities notify water users downstream as soon as possible to prevent accidental poisoning of livestock and to avoid contamination of crops and soil if the water is used for irrigation.

Liquid spills can be further contained by spreading absorbent materials such as fine sand, vermiculite, sawdust, clay, or kitty litter over the entire spill. However, a word of caution: Avoid using sawdust or sweeping compounds if the material is a strong oxidizer. Such a combination presents a possible fire hazard.

In the case of dust, wettable powder, or granular material, you can reduce further spread by lightly misting with water or covering the spill with plastic. Remember, however, that the plastic is now contaminated and should be discarded after use.

Clean Up

If you have not already done so, spread absorbent material over the contaminated area, sweep it up, and place it in a heavy-duty plastic bag. Keep adding the absorbent until the liquid is soaked up. Once the spill has been cleaned up, it may be necessary to decontaminate or neutralize the area, especially if a carbamate or organophosphate insecticide was involved.

Use ordinary household bleach full strength and hydrated lime mixed together. Work this preparation into the spill area with a coarse broom. (Remember to wear protective equipment if needed.) Then add fresh absorbent material to soak up the now contaminated cleaning solution. This material should then be swept up and placed in a plastic bag or drum for disposal. It will be necessary to repeat this procedure several times to insure that the area has been thoroughly decontaminated.

Before applying any of the above absorbent materials or neutralizers, be sure you know the nature of the spilled chemical in order to avoid harmful reactions.

The only thing that will effectively decontaminate soil saturated with a hazardous chemical is to remove the soil to the depth of contamination (usually 50 to 75 mm) (2 to 3 in). Be sure to dispose of this contaminated soil at a proper disposal site. Then cover the area with at least 50 mm of lime. Finally, cover the lime with fresh topsoil.

Soil contaminated as a result of application errors or minor spills can sometimes be cleaned up by applying activated charcoal to the contaminated surface immediately after the spill or misapplication. The charcoal may absorb or tie up enough chemical to avoid significant plant injury and long-term contamination. However, application of activated charcoal to areas where large spills have occurred will do little to reduce soil contamination and subsequent plant damage.

Clean up any vehicles and equipment contaminated, either as a result of the original accident or during the clean-up procedure. Before you begin, however, be sure you are properly clothed and protected to avoid contact with the chemical. Use chlorine bleach-alkaline detergent (dishwasher soap) solution to clean your equipment. Porous material and equipment such as brooms, leather shoes, and cloth hats cannot be decontaminated effectively and must be discarded or destroyed.

Emergency Response

To protect the public and to assist public agencies in handling chemical mishaps, the chemical industry has developed an emergency response system. The Pesticide Safety Team Network (PSTN) of the National Agricultural Chemicals Association (NACA) is a joint effort of technically qualified manufacturers to respond to emergency situations in which pesticides or some other hazardous chemicals have been spilled accidentally. The PSTN can be reached by telephone 24 hours a day through CHEMTREC (Chemical Transportation Emergency Center) at (800) 424-9300 (toll free).

The CHEMTREC office is staffed by competent and trained personnel who are knowledgeable in handling emergencies involving pesticides and other hazardous chemicals. When the caller dials the CHEMTREC number, the following sequence of events is called into play:

- CHEMTREC contacts the area coordinator for the region in which the accident occurred. The country is divided into 10 regions. Each has several pesticide safety teams staffed by chemical company personnel.

- The area coordinator contacts either the manufacturer of the chemical involved in the spill or the person who reported the accident to obtain additional information.

- If the manufacturer or the area coordinator cannot handle the problem, then the area coordinator contacts and dispatches a safety team to the site.

* * * * *

IRRIGATION SPRINKLER WATER IN CONTACT WITH POWERLINES–BIG HAZARD[6]

A stream of water from a sprinkler irrigation system in contact with overhead powerlines may be a safety hazard warns U.S. Department of Agriculture engineer, LaVerne Stetson.

Water in contact with an energized line may carry leakage currents, Stetson says. The chance for accidents may increase as more land is put under sprinkler irrigation, more installations are near powerlines, and larger sprinklers are in use.

Stetson suggests these safety guidelines:

- Don't touch irrigation equipment while striking powerlines.
- Seek advise from the power company. Conditions specific to the site may determine whether a hazard exists.
- Adequately ground the irrigation machine. But treat a traveling sprinkler as dangerous while the stream is contacting powerlines even if the sprinkler is grounded. Properly grounding a traveler is difficult.
- Break up the water stream as an emergency measure by inserting a bend in the waterline near the sprinkler, partially obstructing flow or allowing some air into the pump intake.
- Improve safety by selecting a smaller stream or using a ring insert nozzle to break up the stream.
- Get the power company's advice before installing a sprinkler system near its lines.

Stetson's recommendations are from a study with Stephen Seematter of the Nebraska Public Power District, Columbus, Nebraska, and Richard Hanson of the Nelson Corporation, Grand Island, Nebraska.

The Loup Power District, Columbus, provided the site near 12.5 and 115-kV lines for tests with a big gun traveler sprinkler. The study was organized by the power district, USDA's Science and Education Administration, and the Irrigation Association, represented by three sprinkler manufacturers.

The engineers say that the amount of leakage current during water-to-powerline contact may be affected by line voltage, clearance from lines, wind, electrical conductivity of the water, and size and dispersal of the stream of water.

---

[6] Reprinted by special permission of Editor, Irrigation Journal. Copyrighted material from March/April 1980 issue, not for reprinting.

More leakage current will be carried through water in contact with lines carrying high voltage under like conditions, but the hazard may exist near low-voltage lines.

The most dangerous time for water contact with powerlines is on a still day, the engineers found. Wind significantly reduced leakage current during the tests unless it was less than 5 km (3 mi) an hour and directly behind the water stream.

Water varies in electrical conductivity, which affects the amount of leakage current carried. More impurities in the water increases its electrical conductivity. Water pumps from underground sources generally have higher conductivity than surface water, Stetson says.

Fertilizer added to the water may increase its electrical conductivity and the possibility of hazards. The increase will be proportionately greater in water that's low in conductivity.

* * * * *

BREWSTER FLAT UNIT

During the Bureau's regular examination of minor structures and facilities of the Brewster Flat Unit, Washington, the team was very impressed with the Brewster Flat Irrigation District's two residences and a combination office-shop building. These are excellently maintained, and the grounds are well landscaped and kept in good condition (fig. 15). They also purchased a 3-wheeled motorcycle, which is not only economical to operate, but also allows easier access through orchards to reach meters and turnouts (fig. 16).

Figure 15.–Excellently maintained residence.

Figure 16.–Three-wheeled motorcycle.

* * * * *

GPO 835 - 128