Figure 103

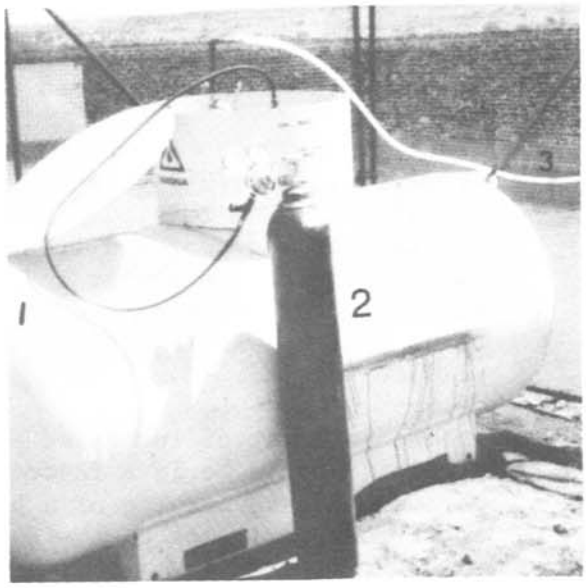

Figure 104

Figure 105

Figure 106

tanks from tipping over. The skid also facilitates transportation of the tanks to the application area. It is relatively simple to lift the skid into the bed of a pickup truck with a forklift.

Acrolein is a highly volatile and inflammable liquid, which forms a gas when exposed to air. It must be handled with caution. Because of its piercing odor and irritating effect on the mucous membranes of the respiratory system and eyes, a gas mask should always be available for use in the event of equipment leaks. With this form of irritating warning signal, there is little likelihood persons will be injured.

In the interest of increased safety, the tanks and cylinders of acrolein should be in a fenced enclosure during the application period. Signs, warning of a hazardous chemical, should be posted at various locations on the enclosure fence.

Aquatic Weed Sampler

Personnel of the Columbia Basin project use the aquatic weed sampler shown in figure 107 to determine growth of submersed weeds. The sampler is thrown into the canal and while being retrieved picks up vegetation from the canal bottom. The need for chemical treatments to aquatic vegetation can be determined by use of this sampler.

The sampler is constructed from a length of 4-inch-diameter heavy iron pipe about 12 inches long. Teeth are cut with a torch, and alternate teeth are bent outward. Slots are cut into the bottom to allow water to pass through the sampler. Strap iron is welded to the ends of the pipe to form a handle to which a length of rope is attached. This device has proven very effective in sampling aquatic vegetation.

Mechanical Methods for Control of Aquatic Weeds

Numerous devices, from hand tools to very elaborate cleaning devices, have been used for the cleaning of aquatic weeds from canals. The few illustrated methods given in this section of the bulletin are typical of many devices and convey the general idea that disposal is the more important problem, which is discussed later.

Chaining and drags. - Removal and disposal of submersed aquatic weeds in large canals was a problem which had previously been solved only by mechanical methods. Since chemicals have been used to control aquatic vegetation, the use of mechanical methods has declined to practically zero. Chaining (fig. 108) was

Figure 107

Figure 108

one of the most used mechanical methods and consisted of dragging a very heavy linked chain (fig. 109) over the bottom of the canal.

At least three passes of the chain usually were required; however, treatments were repeated as necessary to relieve the aquatic weed problem. Two or three chainings a season were the minimum. On some projects the treatments were repeated every 10 days.

On projects containing many pumps, farm sprinkler systems, siphons, or spiles, management would chain only as a last resort. In these instances, special diversion structures might be constructed to keep the water relatively free of weed debris, which clogs pumps and farm sprinklers. The problem is illustrated in figure 110 on the Boise project, Idaho, where weeds loosened from the bottom of the canal by chaining were deposited on a trashrack provided for collection of weeds and debris. Expensive hand removal of the debris was necessary where other facilities were not available.

The *sidearm boom* has proven satisfactory for towing deweeding equipment through irrigation ditches where only one ditchbank operating road has been provided. The boom shown in figures 111 and 112 was designed by personnel of the Patterson Water Company, Patterson, Calif.

A special platform was constructed on the tractor hitch as a support for the boom. The boom was made from 3-inch-diameter pipe to which the free-swinging butterfly is fitted and held in the desired position by two collar clamps. Being able to move the butterfly back and forth on the boom permits the operator to center the drag in ditches of different widths and also allows adjustment for the distance from the ditch where the tractor must operate.

When it is desired to make a return trip, the hitch end of the boom is unpinned and refastened to the opposite side of the platform. The butterfly is turned over, and the anchor cable is hooked into an eye welded to the track-bar shield on the opposite side of the tractor.

The plank spreaders are necessary to keep the heavy chain at the proper width to attain full coverage of the ditch. Sufficient length of cable and chain should be used so the entire loop lies flat on the canal bottom and the pull is as horizontal as possible. A drag that is too short results in an upward pull, and the chain passes over the weeds without breaking or tearing them loose.

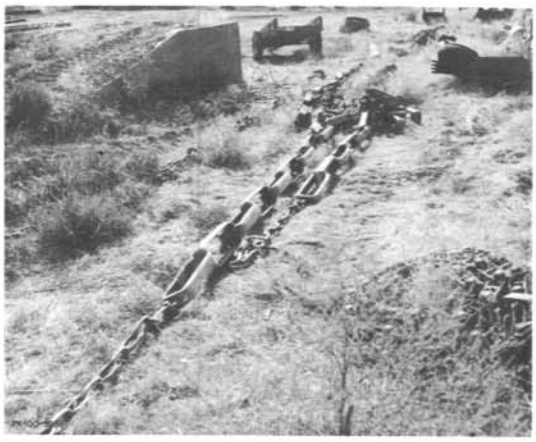

Figure 109

Figure 110

Figure 111

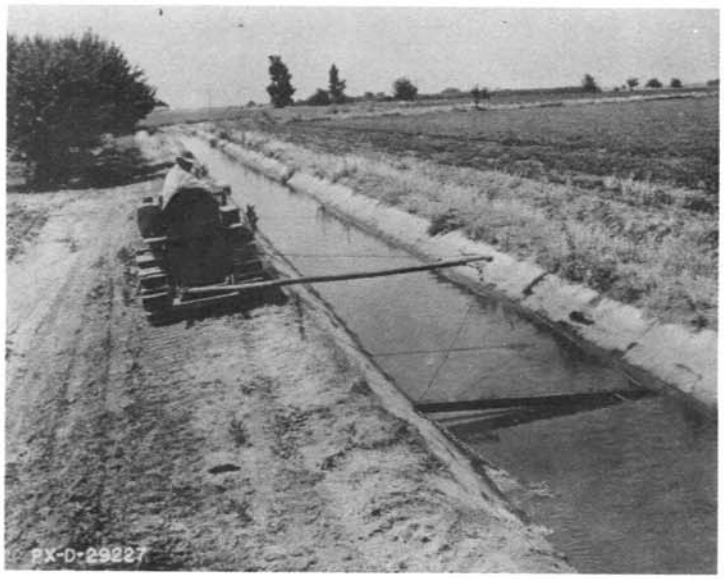

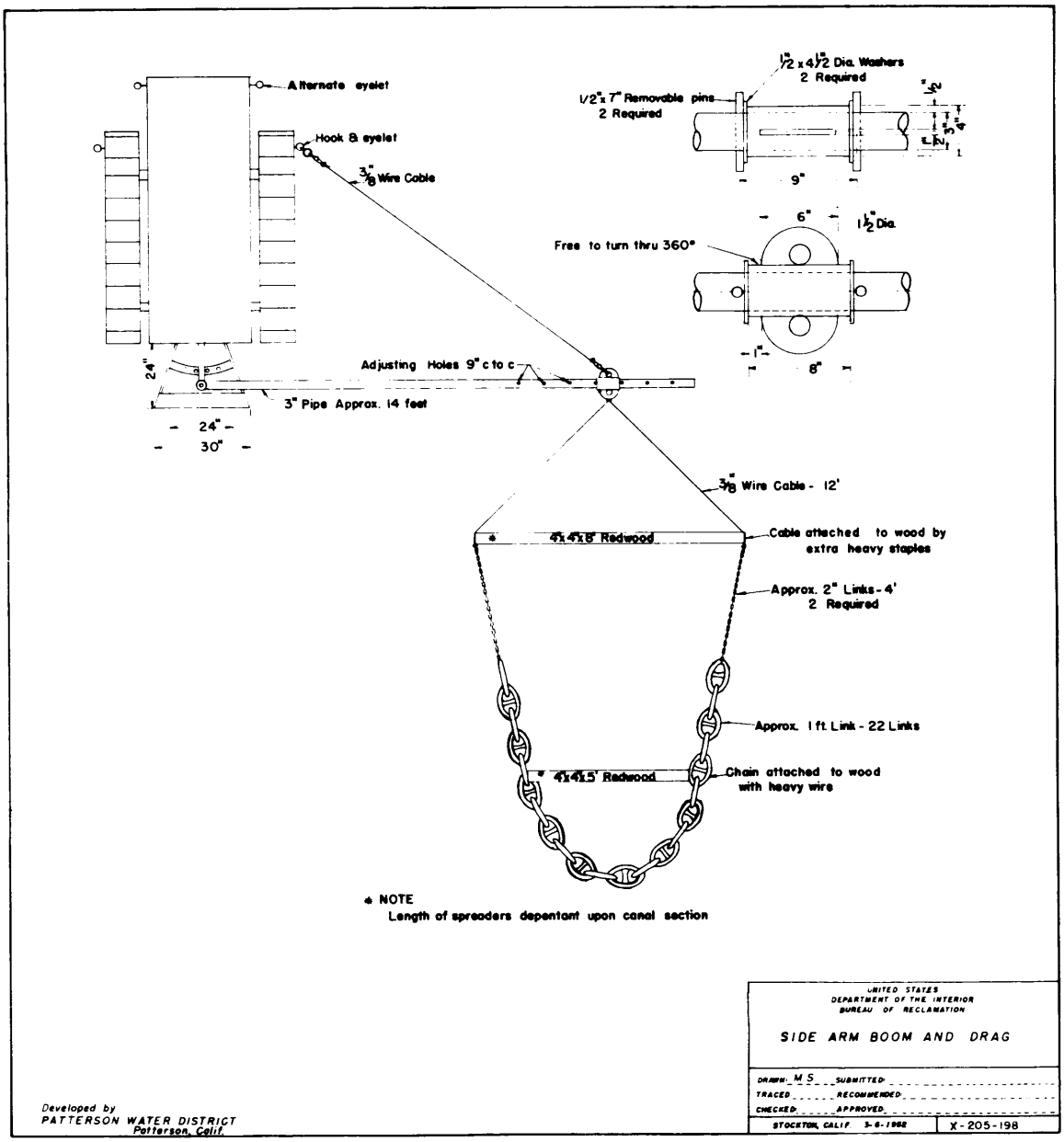
Alternate eyelet
Hook & eyelet
3/8" Wire Cable
1/2" x 4 1/2" Dia. Washers
2 Required
1/2" x 7" Removable pins
2 Required
9"
6"
1 1/2" Dia.
Free to turn thru 360°
1"
8"
Adjusting Holes 9" c to c
3" Pipe Approx. 14 feet
24"
30"
3/8" Wire Cable - 12'
4x4x8' Redwood
Cable attached to wood by extra heavy staples
Approx. 2" Links - 4'
2 Required
Approx. 1 ft. Link - 22 Links
4x4x5' Redwood
Chain attached to wood with heavy wire
* NOTE
Length of spreaders dependant upon canal section
UNITED STATES
DEPARTMENT OF THE INTERIOR
BUREAU OF RECLAMATION
SIDE ARM BOOM AND DRAG
DRAWN M S
SUBMITTED
TRACED
RECOMMENDED
CHECKED
APPROVED
STOCKTON, CALIF. 3-6-1962
X-205-198
Developed by
PATTERSON WATER DISTRICT
Patterson, Calif.

Figure 112

The *anchor chain and disk* method employs two crawler tractors, one on each canal bank, with anchor chain and disk assemblies dragged between them on the canal bottom, as shown in figure 113. The chain and disks dislodge the aquatic weed growth, which floats downstream where it is collected on weed racks and removed by mechanical equipment. Figures 114 and 115 are views of the chain and disks used.

Only moderate interruptions occur to irrigation operations due to the chaining procedure. There are some dislodged weeds that slip through the weed racks and collect on canal and lateral gates and in farmers' irrigation ditches. These dislodged weeds must be removed immediately to avoid flow reduction.

Silt accumulations are leveled as the equipment passes through the system. The silt, which is agitated during the operation, moves downstream and settles at a rate dependent on the velocity and the amount of water in the canal.

Specifically, this method employs two tractors which pull 80 feet of 16- by 7-inch anchor chain. Connected to each end of the anchor chain is a short length of 4- by 3-inch lead chain which is fastened to the drawbar of each tractor. Concave disks, 18 inches in diameter, in gangs of eight, are connected as needed to a 4- by 3-inch lead chain which is attached at each end to the tractor drawbar and pulled in front of the anchor chain, as depicted on figure 116.

The Salt River project, Ariz., has purchased a pair of heavy-duty rubber-tired tractors, as shown in figure 117, to replace the crawler-type tractors previously used for the chaining procedure. These tractors do not require the placing of protective material when crossing a paved road, and they can move from one job to another under their own power.

The Imperial Irrigation District in California has been using various types of equipment for clearing the excessive aquatic weed growth in their canals and drains. They have used disks and plows for a number of years to cut and clean their canals during periodic draining and drying (approximately 3 days every 4 weeks).

The standard procedure was to disk the canal and follow with a plowing. Various modifications of the equipment have been tried throughout the years with some success. Within the past years, a new type of disk was developed that has proven to be very efficient (figs. 118, 119, and 120).

Figure 113

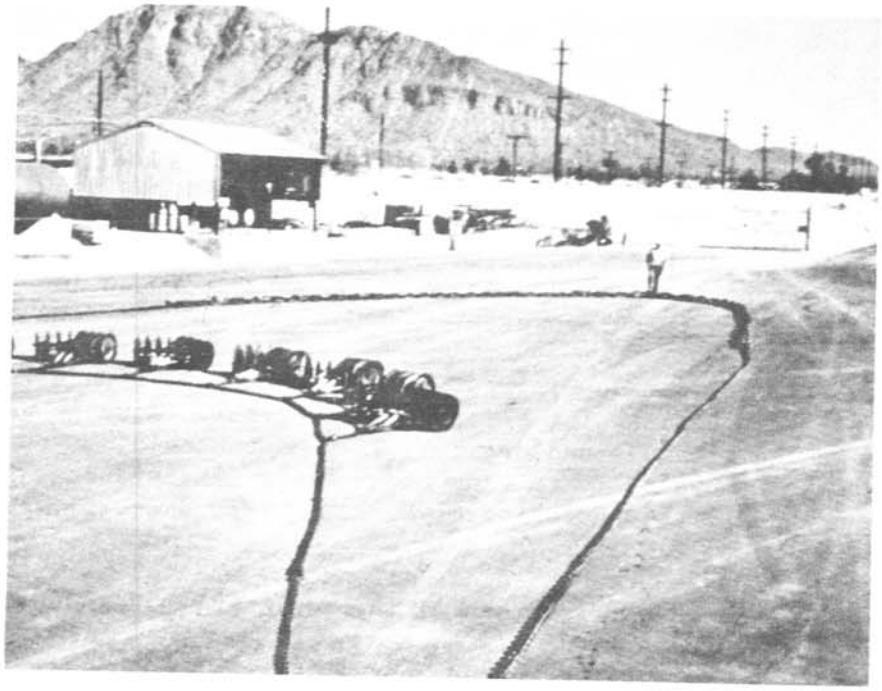

Figure 114

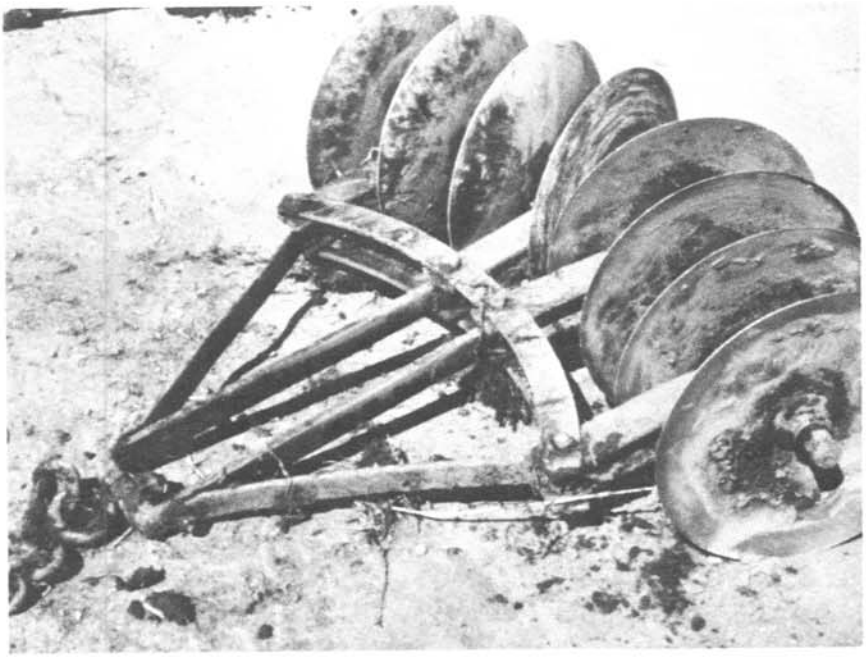

Figure 115

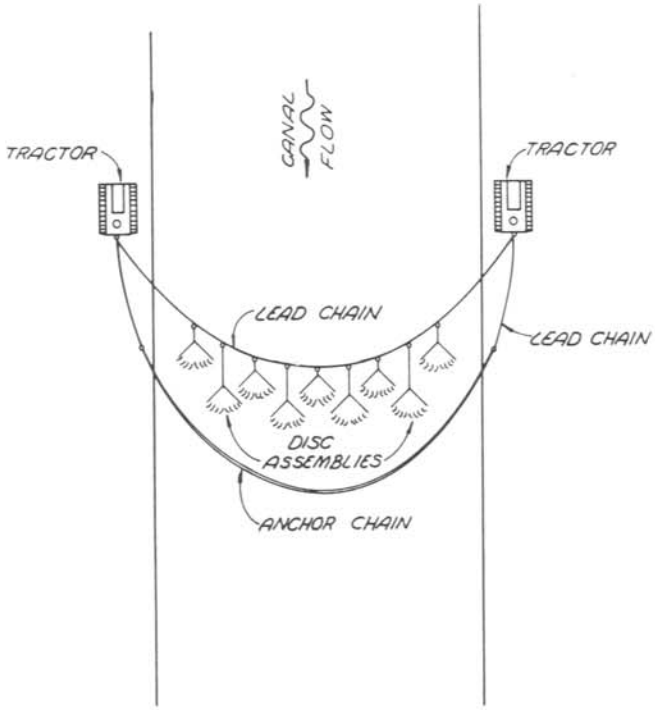

Figure 116

Figure 117

Figure 118

Figure 119

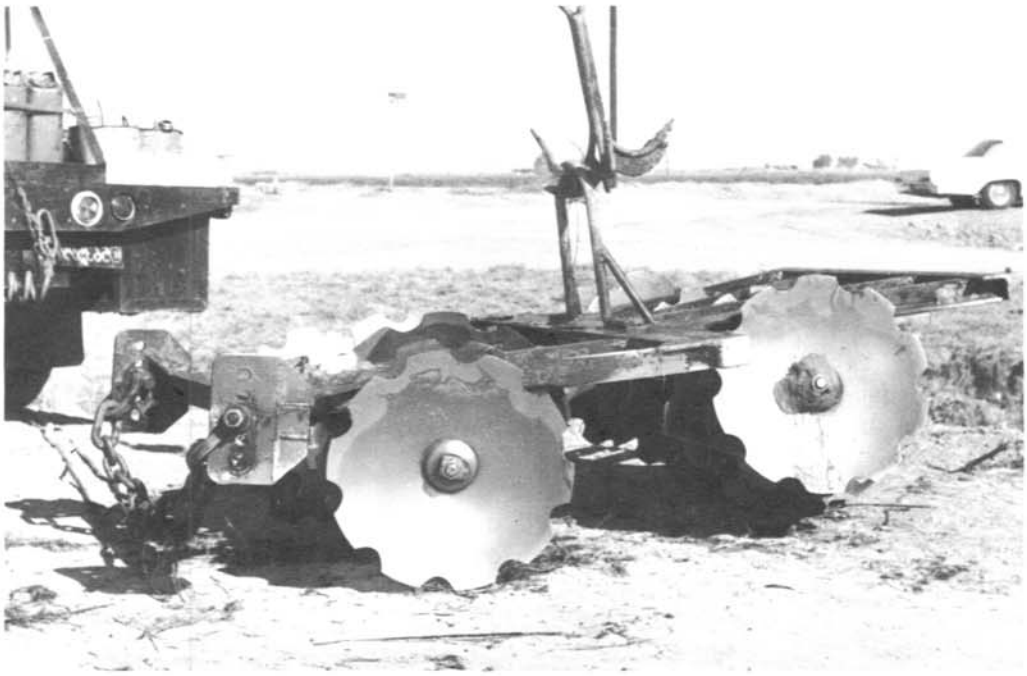

Figure 120

The new *notched vee disk* incorporates several new ideas which have proved to be effective in clearing and shaping the canals and drains. The major design changes are as follows:

1. The disk frame is a solid, one-piece frame (fig. 120), which helps prevent the disk from riding over sandbars. The frame is made of heavy angle iron, which gives the necessary weight and also gives a virtually maintenance-free disk.

2. The disk blades are of the notched type, 1/4-inch thick; the inner blades being 28-inch outside diameter and the outer blades 24-inch outside diameter. The notched blades give the necessary "biting" so that they continue to operate and never stop their cutting action. Because of this and the fact that there is sufficient clearance between the frame and the disk, the disk very rarely gets clogged with algae. The major, and possibly the most significant, factor to the success of this disk is that the rear gangs are slanted at a 15-degree angle (fig. 118). Because of this, the front gangs are always being forced downward and the rear gangs are leaving a deep furrow for drainage of water. With this equipment, the Irrigation District has been able to do the job of two pieces of equipment with one. Refer to figures 121 and 122.

The success of the notched vee disk is based upon observations as outlined below.

1. It chops up pondweed better than before, permitting it to flow through siphons without plugging.

2. It is capable of doing in one pass what the old disk had required three passes to accomplish.

3. It is capable of doing a better job than the plow in addition to working as a disk.

4. Regular use of the disk keeps the canal and drain channels in good form and prevents water from backing up in the farm tile outlets.

Aquatic weed cutter. - The aquatic weed cutter shown in figures 123, 124, and 125 was developed by personnel of the Solano Irrigation District of the Solano project, Vacaville, Calif. The cutter is shown operating in the Putah South Canal, which contained a heavy growth of watermilfoil, sago pondweed, and filamentous green algae. The canal delivers municipal and industrial water in addition to irrigation water, so chemicals other than copper sulfate are not used for aquatic weed control.

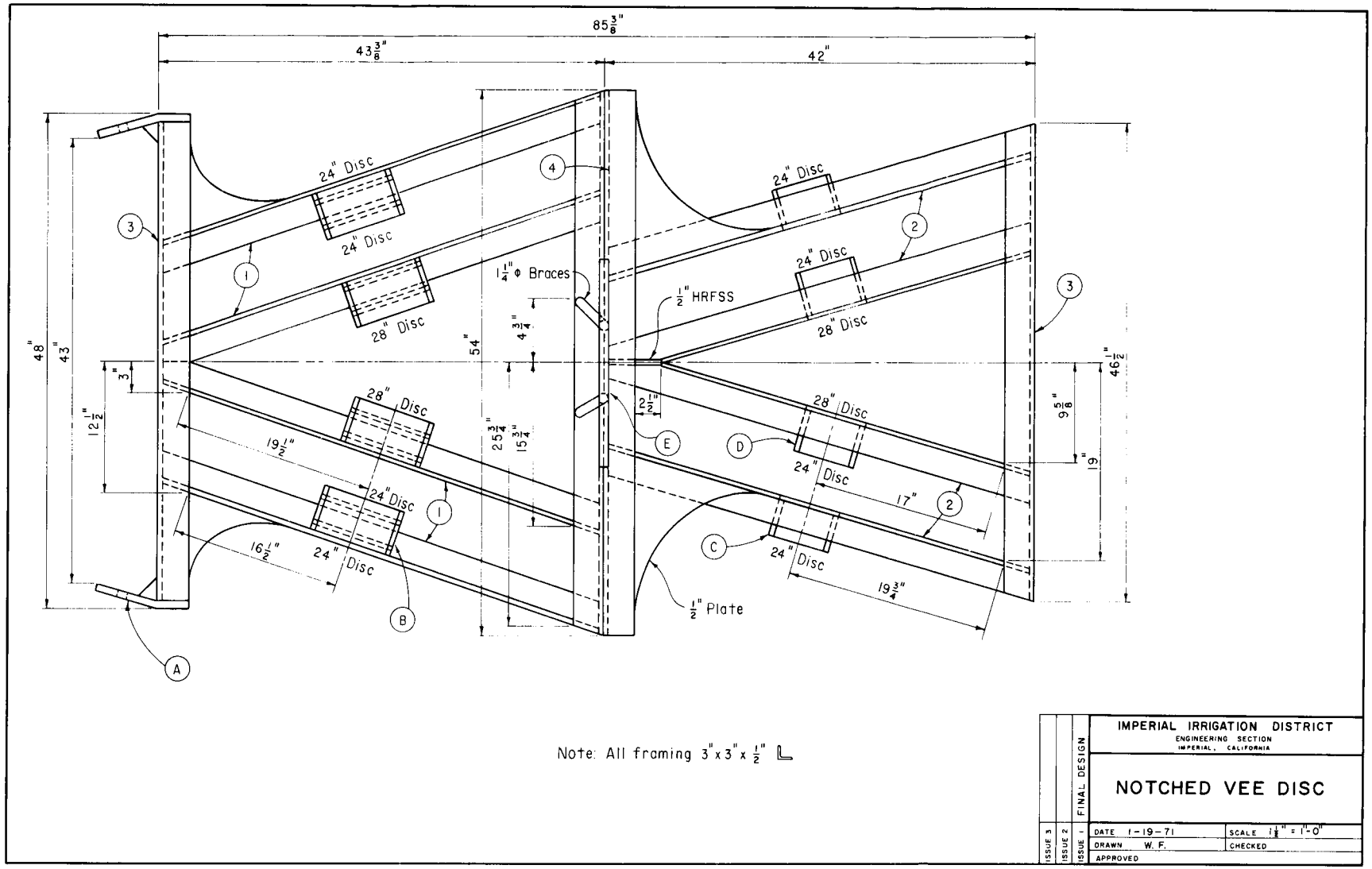

SH. 3 OF 4

Figure 121

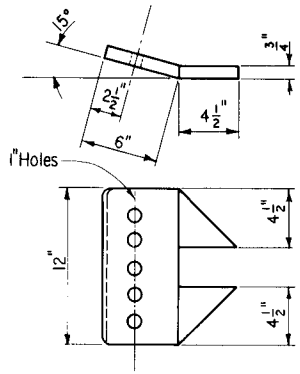

DETAIL (A)

MAKE 1 AS SHOWN & 1 OPPOSITE
SCALE 1 1/2" = 1'-0"

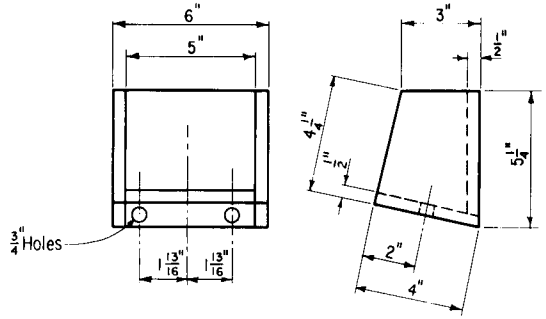

DETAIL (C)

MAKE 1 SCALE 3" = 1'-0"

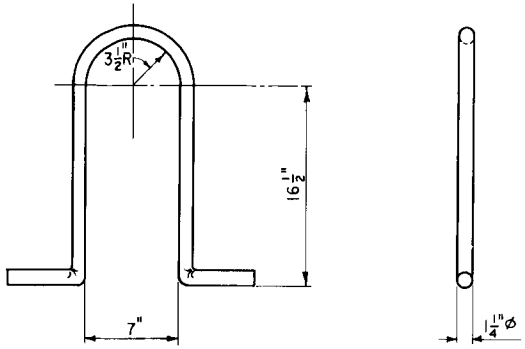

DETAIL (E)

MAKE 1 SCALE 1 1/2" = 1'-0"

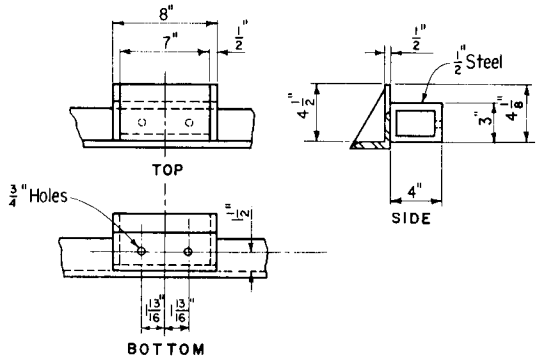

DETAIL (B)

MAKE 4 SCALE 1 1/2" = 1'-0"

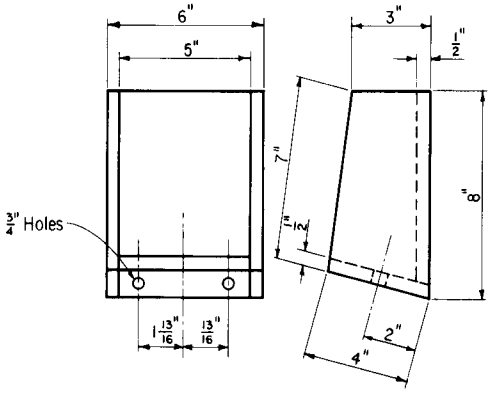

DETAIL (D)

MAKE 2 SCALE 3" = 1'-0"

MATERIAL LIST

No.	Quan.	Description
1	4	3" x 3" x 1/2" L x 46" Long
2	4	" " " " " 43 1/2" "
3	2	" " " " " 46 1/2" "
4	2	3" x 3" x 1/2" L x 54" Long
	8	BEARING SPOOLS
	8	BEARING CAPS
	8	BEARING BOTTOMS
	4	GANG BUMPERS
	4	GANG WASHERS
	4	1 1/8" NUTS
	16	5/8" x 5" BOLTS W/NUTS
	4	LOCK WASHERS
	4	±21" GANG BOLTS 1 1/8" □
	4	28" x 1/4" NOTCHED DISC.
	4	24" x 1/4" NOTCHED DISC.

IMPERIAL IRRIGATION DISTRICT
ENGINEERING SECTION
IMPERIAL, CALIFORNIA

NOTCHED VEE DISC

ISSUE 3	DATE 1-19-71	SCALE NOTED
ISSUE 2	DRAWN W. F.	CHECKED
ISSUE 1	APPROVED	

SH. 4 OF 4

Figure 122

Figure 123

Figure 124

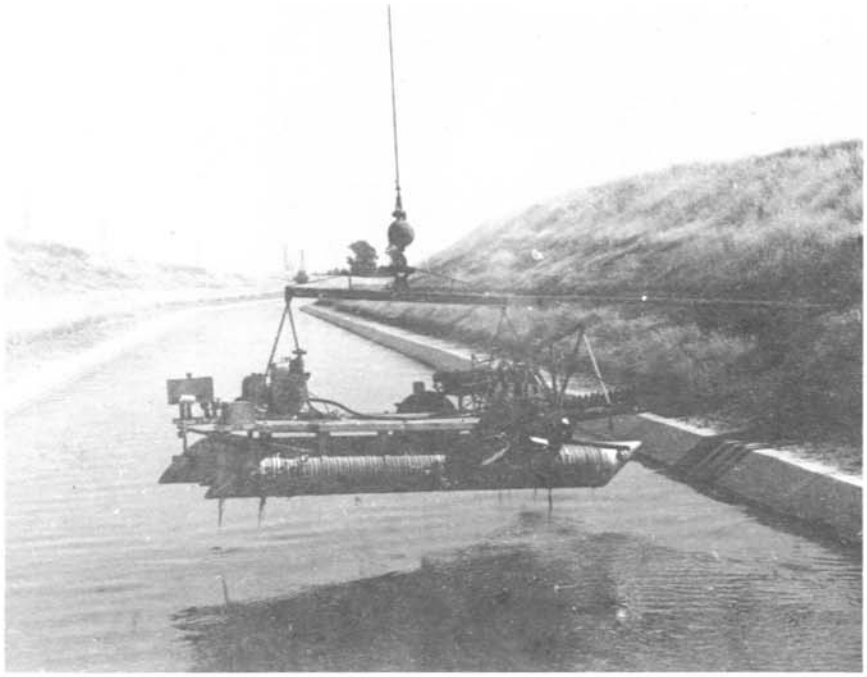

Figure 125

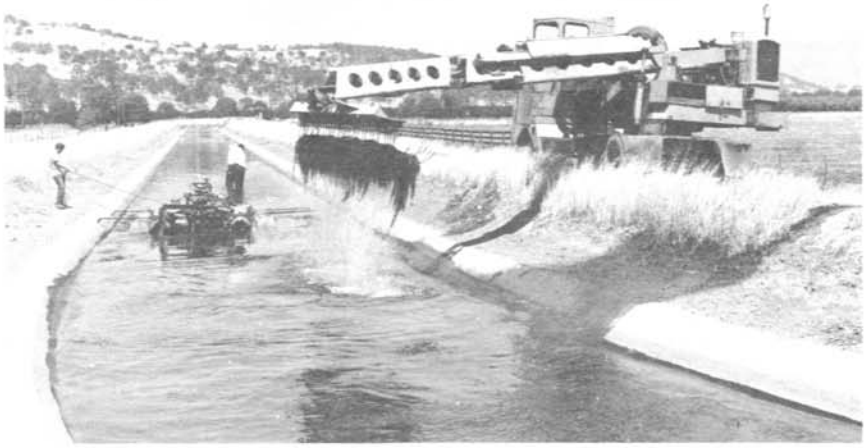

Figure 126

The cutter is hydraulically operated. It is propelled by paddle wheels - one on each side of the rig. Steering is by friction on the paddle wheels. The cutting equipment consists of two vertical sickle bars and one horizontal sickle bar; it can cut growth to a depth of approximately 7-1/2 feet.

A mobile crane is used to place the cutter in or remove it from the canal, as shown in figure 125. Figure 126 shows the cut growth being removed from the canal by a Gradall with fork.

Controlling Silt Accumulations and Pondweeds

Many laterals of the Columbia Basin project are required to carry their maximum capacity for extended periods during the irrigation season. Meeting this requirement may be impaired by obstructions such as silt accumulations. Growth of pondweeds contributes to this problem by obstructing flow, thus reducing velocity so that silt suspended in the water settles out. Silt accumulations may also start erosion of the channel around such obstructions. This is especially true in contour laterals. Figure 127 illustrates the condition described.

Figure 127

The silt accumulations should be removed so that the channel will be clean at the beginning of the irrigation season. This is usually done by mobile excavating equipment with as little bank disturbance as possible. The possibility of breaking up the silt accumulations

and the established pondweed root systems without removing the silt was considered. The silt would be flushed through the channel. The advantages of this are: (1) disturbing the pondweed roots would hold back regrowth the next season; (2) spreading out the silt would permit it to be carried along in moving water and result in silting of seep areas to diminish lateral losses; (3) eliminating the necessity of removing the silt bars would save spoil spreading, grass seeding, and control of weed growth on the excavated material.

It was suggested that a cut-down blade on a small dozer be used to break up the silt accumulations and pondweed root systems. This is not an entirely new approach in the maintenance of this type of channel, but equipment to accomplish the work had to be developed. Track equipment with adequate power and yet of small enough size to work in laterals of 5- and 6-foot bottom widths was needed. A tractor with the necessary power and traction has a dozer blade 9.5 feet in width. The long blade cannot be used in the bottom of a 6-foot lateral, and on side slopes it removes grass above the waterline and digs into the bottom of the channel. To solve this problem, a surplus dozer blade was cut down and mounted at an angle so that the width of the blade is the same width as the dozer tracks. Figure 128 shows the dozer in operation, and figure 129 shows the finished job.

Savings from this suggestion have resulted in reduced cleaning costs and benefits from silting in seepage areas, pondweed control, and costs saved in disposal, seeding, and weed control on excavated material. One man with a tractor and cut-down blade cleaned 29 miles of lateral in 9 days. By comparison, the excavator usually used for this type of work required an operator, an oiler, and 20 days' time to clean the same 29 miles of lateral. The cost saving was sizeable. In addition, it was estimated that the extra cost involved following cleaning to spread the spoil piles, reseed the grass stand, and carry out extra weed spraying would have required another 10 man-days. A reduction in the amount of xylene necessary for pondweed control has resulted from use of this method. The effectiveness of this innovation and the results of the work have proved very worthwhile on the Columbia Basin project.

Concrete ditch cleaner. - The Imperial Irrigation District has over 450 miles of concrete-lined canals; cleaning silt and algae from them has become a special problem.

The concrete ditch cleaner shown in figure 130 was designed for this purpose. The concrete ditch cleaner is pulled down the canal by a truck. The operator rides the ditch cleaner, keeping the wings adjusted to the canal side slope. The wings have rubber cleaning pads attached to them (fig. 131) which scrape the walls of the concrete ditch clean.

Figure 128

Figure 129

Figure 130

Figure 131

The front of the concrete ditch cleaner has an adjustable moldboard, which breaks up the sediment and frees the pondweed. When the concrete ditch cleaner reaches a structure, a backhoe removes all the soil and debris accumulated. A small boom has been added to the truck to facilitate the removal and installation of the concrete ditch cleaner.

The concrete ditch cleaner has proved to be a very fast and economical method of cleaning concrete ditches of the Imperial Irrigation District.

A water-propelled scraper shown in figure 132, was developed for use on the Contra Costa Canal, Central Valley project. Pressure of water against the vertical plank wall, which is cut to fit the shape of the lining, pushes the scraper down the channel. If the water pressure is not sufficient, the scraper is pulled by a truck. Scouring action of the water rushing between the movable scraper blade wings and the lining effectively sluices free much of the debris that is not loosened by the bulkhead which is shaped to fit snugly against the walls.

Figure 132

Scraper for cleaning canals. - A unique scraper for cleaning sediment and algae from the concrete lining of a canal is used by the Metropolitan Water District of Los Angeles, Calif. The scraper was developed by the District and consists of an old track from a tractor onto which scraper blades have been mounted.

The scraper blades are about 6 to 8 inches long and are bolted to the tractor tracks, which makes an articulated section. The length is about 6 feet, and is supported on a bar to which it is attached at three points (at both ends and at the middle). A sling attached to this bar is then pulled from the crane. Special sheaves at the end of the boom were developed to make this possible.

Figure 133 shows the articulated scraper. The frame supports the track at both ends and at the center. The sling is attached to the frame. Figure 134 is a closeup view of the scraper and the hard metal pieces bolted to the track.

Figure 133

Figure 134

Two 25-ton rubber-tire-mounted truck cranes are used continuously to clean the canal linings in the District. The truck cranes drive along the canal operating roads, dragging this particular piece of equipment along the canal lining to remove sediment and algae.

It takes six passes to clean one reach of canal, two passes for the bottom, and two for each of the sides. The passes can be made from either side of the canal.

Scraper and sweeper. - On certain features of the Colorado-Big Thompson project, water flowing through concrete-lined canals contains microscopic plants or filamentous green algae. This algae will thrive the year around in a canal when the waterflow and sunlight are sufficient to maintain growth. To impede the growth of this algae, copper sulfate solution is injected into the canal every 2 weeks.

Once each year the Pole Hill Canal is drained and the accumulation of dead algae is cleaned from the lining slopes. Figure 135 shows the canal during cleaning operations. Shown is the typical amount of dead algae that accumulates in the canal each year, which caused a serious cleaning problem prior to the fabrication of a scraper and sweeper.

The *disk scraper* consists of 12 blades, as shown in figure 136. It has two rows of six blades each, of the type used on farm disks, attached to a metal frame with a bolt and coil spring arrangement to permit individual vertical blade movement on uneven surfaces.

Figure 135 also shows how the scraper is used on the surface of the canal. This scraper should be used as soon as possible after the canal is drained, since the algae scrapes off easier when wet. The algae still adhering to the concrete, when dry, will be brushed off with the sweeper.

The *sweeper assembly* as shown in figure 136 consists of a row of 14 straight-back, 7-1/4- by 2-1/4-inch wire brushes and a row of six fiber-bristle stable brooms, 3-1/2 by 16 inches, attached to a wooden frame.

Figure 137 shows the sweeper being placed in operation in the canal from which algae has been removed by scraping, after the algae has dried and has begun to curl. About 24 hours are required for that portion of the algae still adhering to the concrete to dry sufficiently for brushing.

Figure 135

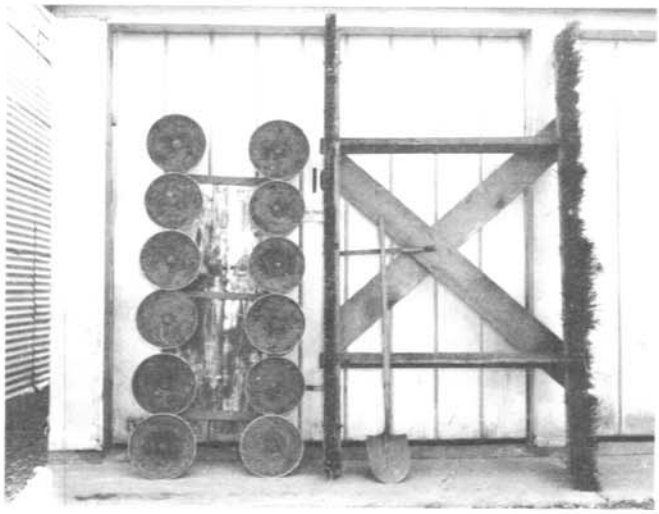

Figure 136

Figure 137

WEED REMOVAL AND DISPOSAL

The Problem

Weeds which enter a waterway or which become detached after growing in a waterway must be removed from the irrigation system to prevent their collecting at structures, causing overflows and the washing out of banks. They also interfere with water deliveries. The delivery of clean water has become very important as sprinkler irrigation and the delivery of municipal and industrial water has increased.

A problem with tumbleweeds is illustrated in figures 138 and 139. The removal and disposal of dead weeds from the channel is necessary before water can be delivered. They may be rapidly burned with motorized burners; however, the fine, charred debris that remain may clog pumps of certain types and may initiate sediment bars, which favor growth of pondweeds. Such channels are usually flushed thoroughly with water before deliveries are begun.

Figure 138

Figure 139

Equipment for disposal of dead or detached weeds may be incorporated in the same equipment used for mechanical control. Devices, machines, and structures described in this section include buckets for heavy motorized cleaning equipment, trashracks, diverters, and weed traps. Some of the devices described in the preceding sections of this bulletin also may play a part in weed disposal.

The diversion of weeds into larger channels and wasteways is sometimes practical. Where there are pumps in the system, the vegetative debris must be removed from the trashracks; often this must be done by hand. Unattended or semiunattended pumping stations must of necessity become attended stations unless: the weeds can be prevented from occurring; they can be divided into such small pieces that they are no longer a problem; or the disposal of weeds is made semiautomatic. Self-cleaning trashracks are only semiautomatic. Weeds are removed from the rack, but they must be destroyed or hauled from the site.

Disposal of Dry Weeds by Burning

Dry weed burning using LP gas is a disposal process which can be accomplished in an unlined channel where windblown tumbleweeds collect, or on the banks where weeds have not been prevented or controlled.

Hazards of burning include the escape of the fire to dry range grasses and damage to flammable structures. The burning of dry weeds is a once-over job, but a strong wind can create a new job overnight by loosening tumbleweeds and carrying them into the channels.

Burning of loosened weeds in channels is aided by air movement. Burning of dry weeds rooted in place may be aided, but is as likely to be hindered, by air movements.

The total amount of heat necessary to ignite dry weeds varies with the moisture content of the weeds, but it is much less than that required for green weed burning.

Much of the dry weed burning is intermittent. Oil or LP gas burners, described previously under the section on Weed Control, are effective, especially if igniter devices permit the main burners to be turned on or off as required. A pilot light or other form of remote igniter is useful for the ignition of burners on long booms.

Long booms and vehicles capable of moving rapidly are essential. The long booms permit ignition at the bottom of long slopes or across channels. A vehicle capable of moving at least 10 or 15 miles per hour is a safety feature. Updrafts, flash fires, and abrupt changes in wind direction may cause accidents if the men and equipment cannot be rapidly moved.

Figures 139a, 139b and 139c show two burners used on the Columbia Basin project to burn dry weeds in and along the canals and laterals prior to filling each spring. The burner in figure 139a uses *propane* for fuel and the *silver jet* burner shown in figures 139b and 139c uses diesel oil for fuel.

Weed Traps

Wire weed traps. - An inexpensive and simple weed trap to collect weeds and debris in an irrigation canal can be constructed of smooth wires placed at an angle to the waterflow, which diverts floating material into a pocket or trap along the banks, as shown in figures 140 and 141. This weed trap was designed and constructed by personnel of the Tucumcari project, N. Mex.

The weeds are guided into the trap by smooth, No. 9 galvanized wires which are strung 4 inches apart across the ditch at an angle of not greater than 20° to the channel alinement. The wires are placed parallel in a vertical plane from a few inches above the water level to about half the depth of the canal. Bracing with guy lines is suggested to prevent bending of the 2-inch pipe upright and to keep the wires tight.

The trap or pocket, constructed of woven wire, may be of any width and may be extended for some distance parallel to the ditchbank. Debris is removed from the trap by using a weed fork mounted on a mobile crane. In this manner, the accumulated weeds are removed quickly at a fraction of the cost of hand labor.

Weed diverter improvement. - One of the problems in operating the weed diverters on the Royal Branch Canal of the Columbia Basin project, was weed debris hanging up at the wire support posts. The diverters were installed to facilitate quick, efficient weed removal at a few convenient places where equipment would have ready access. Otherwise, weed jams could occur at inaccessible locations.

It was suggested that a baffle-type effect be created to decrease the water velocity at the support posts. The sketch (figure 142) shows the application. Actual field tests of this suggestion have shown that a weed sliding along the wire will move away from the wire as it

Figure 139a

Figure 139b

Figure 139c

Figure 140

Figure 141

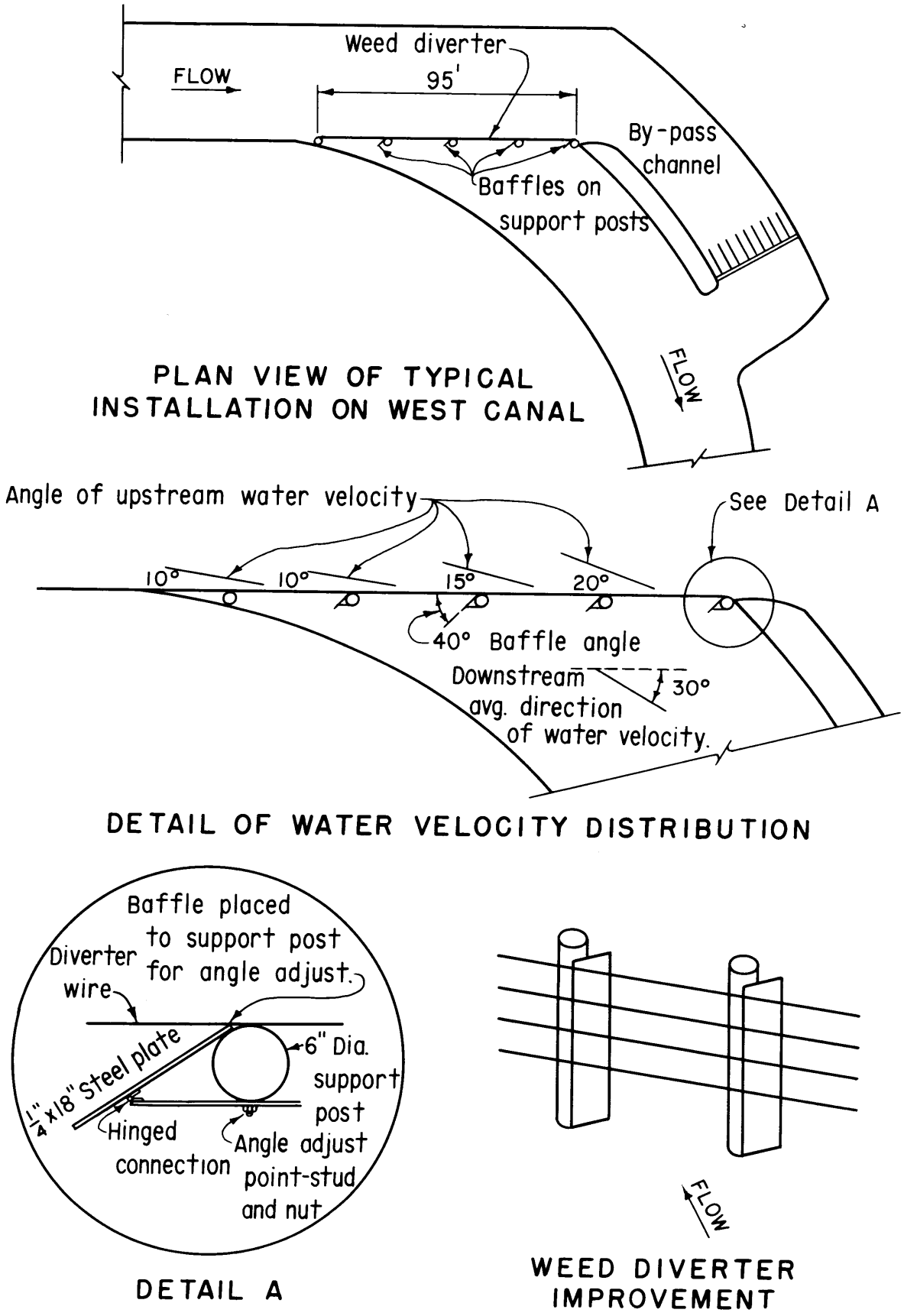
Weed diverter
95'
FLOW
By-pass channel
Baffles on support posts
FLOW
PLAN VIEW OF TYPICAL INSTALLATION ON WEST CANAL
Angle of upstream water velocity
See Detail A
10°
10°
15°
20°
40° Baffle angle
Downstream avg. direction of water velocity.
30°
DETAIL OF WATER VELOCITY DISTRIBUTION
Baffle placed to support post for angle adjust.
Diverter wire
6" Dia. support post
1/4" x 18" Steel plate
Hinged connection
Angle adjust point-stud and nut
DETAIL A
FLOW
WEED DIVERTER IMPROVEMENT

Figure 142