WATER OPERATION AND MAINTENANCE

Bulletin No. 94

DECEMBER 1975

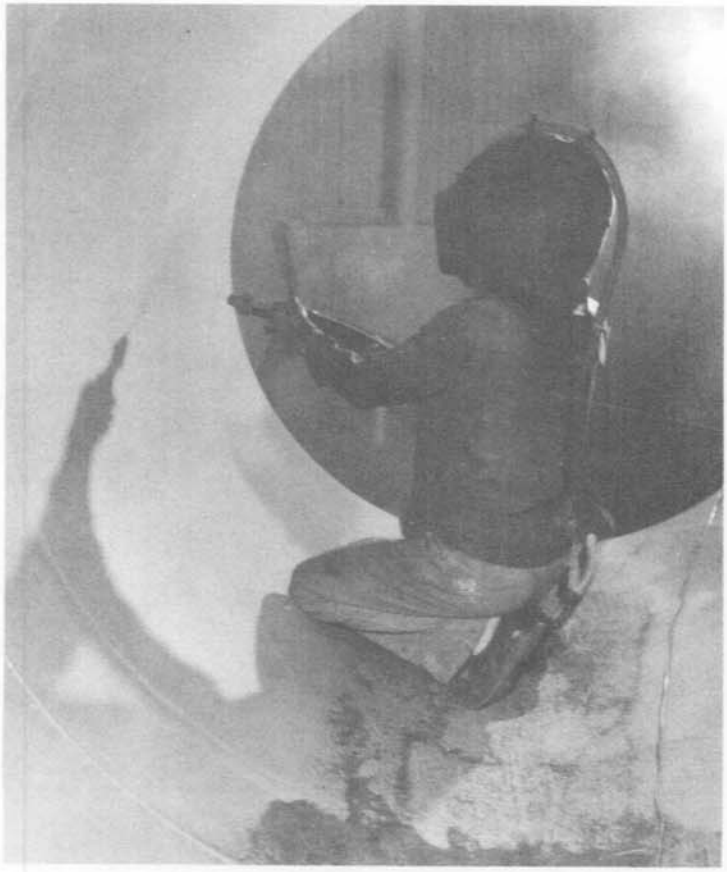

IN THIS ISSUE

Effective Maintenance Painting
Repairing Aluminum Irrigation Tubing
Safety Tips For Irrigators
Valve Lid Vandalism
A Low-Cost Shutoff Valve
Energy Conserving Enclosure

United States Department Of The Interior

Bureau of Reclamation

The Water Operation and Maintenance Bulletin is published quarterly for the benefit of those operating water-supply systems. Its principal purpose is to serve as a medium of exchanging operation and maintenance information. It is hoped that the reports herein concerning laborsaving devices and less costly equipment and procedures will result in improved efficiency and reduced costs of the systems for those operators adapting these ideas to their needs.

To assure proper recognition of those individuals whose suggestions are published in the bulletins, the suggestion number as well as the person's name is given. All Bureau offices are reminded to notify their Suggestions Award Committee when a suggestion is adopted.

Any information combined in this bulletin regarding commercial products may not be used for advertisement or promotional purposes and is not to be construed as an endorsement of any product by the Bureau of Reclamation.

* * * * *

Division of Water Operation
and Maintenance
Engineering and Research Center
Denver, Colorado 80225

COVER PHOTOGRAPH:
Sandblasting operation by a water district employee, depicting good surface preparation before coating is applied. This is essential for all underwater coatings. See section on surface preparation in first article on page 2.

UNITED STATES DEPARTMENT OF THE INTERIOR
Thomas S. Kleppe
Secretary of the Interior

BUREAU OF RECLAMATION
Gilbert G. Stamm
Commissioner

WATER OPERATION AND MAINTENANCE
BULLETIN No. 94

December 1975

INTRODUCTION

Starting on page 1, an article entitled "Effective Maintenance Painting," describes various methods of applying protective coatings for the best results.

Interested in repair of aluminum irrigation tubing? The article on page 7 describes two very practical methods for repairing damaged tubing.

By simply observing some basic precautions, many irrigation-related mishaps can be avoided as pointed out in a most informative safety article on page 11.

A short article on page 15 from the Solano Irrigation District in California, describes how they have virtually eliminated pilfering of their valve covers with one simple inexpensive idea.

The very practical low pressure shutoff valve shown here on pages 16 and 17, is easy to operate and inexpensive to install.

A timely energy conserving suggestion from the Colorado River Storage Project, Colorado, New Mexico, entitled "Energy Conserving Enclosure," can be found on page 18.

EFFECTIVE MAINTENANCE PAINTING[1]

Todays rising costs dictate an active corrosion control program for water control structures. The Bureau maintains a coatings and corrosion laboratory with the functions of investigating, selecting, specifying, and testing coatings for Bureau structures, and consulting with and assisting field offices regarding all aspects of their use. We welcome the opportunity to lend assistance with maintenance problems, whenever possible.

Providing effective coating protection depends on:

1. The correct selection of the paint material for the exposure.
2. Quality control of the paint supplied.
3. Correct application.

Regarding coating selection in maintenance painting, a coating which has performed well will usually be reapplied. However, if it failed prematurely, a new selection may be in order. If so, the exposure conditions and other circumstances must be analyzed to determine the cause of the failure.

The importance of quality control may be realized from the fact that rejection has occurred at the rate of 20 to 25 percent of samples tested by the Bureau. Failure to meet the established quality standards by one out of four to five materials submitted for use on Bureau structures points up a very real danger that originally defective materials may lower the durability of the coatings. The Bureau considers that testing is warranted for all sizable quantities of paint.

The present discussion is concerned primarily with the third phase in the coating process, i.e., correct application. However, each of the three phases must be executed correctly. Further, this article concentrates on the painting of metalwork as being the most critical material requiring protection.

Inquiry may be made to Bureau paint specialists on any coating selection, testing, or application problems.

Coating maintenance problems often differ from the coating application problems in new construction, primarily in that the item to be painted is ordinarily in place, may have corroded severely, and may have at least the remnants of an old coating, one which may require maintenance or replacement under adverse circumstances. In new construction, new items are usually painted under much more favorable

---

[1] Written especially for this publication by Hugh F. Adams, Materials Engineer Technician, Division of General Research, Materials Science Section, Engineering and Research Center, Denver, Colorado.

circumstances. It must be borne in mind that, although the circumstances may complicate an application, the same relationship applies between the service obtained and the soundness of the initial application operation. A coating does not try a little harder just because the application was difficult to perform.

Some special problems likely to be encountered in maintenance circumstances should be considered. Winter painting introduces the possibility that part or all of the work may proceed below acceptable temperatures (45° F is the usual Bureau minimum). This may often be countered by moving portable items under cover. Immovable above-ground items can usually be coated at acceptable temperatures if the work is scheduled (and advance preparation completed) for early fall or late spring.

The actual painting (especially the first coat) should be planned so as to start during the warmest part of the day; metal exposed to the sun may get as much as 20° F warmer than the surrounding air. Underground metalwork will seldom be as low as 45° F. However, in many such locations, the air can be heated to increase the drying rate. The plans for the application should include extended drying time when temperatures for the curing can be expected to average substantially below normal (say 70° F).

In some cases other aspects of painting conditions can create problems; for instance, ventilation and humidity control. Positive movement of air is sometimes almost mandatory in underground painting to exhaust paint fumes for drying and to keep the area habitable to painters. Bulkheading to isolate an area and fans and vents placed in the bulkheads to control the air may be indicated. Underground metalwork sometimes sweats under these conditions and this must be prevented or fresh sandblasting and newly applied paint may be affected. Sweating (moisture condensation) occurs because the dewpoint is reached (even though only at the surface of the metal). Drawing moist, relatively warm air through a cold pipe is the most common cause. Remedying the situation is usually a matter of experimentation; heating the air and slowing its movement will often help. Operations may have to be suspended and the work area sealed up during rainy weather. Sources of moisture along the path of incoming air should be avoided, such as ponded water or moist areas at the lower levels of a structure.

Surface Preparation

The surface preparation operation is considered at least as important a part of painting as the phases later discussed, but one which is often slighted because of the difficulties involved or through lack of understanding of its function. The methods vary as to purpose, effectiveness, convenience, and cost. The method selected must foremost be effective for the purpose, with convenience and cost secondary.

There are several levels of surface cleaning and methods of accomplishing them.

Maintaining an aged coating which requires one or two topcoats to extend its service life, merely requires the removal of foreign substances. Scum and dirt are usually the materials to be removed, and vigorous scrubbing with stiff brushes and a detergent soap solution (followed by thorough rinsing) may suffice. Other contaminants, if present, must be removed by appropriate means, since any barrier to proper adhesion of the topcoats will reduce the value of the work performed.

In preparation for paints to be used in atmospheric exposure (and specifically not for those in underwater use), effective cleaning must remove all loose material from the surface, usually by wire brushing, chipping, or scraping. In new construction, it is assumed that no coating is present. This may not be true in maintenance work, and, if previous paint has failed in adhesion (peeling, flaking, lifting) a cleaning method such as scraping may be preferred to wire brushing which would leave behind large areas of poorly bonded old paint; the latter might soon cause premature failure of the repaired coating. Of course, sandblast cleaning would produce better and faster results.

Cleaning for all underwater coatings requires sandblasting in order to remove all obstacles for the best chemical and physical adhesion of the coating. No coatings we know of will dependably give long service in this exposure without the most thorough surface preparation.

A small sandblast unit may be a valuable addition to the equipment of an irrigation district. At moderate equipment cost (exclusive of compressor), the district not only can perform sandblast cleaning where it is essential, but can reduce the cost and increase the quality of other applications. Further, thorough cleaning of cracks and grooves in concrete canal linings is essential before placing joint filler material if good service is to be obtained, and sandblasting is generally the most practical and economical method of accomplishing this where sizable areas are involved. Blasting similarly is best for cleaning concrete of old coatings, particularly curing compound, over which coatings will not perform satisfactorily. The many uses of a small commercial sandblast unit thus warrants its serious consideration where coating maintenance is a continuing problem.

A problem arising repeatedly in maintenance work occurs when a coating in submergence exposure must be repaired or replaced but, because of the physical circumstances, sandblasting is clearly out of the question. It must be recognized that reduced service can be expected from a new coating applied after substandard surface preparation, and strenuous efforts should be made to circumvent this situation. However,

where it arises, the next best alternative consists essentially of wire brushing, chipping, or scrapping, plus a metal conditioning solution prior to application of paint. The metal conditioner, a phospheric acid solution, tends to consume residual rust and deposit a thin iron phosphate salt on the metal surface; the latter temporarily inhibits rusting of unpainted metal and may improve bond of, and inhibit rusting under the applied paint.

The above methods of surface preparation usually are listed in Bureau construction specifications as methods A, B, C, and D.

High-pressure water blasting is a relatively new surface preparation method for which equipment is now becoming widely available. A trailer-mounted rig about the size of a 250-ft^3/min compressor can produce pressures up to 10,000 lb/in^2 which, for example, are capable of cutting into concrete. Water blasting at lower pressures has been used for cleaning lifts of dam blocks preparatory to the next pour (6,000 lb/in^2), cleaning the upstream face of a small dam prior to application of a coating (2,000 lb/in^2), and cleaning aluminum paint before applying maintenance topcoats (500 lb/in^2). It has been used by others for extensive cleaning of masonry buildings and for a wide diversity of other purposes. A major advantage of this method is that water is a highly available and disposable, ecologically acceptable "abrasive" under most circumstances. It is suggested that renting a water blasting outfit be considered when this method seems appropriate. This office will be glad to provide the latest available data and discuss any particular potential water blasting situations.

Mixing or Other Preparation of the Paint

One would not deliberately tamper with the formulation of a paint and then expect the service normally given by that material; such tampering will usually decrease its serviceability. The intent should be to preserve the balance of vehicle, pigment, and thinners as originally supplied by the paint manufacturer. Simple mixing techniques will suffice, involving cutting any settled materials from the bottom of containers, stirring them until a smooth consistency is achieved, and boxing the paint to insure that all constituents are uniformly distributed. Mechanical mixers facilitate this tiring work and usually do a better job. A stirrer in an electric drill works well. Some paints which settle rapidly require frequent reagitation.

Thinning of some paints is permitted, usually to a maximum of about 1 pint per gallon. However, the practice is to be discouraged. Much more desirable alternatives to thinning include warming the paint in cold weather, and providing the specified equipment (such as, the correct spray gun tip and air cap sizes). Some of the newer paints now coming into widespread use have added a new complication to paint preparation. These paints set largely or completely by chemical reaction, which reaction begins when a "catalyst" or "accelerator"

is added to the paint. Thorough distribution of this additive into the paint is imperative and halfway measures will not do. Also, thinning beyond that recommended by the manufacturer may ruin the paint and cannot be tolerated.

Brushing the first coat is required for most paints since working the paint tends to insure intimate contact of paint and metal and it also stirs minute amounts of dust into the paint and away from the surface, thus minimizing the threat to proper adhesion. Brushing must be skillfully done if all the surface is to be covered with a reasonable degree of uniformity. A tendency to brush most paints too thinly may be recognized as poor economy since a given dry film thickness is the objective; a thin first coat may cause a later additional, and otherwise unnecessary, coat to achieve this thickness.

Roller coating, where applicable, accomplishes much the same desirable effects as brushing and, in addition, usually provides greater uniformity and speed.

Spray painting, usually specified or permitted for second or later coats, offers the considerable advantage of relatively uniform application of thicker and more continuous films at substantially higher rates. On the other hand, spraying properly requires specialized skill and the correct equipment in good condition. Adherence to the recommended gun part sizes for each type must be observed and the equipment cleaned after use. A highly skilled spray painter can be recognized by this technique: gun held 8 to 10 inches from and normal to the surfaces, lapping uniform (such that measurement shows little variation in thickness), systematic pattern for coating an area, and the absence of several bad habits typical of mediocre spray men. He will also understand correct adjustment of the equipment to give a properly atomized spray fan, uniformly distributed and without excessive overspray. He will be careful to see that the paint is deposited as a wet coat, never partially dried before it reaches the surface.

The overall competency of a spray painter influences the quality of the applied film, especially in coating irregular shapes where paint thickness cannot readily be measured. Continuity of most Bureau coatings is insured by specifying that three or more coats be applied, but even then, careless workmanship may cause skips or thin areas. Spray techniques and equipment assume special importance with some of the new catalytically set paints which require cross-spraying of two passes with a time delay between; manufacturer's recommendations must be followed rigorously with these materials.

Curing

Most paint films fail to develop their full protective capabilities unless adequately dried or cured. It is realized that schedules for some operations sometimes severely restrict time available for

painting; however, the effort expended in painting will be largely or completely wasted unless sufficient time is provided. Planning well in advance should aid in scheduling adequate time for curing or in permitting acquisition of special equipment such that the cure can be forced. Introducing heat or brisk air circulation can expedite curing materially. Where items too large to heat are exposed to winter temperatures, the work can sometimes be scheduled for a seasonal outage of long duration for curing. Time-temperature tables govern the curing of the chemically set paints and must be followed carefully; however, these paints will usually be impractical if the temperature during curing cannot be held above the stated minimum (usually about 50° F).

It is recognized that most maintenance painting involves special individual problems which cannot be covered in this brief discussion. Procedures and comments on the characteristics of Bureau applied paints are detailed in the Paint Manual, which is recommended reading when painting is planned. Assistance with individual problems is available from the Division of General Research, Code 1521, Engineering and Research Center, Denver, Colorado 80225.

* * * * *

RECLAMATION CONTRIBUTES TO FISH AND WILDLIFE CONSERVATION

Fish abound in lakes behind Reclamation dams and in regulated rivers downstream from the dams. Because this water generally is stored in arid areas, the shore areas are havens for wild game. Many wildlife refuges have been established on Reclamation reservoirs and as a part of Reclamation projects.

Reclamation cooperates closely with the State fish and wildlife agencies which regulate fishing and hunting in these areas. Fish hatcheries also are constructed by Reclamation to increase fishing opportunities. Water is provided to marshlands for waterfowl, and reservoir releases are coordinated with project needs to benefit fish, birds, and wild animals.

Cover for game birds is provided by irrigated cropland which was formerly dry desert.

Department of Interior News

REPAIRING ALUMINUM IRRIGATION TUBING[1]

Damaged aluminum irrigation tubing can be repaired economically, and satisfactorily, with materials available off-the-shelf in most localities. Two different repair methods, one adaptable to small hole repair, the other adaptable to either small or large holes, is described.

To repair small holes, epoxy cement, a small piece of flexible aluminum sheet, and a short length of flexible wire are needed. The repair patch is cemented to the inside of the damaged tubing with the epoxy cement.

The repair procedure can best be described by reference to the following photographs. Figure 1 shows small hole damage of 3-inch aluminum irrigation tubing. The dent around the hole was removed by sliding a heavy pipe inside the tubing, positioning the tubing with the hole down, and pounding upward on the tubing until the dent was removed. The original hole was enlarged to an oval with a rotary file in a small electric drill and a round file. The inside of the aluminum tubing around the enlarged hole was smoothed and cleaned with a file and emery cloth. After the hole was shaped and cleaned, an oval patch was cut from a sheet of soft aluminum. The patch was then curved to fit the pipe. The patch should be about one and one-half inches wider and longer than the hole, its width must not exceed the length of the hole. A piece of copper wire was cemented to the center of the patch with epoxy cement, as shown in figure 2. When the epoxy cement had set, the wire was bent parallel to the long dimension of the patch. The patch can then be inserted through the opening and rotated inside the damaged tubing to cover the hole, see figure 3.

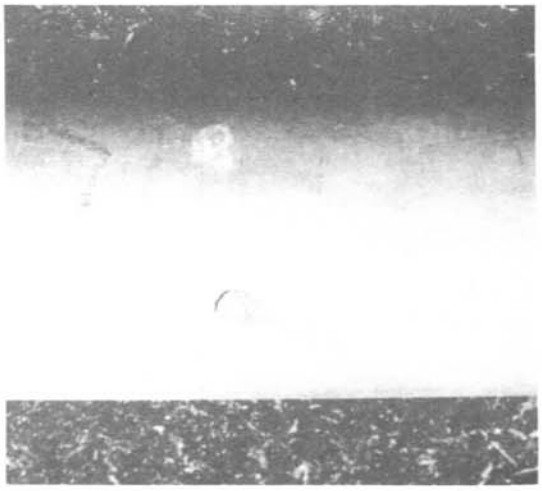

Figure 1

After it was determined that the patch could be inserted into the damaged tubing, the patch was removed and epoxy cement applied to the outside of the patch and inside of the tubing. The patch was again

---

[1] Printed by special permission of the editor, from the Irrigation Journal, dated March/April 1975. Written by Mr. Hollis Shull, Agricultural Engineer, U.S. Department of Agriculture, Morris, Minnesota.

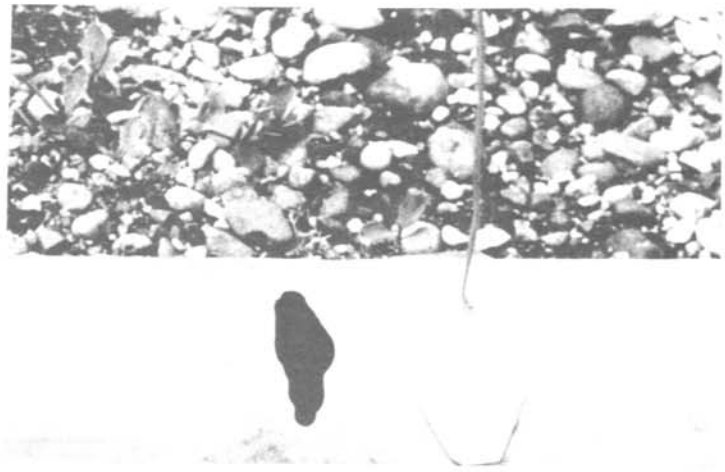

Figure 2

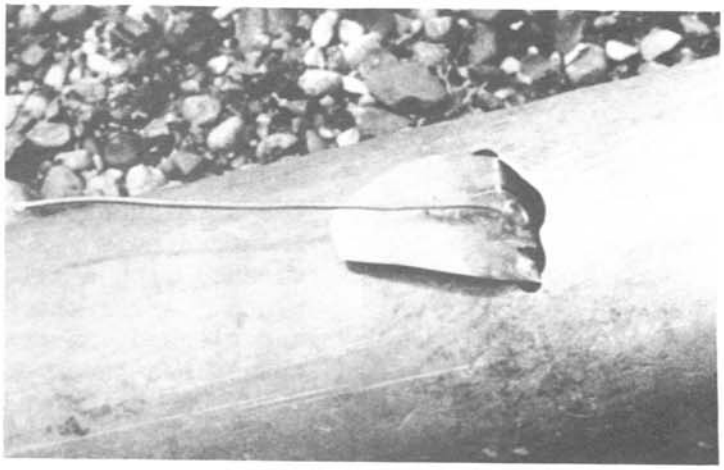

Figure 3

Figure 4

inserted through the hole and positioned to cover the opening. After the patch was in place, the irrigation pipe was rotated to put the patched section down, and supported a few feet above ground. Weight was attached to the wire to hold the patch in place while the epoxy cured. After the epoxy had cured, the wire was cut off close to the patch, as in figure 4.

The repaired section of tubing was used successfully during the summer of 1974 as part of the main line to a small sprinkler irrigation system with about 40 psi pressure. The cost of materials for the repair, in mid-1974, was less than $2.00.

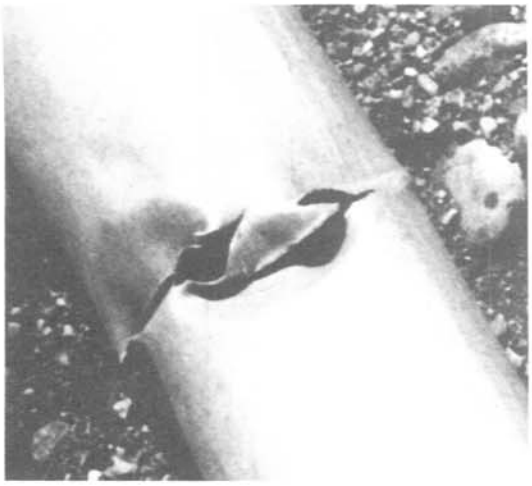

Figure 5

A large hole in a section of four-inch tubing, shown in figure 5, was repaired with fiberglass cloth and polyester resin purchased from a local marine supply company. The dents around the hole were removed, and the hole reshaped by the method previously described for the three-inch tubing. About one foot on each side of the hole on the outside of the tubing was cleaned with emery cloth, as in figure 6.

The hole was repaired by first applying resin to the tubing for a distance of about 10 inches on each side of the hole. After a piece of fiberglass cloth about 18 inches wide and 2 feet long was impregnated with resin, it was centered over the hole and wrapped around the tubing, see figure 7. The patch was secured with masking tape. The appearance of the patch could have been improved if a piece of wide masking tape had been placed over the hole before the cloth was attached. After the resin had cured, the patching procedure was repeated to give additional strength. Some small pinholes allowed leakage through the patch when it was tested. These pinholes could have been prevented by using more care in preparing the tubing and applying the resin and cloth.

Figure 8 shows the pipe in the main line to a large sprinkler operating at 100 psi pressure. The repaired tubing section with the small pinhole leaks was used during the summer of 1974. Cost of materials for the repair was less than $5.00 at mid-1974 prices.

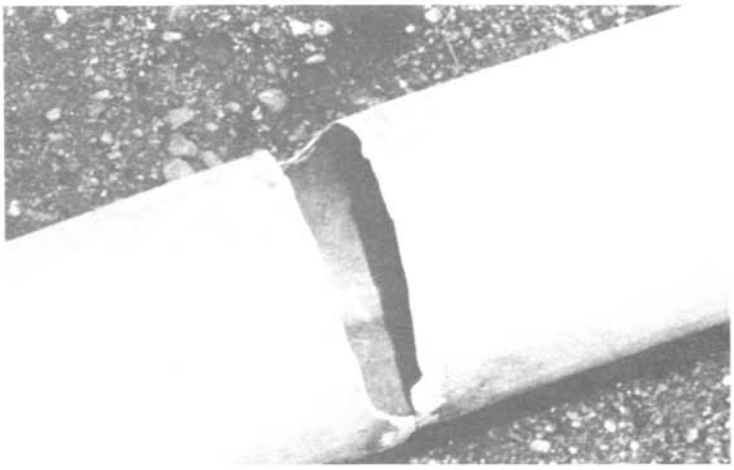

Figure 6

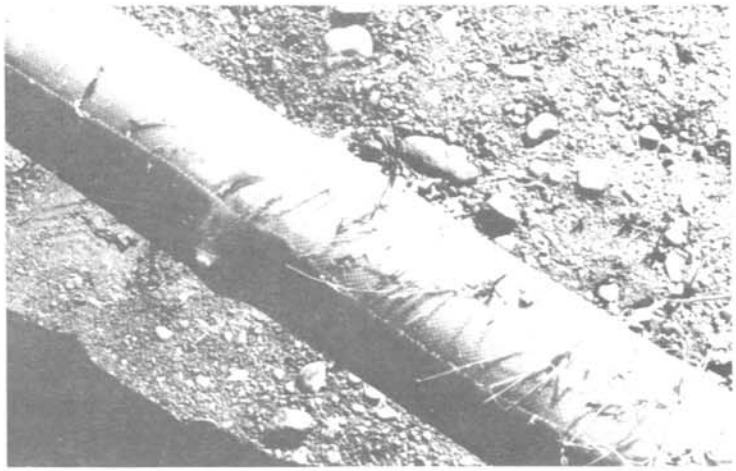

Figure 7

Figure 8

SAFETY TIPS FOR IRRIGATORS[1]

A Nebraska youth, out hunting small game with his father last year, picked up a length of lighweight irrigation pipe in an attempt to flush a rabbit. He inadvertantly touched the pipe against an overhead power line and died instantly. Cause of death---electrocution.

...The 10 year old daughter of a Texas farm worker leaned over for a drink of water from an irrigation pump when a breeze suddenly blew her long hair into the unguarded power drive shaft. The girl, who was instantly scalped, nearly died from her injuries.

...Early this year, a young Georgia farmer brought in a portable power generator to operate his irrigation pump after experiencing a power outage on the farm. He neglected to properly ground the system, and died from electrocution.

...An irrigator was killed in Nebraska last year after falling from the top of a center pivot system. He had climbed to the top of the sprinkler to do some repair work when he lost his balance and struck his head in the fall.

Each of these grim reports has at least one point in common---they all occurred while the victims were handling or using irrigation equipment. Although irrigation-related mishaps account for only a small statistical percentage of all farm accidents, they often result in extensive injury (including disfigurement or dismemberment) or death. By simply observing a few basic precautions, many such accidents could be prevented.

"Unshielded power drive shafts probably account for more accidents related to irrigation equipment than any other single source," says Rollin Schnieder, Extension safety specialist at the University of Nebraska.

The severity of power drive mishaps can range from mild injury to death, but with emphasis on the latter. Schnieder says the individual who has only his clothing ripped off can consider himself lucky. "Too frequently, the victim loses a hand or a foot, or has the skin torn from his back, ribs, stomach or groin. In those cases, death may come only after long weeks of suffering."

Although most pump manufacturers provide shaft guards with their products, the shields are not always installed along with the irrigation equipment. "Unfortunately," says Schnieder, "a supplier or installer

---

[1] Reprinted from the July-August 1975 issue of Irrigation Age, serving those practicing irrigation, and volume producers located in areas under irrigation development.

may overlook the shield when he brings the pump out to the farm. In some cases, a farmer may actually request that the shields be left off. But generally speaking, I'd have to say that most irrigators make good use of shielding when it is provided."

On occasion, a farmer may remove a drive shaft shield while he's making repairs to an irrigation engine or pump, then forget to replace it later. Or he may disconnect the guard because it's become bent or broken through some minor mishap.

"In either case, the shields should be replaced as soon as possible," Schnieder points out. If a drive guard does turn up missing or damaged, a replacement can usually be ordered through the pump dealer."

There are also manufacturers who specialize in making drive shaft guards. One such firm in Hastings, Nebraska, produces three different prop-shaft guards, available in 24 to 66 inch lengths, and 7 inch diameters. The adjustable shields generally attach to existing bolts on the engine and pump, and fit most prop shafts.

"I've also seen homemade shields that cost little more to make than the irrigator's time, but which do just as good a job of keeping people away from a spinning shaft as a manufactured product," reports the Nebraska University safety specialist. "Even a simple fence, designed to keep children and visitors away from the pumping area, is better than nothing."

Schnieder notes that belt-driven pumps also pose special safety problems. "Although it is somewhat more difficult to shield a belt-driven pump, it is by no means impossible," he says.

Overhead power lines represent another leading cause of irrigation accidents and deaths. "The most important thing an irrigator should remember is to look up," Schnieder suggests. "He may be lifting a light piece of pipe to a new location, loading it on a pipe trailer, or transporting an irrigation system to another field. If there's an overhead power line in the way, and the pipe comes in contact with it, death is very likely to result."

Schnieder adds that in some instances, it's not even necessary that the equipment touch a power line to cause electrocution. "If conditions are right, a high voltage spark can jump a considerable gap to travel down a piece of equipment."

Some types of sprinkler equipment, particularly those with rotating arms, may be particularly hazardous around power lines. Irrigators should take special precautions when towing such systems below overhead lines, since water remaining in the lines may cause the system to tip over.

Schnieder reports that a phenomenon called "magnetic flux" is currently under study as a possible cause of irrigation-related accidents. "This problem seems to occur under high-capacity overhead lines, some of which may carry up to 340,000 volts," he explains. "We've noticed that they seem to charge the air with electricity, particularly in irrigated areas where the atmosphere is unusually moist. There have been reports that individuals have been shocked when they passed under the lines, either on foot or aboard a tractor or other farm implement."

Schnieder says this particular problem is still under study, and that no definite conclusions have yet been reached. He and his staff at Nebraska University are presently seeking additional information from farmers who have experienced shocks from "magnetic flux."

Unprotected exhausts, litter, oil cans and other flammable materials are all listed by Schnieder as potential sources of accidents in and around irrigation sites. "Unprotected exhausts can cause burns and, in some cases, start fires," he points out. Uncontrolled weeds, wire, loose boards and other debris around the pumping plant may cause an irrigator to trip. They may also harbor rodents that can damage the working parts of a pumping system.

The Nebraska expert suggests that irrigators follow this list of safety rules to minimize the risk of injury or death to themselves, employees and visitors.

1. Insist that safety shields and safety controls be included in your pumping plant specifications. Make sure they're correctly installed.

2. Operate your irrigation pumps only when the shields are in place. If you have to remove a shield for repair work, replace it as soon as you finish. If you don't have a manufactured shield available, and can't get one, improvise one.

3. Be careful when transporting tall equipment around overhead power lines. Look up before you hoist a length of irrigation pipe. If you can't safely handle the job yourself, wait until you can get help. Watch out for windy conditions when you're wrestling with a long piece of lightweight pipe. The wind can tilt it into a power line before you can catch it.

4. Keep the area around your pump and engine area clean and free of weeds and debris.

5. Keep children and visitors away from all irrigation equipment when possible. Don't allow children to play under sprinklers or climb over equipment. Although you know where the dangers are, they may not.

6. If an accident does occur, be prepared to apply first aid. In the case of electrical shock, follow this procedure:

a. Never touch a person who remains in contact with an electric power source. Push or pull him away with a dry stick (one which contains sap may act as a conductor), or use a dry rope. Make sure you are standing on dry ground. Attempt the rescue only if you are willing to accept grave risk to your own life.

b. If you succeed in freeing the victim, begin artificial respiration at once if he is not breathing. The victim's body may seem stiff as a result of the current, and it may be necessary to continue respiration for several hours.

c. If it is necessary to transport the victim, consider the possibility of internal organ injuries or fractures.

* * * * *

FORMULA FOR SUCCESS

Take the initiative. You won't always be right. But knowing the fundamentals will cut your margin of error to a minimum.

Actively seek all of the responsibility you can possibly handle. You'll never get anywhere by avoiding the tough assignments.

Develop the instinctive ability to make quick accurate decisions. Success has always reserved its greatest rewards for men of action and courage.

Broaden your knowledge in a systematic, organized way; learn the problems and viewpoints of all major departments.

James M. Jenks, President,
Alexander Hamilton Institute

* * * * *

VALVE LID VANDALISM

A unique idea to prevent vandalism of valve lids and also covers on air relief valves, etc., now being used by the Solano Irrigation District, Vacaville, California, has proved to be a most worth while project.

The photograph (figure 9) shows a closeup view of an Irrigation Turn-out valve lid with the initials S.I.D. branded on the lid. This branding was done by the shop welder and the District has stated that the branding has practically eliminated vandalism of the covers altogether. The covers were being taken by others who were using them for their own purposes, and the District is now able to keep the valve lids in their proper position.

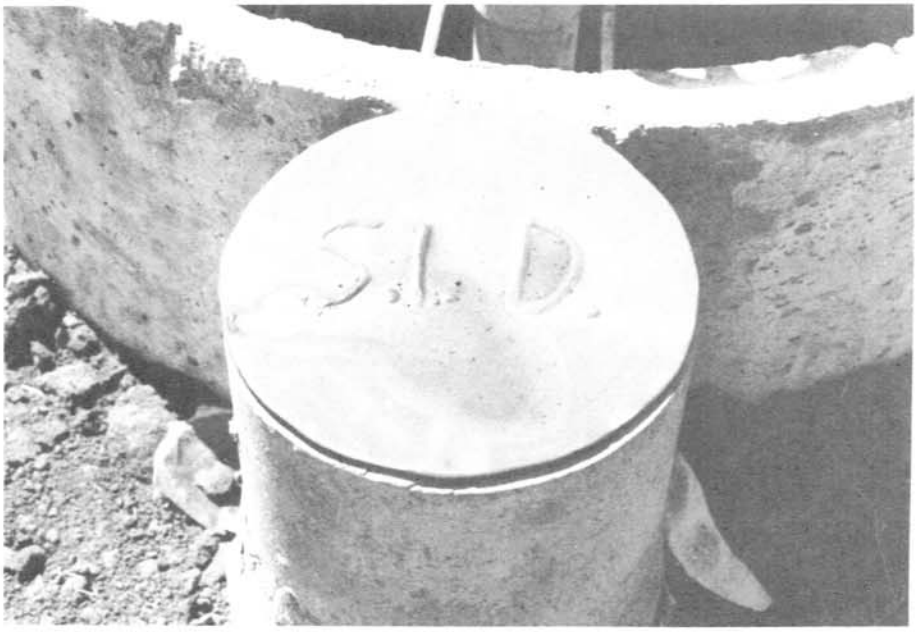

Figure 9

If additional information is desired regarding this idea, please write to: Solano Irrigation District, 508 Elmira Road, Vacaville, CA 95688.

* * * * *

A LOW--COST SHUTOFF VALVE[1]

This inexpensive liquid shutoff valve for use with low pressure and 2- to 6-inch diameter conduits has many applications in agriculture. Controls in animal waste management and irrigation are prime examples.

The shutoff valve shown here was made by placing a rubber plunger (plumber's friend) over a orifice plate cemented into a plastic-riser pipe. Figure 10 shows a riser inlet and shutoff used in a feedlot with broad-basin terraces. Slight pressure due to liquid head seals the valve. This valve can be used in inlet risers as a shutoff for each debris basin of a feedlot runoff control facility. The rate of water collection in each basin was recorded during runoff events. The inlet risers in the basins were connected to underground lines for conveying runoff to a holding pond.

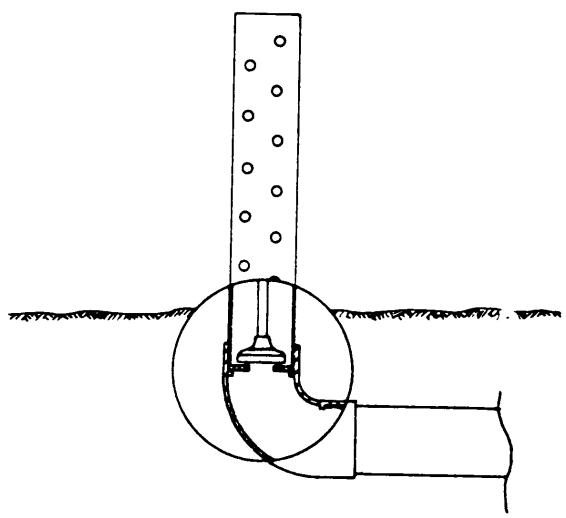

Figure 10

The orifice plate was cut from 3/8-inch plastic (Plexiglas) and cemented into the riser pipe. However a thicker orifice plate could be used. The orifice plate was supported by the shoulder of the fitting. Female polyvinylchloride (PVC) fittings including elbows, tees,

---

[1] Reprinted from the July 1975 issue of Agricultural Engineering, published by the American Society of Agricultural Engineers. Presented by L. N. Mielke, U.S. Department of Agriculture, Lincoln, Nebraska, and J. C. Larimor, Agricultural Engineering Department, Iowa State University, Ames, Iowa.

and couplings have a shoulder smaller in diameter than the inside pipe diameter.

The valve also was used to control gravity discharge of effluent from an animal waste holding pond. Figure 11 shows a cross section of an earth dam and shutoff for draining holding ponds. Located in the center of an earth fill dam the valve consists of an elbow, tee, orifice plate, and the rubber plunger. The open riser to the top of the fill served as an excess port for operating the valve, which could be opened and closed under 7 feet of head. The plunger should be securely fastened to the pull rod. Modification of the plunger would be necessary to operate at greater head or in larger pipes.

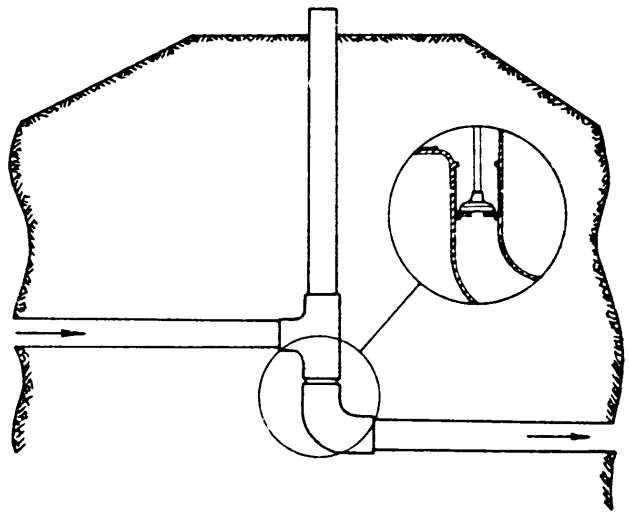

Figure 11

These shutoffs can be fabricated and installed at very low cost in comparison to conventional valves of similar capacity. They are simple, will not corrode, have essentially no moving parts, and the plunger can be replaced at low cost. Discharge can be varied by changing orifice size.

* * * * *

ENERGY CONSERVING ENCLOSURE
(Suggestion No. UC(WCPO)75S-1)

The energy crunch and concern over conserving fuel brought about a method to substantially reduce heating fuel consumption in the valve house at Navajo Dam, Colorado River Storage Project, Colorado, New Mexico. An award was made to Bernard A. Corder, Upper Colorado Region, Western Colorado Projects Office, Grand Junction, Colorado, for adoption of this energy saving suggestion.

Maintaining operating temperatures in the valve house during the cold winter months is an expensive operation and maintenance cost, especially with today's climbing fuel prices. Personnel at the Operations and Maintenance Headquarters at Navajo Dam designed and built the structure as shown, which in effect reduced the amount of open space to be heated.

The valve house is a 30- by 40-foot structure originally having an open space of 28,000 cubic feet. The ring-follower gates and oil supply tanks housed in the valve house are situated at one end and need a reasonably warm temperature to operate properly. Two overhead gas heaters supply the needed heat to maintain the temperature at around 55°. Annual fuel consumption was nearly 3,300 gallons of propane costing around $725, and this cost kept going up as fuel costs became more expensive.

Figure 12

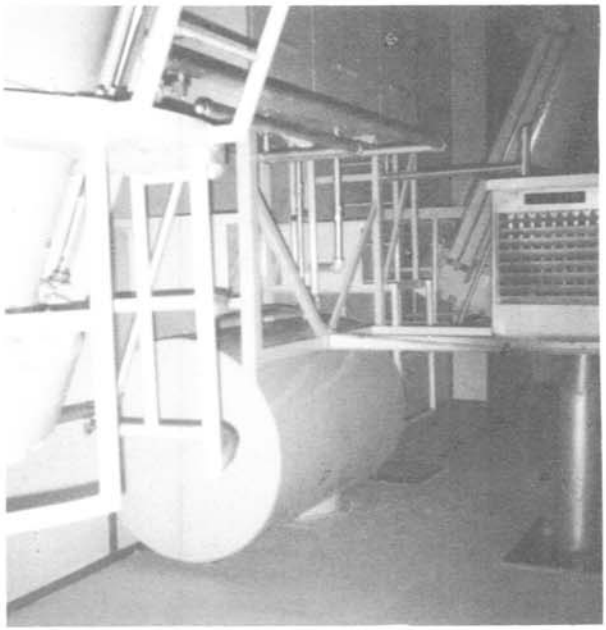

Figure 13

By cleverly sectioning off the space around the ring-follower gates and oil supply tanks with a roof and a wall, the amount of space to be heated was reduced to 7,000 cubic feet - a 75 percent reduction. The wall was built flush with the face of the control panel, allowing easy access to gages and controls shown in figure 12.

Placement of the wall also makes it possible to remove the floor grating in the unheated area of the valve house to allow entrance to facilities beneath the floor.

Figure 13 shows a clear view of the interior of the enclosure with a "snug fit" around the equipment. Gas heaters can now maintain the proper operational temperature around the equipment with a substantial reduction in the amount of fuel used.

The roof and wall were constructed of wood and 3/8" sheet rock. Total cost of the enclosure was approximately $500, but this amount can easily be saved each year in savings on the fuel bill.

If additional information is desired regarding this suggestion, please write to the Project Manager, Western Colorado Projects Office, P.O. Box 1728, Grand Junction, Colorado 81501.

* * * * *

GPO 832-707

The purpose of this Bulletin is to serve as a medium of exchanging operation and maintenance information. Its success depends upon your help in obtaining and submitting new and useful O&M ideas.

Advertise your district's or project's resourcefulness by having an article published in the bulletin! So let us hear from you soon.

Prospective material should be submitted through your Bureau of Reclamation Regional office.