WATER OPERATION AND MAINTENANCE

BULLETIN NO. 92

JUNE 1975

IN THIS ISSUE

WATER OR AIR WHICH DO YOU PUMP
FIRE AND THE USE OF ELEVATORS
EFFECTIVE CLEANING OF LATERAL TRASHRACKS
UNDERSTANDING HYDRAULIC EQUIPMENT
JERRY CAN AND PLASTIC JUG CARRIER
SAND TRUCK BECOMES A SHOULDER SPREADER
EXPLOSION IN GREASE TRAP
OSHA CHIEF WARNS OF "BOGUS" INSPECTORS AND ADVERTISING CLAIMS
OSHA HEAD PROTECTION REQUIREMENTS

UNITED STATES DEPARTMENT OF THE INTERIOR

BUREAU OF RECLAMATION

The Water Operation and Maintenance Bulletin is published quarterly, for the benefit of those operating water-supply systems. Its principal purpose is to serve as a medium of exchanging operation and maintenance information. It is hoped that the reports herein concerning laborsaving devices and less costly equipment and procedures will result in improved efficiency and reduced costs of the systems for those operators adapting these ideas to their needs.

To assure proper recognition of those individuals whose suggestions are published in the bulletins, the suggestion number as well as the person's name is given. All Bureau offices are reminded to notify their Suggestions Award Committee when a suggestion is adopted.

Any information combined in this bulletin regarding commercial products may not be used for advertisement or promotional purposes and is not to be construed as an endorsement of any product by the Bureau of Reclamation.

* * * * *

Division of Water Operation
and Maintenance
Engineering and Research Center
Denver, Colorado 80225

COVER PHOTOGRAPH:
Tracy Pumping Plant on the San Joaquin River, Delta Division, Central Valley Project, California. The pumping plant has six pump units of 22,500 hp each and pumps water for irrigation purposes into the Delta Mendota Canal. Note exterior mounted gantry crane for maintenance of the units.

UNITED STATES DEPARTMENT OF THE INTERIOR
Rogers C. B. Morton
Secretary

BUREAU OF RECLAMATION
Gilbert G. Stamm
Commissioner

WATER OPERATION AND MAINTENANCE
BULLETIN No. 92

June 1975

INTRODUCTION

Efficient operation dictates that no vapors be permitted to enter casings on centrifugal pumps. In this first article starting on page 1, by Mr. Hoeppner, the Western Regional Manager, FMC Corporation, Pump Division, Indianapolis, Indiana, tells of some ways to prevent air from getting into your equipment.

The National Safety Council's timely explanation on the use of elevators in high rise buildings in case of a fire can be found on page 6.

Cleaning trashracks at turnouts can be hard work and hazardous. The article starting on page 7 describes innovative devices used to alleviate these situations.

Understanding Hydraulic Equipment is the title of this very informative article on page 11.

An idea for a jerry can and plastic jug carrier to be mounted inside the bed of a pickup truck is described in an article on page 13.

Personnel at Yellowstone National Park converted a road sanding truck for a dual purpose, as described in the article on page 16, showing that with a little ingenuity seasonal equipment can be used all year round.

Do not dispose of flammable liquids down sanitary or storm sewers, it could be fatal. The safety article on page 17 explains why.

Last but not least are the two short articles on pages 18 and 19. The first article warns about bogus OSHA Inspectors and the second describes OSHA occupational head protection requirements.

WATER OR AIR[1]
WHICH
DO YOU PUMP

Pumping vapors is not the job of centrifugal pumps. Centrifugal pumps, whether horizontal or vertical, are designed solely to pump liquids. Yet, almost everyone who has had anything to do with pumps has experienced the trouble and problems that occur when gas or air gets into the pump in one manner or another.

The problems which occur are many and varied. Some examples include:

The amount of capacity and efficiency reduction varying depending on the amount of air or gas in the fluid, the size and speed of the pump, the type of pump, the number of stages, design characteristics and geometry of the pump.

Air or gas getting into the pump, liquid is displaced so the pump becomes air bound. It stops pumping liquid even though the pump is still rotating. Such a situation can cause severe mechanical damage because the pump normally depends on the pumped liquid for lubrication. Thus bearings, shaft sleeves, shafts, wear rings and even impellers can be damaged or destroyed if the pump is allowed to operate for extended periods in an air or gas bound condition.

Water from some deep wells containing carbon dioxide, and under the hydrostatic pressures involved, the carbon dioxide forms carbonic acid ($H_2O+CO_2-H_2CO_3$). As the water rises in the well and enters the pump, the hydrostatic pressure is reduced thus allowing the CO_2 to escape from solution. It now becomes gas bubbles, and each bubble is enclosed by a highly concentrated film of carbonic acid. This acid actually corrodes the vital metal parts of the pump and causes severe damage.

As the CO_2 bubbles go through the multi-stage deep well turbine pump, they are subjected alternately to low pressure (suction side of impeller) and then high pressure (discharge side of impeller). These pressure changes create a cycle of absorption into the liquid acidic state and then reconversion into carbon dioxide and water. After the gas-entrained water leaves the uppermost pump impeller, which is the highest pressure area, more and more CO_2 gas is liberated because the pressure around it decreases as it rises up the pump column. The rising gas tends to remain in the center of the column pipe and will cling to the shaft enclosing tube in the case of an oil lubricated

---

[1] Reprinted by special permission from the September 1974 issue of "Water and Wastes Engineering." Copyright 1974 by the Dun-Donnelley Publishing Corporation.

pump, or to the shaft in the case of an open lineshaft, water lubricated pump.

Use of a model turbine pump and slow-motion pictures have proved that this released gas collects in circular rings immediately above and below each shaft coupling, and that it will, in time, actually corrode the shaft even when the shaft material is stainless steel.

Corrosion can also occur on the steel column pipe and on the shaft enclosing tube. In fact, actual cases are on record where the carbonic acid mixture has eaten holes through extra heavy tubing within one year.

How Does Gas Get Into The Pump?

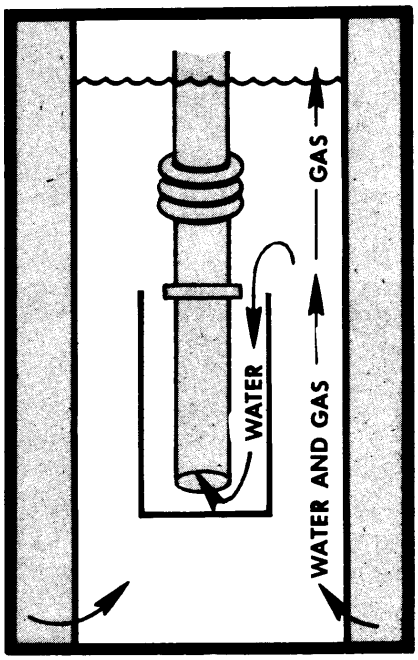

Figure 1

On horizontal water pumps, leaks into the suction piping are the most common source of air entrainment, it is always desirable to install the pump with the centerline as low as possible with reference to the fluid. Suction piping should be direct, as short as possible and constantly rising towards the pump. No high points for air to separate should be allowed. Figure 1 at left, shows how double suction piping prevents gas from entering pumping system.

A "flooded suction" is desirable since the possibility of air entering the pump suction is minimized, and priming problems are eliminated. Of course, most liquids are subject to air or gas entrainment, especially when the system is exposed to the atmosphere and/or is continually being circulated. Packing boxes normally on the suction side, should be properly sealed. A gate valve on the suction side should be arranged with the stem horizontal and seated properly.

What About Deepwell Turbines?

Sources of air or gas in deepwell turbine pumps are more numerous even though the fluid pumped is almost always water.

If a well is constructed so the casing is perforated in water bearing strata areas above the normal pumping water level, water falling from these higher strata entrains air as it falls to the pumping water level. The entrained air then enters the pump suction. The amount

of air entering the pump suction depends on the amount of falling water and the distance it falls before striking the water level.

When a well cannot supply as much water as the pump can produce, the pumping water level is drawn down below the suction inlet. With no water to pump, large amounts of air are gulped into the suction, and the pumping action ceases even though it is still rotating. This condition will continue until the level of water in the well rises high enough to build up enough pressure to clear the air from the pump. Usually, the level of the water must recover to a point above the suction eye of the lowest impeller.

The cycle is repeated as the water level is again reduced to the pump suction. This condition is also known as "pumping off" and is probably the most common source of air in deepwell turbines.

Some geologic formations contain prehistoric vegetation. Free gas can escape from this vegetation and enter the well bore, appearing in large quantities in the well water. This commonly called "marsh gas" has much the same effect on a deepwell turbine pump as entrained air, free gas or dissolved gas. Any gas can cause vapor locking and the other problems previously discussed.

Solving Pumping Problems

To minimize the likelihood of air/gas problems on horizontal pumps, several installation techniques should be observed:

1. An air vent cock should be installed at the uppermost portion of the pump case, and preferably on the high point of the suction as well. Most quality pumps are equipped with a tapped hole in this location for easy installation of such a venting device, since manufacturers have long recognized the potential problems if air or gas is present in the fluid being pumped. Usually, the air vent cock can be operated manually to eliminate air/gas. On occasion, however, when large amounts of air/gas are present, the vent cock must be left partially open at all times. When this is necessary, it is usually desirable to pipe the air/gas/fluid mixture from the vent cock to a suitable sump or drain.

2. Concentric suction increasers should never be used because any air/gas present will tend to collect in a pocket on the high side of the increaser. To prevent the formation of air pockets on the suction side of the pump, always use an eccentric increaser. Air cannot pocket on the high side of an eccentric increaser because the top side is flat, thus leaving no area where air pockets can form.

3. Be sure suction piping is laid out properly so that there are no high spots where air can collect.

4. Be sure all suction piping joints, or connections, are air tight.

Solving Deepwell Problems

Because air/gas problems can be more numerous on deepwell pumps, there are obviously more problem-solving solutions required and available than on horizontal pump installations.

Falling water can be eliminated by proper well construction; i.e, no well casing perforations in upper water bearing formations.

If it is not possible to eliminate such undesirable perforations, and if falling water is still a problem, it is sometimes effective to install baffles on the pump column to reduce the velocity and energy of the falling water. Installing such baffles so they are tight against the pump column and the casing will force trapped water out through casing perforations. This will allow the water to flow down the outside of the casing, reentering the well through perforations closer to or below the pumping water level.

Flotation of ping pong balls, chunks of cork, heavy oil, redwood blocks, etc., on the pumping water level surface will sometimes diminish the effects of the aeration caused by falling water.

A positive method of eliminating falling water is by installation of a liner inside the well at the areas where the falling water is entering. Although use of such a liner may decrease well production, in some cases the actual output of the pump is increased because the air has been eliminated.

Only three solutions are possible when breaking suction occurs:

1. Remove the pump from the well and improve the ability of the well to produce by re-perforating or cleaning out the existing perforations. Several methods for cleaning perforations are available such as dry icing, acidizing, swabbing, and the use of small, controlled explosive charges. This is a whole subject in itself and a competent well driller should be contracted for his recommendations so that the proper results may be obtained without destroying or damaging the well.

2. If possible, extend the bowls further down in the well by increasing the length of the column pipe.

3. Remove present pump and install a smaller capacity unit.

When gas of one type or another is entrained in the well water, numerous devices and methods can be used to separate the gas from the water.

One is a special suction device consisting of a normal suction pipe enclosed in a second pipe. This can only be used where the well is of sufficient diameter to permit entry of the double suction pipe.

As can be seen in the sketch on page 2, gas-entrained water flows up from casing perforations below the pump. The water, being heavier, will fall into the second suction pipe, then enter the pump suction. The gas, being lighter, will not make the two 180° turns required and will escape to the water surface. This simple, yet practical, gas separator is manufactured and sold commercially.

Modifications to the pump itself can be made which may prevent air locking or binding, but will not eliminate air from the pumpage. For example, small holes have been drilled through the upper shroud of the impeller and through the upper portion of the bowl vane casting, the theory being that air will escape through these holes into the pump discharge without displacing fluid, thus allowing the pump to produce a full volume of water.

In some cases, it has been useful to install a high specific speed, high capacity impeller as the lowest stage in the regular bowl unit. Having better NPSH (Net Positive Suction Head) and higher capacity characteristics, it will tend to compress the gas in solution so the regular capacity impellers will have a comparatively gas free liquid to pump. Once the gas bubbles have been compressed to smaller size, the density of the fluid is increased before it enters the regular impellers.

* * * * *

Predictions For The Year 1994

In answer to the question, "What can we expect in 1994?", Dr. Theodore J. Gordon, a "Futurist" consultant and author, formerly with the Rand Corporation, wrote in the June 1974 Futurist magazine that the world will see "...greatly extended use of artificial environments for agriculture, the manufacture of synthetic soil, massive land reclamation projects, polar ice cap and atmospheric monitoring programs, worldwide population laws and standards, increasing prices for water, and a growing consciousness of ecology and the inter-connectedness of the environment and growing organisms."

from
The Washington Report

FIRE AND THE USE OF ELEVATORS

--From National Safety Council Construction Section Safety Newsletter, September 1974

Have you ever noticed the signs in some elevators that indicate "In Case of Fire Do Not Use The Elevators, Use the Stairway." The significance of this warning sign may not be fully appreciated.

The purpose of this sign is not simply to make it difficult on you in case of a fire. This warning sign is put there for a very good reason. The reason is that the control buttons on modern new elevators are heat-activated; that is, the control buttons that you touch in the hallways or in the car are activated by the heat in your finger. Fires in tall buildings have shown that the elevators will be called by the heat from the fire and will go to the floor where the fire is located.

Right now I can imagine your saying: "Boy, that's not the place we want to go in case of a fire," and you're right. The next thing found is that, when the elevator gets to the floor where the fire is located, the elevator doors will open because the elevator's "control-brain" senses there is a "passenger" waiting to get on. Now comes the next problem. The doors are fitted with an electronic eye so that, in case someone is standing in the doorway of the elevator when the doors start to close, they will not close on the individual but automatically snap back open because the light-beam is broken and will remain open as long as the light-beam is blocked. If there is heavy smoke, this too will block the light beam focusing on the electric eye, and the doors will refuse to close, and as a result, the elevator cannot move and remains at the floor where the fire is located - with the doors open. For that reason, anyone who is in any building where fire breaks out, should not take the elevators. Instead, use the stairs.

* * * * *

How salty the ocean is defies ordinary comprehension. It has been estimated that the oceans contain as much as 50 quadrillion tons (50 million billion tons) of dissolved solids.

If the salt in the oceans and seas could be removed and spread evenly over the earth's land surface, it would form a layer more than 500 feet thick--about the height of the Washington Monument.

Washington Report

EFFECTIVE CLEANING OF LATERAL TRASHRACKS[1]

Cleaning lateral trashracks at turnouts along the aqueduct system is a daily problem. They are cleaned by hand, and the various Field Divisions concerned use roughly the same equipment and methods. To make the routine safer, easier, and faster, the Coalinga Civil Maintenance crew (San Luis Field Division) has developed some additional safety aid features to overcome peculiarities of that locality. Figure 2 below shows a typical turnout and the trashracks protecting the outlet.

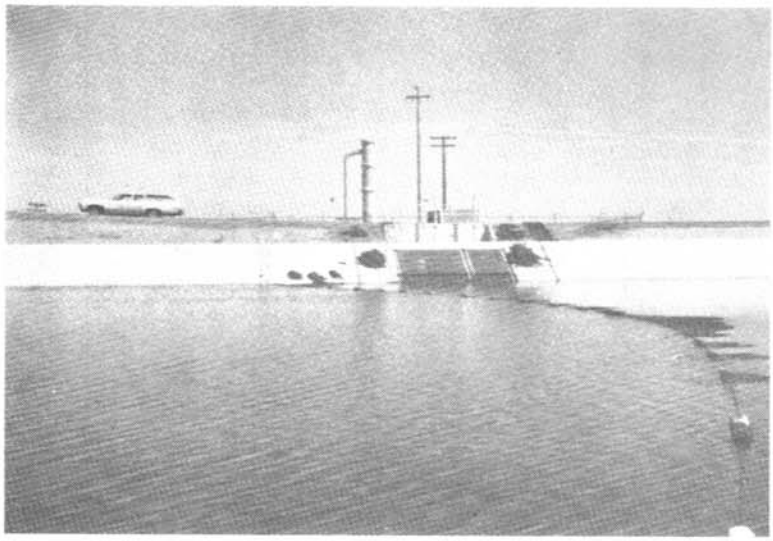

Figure 2

One of their safety features is an adjustable work platform which hooks onto the cross-members of the trashrack nearest the water's edge rather than being suspended by chains. The platform can be adjusted to meet the existing water levels by moving up or down the trashrack.

The platform is made of wood instead of metal, and coated with epoxy paint mixed with coarse sand to make a non-skid footing surface even in rain or mud. Another feature is the addition of adjustable handrails which also hook onto the trashrack and can also be moved up or down in much the same way as the platform. The railings are made of metal pipe bent and angled so that they can be held while walking on the sloping concrete liner down to the platform. The hooks which hold the handrails in place were especially formed and welded by the

---

[1] Reprinted by special permission of the Editor, from Technical Bulletin No. 22, dated June 1974. This is a State of California publication, issued by the Department of Water Resources, Sacramento, California.

men from the maintenance shop at Coalinga. Both the handrails and the work platform can be unhooked from the trashracks if major work has to be done.

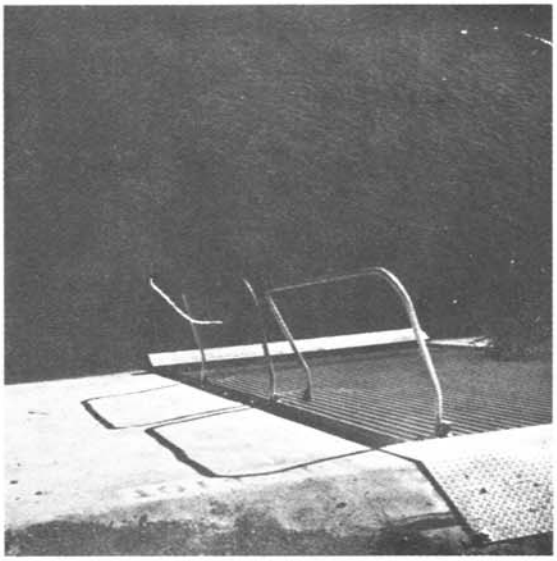

Figure 3

Shown here in Figure 3 is a clear view of the platform with the handrailings in place, and Figure 4 shows how the railing can be telescoped up as the work platform is raised. Figure 5 is a closeup view of the trash-rack with the adjustable platform and handrailings attached.

Figures 6 and 7 on the next page give some idea as to how the hooks are welded onto the hand-rails, and how the rails might hook onto the rack. Figure 8 shows how the railing is hooked into place.

Figure 4

Figure 5

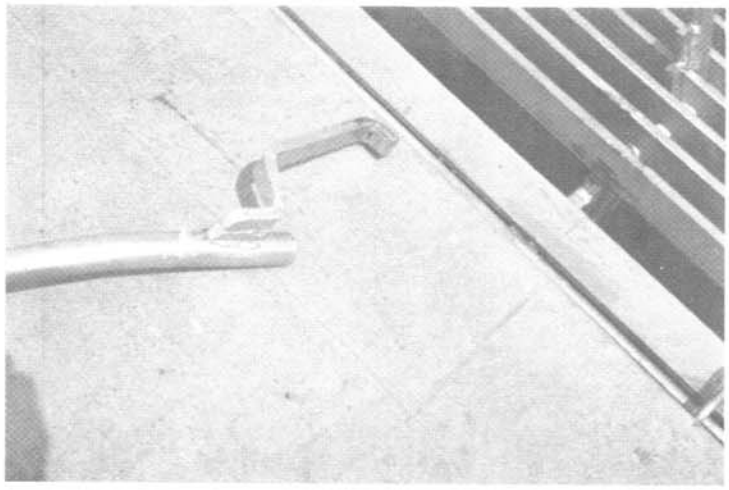

Figure 6

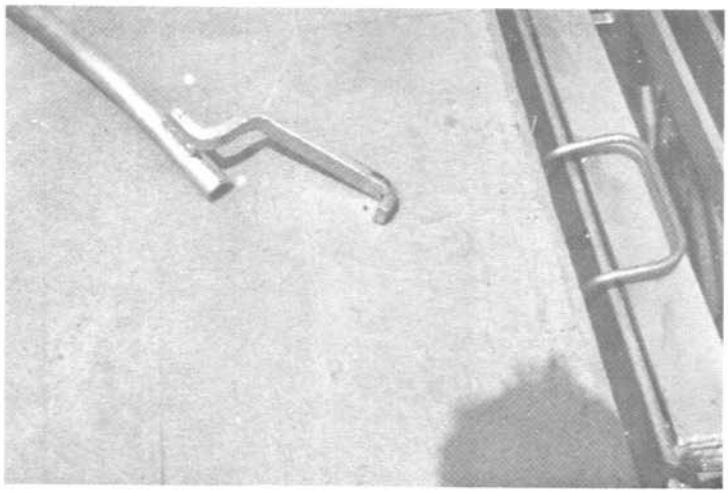

Figure 7

Figure 8

Figure 9

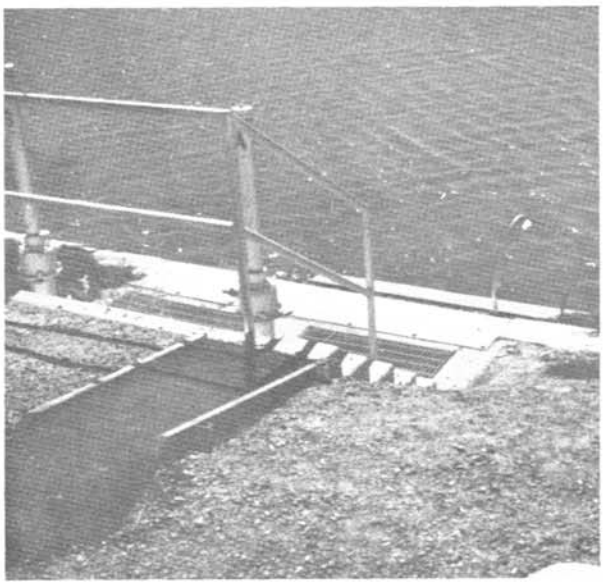

Figure 10

During wet weather the dirt slope of the aqueduct becomes wet, muddy, and slippery. As an additional feature, plant-mix walkways were placed on the slope above the concrete liner where it is necessary for the maintenance crew to walk while carrying out the debris.

Here in Figure 9 it shows the plant-mix walkway as mentioned above, at one of the turnouts on the canal, and Figure 10 below also shows an asphalt walkway at another location.

If additional information is desired regarding the ideas expressed in this article, please write to:
Mr. Alex Macias, Maintenance Supervisor, Coalinga O&M Center, Department of Water Resources, Route 1, Box 410, Coalinga, CA 93210.

* * * * *

UNDERSTANDING HYDRAULIC[1]
EQUIPMENT

The principle of operation of all hydraulic equipment is the same regardless of the type of machine the hydraulics are installed on. From the largest front-end loader or tractor to a low pressure system on a cattle chute, all the systems work basically the same way.

Diagram (Figure 11) shows the components of a basic system. The arrows indicate the direction of the fluid flow when the control valve is in the neutral position. The fluid is pumped from the reservoir through the open spool in the control valve and then back to the reservoir.

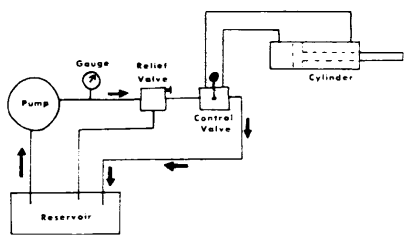

Figure 11

When the control valve handle is shifted, the fluid flow is diverted to the cylinder causing the rod to move. The control valve allows the fluid flowing from the pump to enter one side of the cylinder; the fluid from the other side of the cyclinder is allowed to return to the reservoir. If excessive pressures develop in the system, the pressure relief valve will open and the fluid flow will be diverted back to the reservoir regardless of the control valve handle position. The pressure relief valve protects your hydraulic system from damage; you should never try to defeat it.

Maintenance

Dirt is the destroyer of hydraulic equipment. John Albert, of Maricopa Tractor, explained that hydraulic components are built to close tolerances and frequent changing of the filter is essential. Charles Dickens, Shop Foreman, Mr. Stapley, urges you to change the filter, drain and flush the system according to the manufacturer's specifications.

A great deal of damage can be done to a hydraulic system when inexperienced people attempt to repair them. If you disassemble your system, be careful to protect all the parts from dust and dirt. Never mix different types of hydraulic fluids; make sure you use the correct hydraulic fluid. Failure to use the correct fluid can damage the O-rings and seals in the system.

---

[1] Reprinted by special permission of the Livestock Editor, Mr. Temple Grandin, from the Arizona Farmer-Ranchman, October 1974 edition.

Albert warns that unauthorized readjusting of the pressure relief valve can ruin the system. If your system slows down, check for a plugged filter before you start messing around with the relief valve. Over-tightening the relief valve can burn up the motor on electrically driven systems and damage the pump or blow out a seal on tractor systems.

While on the subject of pressure relief valves, Albert warns of another pitfall you could fall into. If a hose is connected to the wrong place you could create a circuit which had no pressure relief valve. In a matter of moments this deadend circuit could crack your pump.

Heat

Excessive heat buildup is very damaging. Heat destroys the lubricating qualities of the hydraulic fluid which can cause seals to deteriorate. Excessive heat can be caused by using the wrong type of fluid.

Another cause of heat buildup is substituting a smaller fitting when replacing a hose or some other part. For example, replacing a 1/2-inch ID fitting with a 3/8-inch ID fitting will create a restriction in the system which can cause overheating.

Trouble Shooting

Charles Dickens suggests that when something goes wrong with your hydraulic system you should check the filter first. A clogged filter is one of the most common causes of hydraulic system malfunction. An extremely dirty filter will tell you that you may have seriously damaged the machine.

The symptioms of a clogged filter are erratic gauge readings which can be either too high or too low. The system may operate in a noisy jerky manner.

Air in the system is another common problem. If the gauge reads higher than normal and the system is overheating you should check the suction line and replace the crossover tube. If the pump is shot, the system may start overheating and the pressure will be lower than normal. On some machines the control valve may not return to neutral.

Rusted linkages and pivot points in the implement being operated with the hydraulic system can cause problems due to binding. The symptoms are jerky movement and excessive hydraulic pressure. Binding can also be a problem in the control linkages. Suspect binding if the control handles can not be readily moved from neutral or will not return to center.

* * * * *

JERRY CAN AND PLASTIC JUG CARRIER

The unique idea presented here was sent to us by Mr. Gordon Johnston, District Field Superintendent for the Solano Irrigation District, Vacaville, California.

Mr. Johnston reports that the plastic jug and jerry can carriers shown in figure 12, and also in figure 13 on the next page, are mounted inside a pickup truck bed, and have helped greatly to keep the bodies and also the bed of the pickups much cleaner. The carriers not only have eliminated a safety hazard that was present from loose jugs and cans shifting positions, but have reduced waste due to spillage. Vandalism of the jerry cans has also been controlled by providing a hinged locking device over the cans.

Figure 12

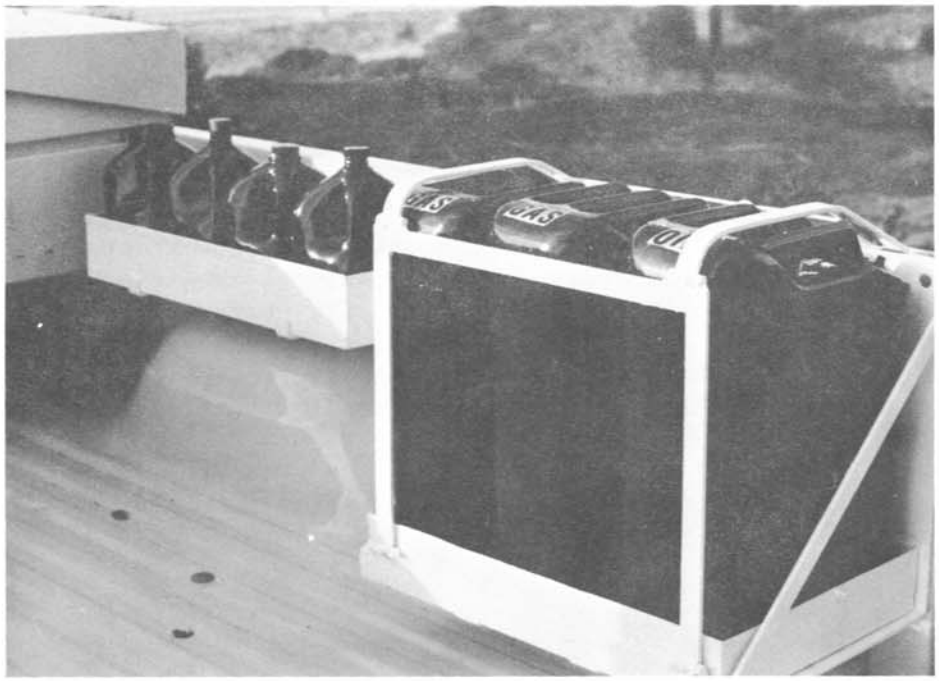

Figure 13

The carriers were designed by Solano Irrigation District personnel and fabricated in their sheetmetal shop. Construction features for the jug and jerry can carriers and catch pan inserts are detailed in figures 14 and 15 respectively. Mounting can be modified as shown in the sketches to suit fleetside or flared side pickup beds.

A parts list is shown below; these quantities make approximately 12 carriers.

64 lbs. steel (1 x 1/4 FB) - $.35 per lb.	$ 22.40
14 hrs. Welder - $5.25 an hr.	73.50
4 hrs. #13 Welding machine - $1.00 an hr.	4.00
2 lbs. 6013 Welding rod - $.75 per lb.	1.50
12 metal trays fabricated in District shop -	117.66
	$219.06
Supply clerk's time--	7.00
Total	$226.06

If further information is desired regarding these carriers, please write to the Solano Irrigation District, 508 Elmira Road, Vacaville, California 95688.

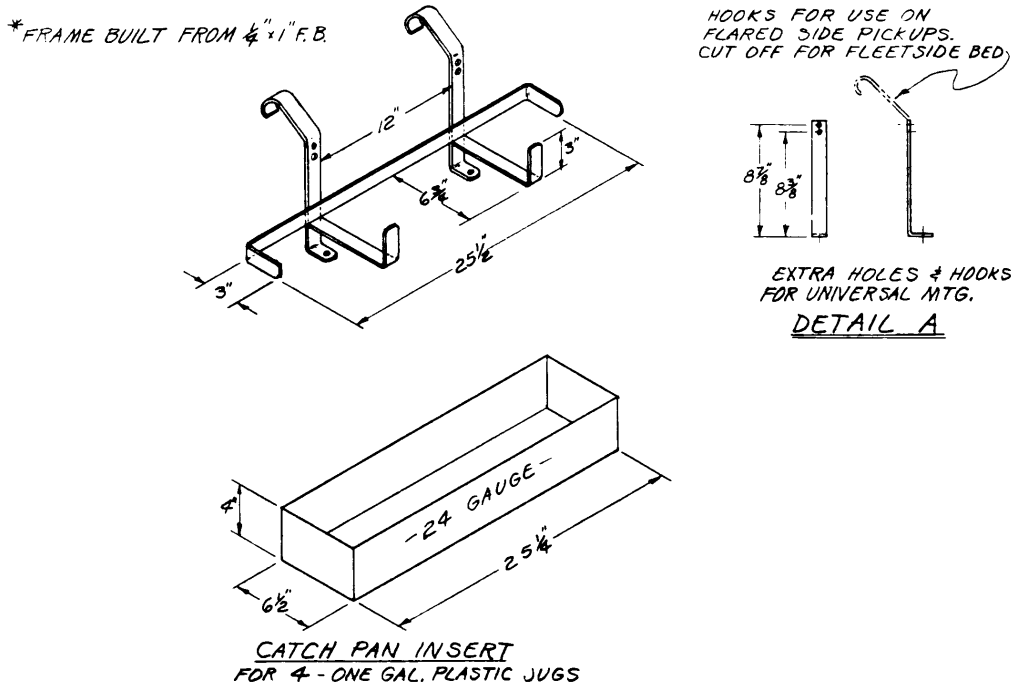

Figure 14

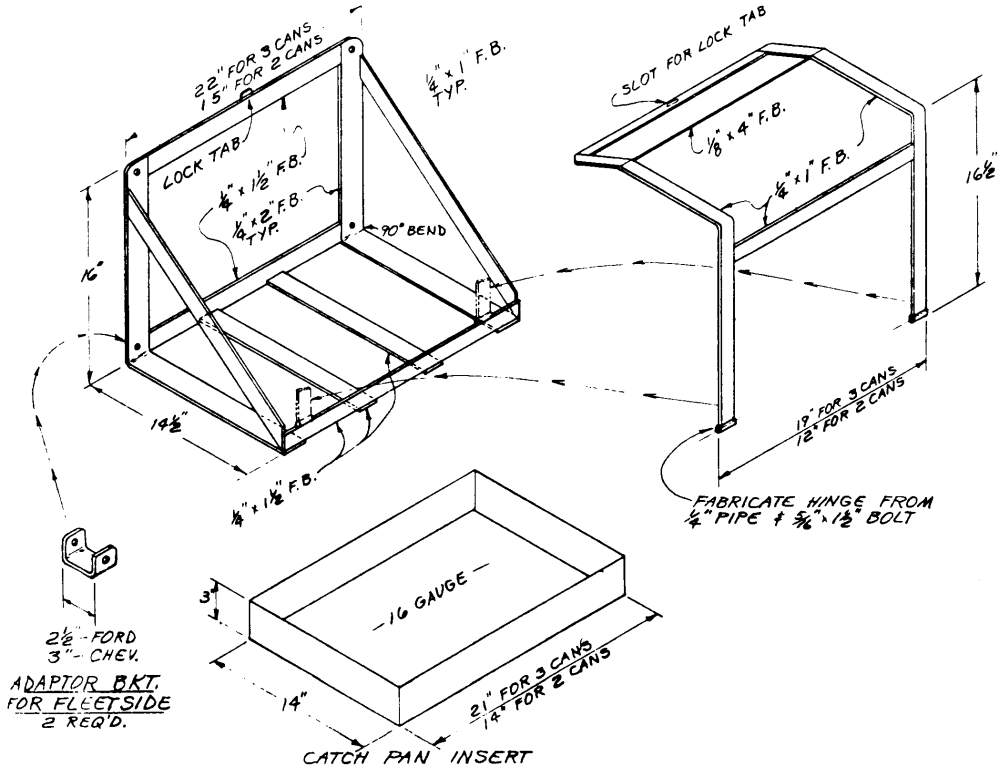

Figure 15

* * * * *

SAND TRUCK BECOMES
A
SHOULDER SPREADER

(Reprinted by permission from a recent issue of GRIST, a publication of the National Conference of State Parks, Washington, D.C.)

How can you make seasonal equipment work for you all year round? At Yellowstone, Park Road Foreman Mr. Roy B. Marchington and Engineering Equipment Operator Mr. Helmer Jensen have come up with a unique way to use a sand truck for building shoulders as well.

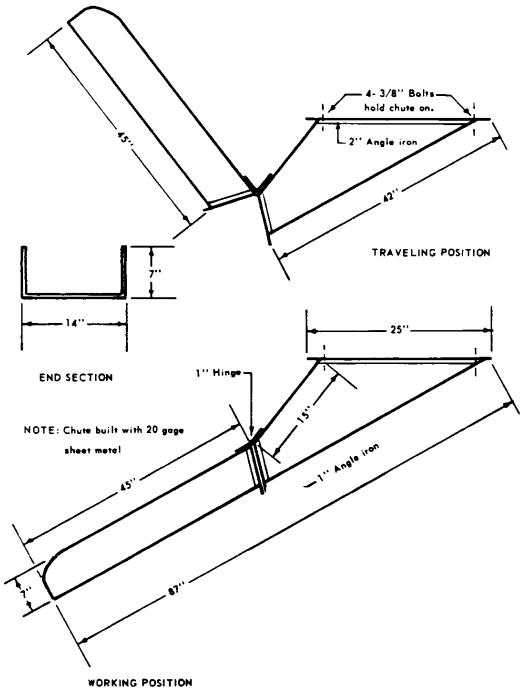

The cumbersome technique of tailgate dumping on the pavement edge, hand spreading, blading to distribute the material and sweeping the pavement clear of excess material before compaction has now been simplified.

The men added an angled chute to a sanding dump truck, previously used only in the winter to sand icy roads. The truck and chute permits a reduced work crew to lay down new shoulder material in one pass, plus two passes of the grader for spreading and compaction. And the whole conversion takes about 45 minutes and about $40.00! (Please see sketch at left.)

The chute-equipped sand truck is a safer method of getting the job done too. Traffic delays are fewer and the whole process is more economical. The sand truck carries only half a load less than the equivalent of three dump trucks, requiring less equipment to produce more linear feet of shoulder. The amount applied can be exactly proportioned through combinations of the truck's six speed gear and tailgate openings.

In direct costs, the Marchington/Jensen suggestion breaks down like this: 64 man-days are saved each year, or $900, the increased equipment utilization is given a value of $200--and of course, the additional bonus of an incentive award!

* * * * *

EXPLOSION IN GREASE TRAP[1]

Three employees were injured, when a grease trap beneath the floor of the welding shop exploded. Considerable damage was also done to the shop - the ceiling was broken by the manhole cover; one door was blown out; partitions were cracked.

This, in brief, is what happened. One mechanic was using a cutting torch to make up exhaust pipe brackets. Two other mechanics were performing other shop duties. The explosion shot the manhole cover to the ceiling, blew out an overhead rolling steel door, and cracked partitions. One of the mechanics was blown through the door opening after the door had departed. The other two were slammed against the wall and a wash sink. Fortunately, the fire was brief and personal injuries were not serious . . . but this was only by chance.

Subsequent investigation disclosed the liquid in the grease trap to be contaminated with a volatile flammable liquid, probably gasoline. The trap in the floor drain was empty - the water had evaporated. The normal sewer gas vent from the grease trap was in proper condition. A welding spark or molten metal ignited the flammable vapors, either at the floor drain or through the ill-fitting manhole cover.

These are brief facts, but the lesson is clear:

DO NOT DISPOSE OF FLAMMABLE LIQUIDS DOWN SANITARY OR STORM SEWERS.

If flammable liquids are accidentally spilled into a sewer system, which may have happened in this case, notify your supervisor immediately so proper precautions can be taken.

* * * * *

Plants That Give Insects Indigestion

The National Science Foundation and the U.S. Department of Agriculture are funding a Washington State University research project to determine if plants can be grown with their own insect inhibitors. When some plants are chewed by insects they produce proteinase inhibitors which bother the insect's digestion. The potentials in plant protection are being explored with the hope that plants can become indigestible to insect larvae.

---

[1] Reprinted from the Reclamation Safety News, Fourth Quarter 1974.

OSHA Chief Warns of "BOGUS" Inspectors[1] and Advertising Claims

The U.S. Department of Labor has alerted employers to persons posing as Occupational Safety and Health Administration (OSHA) inspectors and has also suggested they watch out for misleading advertisements of safety equipment.

Assistant Secretary of Labor John H. Stender, head of OSHA, said OSHA inspectors carry special Labor Department credentials and if employers doubt the authenticity of an inspector, the identification number and inspector's name can quickly be verified by telephoning his home office.

He said bogus inspectors use several "con games." "Some will demand on-the-spot payment of penalties for conditions they claim violate OSHA rules," he said. "Others will point out so-called violations and suggest they can be corrected by a particular tool, machine or piece of equipment. These usually are followed a day or so later by an accomplice who offers to sell the employer the recommended items." He said both procedures violate Federal law.

Mr. Stender also warned employers to be alert for misleading advertisements for safety equipment. He said that any assertion that the product is "OSHA-approved" is incorrect since OSHA does not approve any safety equipment.

Noting that several past instances of improper advertising were referred to the Federal Trade Commission for action, Stender asked that employers bring to OSHA's attention any examples of what they believe to be misleading advertisements.

* * * * *

In 1973, using about the same acreage they did in 1960, the nation's farmers increased over-all crop production by nearly 30%. And they did this while reducing total farm work time by 4 billion man-hours.

Arizona Farmer-Ranchman

---

[1]Reprinted from the Reclamation Safety News, Third Quarter 1974.

OSHA HEAD PROTECTION REQUIREMENTS[1]

Section 1910.135, Occupational head protection, of the Occupational Safety and Health Standards, is quoted as follows:

> "Helmets for the protection of heads of occupational workers from impact and penetration from falling and flying objects and from limited electric shock and burns shall meet the requirements and specifications established in American National Standards Safety Requirements for Industrial Head Protection, Z89.1-1969."

Aluminum safety hats or caps do not satisfy the limited shock requirements. Helmets acceptable for limited voltage protection (Class A and D helmets) withstand 2,200 volts, AC, 60 Hz for one minute, with leakage current not in excess of three milliamperes. Aluminum helmets do not satisfy this requirement and cannot be used in any type of environment.

* * * * *

---

[1]Reprinted from the Reclamation Safety News, Third Quarter 1974.

GPO 859-919

The purpose of this Bulletin is to serve as a medium of exchanging operation and maintenance information. Its success depends upon your help in obtaining and submitting new and useful O&M ideas.

Advertise your district's or project's resourcefulness by having an article published in the bulletin! So let us hear from you soon.

Prospective material should be submitted through your Bureau of Reclamation Regional office.