WATER OPERATION AND MAINTENANCE

BULLETIN NO. 87

MARCH 1974

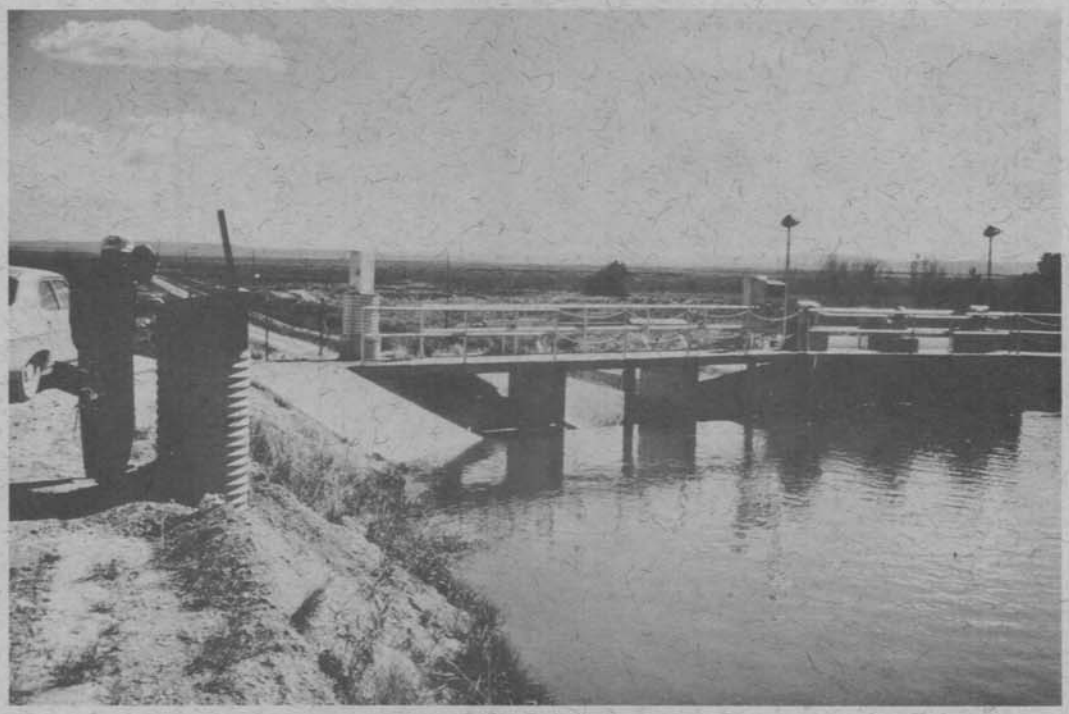

IN THIS ISSUE

WATER SYSTEMS AUTOMATION

FLOW MEASUREMENT CAN BE EASY, WITH A LITTLE SUPPORT IN THE RIGHT PLACES

ENERGY CONSERVATION SUGGESTIONS FOR WATER USERS

PRECAST STRUCTURES

ROLLOVER PROTECTIVE STRUCTURES ON MOTOR GRADER PREVENT SERIOUS INJURY

UNITED STATES DEPARTMENT OF THE INTERIOR

BUREAU OF RECLAMATION

The Water Operation and Maintenance Bulletin is published quarterly, for the benefit of those operating water-supply systems. Its principal purpose is to serve as a medium of exchanging operation and maintenance information. It is hoped that the reports herein concerning laborsaving devices and less costly equipment and procedures will result in improved efficiency and reduced costs of the systems for those operators adapting these ideas to their needs.

To assure proper recognition of those individuals whose suggestions are published in the bulletins, the suggestion number as well as the person's name is given. All Bureau offices are reminded to notify their Suggestions Award Committee when a suggestion is adopted.

* * * * *

Division of Water Operation
and Maintenance
Engineering and Research Center
Denver, Colorado 80225

COVER PHOTOGRAPH:

Photo taken at Mile 40 West Canal, Columbia Basin Project, Ephrata, Washington, view looking downstream. Messrs Paul House of the Quincy-Columbia Basin Irrigation District and Glenn Burrows, Bureau of Reclamation Engineer, on bank at left, are examining a chart which records water surface fluctuations upstream at this automated check structure. Photo P222-D-74283

UNITED STATES DEPARTMENT OF THE INTERIOR
Rogers C. B. Morton
Secretary

BUREAU OF RECLAMATION
Gilbert G. Stamm
Commissioner

WATER OPERATION AND MAINTENANCE
BULLETIN NO. 85

March 1974

INTRODUCTION

Varying degrees of automation have been incorporated in the design of water systems for many years. The article starting on page 1 was condensed from a recent "State of the Art" report, and describes current development of automation equipment and various concepts of automation along with potential application to water systems.

"Flow Measurement Can Be Easy, With A Little Support In the Right Places" is the title of an article on page 9. It describes a most excellent idea of how the State of California, Department of Water Resources, solved an old problem.

A most timely article on energy conservation compiled by the Water and Land Operations Division, Sacramento, California, reprinted on page 14 by special permission from the Mid-Pacific Regional Office.

In the article starting on page 17, the Salt River Project, Phoenix, Arizona, shows what can be accomplished with natural rock precast panel enclosures to enhance appearance of project facilities, and at the same time, reduce construction time at the site.

The last article and photo illustrations on page 21, show how a serious injury was prevented when a motor grader rolled over on its side.

WATER SYSTEMS AUTOMATION[1]

Advances in technology now make automatic control feasible for almost any water system. Equipment is now becoming available which can be used to monitor and control even the most complex installation. However, the application of these new tools of technology to water projects is limited by their cost.

Water systems are automated to improve service to water users, to increase efficiency of operation, and to reduce cost of operation. Automation of water systems is a product of an interdisciplinary effort to develop devices to improve operation of these systems. Tools such as analog electronic circuitry, computers, mathematical models, and self-contained mechanical controllers are required. The type of automation installed on a particular project depends on the type of operation desired and the complexity of that system. Factors such as cost of labor, value of water, and reliability of equipment, require consideration. With increasing water system complexity, automation is more often justified now than it was in the past. Most new water systems should be designed with some degree of automation.

Less than optimal operation of an open-channel conveyance system is frequently due to the difficulty of matching the inflow and outflow of the system. Mismatches between diversions and deliveries can occur as a result of inaccurate regulation, unexpected changes in inflow or outflow, lack of adequate storage, and the long time lag inherent in conventional canal operation. For instance, many conventionally operated canal systems require a full day or more of travel time for a change in flow to get through the conveyance system. The ability to accommodate increases or decreases in demand at the turnouts due to unexpected rainfall, critical temperature changes, or other reasons is dependent upon the time lag of the system. Automation can greatly decrease the effect of this time lag, compensate for inaccurate regulation, and generally provide better service to the water users at less cost and with less waste of water.

Water deliveries from Federal Reclamation projects totaled nearly 27.0 million acre-feet during 1972. Water service was provided to nearly 16 million people. Deliveries were made to over 145,000 farms comprising over 10 million acres of irrigable lands and to 276 municipalities or other entities for municipal, industrial, and miscellaneous uses. Some 47,000 miles of canals and laterals, 307 storage reservoirs, and 322 diversion dams were in operation on Bureau of Reclamation projects to provide this service. Considering these

---

[1] Reprinted in part from the recently released report entitled, Water Systems Automation, current information on automation of Reclamation water systems. A state of the art report by the Water Systems Automation Team, Bureau of Reclamation, E&R Center, Denver, Colorado.

varied and extensive facilities and current and projected water needs, the best practical methods of water management should be developed and instituted to assure efficient use and conservation of existing developed water supplies. These methods, including use of automation, should be adopted for planning new water projects.

Pressure pipe systems are the best means of providing automatic control of discharge to a turnout where delivery is based on demand. However, pipe systems are usually more expensive to construct than open-channel systems and some water conveyance systems are not intended to be operated to meet a demand. Proper automation of a water system requires an analysis of what the system is intended to do and an economic comparison of the alternatives.

Automation Needs

Recent Bureau of Reclamation water-use studies have shown that an average of only 44 percent of the water delivered to irrigators' fields on Reclamation projects is stored in the root zone for beneficial consumptive use by crops. Seepage from canals and laterals accounts for 20 percent of the total water diverted for irrigation in the United States. These percentages do not represent real losses because much of this water returns to streams or replenishes groundwater aquifers that provide the water source for wells or springs.

Factors responsible for inefficient management and utilization of irrigation water are many and often interrelated. Application of modern technology in programs of research and development for automation of water systems will improve the efficiency of project and farm irrigation systems and management of conveyance and distribution systems. More efficient use and better management of irrigation can make more water available for municipal, industrial, and recreational use to help meet today's and future needs.

No absolute rule can be made to include or omit automatic or remote controlling and monitoring devices on specific features of Bureau projects. Planners, designers, and operators together face the tasks of analysis and synthesis to arrive at solutions for each feature and/or project. Comprehensive studies of costs, safety, and reliability along with the service to be provided by each feature and the overall type of operation desired should be assembled prior to final decisions.

The water users' need for water is not always predetermined sufficiently in advance to assure expeditious delivery or permit rapid shutoffs. Such uncontrolled situations as unexpected rainfall or the need for protective spray to prevent frost are often not readily accommodated. Control systems which make water more quickly available greatly enhance the margin of profit for water users, and those which accommodate quick shutoffs can improve system efficiency.

Automation of water systems is needed to reduce labor cost to the water user. Simple automatic devices have been used for many years to operate single water control structures. Although these devices are limited in the degree of control they can provide, they are proven labor-saving devices. In the past most such devices have been for control of individual structures. A real need now exists for equipment and concepts which will provide efficient operation of complete conveyance and/or distribution systems. This requires a systems approach to fit the concepts and equipment to the operational needs. The end product will go beyond automation per se and will include operations research techniques to optimize the controls and operations. Further sophistication of automation devices will not only reduce labor costs but help conserve water through better operation of water control structures.

The facilities of a typical water system can be classified generally as storage works, diversion works, conveyance system, and distribution system. The storage works consist usually of one or more storage reservoirs, generally having outlet works for regulation of water releases therefrom, and a spillway for protection of the dam. The diversion works may consist of a typical diversion dam with headworks for controlling releases into the conveyance system, and with a sluice gate and spillway for stream regulation and protection of the structure. It may also consist only of a headworks or a pumping plant discharging into the conveyance channel. Figure 1 on page 4 shows the Red Bluff Diversion Dam, a feature of the Central Valley Project in California. This structure illustrates the complicated operations often encountered at irrigation headworks. The facility includes fish diverters and ladders, a sedimentation basin and spawning bed, and the diversion works for the Tehama-Colusa Canal, all of which require well coordinated operation.

The conveyance system generally is an open-channel system with structures for control of flow in the system and for delivery into the distribution system. It may also be a pipe or aqueduct with control and delivery structures. The distribution system is a series of open ditches or pipe laterals with a control structure and a delivery structure to the water user. Often the same control concepts can be applied to the conveyance and distribution systems. Figure 2 also on page 4 shows a prototype installation of automatic controls above a canal check.

Automation has been applied in varying degrees to all types of water control structures from the storage works through the distribution systems. Each water control structure serves a specific function in a water system. Generally speaking, all of the control structures control either a water surface elevation by regulation of a control gate or pumping plant, or control the quantity of water being discharged through or into a particular structure. The type of automation selected to accomplish a particular control structure function

Figure 1 P-602-200-5667 NA

Figure 2 P-801-D-73319

or to operate a total water system depends upon the requirement for and economics of the particular situation.

Concepts of Operation

If a sufficient supply of water exists and the conveyance system is capable of transporting the appropriate flows, then a water system can be operated to meet the needs of the users. Such a demand-type system is not feasible, however, if the supply or the conveyance of water is limited to lesser amounts than required. Where the use of water must be limited because of less than adequate storage or conveyance capacities, a supply-type system is necessary. For instance, a domestic water supply usually operates to meet the demands of the users whenever a faucet is turned on. However, in times of water shortages, water use is limited and water is available only on a rationed or prorated basis. Conversely, in any water system, if water is available in plentiful supply and the conveyances are adequate, the system can be operated to meet the demands. Otherwise, water may be only available to users with the highest priorities or all users may have available only a fraction of their full demand.

The two most common methods of operating a water system utilize either upstream or downstream control. With upstream control the sensor is located upstream from the structure being controlled and with downstream control the sensor is located downstream from the structure being controlled. Upstream control is associated with a supply-type operation and downstream control is associated with a demand-type operation.

Each of the structures described previously can be operated with either of these methods but upstream control has been the traditional method of operation on open-channel systems, while pressure conduit systems have for the most part been operated with downstream control. Whether upstream or downstream, the method of operation can be independent of the automation incorporated therein. However, downstream control of open-channel systems has been achieved largely through the use of automatic devices.

The operation of storage dam outlet works is usually based on meeting the needs of the water users consistent with providing storage reserves. Thus, releases from storage during periods of adequate supply serve to meet the full demands of the users. During periods of limited supply, however, the releases are restricted and a system of priorities or across-the-board reductions is imposed. The flow of water can be traced through the system from source to user and the control structures can be operated to meet the demand on the system or to deliver a restricted supply to the users.

Automatic Control

Two important concepts of automatic control are feedback control and feed forward control. With feedback control (closed-loop) systems a comparison is made between a desired condition and an actual condition and changes are made to attempt to eliminate any difference between desired and actual conditions. Feed forward control or open-loop systems have no provisions for comparing results - a change is made with no check back on the system. Most water system operations require a combination of feedback and feed forward control.

The five common modes of feedback control are: ON-OFF control, floating control, proportional control, reset action, and rate action. Mathematical representation of these control functions becomes desirable when feedback control is to be programmed into a computer for real time control or study.

Two-position Control

Two-position control is the simplest mode of automatic control. The control function moves the controlling element to one of two extreme positions as determined by the controlled water surface. When these two extreme positions become fully opened or fully closed, the controller becomes an ON-OFF controller, and can be an electrical switch for the operation of pumps.

Floating Control

In contrast to two-position control, which changes the position of the controlling element from one extreme position to the other (ON-OFF), floating control changes the position of the controlling element at a constant speed whenever the controlled water surface deviates from its target depth by a predetermined amount. The direction of gate movement is determined by the direction of the deviation. The controlling gate makes no movement as long as the controlled water surface is within the dead band (the desired range of operation). When the controlled water surface is outside the dead band, the controlling gate will continue to move until either the water surface returns to the dead band or the gate reaches a fully opened or fully closed position.

Flexibility has been provided for some floating controllers to accommodate rapidly changing water surfaces by the addition of a function that increases the width of the dead band each time the gate moves. This modification results in a gate movement that strongly resembles proportional control. Increasing the dead band width provides a variable rest time and cycle time so that these controllers become set-operate-time/variable-rest-time (SOT/VRT) controllers. The variable rest time inherently provides antihunt action with all its associated advantages and disadvantages.

Proportional Control

With proportional control the position of the controlling element has a fixed relationship to the controlled variable. A controlling gate has a position for each water surface elevation that is defined by multiplying deviation of the water surface by a gain factor.

One example of a floating control is called the "little man". The term "little man" has been applied at different times to such a wide variety of installations that its definition is somewhat obscure. In general, the term applies to single-stage floating controllers modified by set-operate-time/set-rest-time (SOT/SRT), and often includes an antihunt device. Little man controllers have also been assembled that include (1) two or three stages of floating controls, (2) a 1-revolution-per-day motor that raises or lowers the target depth a fixed amount each day for filling or unwatering a canal, and (3) a 24-hour clock that can be set to open a turnout at some predetermined time.

Operators on the Friant-Kern Canal pioneered the development of little man controls. The development of similar controls on the Columbia Basin Project was completely independent of the earlier effort. Both developments perform almost identical functions but with considerably different equipment. Schematic diagrams of this equipment are shown on page 8. Figure 3 shows the schematic diagram for a Columbia Basin type little man controller, and Figure 4 shows the schematic diagram for a Friant-Kern type little man controller. Both of these developments, operated by floats, disclosed a need for an antihunt device.

Research and Development

Both of these areas are necessary to provide methods and equipment for automation of water systems. Theories, methods, and equipment have been developed to automatically control a wide variety of industrial processes. The control theories and principles developed for industry are useful in the research and development necessary for water systems automation. Normally, the automation satisfying the needs of industry is not directly convertible to the needs of water distribution. For example, stabilizing the discharge in a long canal requires a long period of time compared to that necessary for maintaining a uniform voltage level in an electric power network. Also, mechanisms used in industry for process control are not directly adaptable to control of water systems.

The research and development program under way in Reclamation is concentrating initially on the problems of open channel automation. Valuable tools such as mathematical models and laboratory models are used in this effort. Immediate application of improved control techniques is needed for the operation of existing and new projects.

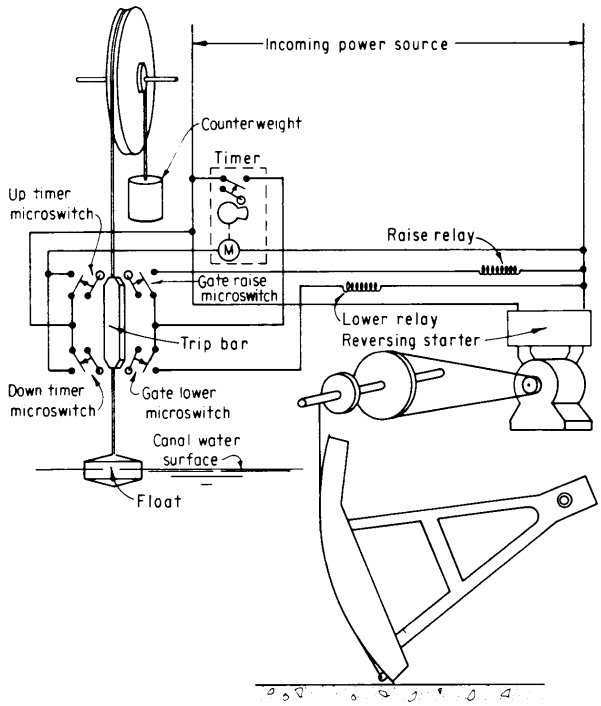

Figure 3

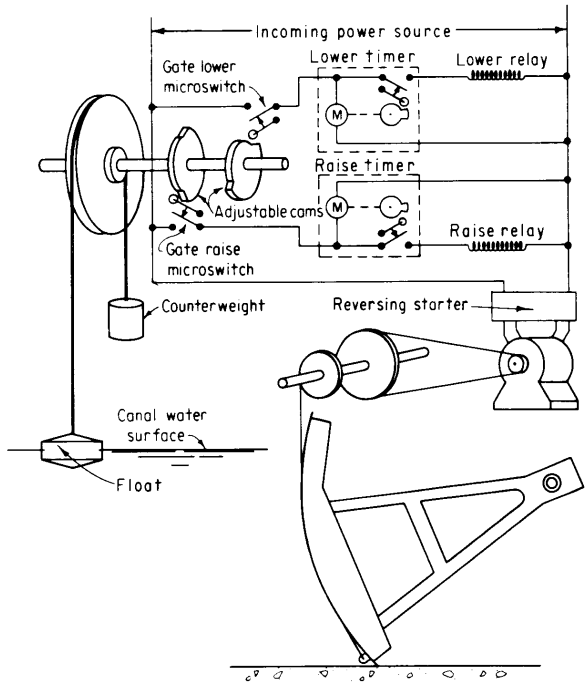

Figure 4

* * * * *

FLOW MEASUREMENT CAN BE EASY, WITH A LITTLE SUPPORT IN THE RIGHT PLACES[1]

Parshall flumes are a standard means of measuring water: so much depth, for so long a time, equals a certain quantity. There are Parshall flumes at many locations throughout the Project. They perform perfectly well unless silting or subsidence alters their constant relationships, which has been known to happen. It is also possible that the "black box" instrumentation at the flume may start giving incorrect readings. Because of these possibilities, or merely because the water contractor may want to be reassured that the quantities delivered are correct, the flumes are calibrated at regular intervals. The usual method of verification is by hand-dipping a Current meter into the water and computing the results. This commonplace operation meant some uncommon problems in the San Joaquin Field Division. At most of the flumes, water currents are so strong that the meter is almost dragged out of the operator's hands and sometimes the mounting shaft is bent. These conditions make it hard to get repetitive readings at same depths, a necessary condition for plotting truly reliable curves. With a big assist from S.C.E.'s Borel Canal Ogee Weir measuring device at the Isabelle Dam, the San Joaquin Field Division men developed an answer to their difficulties and are testing it at three flume turnouts.

Description

As a first step, the mounting hardware for a standard AA Current meter was attached to one end of a 10-foot-long, 1-1/2-inch steel pipe. This meter support rod would take a lot of water pressure without bending. Figure 5 on the next page shows the meter in place on the end of the pipe. The beefed-up arrangement weighted in at 40 pounds so a 40-pound counterweight system was added. An overhead trolley way, made of steel "I" beam with a traveling pulley, was installed at each of the flume-turnouts. Over this pulley they suspended a stainless steel cable with the meter rod at one end and the counterweight at the other. With this, the meter is easily raised or lowered to any given depth, which brought out the next problem: how to assure that the meter was placed in the water at the same spots and to the same levels time after time. The overhead rail with the counterweight system is well indicated in Figure 6. The picture also shows the solution to problem No. 2.

---

[1] Reprinted by special permission of the Editor, from Technical Bulletin No. 18, dated June 1973, published by the State of California, Dapartment of Water Resources, Division of Operations and Maintenance, Sacramento, California.

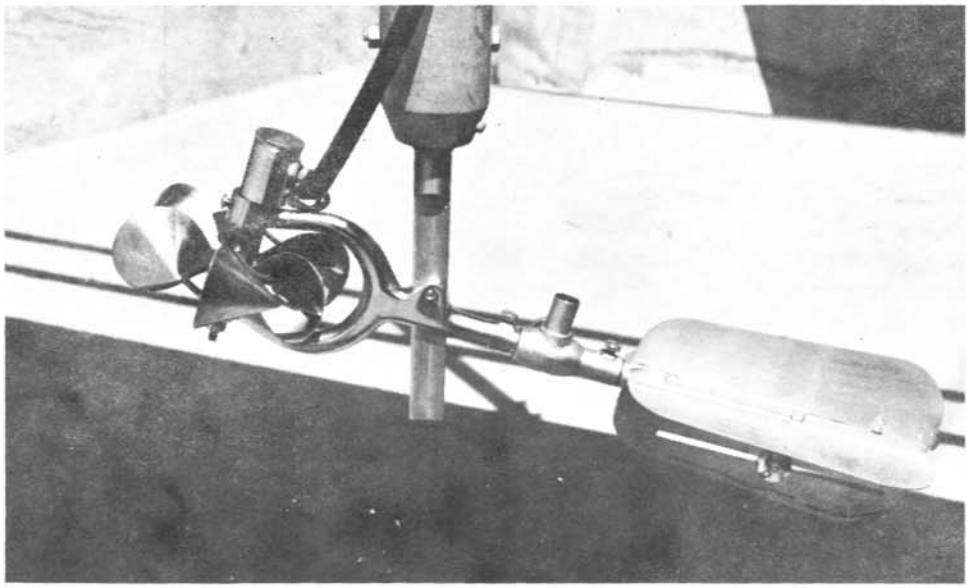

Figure 5 PX-D-74409

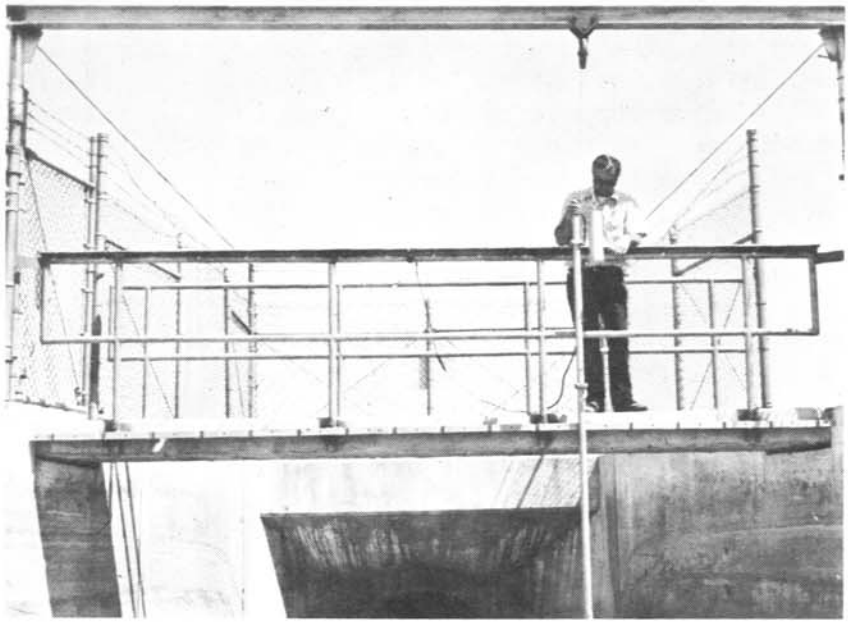

Figure 6 PX-D-74410

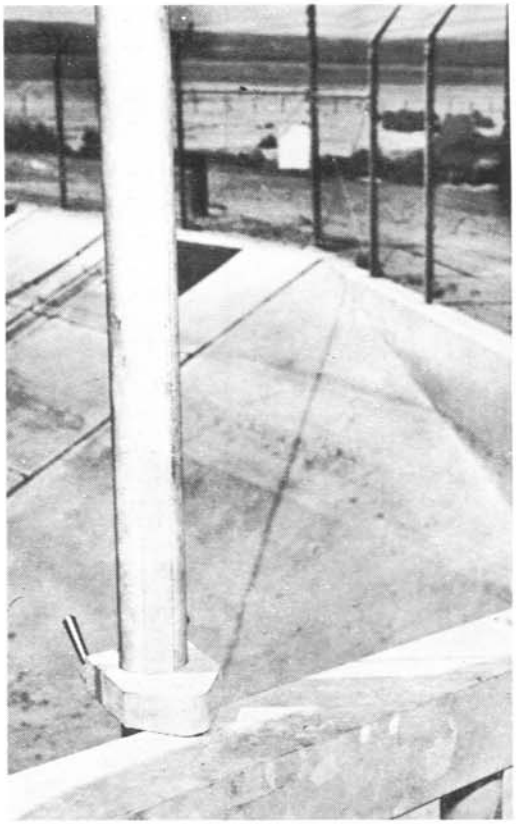

Figure 7 PX-D-74411

Along the upstream guard rail of the bridge the men welded a length of steel angle with holes predrilled at intervals of one foot. Along the edge of the bridge, on the same side, they then bolted a wooden strip notched at the same one-foot intervals. This gives two points at which to rest the meter rod to guarantee vertical alignment and at the same location each time. The holes cut in the steel angle were made to take a short piece of metal dowel on the underside of an indexing clamp-ring fitted around the meter support pipe. In fact, there are two such clamp-rings; this is the way readings at the two precise depths are obtained at each station. Figure 7 shows one of the clamp-rings, and also shows the graduated scale the men machined on the support pipe to help position the clamps. Figure 8 is an underside view of one of the clamps, showing how the dowel peg fits into the slot on the steel angle.

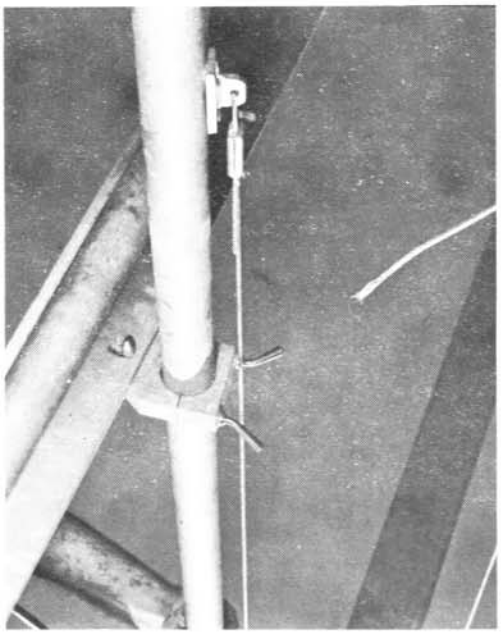

Figure 8 PX-D-74412

Figures 9 and 10 show the entire layout of equipment in place for testing at two different depths. Mr. John McKim, Water Operator at Lost Hills O&M Center, is doing the demonstrating at a test site on the dry channel at Buena Vista No. 2 turnout near Tupman.

Using the new equipment at three locations, the operators have been able to consistently measure within 2% of the established parshall curve, which is shown in Figure 11 on the opposite page. The results

Figure 9 PX-D-74414

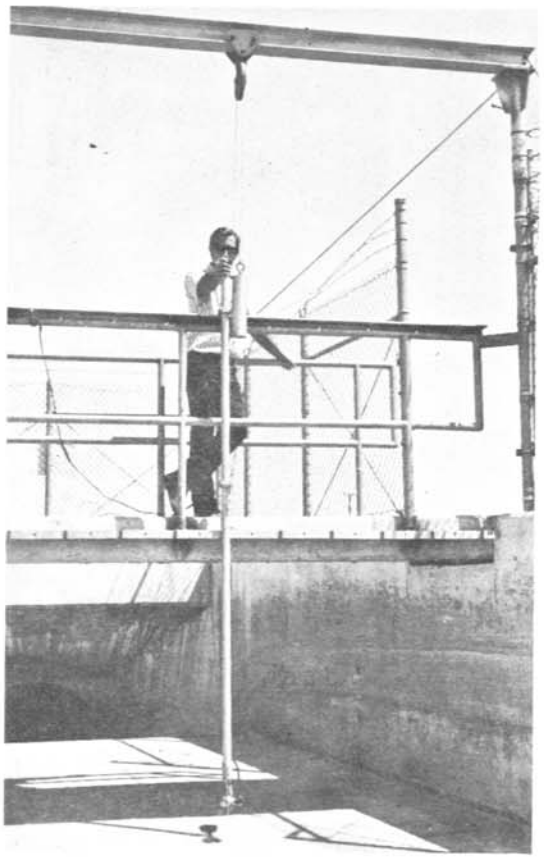

Figure 10 PX-D-74413

of the new measurements are shown as circled dots on this same figure. This kind of capability not only provides accurate checks when required but also gives the operators more confidence in establishing new curves in the event of structural problems.

If further information is desired regarding this article, please write to the Chief, Technical Development Section, Plant Operations Branch, State of California, Department of Water Resources, P. O. Box 388, Sacramento, CA 95802.

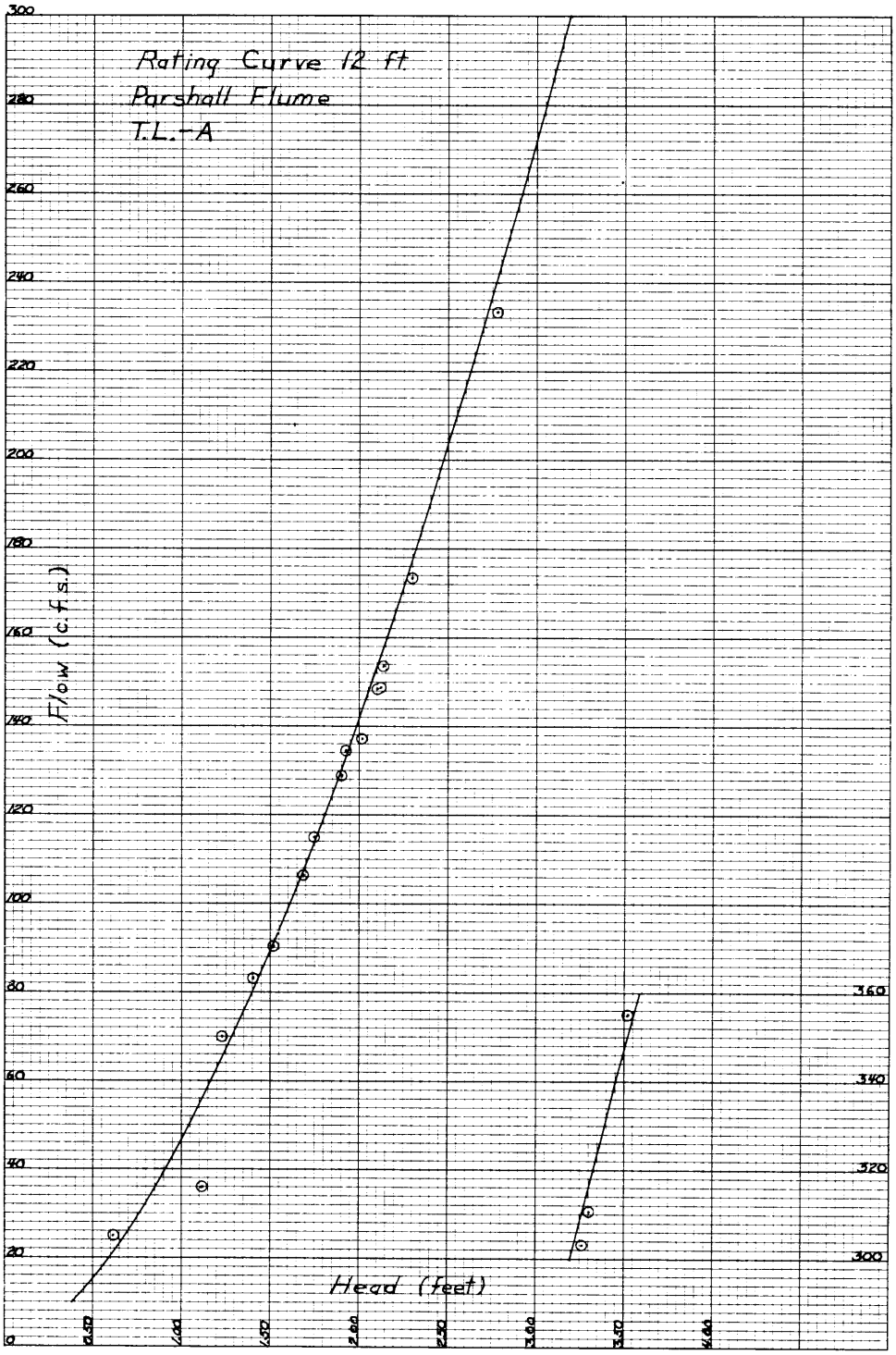
Rating Curve 12 ft.
Parshall Flume
T.L.-A
Flow (c.f.s.)
Head (feet)
300
280
260
240
220
200
180
160
140
120
100
80
60
40
20
0
360
340
320
300

Figure 11

* * * * *

ENERGY CONSERVATION SUGGESTIONS[1]
FOR
WATER USERS

In general, all district employees and water users' should be aware of the energy crisis and have the desire to conserve energy even if it does cause some inconvenience and delay in actual operation.

Listed are Ideas for Consideration:

1. Do not waste water -

   a. by over irrigation
   b. by permiting excessive runoff from fields
   c. by allowing excessive spills from canals, laterals, and pipeline overflow standpipes
   d. through pump bypasses
   e. by usage of exceptionally long irrigation runs.

2. Reduce pumping from wells when water is available from canals and streams by gravity or low head pumping.

3. Repair leaks in pipelines, valves, turnouts and ditches.

4. Reduce seepage from canals and laterals by lining or sealing banks with sealants and repairing all breaks in lined canals and laterals.

5. Consider installation of remote controls or automation of check structures, diversion works, outlet valves and pumping plants, etc., to eliminate need for travel to facility and provide minimum manual operation.

6. Percolate "excess" gravity supplied water into underground storage to raise groundwater table to reduce pumping head from wells.

7. Consider irrigation practices, such as Irrigation Management Services to determine the optimum amounts of water to apply and the time and rate of application. This service is becoming available commercially in many areas and in practically all cases will return more than the investment by savings in power, fertilizer, and water and increased yields.

8. Consider various newer methods of irrigation such as sprinkler and "trickle" or "drip" irrigation.

---

[1] The material for this article was furnished by our Mid-Pacific Region, Sacramento, California.

9. Consider metering and charging for all water used plus a step-increased cost for excessive amounts of water.

10. Keep canals and laterals clean and free of weeds, trash, silt, etc.

11. Drain small open laterals when they are not delivering water to irrigators.

12. Schedule water user needs to operate laterals and canals at maximum capacity, i.e., minimize the seepage rate versus quantity of water delivered ratio.

13. Hold water surface in canals and reservoirs high to facilitate gravity flow and reduce pumping heads at farm turnouts, and pump "lift" - unless this would cause excessive seepage through the canal and reservoir banks.

14. Consider "farmer" operation of delivery structures versus sending a ditchrider out to do it, thereby reducing travel.

15. Consider using pumped irrigation tailwater for additional irrigation rather than letting it flow into streams and drains.

16. Districts should meet with utility companies to work out pumping schedules. This will facilitate increasing efficiency of generation and wheeling by utility companies.

17. When pumping from wells consider drawdown to see if a reduced rate of pumping will reduce pump head and improve pumping efficiency.

18. In well fields use most efficient pump units and wells with the least drawdown.

19. Reduce changes, number of changes of gate positions and turnouts that require electrical power or require a special trip by a canal operator.

20. Replace small laterals that have a high seepage loss with low head pipelines.

Equipment Efficiency Should be Reviewed

1. Check pump efficiency and repair, if needed, to insure efficient use of energy or install machinery and equipment that requires less energy.

2. Improve electrical power factor where possible.

3. At pumping plants use most efficient pumping units or most efficient combination of pumping units.

4. Repair leakage in pipes, valves, fittings, and reservoirs at pumping plants and wells.

5. Install remote or automatic control for operation of pumps to conserve water and reduce travel by operators.

6. Closely monitor bypass lines that permit return flow of pumped water to minimize or avoid "repumping" water.

7. At pumping plants with recirculator stands - schedule and monitor water delivery to insure maximum amount of water pumped is delivered to user and minimum returned to pump sump.

8. Check vehicles being used by operators and maintenance crews to see if most efficient transportation is being used.

9. Schedule repairs, if possible, so a full crew may do the work as a unit to reduce vehicle travel.

Individual Consideration for Automotive Equipment Travel

1. Turn engine off for stops exceeding one minute.

2. Limit the use of air conditioners.

3. Practice safe driving by avoiding sudden starts and stops, thereby saving gasoline, tires, plus wear and tear on the vehicle.

4. Do not travel alone if someone else is going your direction.

5. Operate a car pool, or join a car pool.

6. Accumulate errands and make one trip instead of a trip for each errand.

7. Use mass transportation for travel between cities.

* * * * *

PRECAST STRUCTURES[1]

Have you considered: that your necessary concrete structures and fence enclosures could be examples of community beautification?; that you can develop one more way of entering into the presently popular desire to improve your surroundings and environmental conditions within the community? -- The Salt River Project Has!

Located within a metropolitan and rapidly urbanizing area, we have developed, through reasonable research and planning, the ability to improve the appearance of our facilities at a rather moderate increase in cost. By altering our construction approach, we have reduced construction site time considerably, thus minimizing inconveniences to the public.

Here Is What Has Been Done:

The primary effort was in practical research to determine the areas that should be improved. This proved to be the irrigation structures on both the canal and lateral systems and the "cyclone" type fencing used for enclosing wellsites and other equipment. Once the area of improvement was determined, a type of beautification had to be chosen, and methods developed to apply it. Natural rock appearance was chosen and has received excellent public response. It has made it possible to plan a complete modernization of our construction methods as the cost could be amortized over a long period of time.

The approach developed to aid the reconstruction of our facilities was the establishment of a prefabricating plant to construct concrete panels for structures and fences at a central location. Figure 12 on next page shows how the precast structures are fabricated.

Beautifying rock materials are cast directly into the panels at the time of panel construction using only the wet concrete as a bond. The major cost associated with this type of beautification is the material amounting to between 50¢ to $1.50 per square foot of decorated area.

Materials vary from randomly placed native rock pieces for irrigation delivery structures as shown in Figure 13 on page 19, and some deep well turbine enclosures as in Figure 14, to a more formal decorative rock for canal check structures and other deep well turbine enclosures shown in Figure 15 on page 20.

---

[1] Article written especially for this publication by Mr. Ron Merkley, Supervisor of Pump Construction and Maintenance, and Mr. Tom Sabin, Administrative Assistant, Water Construction and Maintenance, Salt River Project, Phoenix, Arizona.

Figure 12 P25-D-74419

Recent development in the artificial rock industry has allowed us to utilize a light weight artificial native rock as an undetectable substitute for natural rock.

Confining and restrictive demands placed on field construction crews in municipal locations (due to highly congestive traffic) has necessitated that the precasting method be chosen to minimize construction time at the job site.

Field construction time for precast structures has been reduced to approximately one-third of that required for "field" cast structures. This has resulted in further advantages: sufficient curing time (28 days) at the casting bed is maintained to allow the immediate placement of backfill against the structure. Also, traffic loading can be supported immediately after placement without incurring structural damage to our structure. These have served to keep field construction time to a minimum. Although the initial plant investment was an extra cost, the above advantages have been achieved at no increase in the costs per unit.

Utilizing the above material concept for beautification, the Salt River Project openly invites any interested party or business to contact us about our matching the beautification materials on our irrigation facilities (located on or adjacent to their property) with materials similar to that they placed on their building for beautification purposes, see Figure 16. This practice has increased the pride of the property owner

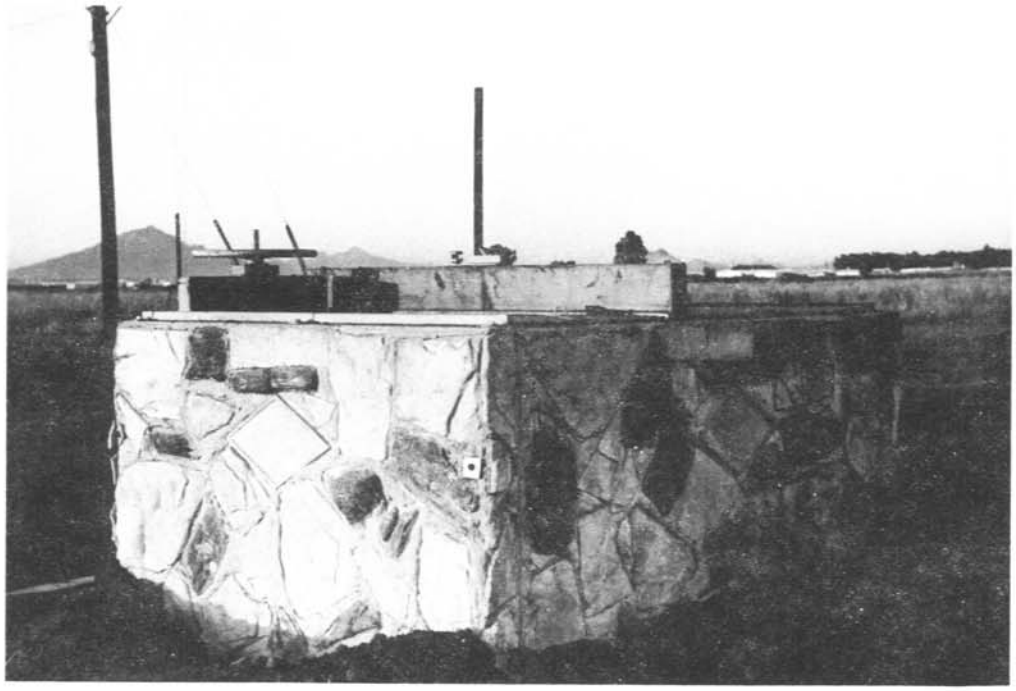

Figure 13 P25-D-74416

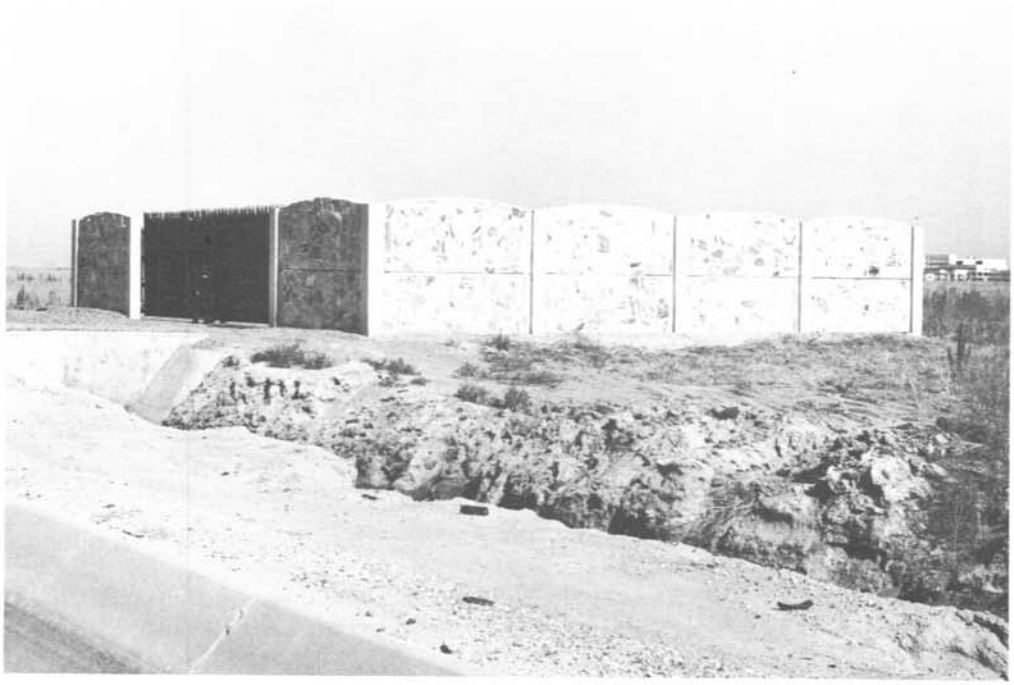

Figure 14 P25-D-74415

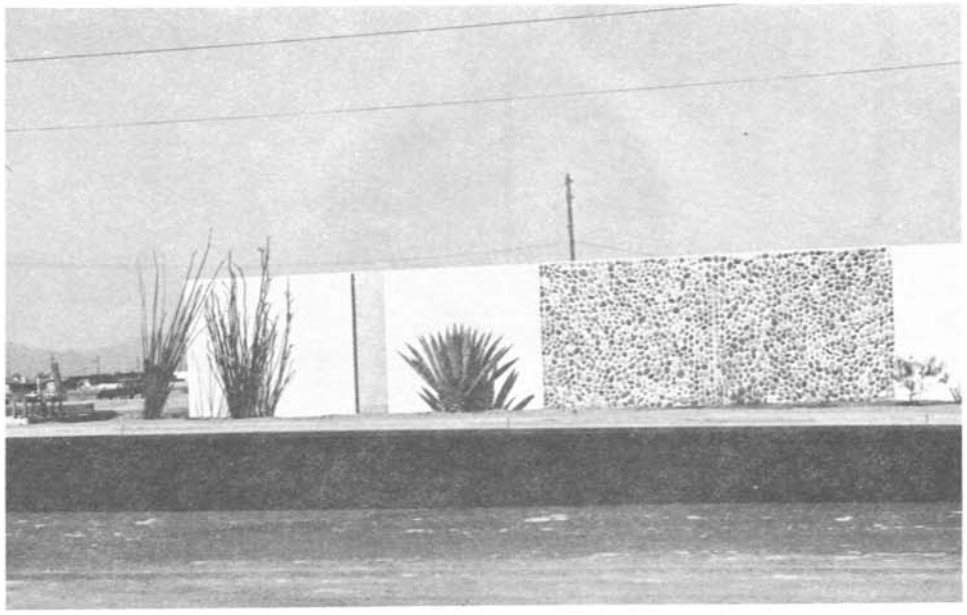

Figure 15 P25-D-74417

Figure 16 P25-D-74418

in our facilities to an extent that it has aided us in protecting and maintaining our facilities from vandalism, graffiti and debris.

If additional information is desired regarding this program, please write to the General Manager, Salt River Project, P. O. Box 1980, Phoenix, Arizona 85001.

* * * * *

ROLLOVER PROTECTIVE STRUCTURES ON MOTOR GRADER
PREVENT SERIOUS INJURY[1]

Figure 17 P245-713-5415 NA

Figure 18 P245-713-5418 NA

On June 22, 1973, a Bureau-owned motor grader was traveling south on a narrow gravel road when it was involved in a rollover incident. The left front wheel of the grader contacted the soft shoulder of the roadbed, pulling the front end of the grader down the 1:1 slope until the grader rolled over on its side. The hard road surface and pea gravel on the road surface nullified the braking action of the equipment. The factory installed rollover protective structure on the equipment kept the operator from being seriously or possibly even fatally injured.

The photographs Figures 17 and 18 show the motor grader immediately after the rollover. The photograph to the left was taken looking south to north showing front view of the rollover protective structure (cab).

[1] Reprinted from the Reclamation Safety News, Second Quarter 1973.