WATER OPERATION AND MAINTENANCE

BULLETIN NO. 85

SEPTEMBER 1973

IN THIS ISSUE

CHEMICAL GROUT EXPEDITES TUNNEL REPAIR
VANDAL PROOF GAGING STATION COMPONENTS
A NEW METHOD OF REPAIRING BROKEN BARBED-WIRE FENCES
UNDERWATER ESCAPE AND OCCUPANT SURVIVAL FROM VEHICLES
HIGH PRESSURE CYLINDERS (OXYGEN)
INCREASE YOUR HAMMER'S UTILITY
PROPER TIRE INFLATION ESSENTIAL TO SAFETY, PERFORMANCE, ECONOMY
TIMING TIPS FOR TRUCKS AND TRACTORS
MECHANICAL CLEANING MACHINE FOR CONCRETE CANAL LININGS
CRANE HOOK FAILURE

UNITED STATES DEPARTMENT OF THE INTERIOR

BUREAU OF RECLAMATION

The Water Operation and Maintenance Bulletin is published quarterly, for the benefit of those operating water-supply systems. Its principal purpose is to serve as a medium of exchanging operation and maintenance information. It is hoped that the reports herein concerning laborsaving devices and less costly equipment and procedures will result in improved efficiency and reduced costs of the systems for those operators adapting these ideas to their needs.

To assure proper recognition of those individuals whose suggestions are published in the bulletins, the suggestion number as well as the person's name is given. All Bureau offices are reminded to notify their Suggestions Award Committee when a suggestion is adopted.

* * * * *

Division of Water Operation
and Maintenance
Engineering and Research Center
Denver, Colorado 80225

COVER PHOTOGRAPH:

Drilling grout hole with electric percussion drill. Three-fourths-inch-diameter carbide-tipped bits gave excellent results with relatively low wear. Carter Lake Pressure Tunnel, Loveland, Colorado. Photo P245-713-5243 NA

UNITED STATES DEPARTMENT OF THE INTERIOR
Rogers C. B. Morton
Secretary

BUREAU OF RECLAMATION
Gilbert G. Stamm
Commissioner

WATER OPERATION AND MAINTENANCE
BULLETIN NO. 85

September 1973

INTRODUCTION

On page 1, the first article describes the chemical grouting operations of Carter Lake Pressure Tunnel, on the Colorado Big Thompson Project.

Vandalism to gaging station components is a real problem in remote areas. The article starting on page 6, describes how personnel of the North Platte Projects Office took care of the situation.

An easy method to mend broken strands of barbed-wire fences is shown in an article on page 9.

Some conclusions to a series of experiments on underwater escape and occupant survival from vehicles, can be found in an article on page 10.

As pointed out in the article on page 11, proper care and handling of high pressure oxygen cylinders is most important.

A short article at the bottom of page 12, describes how to increase your hammer's effectiveness.

"Proper Tire Inflation Essential to Safety, Performance, Economy," is the title of the article to be found on page 13.

Some timely tips on page 14, for static timing of trucks and tractors, in the absence of a timing light.

Beginning on page 15, an inexpensive cleaning machine for concrete-lined canals, developed by the Orland Unit Water Users Association, is described and illustrated.

How can crane hook failures be prevented? The answer to this question can be found on page 18.

CHEMICAL GROUT EXPEDITES TUNNEL REPAIR[1]

What do you do when a major aqueduct, serving as a connecting link between the source and the supply of water for several thousand farm and municipal water users, suddenly starts to leak excessively--and you can't plug the leak?

The Bureau of Reclamation and its water-user customers were faced with such a problem when an aqueduct in Colorado, an 8-foot concrete-lined pressure tunnel, developed cracks and subsequent serious leakage.

Carter Lake Pressure Tunnel

The aqueduct, Carter Lake Pressure Tunnel--a feature of the Bureau's Colorado-Big Thompson project--is located 9 miles southwest of Loveland, Colorado. It links the Flatiron Power and Pumping Plant with Carter Lake, a project water storage facility.

All water for the Carter Lake storage facility is pumped through the 8-foot diameter reinforced pressure tunnel. The lake stores water for distribution to water users in the foothills area of the Colorado-Big Thompson project.

Turbine-Generator

The tunnel also serves as a source of power to operate a reversible turbine-generator unit, 8,500-kilowatts, which produces electric power at the Flatiron Power and Pumping Plant. The reversible unit also operates a pump-motor, 13,000-horsepower, to lift the water 297 feet from the plant afterbay for storage in Carter Lake.

Completed in 1952, the tunnel was first operated in 1954. During routine inspection in 1955, leakage was noted about 200 feet inside the tunnel from the powerplant inlet. At this point spalling (cracking and flaking concrete) was occurring. The cause of the spalling could not be pinpointed but a shifting of the rock formation was suspected.

To meet the problem, the spalled concrete was removed and a steel ring 18 inches wide was installed on the inside of the lining. The area behind the lining was repaired with standard cement grout.

More Leakage

No further problems were encountered until March 1969 when excessive leakage at ground surface was observed above the tunnel. The area that

---

[1] Reprinted from the Winter 1973 issue of the Reclamation Era. Written by Mr. C. W. Griffin, Regional Engineer, Bureau of Reclamation, Lower Missouri Region, Denver, Colorado.

had caused trouble in 1955 apparently shifted again resulting in spalled and fractured concrete 2- to 3-feet wide.

The usual repair methods were again employed. The damaged concrete was removed and replaced. A steel segmented ring 6-feet wide was then installed over the repaired area, and the contact area between the lining and rock formation was grouted over an area 300 feet long. A total of 2,168 sacks of cement was used in grouting.

The next inspection indicated this repair had stopped all leakage with the exception of one "spring," which continued to flow approximately 20 g.p.m. (gallons per minute). This flow remained constant until the summer of 1971 when large increases were noted.

Still More Cracking

Inspections revealed that additional cracking had taken place in the lining in the general vicinity of the repaired area. By January 1972 the flow in the spring had increased to 80 g.p.m. and a number of surface seep areas had developed. It became obvious that regular grouting methods were inadequate and that other corrective measures were required immediately.

Engineers considered various repair methods. The use of linear plate through the critical area was evaluated, but this as well as other proposed schemes was too expensive.

Additional problems were encountered as repairs had to be intermittent because of pumping requirements for the Carter Lake facility. Another important factor in considering methods of repair centered around tunnel access. There were three ways into the tunnel--all through 19-inch net diameter manholes.

Recommendations were developed to try a chemical grout with a still-unknown efficiency in this type of application. Final decision to move ahead with this chemical grouting process utilizing Bureau forces was made in concurrence with the Northern Colorado Water Conservancy District.

AM-9 Grout Used

The grout used is known as AM-9, a mixture of two organic monomers which when properly catalyzed produce stiff gels. Catalysts consist of DMAPN, a liquid, and ammonium persulfate.

The grout is a dry powder and was mixed with water along with the catalyst DMAPN in one supply tank. Ammonium persulfate was mixed with water in a separate tank and a red dye (Rhondamine WT) was added to the mixture to improve identification of travel along cracks. The

viscosity of AM-9 grout solution remains essentially the same as water until the gel forms.

Figure 1 below, shows a general view of the tunnel lining after completion of grouting in this area. Wall is essentially dry as compared with numerous seeps before grouting with AM-9 Chemical Grout.

Figure 1 P-245-713-5240 NA

Access Problems

Because of the access problems, considerable time was required to assemble the necessary equipment and chemical supplies. All drilling, grouting, and allied equipment had to conform in size or be made in sections small enough to pass through the 19-inch openings.

The grout pump, electric transformer, distribution panel, and ground fault interrupters are manufactured equipment. All other items, such as cable rails, transformer and pump carts, grout packers, special hand tools and others, were made in the Flatiron Powerplant machine shop. Portable insulated cables carried 440-volt power into the tunnel with the stepdown transformer at the grout point providing 115-volt power for tools and lights.

Figure 2 on next page, shows a closeup view of reel cart used in Carter Lake Pressure Tunnel repair. All items in this cart and reel can be broken down to be inserted through 19-inch diameter manhole. Box at left contains transformers and ground fault detectors for protection

of personnel. Box at right may be used for storage of small tools and other items. Cart will travel in either direction by switching the tongue shown on the small wheel to the right, and Figure 3 on page 5, shows a view of grout packer in hole with chemical grout pump at lower left corner of the photograph. All work was done by Project Operation and Maintenance personnel.

Figure 2 P245-713-5200 NA

Grouting Begins

Chemical grouting began May 18, 1972. The first step in repairing the tunnel was to drain it completely. Seep areas, indicated by water leaking back into the tunnel generally along hairline cracks in the lining, were marked immediately. Next, 3/4-inch diameter holes were drilled in the lining intersecting these cracks 5 to 6 inches from the lining surface. Using a grout packer developed in the Flat-iron powerplant machine shop, (see Figure 3) a solution of AM-9 was then injected under pressure ranging from 25-300 p.s.i. (pounds per square inch) depending upon location.

In tracing the red dye, grout travel up to 22 feet was observed along the cracks. Travel of 3-5 feet either way from the grout hole was more common. Nine hundred sixteen gallons of chemical solution were pumped into the lining over a total distance of 2,200 feet. Refilling of the tunnel occurred on June 22, 1972. The previous leakage of

80 g.p.m. had been reduced to 2-3 g.p.m. Initial surface leakage from previous seep areas was zero.

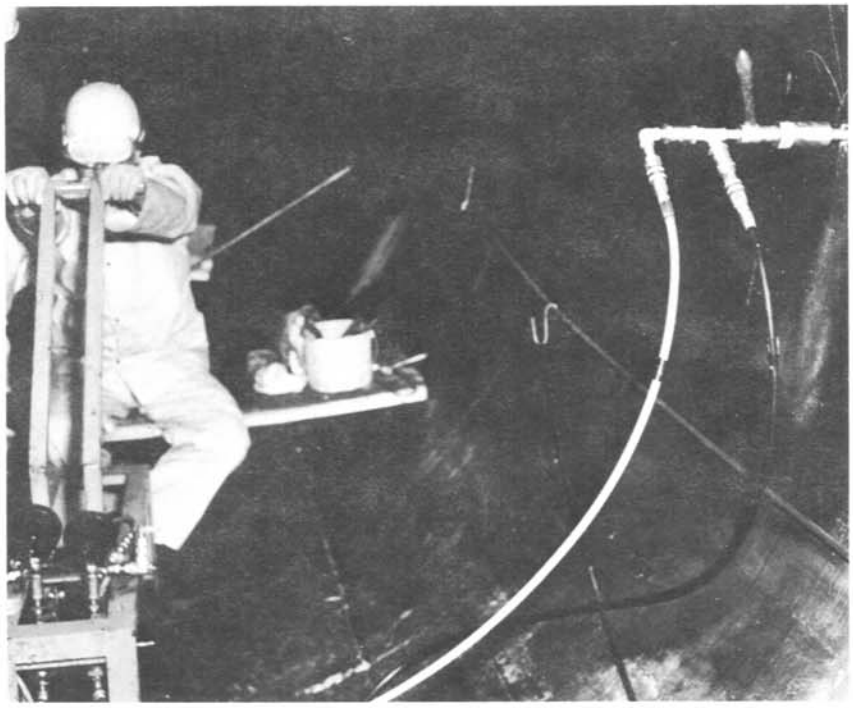

Figure 3 P245-713-5242 NA

Grouting Successful

Results of this initial grouting indicated that the concept of chemical grouting was valid. Further grouting was performed during July and August and after refilling the tunnel, no surface leakage has been observed from the seep areas or from the spring.

Bureau of Reclamation engineers say results have exceeded all expectations. They caution, however, that no durability or permanent conclusions can be made after only a few weeks of operation. In general, they feel that more expensive repairs can be deferred for an indefinate period. The engineers also have high hopes that the resiliency of the gel will adapt to the shifting of the lining if it occurs in the future.

* * * * *

VANDAL PROOF GAGING STATION COMPONENTS[1]

The idea presented in this article is designed to protect radio-operated stream gages from gun-toting vandals. Stream gages are an expensive and delicate instrument, and are usually housed in a gaging station made from corrugated steel to protect the recording equipment. See Figure 4 below.

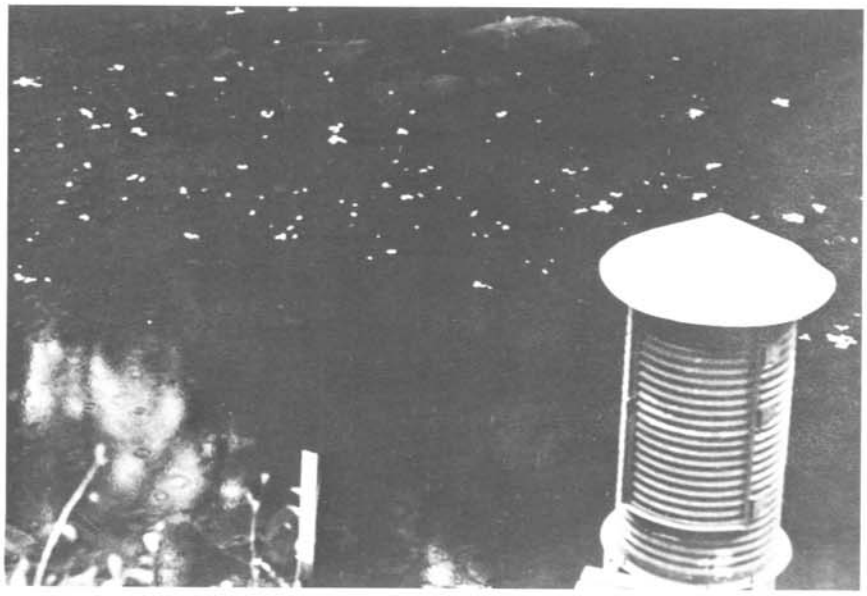

Figure 4 PX-D-54339

There are four of these gaging stations located on the North Platte Project, Casper, Wyoming. Two of these stations are located in extremely remote areas and are subject to vandalism by individuals using the metal buildings for target practice.

To protect this equipment, project personnel have incorporated the use of a specially designed quarter inch steel frame that fits around the radio transmitter, as shown in drawing (Figure 5) on the next page. These protective frames have been in use for six years and have proven to be very effective protection.

A typical corrugated steel gaging station that shows the stream gage recorder can be seen in the photograph (Figure 6) on the following page. Personnel of the North Platte Project, reports that these gages can also be successfully protected. A very simple method is used. A quarter inch steel plate 14 inches high is installed around the inside of the gage house at the recorder level.

---

[1] Material for this article was furnished by the North Platte Projects Office, Casper, Wyoming.

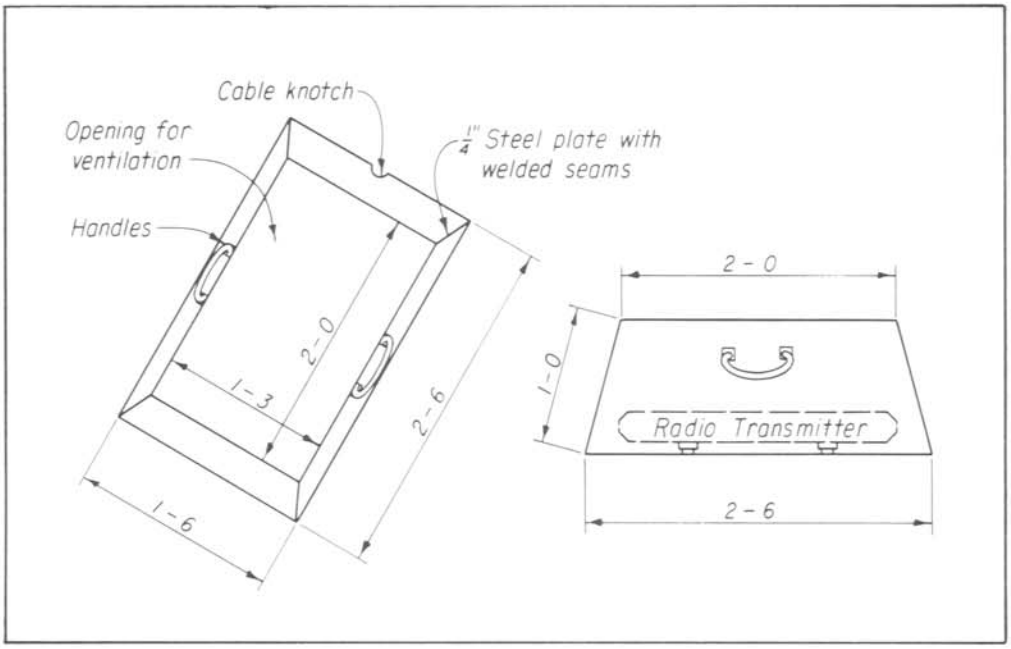

Figure 5

Figure 6 P20-D-73804

Vandals have no respect for property of any kind when they are bent on destruction, and the doors of some of these current-meter gaging stations have been broken open on numerous occasions and the equipment destroyed. Therefore, to prevent further destruction, maintenance personnel designed a unique steel plate box to cover exposed padlocks, and it has proven instrumental in preventing the locks from being pried open with a bar or tire iron.

The locks take a little longer for authorized personnel to open, but operating personnel overlook this inconvenience because of the effectiveness of this device. A detailed drawing of the protective steel box is shown in Figure 7 below.

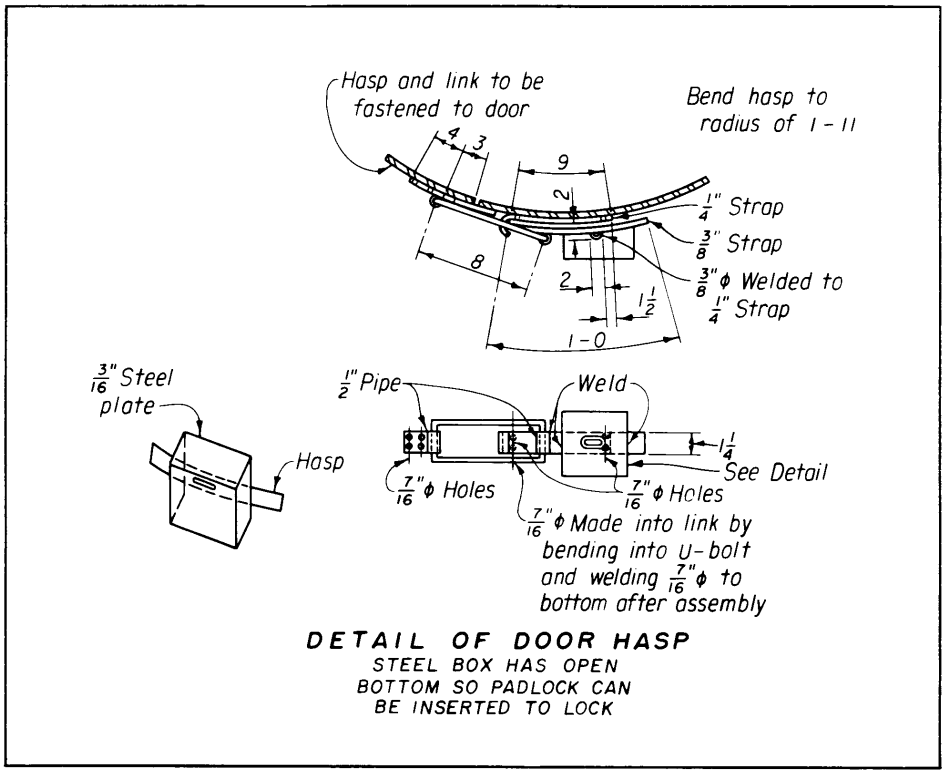

Figure 7

If further information is desired regarding these vandal-proof installations, please write to the Regional Director, Lower Missouri Region, Building 20, Denver Federal Center, Denver, Colorado 80225.

* * * * *

A NEW METHOD OF REPAIRING BROKEN BARBED-WIRE FENCES[1]

Since early in the active life of the Water Project there have been many instances where operations and maintenance personnel produced a technique, a device, or a new application which could only be described as "creative": truly something out of nothing, or something more out of what was available. The item published here, sent in from the San Joaquin Field Division, is another example of that creative spirit.

Description

Electricians are familiar with a commercially-available device for joining electrical conduit wire together consisting of a short length of steel or copper tubing and a crimping tool. Both the crimper and the tubes can be had in a variety of sizes, from very small to large, and are made by a variety of manufacturers. This standard crimping equipment was adapted by Larry Lowel, of Materials and stores, and Terry Bradshaw, of Maintenance, to solve the problem of how to restore the sometimes-broken fences in the Field Division without having to replace barbed-wire strands or fight to twist short ends together with a pair of pliers. The men chose one of the smaller-sized crimping tools (TB-8) and steel tubes as couplers. In action, the broken ends of the wire are inserted into a tube and enough tension is exerted on the fence to lap the wire-ends slightly. Then another man simply crimps the wires together. The repaired fence is just as strong as before, and the splice was made in a shorter time with much less fuss and effort. Figure 8 above, shows a pair of wires joined in this manner. It is a handsome splice and a durable one; all the result of a little creative thinking.

Figure 8 P214-D-73803

If further information is desired regarding this method of repairing barbed-wire fences, please write to the address shown at the bottom of the page.

---

[1] Reprinted by special permission of the Editor, from Technical Bulletin No. 17, dated March 1973, State of California, Department of Water Resources, Division of Operations and Maintenance, 1416 Ninth Street, Sacramento, California 95814.

UNDERWATER ESCAPE and OCCUPANT SURVIVAL from VEHICLES[1]

Did you know that in December 1970, Oklahoma University Research Institute, Norman, Oklahoma, conducted a series of tests on escape worthiness of vehicles and occupant survival? They used people, trained SCUBA divers, as passengers in their test vehicles and some of the conclusions, related to the human element, are included here:

> "1. The recommendation made earlier by others to escape from a vehicle while it is still floating on the surface, rather than submerging and waiting for the pressure to equalize before exiting, was supported by these tests.
>
> "2. The air bubble entrapped in this vehicle could be breathed much less than one minute by the front seat passengers and only slightly greater than a minute by experienced divers in the rear seat.
>
> "3. The possibility of doors jamming for reasons other than overpressure on the vehicle does exist, and this problem should be researched further."

The tests found that it is possible, but difficult, to breath air trapped in the vehicle for a very short time after the water level rises. However, even trained divers found this process rough going. The diver-passengers also experienced varying degrees (from "some" to "a great deal") of difficulty in opening vehicle doors even after the water pressure had, supposedly, equalized. The conclusions seemed to emphasize the necessity for immediate escape, even through a window when water is pouring in over the lower part of the opening. This is a change from earlier tests where the tendency was to assume that the inrush of water would be too much for safe exit.

Below is an interesting statement on the method of escape through a vehicle window that appears on Page 3-89 of the Oklahoma University report:

> "The right front passenger...demonstrated that escape can be effected by an adult male against the rush of water entering the window. Escape was accomplished by grasping the rain guard over the top of the door and pulling the body through the window with the back against the door, looking upward. The divers reported no difficulty with this method of escape."

So, the watchword is: Get out <u>fast</u> any way you can, even through a window. <u>Don't wait</u>!

---

[1] Reprinted by special permission of the Editor, from Technical Bulletin No. 13, dated March 1972, published by the State of California, Department of Water Resources, Division of Operations and Maintenance, Sacramento, California.

HIGH PRESSURE CYLINDERS (Oxygen)[1]

There's more oxygen in the world than any other element, and it's the most important one, too, because it's necessary to life.

Air is 21 per cent oxygen, 78 per cent nitrogen. That seems to be just the right proportion for us. Too much wouldn't be good nor would too little. We could take much more oxygen in the air, but it would drive us too hard. We'd wear out sooner. If the oxygen gets down to about 16 per cent (as it may in a well or tank) a person gets short of breath; at about 10 to 12 per cent, he passes out. Probably you've all read newspaper accounts of someone suffocating in a silo. Usually, the cause is lack of oxygen, which has been used up by the fermenting silage.

Fire, too, depends on oxygen. A flame safety lamp or a candle will go out if the oxygen drops below about 15 or 16 per cent. If there were very much more oxygen in the air than there is, it would increase the fire hazard in two ways; it would make things catch fire easier and make them burn faster.

As you may know, oxygen comes in cylinders under high pressure (2,400 pounds per square inch), in order to get as much as possible into each cylinder. Fifty years or so ago the pressure wan't run so high because the cylinders made then couldn't stand it. But the pressure has been increased along with the strength of the cylinders. Present day cylinders are safe if handled properly. Yet at 2,400 pounds per square inch, the force trying to blow each cylinder to smithereens runs into more tons than I like to think about. It's just plain good sense to avoid putting more load on steel fighting to hold that kind of pressure.

Impact stresses are the worst. If a full oxygen cylinder drops from the tail gate of a truck onto a concrete pavement, the impact stress, if it hits just right, can run into tons. It may be just too much, and if it is you'll get a real bang. Even letting one tip over from a standing position is dangerous.

Cylinders should not be allowed to stand in the sun either. The temperature of the steel can easily reach 130° to 140° in the sun on a hot summer day and that will run the pressure up a lot. Keep fire away, too. It doesn't take much fire to turn the cylinders into bombs--real high-powered ones.

---

[1] Reprinted in part from the National Safety Council publication, Industrial Supervisor, dated February 1973.

The valve assembly is the weakest point on a cylinder. A stiff wallop can break it off. That's why the cap should always be kept on except when the cylinder is in use. It's also why the cylinder should be kept securely fastened when it's on the welding truck or when it's standing on end.

If the valve assembly breaks off, the oxygen rushing out quickly heats the metal around the opening to its ignition point and the opening gets larger fast. This builds rocket thrust which could result in the cylinder becoming a missile. The hot blast of oxygen and burning metal from the end of the cylinder creates a very serious danger even if the cylinder remains in place. Even if it doesn't, that hot blast of oxygen and burning metal shoots out a long way and is a very bad fire-setter, indeed.

One last point--never use oxygen as a substitute for compressed air.

The compressed oxygen will furnish the pressure all right, but it's apt to throw in a first-class explosion to boot.

* * * * *

INCREASE YOUR HAMMER'S UTILITY

(Reprinted by permission of GRIST, September/October 1972 issue, a publication by the National Conference on State Parks, Washington, D.C.)

When driving nails into hardwood, the nails sometimes meet with knots or other hard areas and bend under the pressure of the hammer. To prevent this from happening, Raymond E. Norman, maintenanceman at Homestead National Monument, Nebraska, suggests dipping the nails into a lubricant prior to hammering.

In order to made this procedure even easier to accomplish, Norman drilled a 1/2-inch hole about 1-1/2-inch into the handle of his hammer and filled the hole with beeswax. Thus, he is never hammering without a supply of the lubricant. Beeswax is not the only "goo" which works either, axle grease or similar substances are just as good.

The practice of lubricating nails will ease their entry into wood and will help ease temperaments sharpened by fingers smashed with hammers.

* * * * *

PROPER TIRE INFLATION ESSENTIAL TO SAFETY, PERFORMANCE, ECONOMY

Proper tire inflation is essential to safe, comfortable, and economical driving, yet it is one of the most neglected aspects of car maintenance in the United States.

One of every four cars examined in a recent government survey had at least one seriously under-inflated tire (four psi or more below the inflation pressure recommended for the vehicle). A private study found that 80 per cent of the vehicles checked had tires that were under-inflated or over-inflated by two psi or more.

No single pressure level for a given vehicle's tires is proper for all uses. Car manufacturers select tires with appropriate load-carrying capacities; then recommend proper inflation pressures for front and rear tires for both light and heavy loads. These recommendations are displayed in the operator's manual, on the doorframe, in glove compartment panels, and the like.

Under-inflation results in increased tire flexing, which can cause excessive tire temperatures and invite tire failure. Vehicle stability and handling can also be adversely affected. Severe under-inflation of rear tires can cause cars to oversteer or sway laterally, hindering control of the car.

Over-inflation makes tires ride hard--magnifying, rather than absorbing road shocks. Over-inflated tires are also more vulnerable to damage from road impacts sustained in hitting chuckholes or other objects.

On most passenger tires, under-inflation increases wear on the edges of the tread, while over-inflation increases wear on the center portion. Under-inflation from 4 to 12 psi can cut tire life from 10 to 40 percent.

Although service station tire pressure towers are used in major metropolitan areas, hand pressure gauges have, generally, been found to be more accurate. Properly care for, they can be very helpful in good tire maintenance.

Why not have your Service Station attendant check the pressure of your tires today to be sure that you are receiving the safest, most comfortable and economical tire ride possible?

* * * * *

Courtesy: Tire Industry Safety Council

TIMING TIPS FOR TRUCKS & TRACTORS[1]

To some Auto mechanics, performing a tune-up without a timing light is like playing golf without a putter. In both cases, while it doesn't make the job any easier it can be done. As for tune-up, static timing can substitute for an absent or malfunctioning timing light.

A leading spark plug manufacturer outlines the following procedures for static timing:

1. Bring the No. 1 cylinder up on compression and align the timing marks to the recommended specification. This procedure assures that the timing cylinder (most often No. 1) is at top dead center (TDC). The distributor may at this point be removed for servicing or replacement.

2. Reinstall the distributor to its proper place. Replace the primary wire and spark plug cables.

3. Connect a 12V test lamp to the distributor side of the coil.

4. Very slowly turn the distributor housing opposite the direction of shaft rotation until the test lamp lights. Stop immediately! Do not pass this point or turn the distributor housing back and forth to locate it. Should you turn the housing too fast or too far beyond the point the light goes on, turn back to the original position and repeat the procedure.

5. When you have located the distributor in the proper position (with test lamp lit), tighten the hold-down bracket. With the test lamp still connected, hand-turn the engine over two complete revolutions to check the timing.

* * * * *

The largest riverflow ever measured--about 4 billion gallons per minute (about 9 million cubic feet per second)--was recently clocked on the Amazon River by a team of U.S. and Brazillian hydrologists.

The average flow of the Amazon is some 2.6 billion gallons per minute, more than 4 times the average discharge of the Congo River, and about 10 times that of the Mississippi's average discharge. The Amazon's flow accounts for about 15 percent of all the fresh water discharged into the oceans by all the rivers of the world.

---

[1] Reprinted by special permission of the Editor from an article in the April 1973 issue of Arizona Farmer-Ranchman.

MECHANICAL CLEANING MACHINE
FOR
CONCRETE CANAL LININGS[1]

The cleaning machine shown in a series of photographs in this article was designed and fabricated in the maintenance shop by personnel of the Orland Unit Water Users' Association, Orland, California. This inexpensive machine is driven by a gasoline engine that propels a chain-driven nylon brush. The nylon brush scrubs the algae and silt loose from the concrete lining and floats it harmlessly down the canal. This is a one-man operation and it was reported to be a very easy machine to handle.

Figure 9 below, shows a full view of this unique cleaning machine at work; note the algae and silt in the foreground that was scrubbed loose by the rotation of the brush. Figure 10 on next page shows a rear view of the machine. It is light enough to be handled by one man wearing hip boots working in the canal with the machine as shown in the photograph.

Figure 9 P214-D-73799

[1] The Orland Unit Water Users' Association Orland, California, provided the material for this article.

Figure 10 P214-D-73801

Figure 11 shows the cleaning machine being loaded aboard a light frame trailer hooked to a pickup truck for transporting, and Figure 12 on the next page, shows how the machine looks when loaded ready to be moved to a new location.

Figure 11 P214-D-73800

Figure 12 P214-D-73802

Additional information regarding this mechanical cleaning machine can be obtained by writing to the Orland Unit Water Users' Association, P. O. Box 816, Orland, California 95963.

* * * * *

Irrigation agriculture in North America came late in human history. An exception is the chinampa system of Mexico, which is still in use. Chinampas started as reclamation measures to drain swampy areas and consist of a complex system of drainage canals, intercanal strips, narrow islands, and peninsulas. By the 15th century, the entire valley of Mexico was a giant hydraulic system based on land drainage, intensive agriculture, and manipulation of water.

Flood-water farming on alluvial fans, still practiced by Hopi Indians, also dates from ancient times. Flood-plain agriculture in North America was a later development.

CRANE HOOK FAILURE[1]

The crane hook shown on the following page was in normal use for only a few months when it failed under a partial loading. The two lower pictures are closeup views of the broken ends and graphically illustrate the reason for failure. The two pieces fitted together in the center photograph show the relative failure point.

Similar hook failures can be prevented with a good sound inspection program as outlined in the following regulations.

Occupational Safety and Health Standards

Section 1910.179, Overhead and gantry cranes (j)(3)(ix): "Crane hooks. Magnetic particle or other suitable crack detecting inspection should be performed at least once each year."

Reclamation Power Maintenance Instruction No. 24

Failure of a crane hook can result in extensive damage to equipment and serious injury to personnel.

To assure the integrity of all Bureau crane hooks, the following program is recommended:

1. Discontinue the practice of painting crane hooks and remove the paint from existing hooks to facilitate visual inspection.

2. A visual inspection of each crane hook should be made prior to any heavy lifting and on a monthly basis.

3. Crane hooks should be measured annually and discarded if the throat measurement has increased 15 percent from the original dimension.

4. Incipient cracks are not always visible. Each hook should therefore be checked annually for cracks by being subjected to a Magnaflux, Zyglo, or some other suitable nondestructive crack detection test. If equipment for these tests is not available in the Region or from local test equipment rental sources, this office will aid in locating such equipment upon request.

---

[1] Reprinted from the Reclamation Safety News, Fourth Quarter and Annual Report, distributed March 1973.

CRANE HOOK FAILURE!

PX-D-73037

PX-D-73038

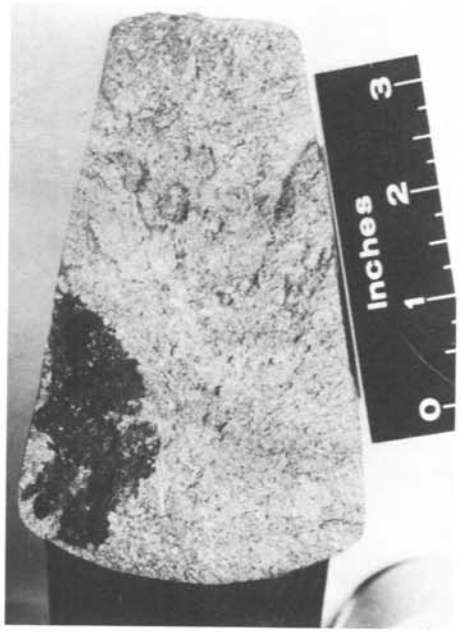

PX-D-73039

* * * * *

GPO 849-985