United States Department of the Interior, Bureau of Reclamation

IRRIGATION OPERATION AND MAINTENANCE

BULLETIN NO. 73

July, August, September 1970

LAST COPY - DO NOT REMOVE

In This Issue:

Repair of Concrete Canal Lining
Jack-Cart for Dual-Wheel Truck Servicing
Portable Power Cords for Use in Maintenance and Emergencies
Sandblast Gun Modification
All Purpose Maintenance Vehicle
Batteries for Remote VHF Radio Repeaters
Winterizing of Irrigation Pumps

The Irrigation Operation and Maintenance Bulletin is published quarterly, for the benefit of irrigation project people. Its principal purpose is to serve as a medium of exchanging operation and maintenance information. It is hoped that the reports herein concerning labor-saving devices and less costly equipment and procedures, developed by resourceful project people, will result in improved efficiency and reduced costs of the systems for those operators adapting these ideas to their needs.

To assure proper recognition of those individuals whose suggestions are published in the bulletins, the suggestion number as well as the person's name is given. All Bureau offices are reminded to notify their Suggestions Award Committee when a suggestion is adopted.

* * * * *

Division of Irrigation Operations
Office of Chief Engineer
Denver, Colorado 80225

COVER PHOTOGRAPH:
Application of rubberized asphalt mastic in the repair of the concrete lining on the New York Canal, Boise Project, Idaho, using a heavy-duty pump. Photo P3-D-64302

IRRIGATION OPERATION AND MAINTENANCE
BULLETIN NO. 73

July, August, September 1970

INTRODUCTION

Starting on page 1, an article entitled "Repair of Concrete Canal Lining," describes some of the problems that can be encountered with concrete canal linings and the methods and materials available for repair.

An idea for the construction of a Jack-Cart for use in servicing the dual wheels of trucks can be found on page 10.

On page 12, an article entitled "Portable Power Cords for use in Maintenance and Emergencies," points out the importance of the right size power cord or cable when using power tools in conjunction with portable powerplants.

The modification of a sandblast gun, shown on page 14, was suggested by an employee of the Rio Grande Project, and all reports indicate that it has been very successful in cutting parts replacement costs.

"All Purpose Maintenance Vehicle," is the title of an article on page 16. Time consuming trips to the maintenance shop prompted the building of a truck by the Exeter Irrigation District in California.

Selection of the right type of battery for VHF radio repeaters is very important in remote area stations, as pointed out in the article to be found on page 18.

Winterizing of wet sump pumping plants and steps taken for their protection is a question frequently asked by irrigation people. Some thoughts on the subject from experience gained can be found on page 20.

REPAIR OF CONCRETE CANAL LINING 1/

Concrete is relatively brittle and has a low tensile strength. It has a tendency to shrink during curing, expand when moisture is absorbed, and expand and contract due to temperature changes. For these reasons it is subject to cracking. Additional cracking may result from frost heaving, hydrostatic back pressures, settlement of foundation due to low density soils, piping of the foundation, or expansion of swelling foundation soils. These characteristics of concrete and foundation problems must be recognized in original design as in repair. In maintenance work the cause of excessive cracking or lining failures should be determined if possible before the type of repair is selected.

Cracking in concrete lining is usually controlled by the use of contraction joints or weakened planes spaced at proper intervals so that the cracks will occur in these joints instead of in a random pattern. When a concrete lining is placed by hand, it is a common practice to construct the lining in alternate panels. Since the bond between the panels is weaker than the slab itself, this should confine most of the cracking to the construction joints. A formed joint should be made at the junction of slabs and filled with elastic material to prevent the lining from leaking.

Contraction Joints

The most common type of contraction joint is a narrow groove formed in the concrete to a depth of at least one-third of the thickness of the lining. This forms a weakened section where cracking will usually occur.

Transverse joints--A study of information on this subject indicates that the transverse contraction joint spacing of 10 feet for unreinforced concrete lining in smaller canals is usually adequate. Spacing of joints not to exceed 15 feet is satisfactory for unreinforced lining in larger canals.

Longitudinal joints--Longitudinal joints or grooves are usually not required in the smaller canals to control the cracking. However, in larger canals where the side slope distance is larger than 15 feet, it is good practice to construct grooves at a maximum 15-foot spacing in the sides and invert.

1/ Much of the material in this article was adapted in part from the Concrete Manual, Seventh Edition, and can be obtained from the Office of Chief Engineer, Bureau of Reclamation, Building 67, Attention: Code 841, Denver Federal Center, Denver, Colorado 80225.

Crack and Joint Fillers and Sealers

Since cracks in concrete lining are always caused or associated with movement of the slab, it is essential to seal them with a flexible material, one which will remain flexible and bond to the concrete. This is essential if a canal is to effectively fulfill its purpose for watertightness. Also, a good seal will prevent entrance of sand and silt into the cracks, thereby preventing excessive stress in the lining when expansion occurs.

Damage from Back Pressure or Subgrade Conditions

For the repair of concrete lining where damage has occurred from back pressure or unstable subgrade conditions, several methods of repair and types of joints are sometimes necessary. The following drawing illustrates the replacement of a section of lining where back pressure results in damage and part of the lining must be replaced. In the drawing below note the 5:1 protective slope above the lining and the sandy-clay material placed near the top. This will prevent water from getting in behind the lining from above.

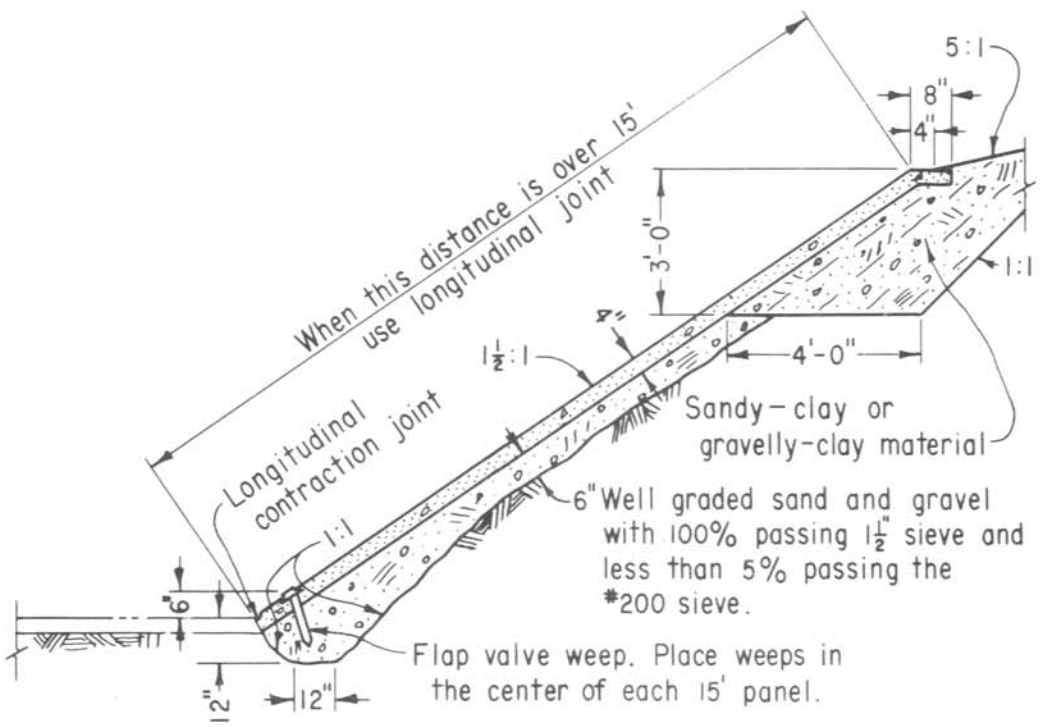

LINING REPAIR WHERE BACKPRESSURE EXISTS
FIGURE 1

A flap valve weep near the toe of the side lining is shown in the drawing on the preceding page. This is essential to the elimination of hydrostatic back pressure against a concrete lining. The following two photographs and Figure 2 on the next page show flap-valved weeps in detail.

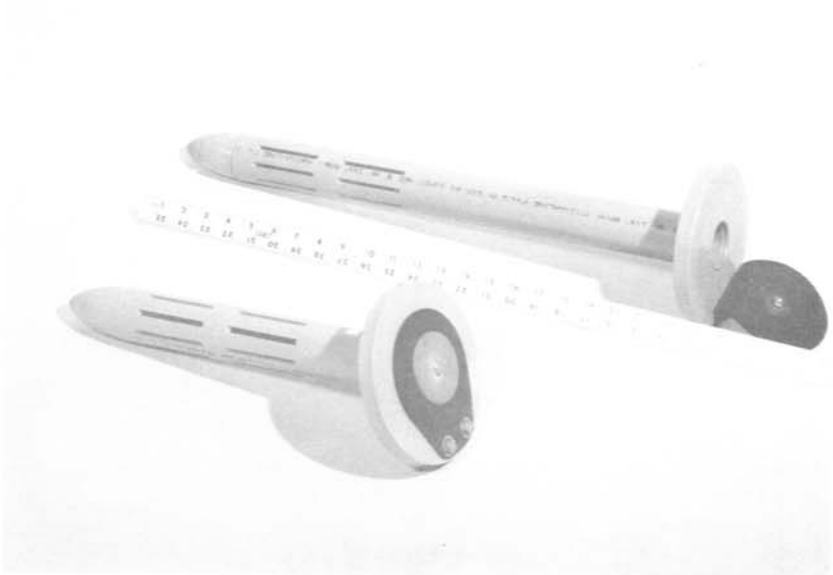

Photograph 1. Photo PX-D-67498

Photograph 2. Photo PX-D-67499

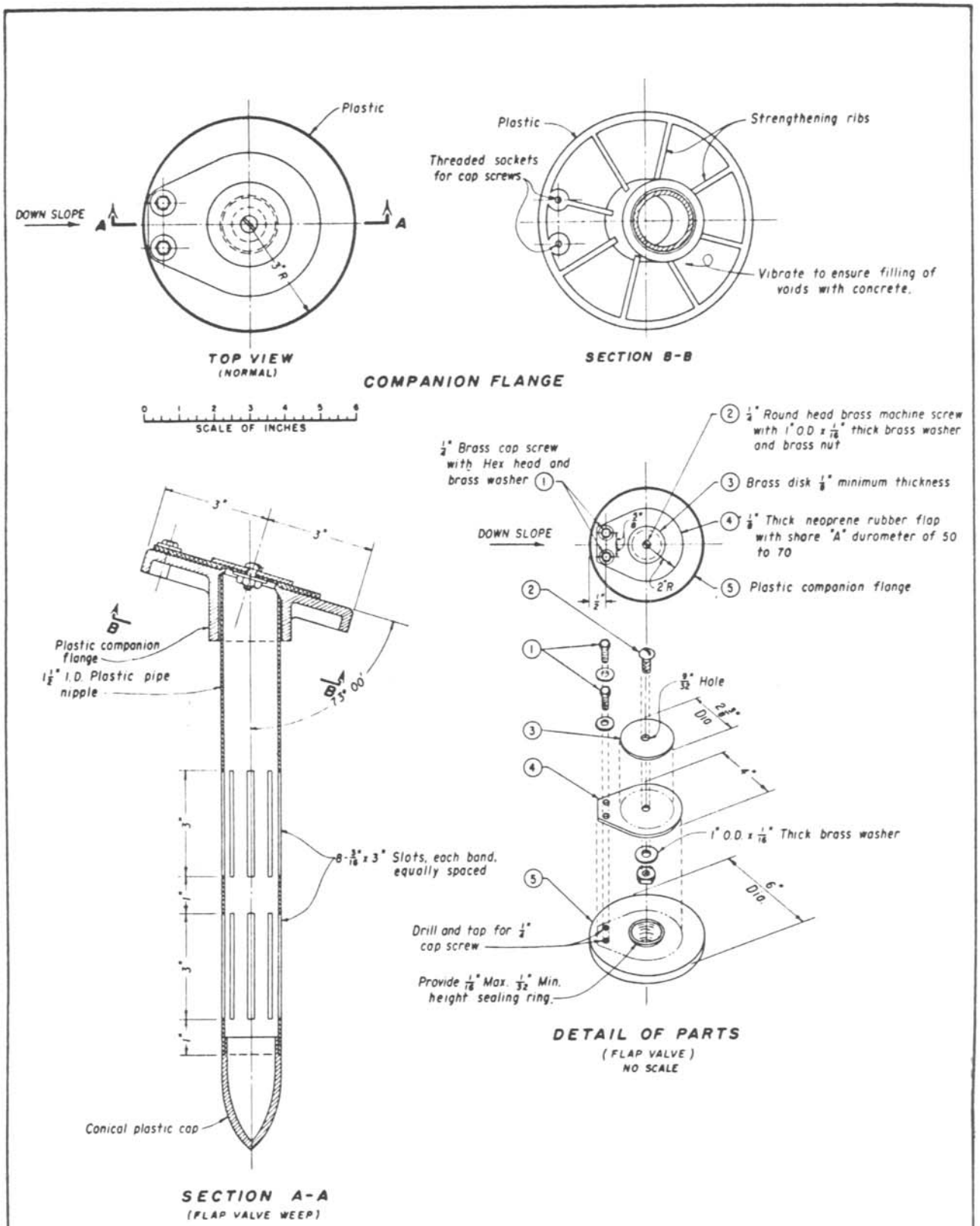
Plastic
DOWN SLOPE
A
A
3"R
TOP VIEW
(NORMAL)
Plastic
Threaded sockets for cap screws
Strengthening ribs
Vibrate to ensure filling of voids with concrete.
SECTION B-B
COMPANION FLANGE
0 1 2 3 4 5 6
SCALE OF INCHES
3"
3"
Plastic companion flange
1½" I.D. Plastic pipe nipple
73° 00'
8-3/16" x 3" Slots, each band, equally spaced
Conical plastic cap
SECTION A-A
(FLAP VALVE WEEP)
¼" Brass cap screw with Hex head and brass washer ①
② ¼" Round head brass machine screw with 1" O.D. x 1/16" thick brass washer and brass nut
③ Brass disk ⅛" minimum thickness
④ ⅛" Thick neoprene rubber flap with shore "A" durometer of 50 to 70
⑤ Plastic companion flange
DOWN SLOPE
2"R
9/32" Hole
1" O.D. x 1/16" Thick brass washer
6" Dia.
Drill and tap for ¼" cap screw
Provide 1/16" Max. 1/32" Min. height sealing ring.
DETAIL OF PARTS
(FLAP VALVE)
NO SCALE

Figure 2

Invariably a crack will form between old and new concrete. In removal of the old concrete it is advisable to cut it in straight lines, thus facilitating the forming of the joint as illustrated in Figure 3 below. This type of joint also is suggested for other places where it is known that contraction will occur and crack control is needed.

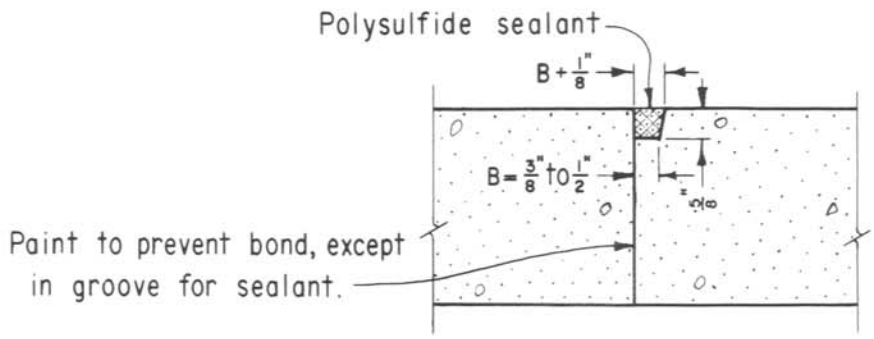

CONTRACTION JOINT
FIGURE 3

It is usually good practice to remove the damaged section and replace it with a new panel when linings heave from expansion due to temperature change. In such cases an expansion joint should be included in the repair so that there will not be a recurrence of the failure. The type of joint shown in Figure 4 below, can be used to maintain a watertight lining.

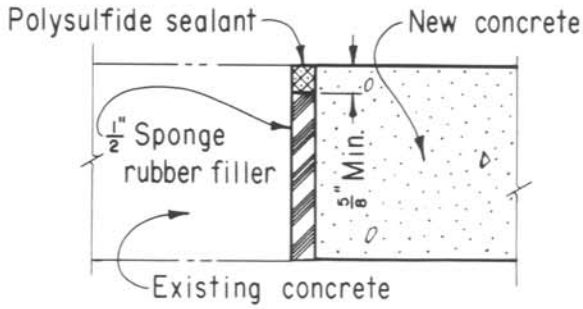

EXPANSION JOINT
FIGURE 4

Most joints and grooves in concrete linings will be of the weakened plane type, as discussed previously and filled with an elastic filler or sealant. Figure 5 below, illustrates a typical groove. It has been found that the groove must be at least one-third the depth of the lining if adequate weakness is to be attained and random cracking avoided. Also, sealer depth of 5/8 inch is considered a minimum. Groove width must be large enough that extension or compression of the sealer will not exceed about 25 percent, otherwise the sealer may fail. A suggested table of dimensions for groove, width, depth, and spacing is given in Figure 6 below.

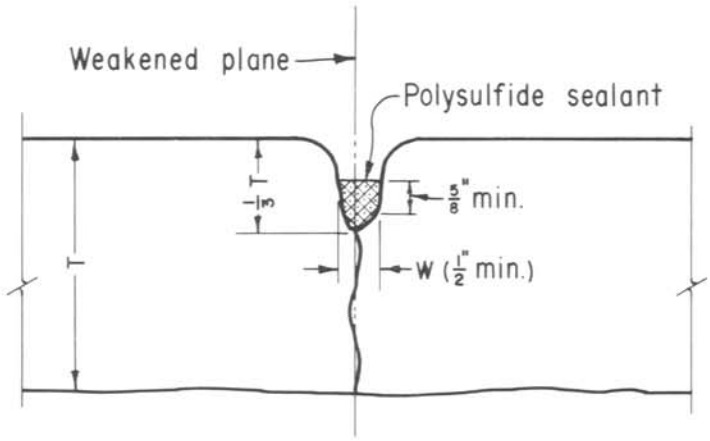

WEAKENED PLANE JOINT
FIGURE 5

GROOVE DIMENSIONS

T SLAB THICKNESS (INCHES)	B GROOVE WIDTH (INCHES)	C GROOVE DEPTH (INCHES)	APPROXIMATE GROOVE SPACING ON CENTERS (FEET)
2	$\frac{3}{8}$ to $\frac{1}{2}$	$\frac{5}{8}$ to $\frac{3}{4}$	10
$2\frac{1}{2}$	$\frac{3}{8}$ to $\frac{1}{2}$	$\frac{3}{4}$ to $\frac{7}{8}$	10
3	$\frac{3}{8}$ to $\frac{1}{2}$	1 to $1\frac{1}{8}$	12 to 15
$3\frac{1}{2}$	$\frac{3}{8}$ to $\frac{1}{2}$	$1\frac{1}{8}$ to $1\frac{1}{4}$	12 to 15
4	$\frac{3}{8}$ to $\frac{1}{2}$	$1\frac{1}{4}$ to $1\frac{3}{8}$	12 to 15

FIGURE 6

Random cracking also may occur in concrete canal linings. Figure 7 below, shows a random crack and how a sealer can be applied. Note that the sealer over the crack must be not less than 3/8 inch thick. This thickness is very important and must be attained if the repair is to be successful. The drawing indicates sandblast cleaning which is the best and most economical method of securing a clean and suitable bonding surface.

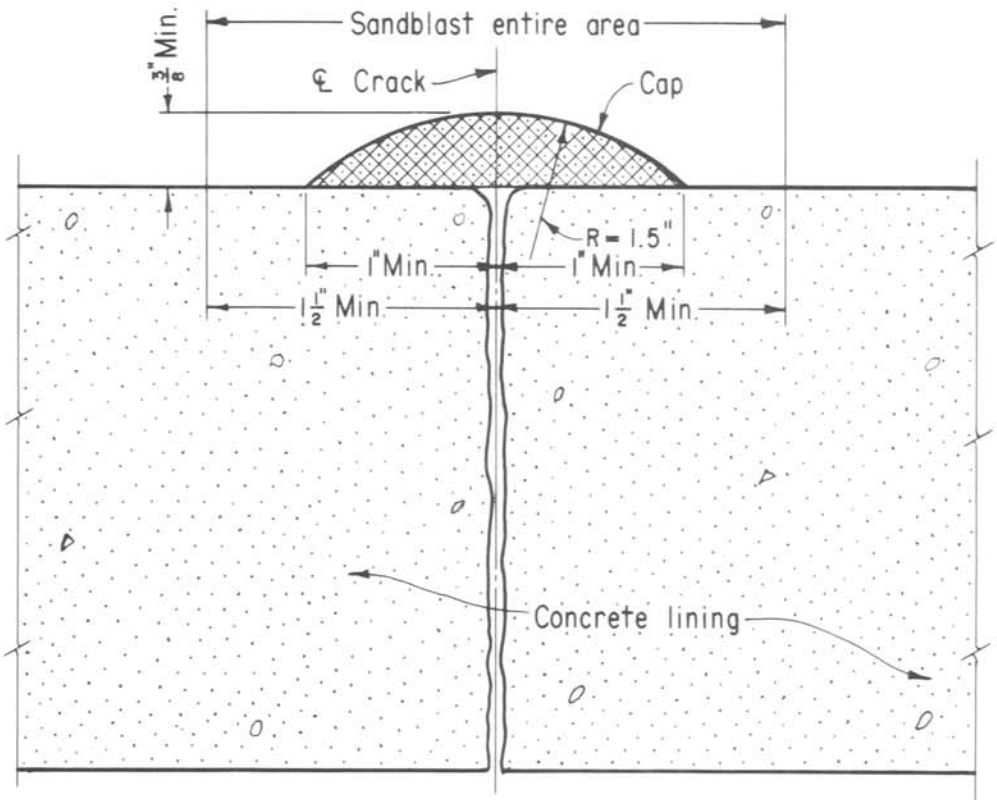

SECTION THRU RANDOM CRACK
FIGURE 7

Polysulfide

A coal-tar modified polysulfide (two component) sealer has superior weathering resistance. Adhesion to clean dry concrete is excellent, but not to wet or damp concrete. Specifications require it to resist extrusion through a 1/8-inch crack under 60 foot of head for 7 days; therefore, backup material is not needed except in wider cracks. It can be used for sealing both random cracks and contraction grooves.

It has been found from experience that it is mandatory that surfaces be dry at the time of application, and that the air and concrete temperatures be not less than 50° F.

Economy dictates that a relatively shallow section of sealer be used consistent with hydrostatic pressure but in any case not less than 3/8 inch for cracks and 1/2 inch for joints. If installed properly polysulfide sealers should last longer and provide a better seal than rubberized asphalt mastic. Polysulfide canal sealants are available in two types. There is a quick-set material which must be machine applied using a costly mixer-applicator requiring experienced personnel and a slow-set type which can be mixed and applied by hand. The former is more economical on large jobs and the latter is more adaptable to smaller ones.

Preformed Reinforced Mastic Tape

Glass cloth reinforced asphalt mastic tape has proved to be satisfactory for use as a sealer for random cracks. This material is a glass cloth reinforced rubberized asphalt mastic in tape form and has been under test in several locations. Figure 8 below shows a glass cloth reinforced heavy bodied asphalt mastic furnished in tape form.

The tape must be applied carefully, both tape and concrete must be warm and dry, also the tape must be well rolled to assure proper contact of the mastic to the concrete and to feather the edges of the tape. The concrete surface must be clean before the tape is applied; sandblasting is not always required but it is the preferred method of cleaning. Thickness and width of the tape should be determined by whatever is deemed desirable. On the Ainsworth Canal a 3-inch-wide by 3/16-inch-thick tape gave the best results. This reinforced mastic tape comes in various thicknesses, widths and lengths and it can be purchased commercially.

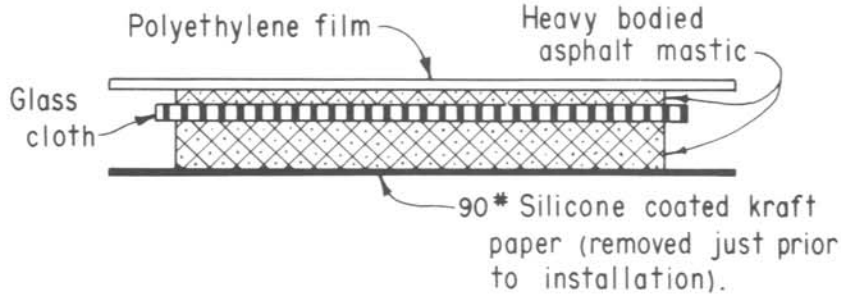

SECTION THRU GLASS CLOTH REINFORCED ASPHALT MASTIC TAPE
FIGURE 8

Other Sealing Compounds

Asphalt mastic sealers have been used by the Bureau for many years for sealing joints and cracks in concrete canal linings. The one in use for the past 10 years is low in cost, can be applied as received, is more elastic than previous asphalt mastics, is most durable where continuously submerged or otherwise protected from direct weathering, and has been found to provide a satisfactory seal for about 5 years, depending on service conditions. Experience has shown that it will adhere satisfactorily under less than ideal conditions, i.e. damp concrete, less thorough surface preparation, or application over other deteriorated asphalt sealers. It is however, less weather resistant than polysulfide sealers and, being essentially plastic in nature, it may be extruded through cracks as narrow as 1/16 inch under hydrostatic pressures greater than 6 feet of water.

Where the sealer is to be used in contraction joints under high pressures a backup material such as butyl sponge rod should be installed at the bottom of the groove, leaving a channel above the backup at least 3/4 inch deep to receive the mastic. It is not recommended for sealing cracks under high heads. Under low heads it is vital that the mastic bead be applied over the crack to a depth of at least 3/8 inch to prolong its life. It should be pointed out that this mastic is more satisfactory for sealing contraction joints than for sealing random cracks because cracks tend to reflect through. Glass cloth reinforcement, such as is used in the tape described above, would probably significantly improve the crack sealing ability of this mastic.

The three sealing materials mentioned above can be obtained from many contractor supply houses. However, if specifications or further information is desired, please write to: Department of the Interior, Bureau of Reclamation, Office of Chief Engineer, Attention: Code 400, Denver Federal Center, Denver, Colorado 80225.

* * * * *

The question for each man to settle is not what he would do if he had means, time, influence, and educational advantages, but what he will do with the things he has.

JACK-CART FOR DUAL-WHEEL
TRUCK SERVICING

(Reprinted by permission of PLOWBACK, January 1970 issue. This is a publication of the National Park Service, National Conference of State Parks, Washington, D.C.)

This unique and servicable shop tool can help prevent injury likely to occur in the physical strain necessary to remove heavy dual truck wheels. It can be constructed from scrap metal, a small hydraulic jack, and a set of four rollers for only about $50, but it is said to save 50 percent of the time usually required to remove the heavy truck wheels for inspection or repair, and is a much safer method. Mr. Clyde W. McDaniel, Maintenanceman, of the Natchez Trace Parkway National Park Service is the designer.

To operate this device, the rear axle is raised slightly with a conventional type jack, and the jack-cart is rolled under the wheels which are to be removed. Photograph 1 below, shows how easily the job is accomplished.

Photograph 1. Photo PX-D-67500

To relieve the pressure of the wheels on the axle the hydraulic jack that is built into the jack-cart is so used, thus making the wheels easier to remove. This hydraulic jack is shown being operated by the mechanic in Photograph 2 below.

Photograph 2. Photo PX-D-67501

The jack-cart can be rolled back, completely out of the way of the mechanic as shown in Photograph 3 below, until the wheels are ready to be replaced.

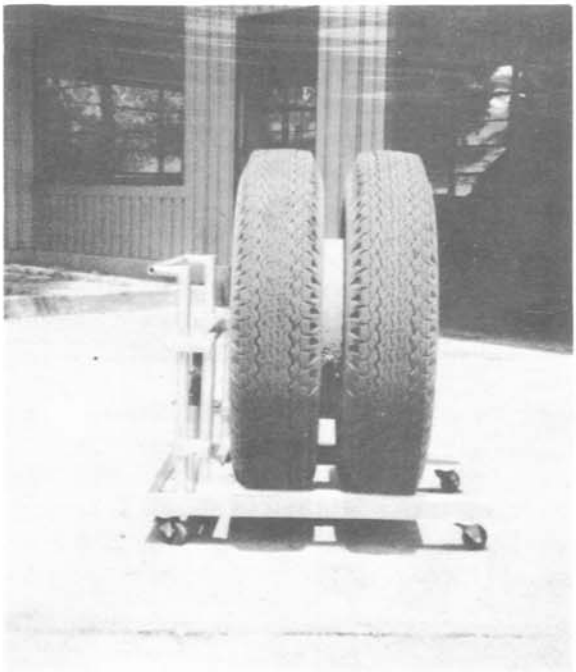

Photograph 3. PX-D-67502

* * * * *

PORTABLE POWER CORDS FOR USE IN MAINTENANCE AND EMERGENCIES

In irrigation maintenance work and during emergencies rubber- and plastic-covered power cords are often used in conjunction with portable powerplants to run tools and supply lighting. Experience has shown that the selection of the correct size cable is especially important if portable power tools are to perform efficiently without overheating, or stalling and shortening tool life. For quick reference the tables listed below are suggested guides when selecting the size cable needed for small tools and also for lighting.

Rubber-covered stranded cord with ground wire Type "S" for heavy service is recommended where it may be subject to oil and abrasion. Because of its flexibility and ease of handling, rubber-covered cable is often used. Type S, 0 to 600 volts for heavy duty is recommended.

Motor Table			
Single-phase (1ø) motors		Recommended cable size	
Approximate full-load current amperes		Cable size @ 115 volts 1/	
HP - AC motors	Amps @ 115 volts	100 ft cable	200 ft cable
1/4	5.8	14 GA 2/	14 GA
1/3	7.2	14 GA	12 GA
1/2	9.8	14 GA	10 GA
3/4	13.8	12 GA	10 GA
1	16	12 GA	8 GA
1-1/2	20	10 GA	8 GA
2	24	10 GA	6 GA

NOTE: Momentary starting currents are higher than the above values. Locked-rotor currents run between five and eight times the full-load currents of motors.

1/ This table allows 5 percent voltage drop. Increasing conductor length increases the voltage drop. The voltage drop is subtracted from the source voltage and the difference is the voltage available at the load. Generally a 5 percent voltage drop can be tolerated in handtool use.
2/ It is recommended that no cord smaller than 14 GA be used.

Table 1

Lamp or Heater Table			
Load		Recommended cable size @ 115 volts	
Watts	Amps	100 ft cable	200 ft cable
500	4.4	14 GA	14 GA
750	6.5	14 GA	12 GA
1,000	8.7	14 GA	12 GA
2,000	17.4	12 GA	8 GA
3,000	26	10 GA	6 GA
4,000	35	8 GA	6 GA
5,000	44	8 GA	4 GA

Table 2

When a combination of motors and lamps are used on one circuit add the total amperage of the motors plus lamps to determine the cable size to use from Table 3 below:

Cable Size for Various Currents 115 Volts With 5 Percent Voltage Drop				
Amps	100 ft GA	200 ft GA	300 ft GA	500 ft GA
5	14	14	12	10
6	14	12	12	10
7	14	12	10	8
8	14	12	10	8
9	14	10	10	8
10	14	10	8	6
12	12	10	8	6
15	12	8	8	6
20	10	8	6	4
25	10	6	6	4
30	10	6	4	2
35	8	4	4	2
40	8	4	4	2
45	6	4	2	1
50	6	4	2	1

NOTE: It is suggested that for higher loads more than one cable be used. All lines should be fused.

Table 3

* * * * *

SANDBLAST GUN MODIFICATION
(Suggestion R5RG-70S-3)

For several years now the Rio Grande Project with headquarters in El Paso, Texas, has used a fabricated sandblast gun developed by the Bureau which does the job intended very well.1/ However, there has been the problem of fast deterioration of pipe wyes, nozzles, and bushings because of the abrasive action within the gun from the sand and air. Frequent replacement of these fittings was a constant problem.

An idea presented by Patricio V. Padilla, of the Power Field Branch, of the Rio Grande Project, for improving the capability of the gun, has proven to be very successful. He developed a tool to aline the 1/8-inch pipe so there is a direct feed of sand and air into the barrel of the nozzle. This has decreased the abrasive action substantially. The cost of replacing pipe and fittings has been reduced approximately 75 percent.

At times when using this gun the 1/8-inch pipe, shown in the drawing on the following page, is out of line and when this happens the abrasive action on the pipe wye, bushing and nozzle begin and the parts are soon worn out. As shown in the drawing, a 1-1/2- x 3/4-inch pipe bushing threaded into the opposite end of a 3/4-inch to 3/8-inch bushing will permit the threading of a 3/8-inch piece of pipe so it will extend out approximately 1-1/8 inch. It is necessary to ream the 3/8-inch pipe so it will receive the 1/8-inch inside the gun. The device must be removed after the alinement is completed.

If further information is desired regarding this suggestion, please write to the Project Superintendent, Bureau of Reclamation, Rio Grande Project, El Paso, Texas 79901.

1/ See Operation and Maintenance Equipment and Procedures Release No. 2, dated January-February 1953, or write to: Office of Chief Engineer, Bureau of Reclamation, Denver Federal Center, Building 67, Attention: Code 400, Denver, Colorado 80225.

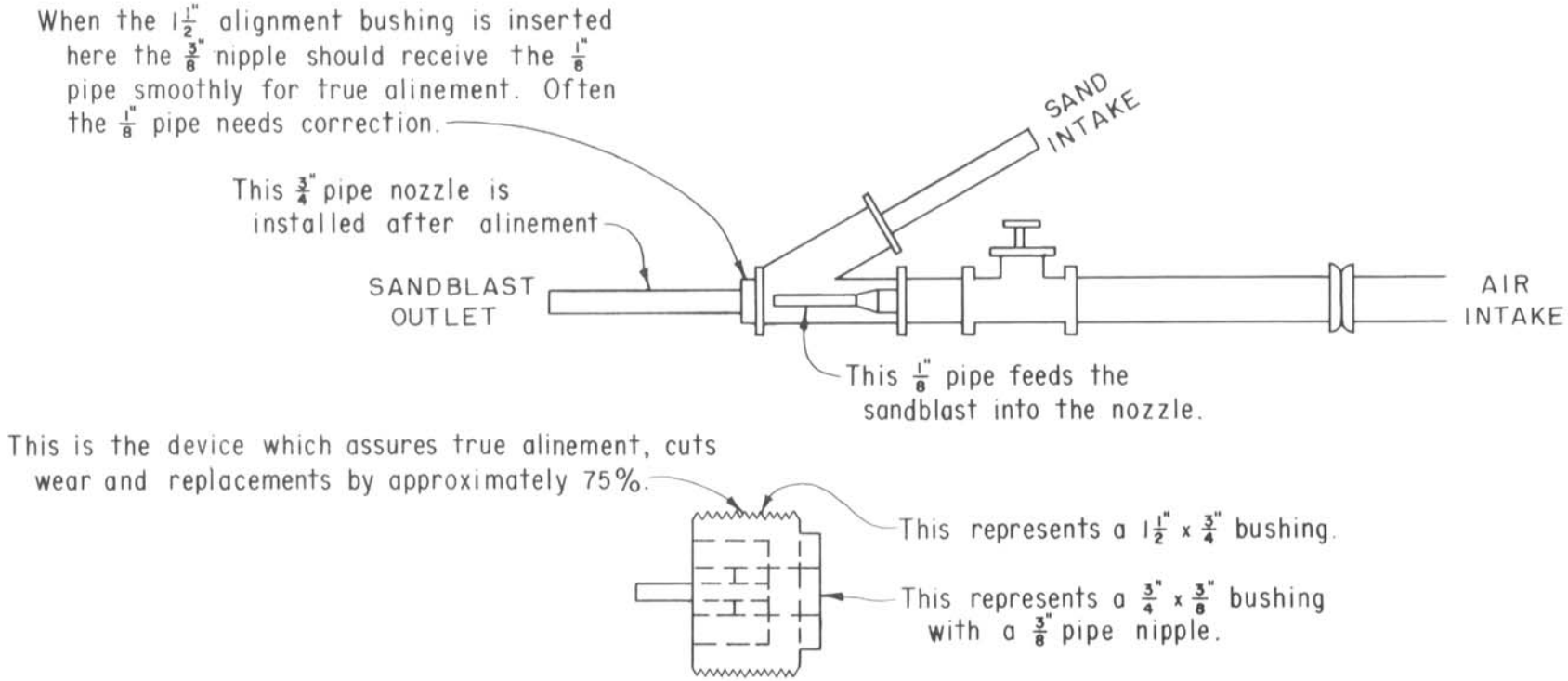

SANDBLAST GUN MODIFICATION

ALL PURPOSE MAINTENANCE VEHICLE 1/

Efficiency in maintenance of the Exeter Irrigation District has been increased by the use of an unusual vehicle designed by and constructed under the supervision of their district superintendent, Mr. Harvey Sandidge. Many time consuming trips from problem areas to the shop for equipment or tools necessary to solve a maintenance problem are now eliminated by use of this vehicle.

Equipment mounted on the trailer includes arc and acetylene welders, air compressor, water pump, tool cabinet, pipe vise, standard vise and lubricating equipment. Five steel boxes are also mounted on the trailer that contain tools, welding accessories, meter and gate valve parts and parts essential for pipeline repairs.

Photograph 1 below shows the tool boxes mounted at rear of the trailer. Air compressor and water pump can be seen just behind the cab. Twenty gallons of gasoline are available for other district equipment, if required. The vehicle is also equipped with a two-way radio.

Photograph 1. Photo PX-D-67503

1/ Article submitted by Mr. Floyd Brown, of the Exeter Irrigation District, Exeter, California.

A full view of the maintenance vehicle is shown in Photograph 2 below. Note the gasoline cans at rear of the trailer. Also note the arc and acetylene welding equipment are mounted just behind the cab for stability.

Photograph 2. Photo PX-D-67504

The service unit is powered by a 1963-1/2 ton pick-up truck. Considerable skill and adaptation was required to combine the trailer and pick-up into a semi-truck. All labor was done by district employees. Parts to build this unique unit totaled $704.

If further information is desired regarding this vehicle you may write to the Exeter Irrigation District, P. O. Box 546, Exeter, California 93221.

* * * * *

The great inventors have been the great surprisers. Again and again they have shamed our limited outlook. They have done the things we have said could not be done. They have been experts in the impossible.

BATTERIES FOR REMOTE VHF RADIO REPEATERS

Under very cold weather conditions the selection of the correct type of battery is essential for VHF radio repeaters that are equipped with engine-cranking batteries to start standby power units.

At about -30° Fahrenheit the water in the electrolite of a lead acid battery starts to freeze. Ice crystals start forming and the cranking power becomes nil. On the other hand nickel-cadmium batteries under these same temperature conditions retain some of their voltage and output capacity so that cranking is not impaired. Voltage at low temperatures is more important than ampere-hours. A bank of lead acid station batteries is shown in Photograph 1 below, and in Photograph 2 on the next page, shows a typical nickel-cadmium battery.

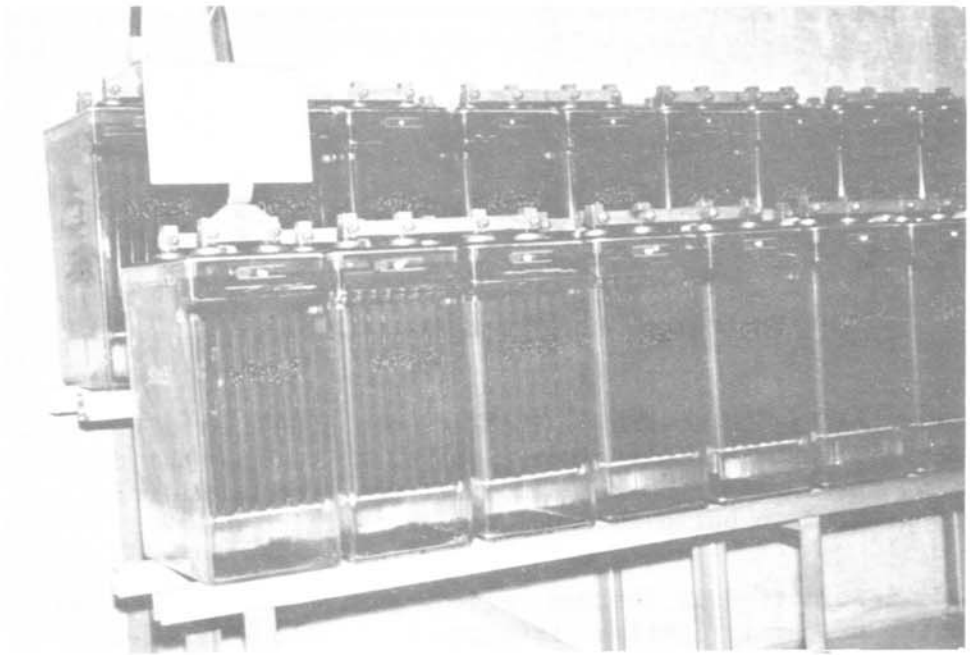

Photograph 1. Photo PX-D-67505

Nickel-cadmium batteries are particularly suited for communications systems and other applications requiring many hours of discharge, at a constant current. However, selection of a battery will depend to a large extent on how the repeater station is made up and also the temperatures to be encountered. The best solution to the battery problem of course, is a warm building.

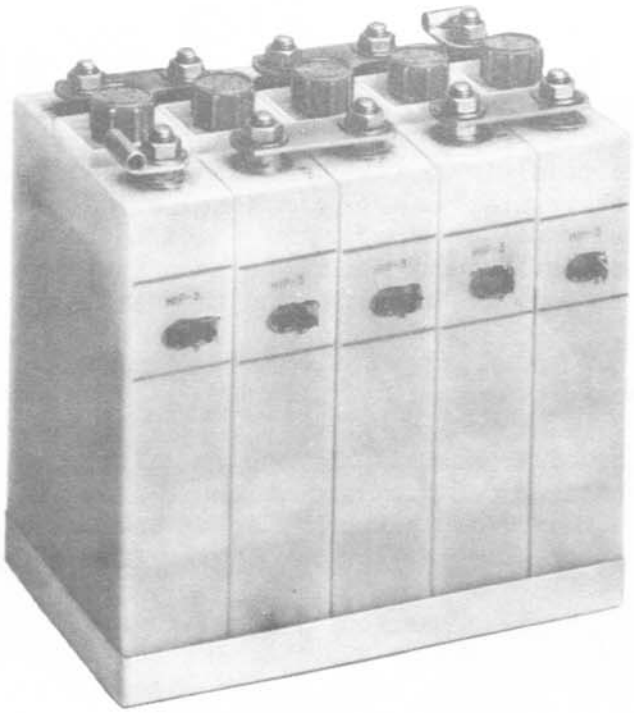

Photograph 2. Photo PX-D-67506

The initial cost of a nickel-cadmium battery and charger is approximately the same as that of a lead acid battery and charger because the lead acid battery must be considerably larger in capacity. It should be noted however, when selecting a nickel-cadmium battery that even though the maintenance is nil it is difficult to determine the state of charge; since the amount of charge in the battery is a function of the voltage and a hydrometer is not used.

Careful consideration should be given to the proper selection of the batteries to be used in remote area stations. If the starting battery fails the station will be off the air.

* * * * *

Emerson was profoundly right when he said that nothing great is ever accomplished without enthusiasm. If a task is done halfheartedly, unenthusiastically, it bears the sure stamp of mediocrity. Enthusiasm is a quality that grows with progress.

WINTERIZING OF IRRIGATION PUMPS 1/

Introduction

The Bureau of Reclamation has installed a great many irrigation pumps of all sizes in various locations, which operate over a large range of climatic conditions. The question of winterizing these pumps arises quite regularly. For instance, on many of our projects it is customary to permit vertical pumps to remain in the water in normal operating position throughout the winter months, and on others the pumps are removed from the water every year before freeze-in.

Vertical Wet Sump Pumping Units

A wet sump pumping plant normally is one in which vertical-shaft pumping units are suspended from a deck and the pumping element is submerged in a sump. The sumps may be of the propeller (axial flow), mixed-flow, or vertical-turbine (radial flow) type.

Several installations have horizontal centrifugal, double-suction, split-case pumps which are of the bottom-suction type, which also may be classified as wet sump pumps. These are protected the same as discussed later under Horizontal Centrifugal Pumping Units.

The need for special steps, procedures, and precautions necessary to avoid or prevent damage to pumps due to freezing action when allowed to remain in wet sumps has been considered by operation and maintenance personnel on our colder northern projects for many years. On numerous projects considerable effort is expended to assure that no damage will occur. However, on a greater number of projects only very minor preventive measures are taken.

In order to determine what procedures or precautions, if any, are necessary or required to avoid freezing damage to this type of pump, a questionnaire was prepared and distributed to our northern regional offices. The information obtained from the returned questionnaires was tabulated and studied.2/

We learned from the information provided that damage to pumps from ice in the pump sumps has occurred in a few instances, but this

---

1/ Written especially for this publication by Mr. Wesley W. Beck, Supervisory Mechanical Engineer, Division of Design, Office of Chief Engineer, Denver, Colorado.
2/ Winterizing of Wet Sump Pumping Plants, a memorandum report by Mr. J. F. Buchheim, Engineer, Division of Irrigation Operations, Office of Chief Engineer, Denver, Colorado, dated February 19, 1965.

damage has been limited in nearly all cases to the breaking of the oil line to the lower bearing. The repair of this line is usually a relatively simple matter, and it is generally felt that a saving has resulted from permitting the pumps to remain in place during the winter.

For the guidance of our operators and maintenance personnel, the following suggestions are offered relative to the treatment of pumps allowed to remain in place in wet sumps during prolonged cold weather below freezing conditions:

1. Pumps are not specifically designed to withstand stresses which might result from being permitted to freeze-in so it must be realized that there is a calculated risk involved. Damage suffered by the machine as a result of freezing-in cannot be attributed to any deficiency in design.

2. If pumps are allowed to freeze-in, a careful inspection of the lubrication line to the lower bearings of vertical units should be made prior to operation.

3. Consideration should be given to any protective measures which might prevent the formation of heavy ice in the sump or which might minimize damage to the pump in case of freeze-in.

Remember that even a drained sump in a drained canal or pipe line may accidently flood from unexpected causes. Consequently, they should be inspected occasionally during freezing weather.

Horizontal Centrifugal Pumping Units

Horizontal centrifugal, double-suction, split-case pumps have internal cavities that may become filled with water during operation; these may not drain upon shutdown at the end of the irrigation season. The two main cavities are the cored cavities in the suction volute and the interior of the double-suction impeller.

The cored suction volute cavities are normally filled with concrete or grout during shop assembly in the manufacturer's plant or at the time of installation at the site. Sometimes the manufacturer will provide drain holes to these cavities, but during operation the drain holes may become plugged with debris and fail to permit the cavity to drain. When the pump has been opened for routine inspection and maintenance at the end of the irrigation season these cavities, if present, should be checked to see if they have been filled or are draining properly. If the drains were provided a check to see if they could become plugged and, if so, they should be filled as noted above to prevent possible freezing damage.

The central hub of a double-suction impeller is generally cored out, especially in large impellers, to avoid a heavy cross-section that might lead to porous or imperfect castings. On occasion water can enter this cavity by following along the shaft, filling the cored area, and not being able to drain back. If this cored cavity is filled with water and freezing takes place, a frost-boil at the weakest point of the central hub will usually result. This action could damage the impeller beyond repair.

Recent U.S. Bureau of Reclamation specifications require that these openings be filled or provided with suitable drains at the factory. If drains are provided they are normally 120° apart, but here again they may become plugged with debris and fail to adequately drain the cavity.

On older pumps it may be rather difficult to tell if a problem exists. If the pump has been installed for several years and been exposed to below freezing temperatures and no trouble has developed, you probably have no problem. Two customary ways of inspecting this cavity are during routine maintenance to remove the impeller from the shaft or drill a small hole into the cavity which can also be used to fill the cavity, if necessary, and then plugged and ground smooth to contour.

It is suggested that if in doubt, the impeller cored cavity be filled with a plastic foam, a mixture of beeswax and sawdust, or any suitable light weight material that will absorb the expansion of the water when frozen.

* * * * *