Department of the Interior, Bureau of Reclamation

IRRIGATION OPERATION AND MAINTENANCE

BULLETIN NO. 57

July, August, September 1966

LAST COPY - DO NOT REMOVE

In This Issue:

Adaptation of Aircraft Wheels to Industrial Tractor
Photographing Sewers Doesn't Cost a Cent
Typical Memorandum of Policies and Practices Concerning Employment
New Type "Ditcher"
Tough Compact Front Loader
How to Keep a Safety Program Alive
Weight Limit Signs
Oil Additive Sticks to Its Job
Don't Be a Litter Bug
Arizona Boating and Water Sports Laws

The Irrigation Operation and Maintenance bulletin is published quarterly, for the benefit of irrigation project people. Its principal purpose is to serve as a medium of exchanging operation and maintenance information. It is hoped that the reports herein concerning labor-saving devices and less costly equipment and procedures, developed by resourceful project people, will result in improved efficiency and reduced costs on the systems of those operators adapting these ideas to their needs.

To assure proper recognition of those individuals whose suggestions are published in the bulletins, the suggestion number as well as the person's name is given. All Bureau offices are reminded to notify their Suggestions Award Committee when a suggestion is adopted.

* * * * *

Division of Irrigation Operations
Office of Chief Engineer
Denver, Colorado

Rubber-tired industrial tractor modified with protective cab and using 22-32-ply aircraft tires and converted rims.

IRRIGATION OPERATION AND MAINTENANCE
Bulletin No. 57

July, August, September 1966

INTRODUCTION

This issue of the Bulletin contains several suggestions for adaptation of equipment to your possible needs and two pieces of equipment that appear to have use on an irrigation project. One concerns the use of aircraft wheels on an industrial tractor to avoid numerous flat tires that were being encountered in the cutting of brush on the Middle Rio Grande Project. Another concerns the photographing of the interior of pipelines to simplify the location of stoppages and the breakage of pipelines. These are the first two articles in this issue of the Bulletin. A new type ditching machine is described, beginning on page 12, and on pages 16 and 17 there is shown and described a new four-wheel-drive, front-end loader capable of turning in its own tracks, strong enough to handle 1,000 pounds, and able to run for an hour on a gallon of gasoline.

Beginning on page 7 is a typical memorandum of policies and practices concerning employment suggested for study and possible use by irrigation organizations. In the competitive field of employment and human relations of today, irrigation districts must formalize their employment policies and practices. One easy way is to set down in a memorandum those items which affect the everyday lives of employees of a district. Such a memorandum can also serve as a tool of good management to keep officials aware of constantly changing regulations. It is good practice to have the Board of Directors adopt a memorandum of employment at the start of each year and have it recorded in the official minutes as part of the business of the district.

Beginning on page 21 is an article concerning oils that form a tough film upon the addition of a new agent to industrial oils. This article, reproduced from Iron Age, reports a reduction in wear of up to 24.2 percent has been proved by adding the new wear-reducing agent to the industrial oils.

Two articles on safety are included in this issue of the Bulletin, beginning on pages 17 and 19. The first, "How to Keep a Safety Program Alive," points out that most safety programs are sound; it is in the follow-through that they fall down. The second describes and presents a drawing of weight limit signs now being required on all Bureau of Reclamation bridges.

The final articles in this issue of the Bulletin concern steps taken by the Salt River Project to control littering about their project facilities.

ADAPTATION OF AIRCRAFT WHEELS TO INDUSTRIAL TRACTOR
(Suggestion R5MRG-65S-4)

Roy B. Wooldridge and Claude S. Ramzel of the Middle Rio Grande Project suggested that all wheel-type tractors used in pulling rotary mowers for control of phreatophyte regrowth in the Rio Grande floodway be fitted with 32- to 38-ply aircraft tires to avoid the numerous flats on standard tractor tires encountered by the contractor who originally cleared this land.

Experience gained during the initial cutting of the area by contract indicated that a considerable portion of equipment maintenance costs was for repairs to the tractor tires. The brush once cut leaves a 4- to 6-inch sharp pointed stub which easily punctures standard tractor tires. During the contract the minimum tire repair bill was $160 for a single month plus the additional cost caused by the tractor downtime.

Photograph No. 1

The 32- to 38-ply aircraft tires were used on a trial basis during the first 6 months maintenance period. Their use eliminated all flats during this period, and accordingly the tires are now considered standard equipment. The photograph on the cover of this issue of the bulletin is a view of a rubber-tired industrial tractor modified with protective cab and using 22- to 32-ply aircraft tires and converted rims.

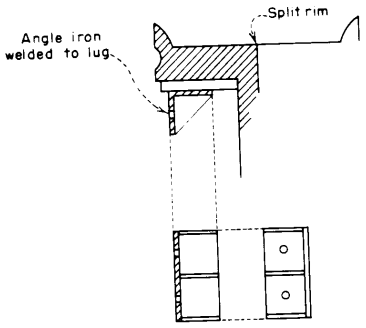

4" X 4" X 8 1/4" – 1/4" ANGLE IRON

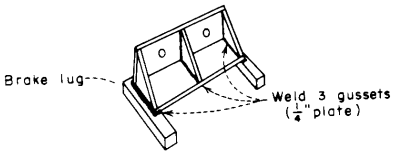

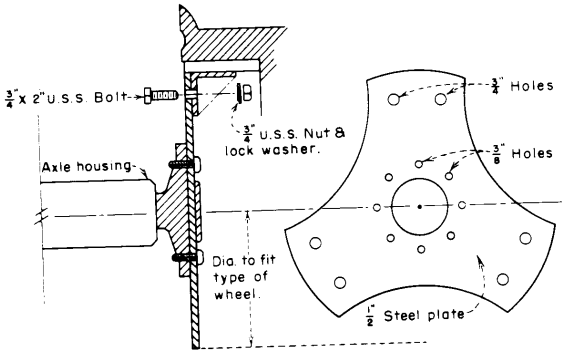

WHEEL ADAPTER
(BOLTS TO AXLE WITH STANDARD TRACTOR LUGS)

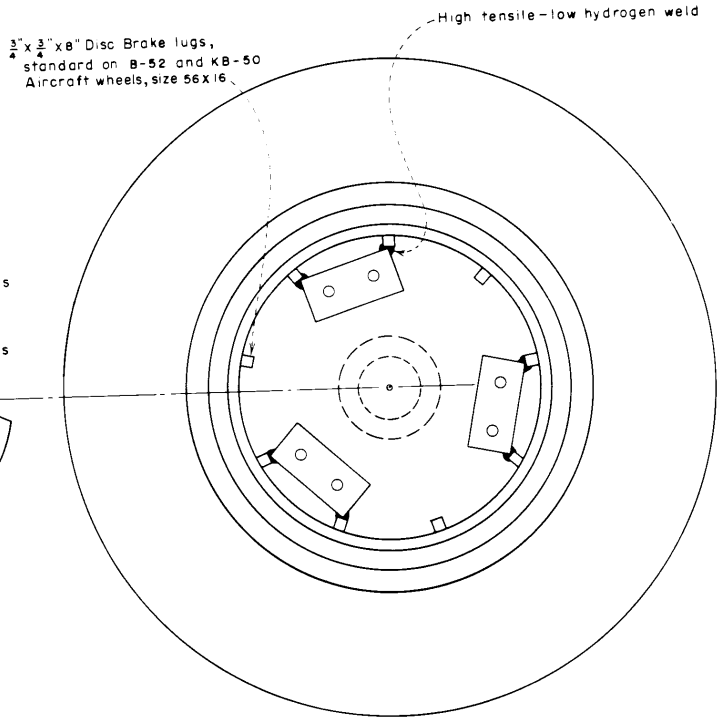

B-52 OR KB-50 AIRCRAFT WHEEL
AND 56 X 16, 32-38 PLY TIRE

ADAPTATION OF AIRCRAFT WHEELS
TO INDUSTRIAL TRACTOR

Military surplus aircraft tires and wheels are available and the wheels can be adapted to fit wheel-type tractors at a cost of about $5 per wheel. Photograph No. 1 on page 1 is a close-up view of the adapted tire and wheel. Photograph No. 2 is a view of the tractor with a 15-foot 3-gang rotary mower attached. Figure 1 on page 2 illustrates method of adaptation.

Photograph No. 2

* * * * *

PHOTOGRAPHING SEWERS DOESN'T COST A CENT

by

B. F. Murphy1/

. . . Because it shows how to avoid spending thousands of dollars for needless reconstruction.

Before replacing an old sewer line, check it from inside the pipe to determine its exact condition. When this was done in Westfield, New Jersey, it was found that only 94 feet of pipe needed replacing instead of the entire 300-foot stretch between manholes. At a conservative estimate of $10 per foot for replacement, sewer photography did not cost one cent; in fact, the net saving after paying the bill for the investigation totalled about $2,000.

1/Mr. Murphy is Street and Sewer Superintendent of Westfield, New Jersey. The article is reprinted from The American City, March 1965, by permission of the Editor.

This particular 8-inch sewer line became troublesome a few years ago. Stoppages occurred and the sewer rods labored under increasing difficulty to break through. It had been decided to dig up and replace the entire section between manholes, a difficult and expensive task because of the need to bypass the flow, hurdle the water and gas services and replace the street surfacing, until the merits of inspecting the line from the inside were made known by an equipment company of Newark, New Jersey.

Photography techniques vary. Some employ a television camera to furnish a continuous record of the sewer as the pick-up unit moves forward. Others use equipment that furnishes prints either in color or black and white every few feet. But Westfield, N. J. chose a new technique that literally transports the viewer into the sewer, three-dimensional shots snapped by a twin-lens, flash-equipped camera, shown in Photograph No. 1. The result is a 3-D record of the sewer

Photograph No. 1

line. It provides the same breathtaking effect that your grandparents obtained with their stereoscope on long winter evenings. Only twin-lens cameras can furnish this depth of vision to identify even familiar objects that often puzzle viewers when seen in only two dimensions.

The photographs of this line clearly showed the locations of leaking joints, tree roots, cracked pipe, and grade discrepancies. They also showed how the sediment and roots had traveled downstream to indicate falsely that the entire line was defective, whereas the pipe and joints in this area were perfectly sound. About $100 was spent to save $2,000, and that makes a lot of sense in anyone's budget.

With such gratifying results on the first application, the equipment was sent next into a 10-inch sewer. This line suffered from the same symptoms as the first one. The skid-mounted camera moved easily to the 279-foot mark, photographing merrily away. Then it refused to budge another inch. Rather than calling the flexible sewer rodder to the scene, the camera was quickly jerked back and transferred to the downstream manhole. It then approached the obstruction from the opposite side. It moved easily 167 feet before stopping against the downstream end of the obstruction. This located the trouble exactly, and a few hours later the photographs showed that the only trouble with this line consisted of a few bad joints where tree roots and sediment enter the sewer. Only these few sections of pipe must be replaced.

Good Technique

Photograph No. 2, page 6, indicates how skids adapt the apparatus to different pipe sizes; the twin lenses must be at the center of the pipe to provide a check on line and grade. Good technique calls for the camera to travel downstream as it snaps away. This provides two advantages. Because it moves with instead of against the stream, flow interruptions are minimal. In addition, the lenses are protected from sprays of water that might otherwise almost inundate them. In going upstream in the above described operation, a few photographs were lost because of this spray, but the 3-D effect, visible from preceding pictures taken at 2-foot intervals, provided an adequate record. Whenever the lens became wet, a coupled heater automatically dried it off in a matter of seconds.

With a particular goal in mind, a camera was also sent upstream in another 8-inch line. This 300-foot length includes 20 feet of cast iron pipe under a little brook. Also scheduled for replacement, this line suffered from intermittent stoppages and our augers had a difficult time negotiating it from one manhole to the other. Surprisingly, the line under the creek turned out to be perfectly sound and on grade. Downstream, however, the pipe wove up and down like a roller coaster. Debris settled in the depressions and stopped the flow at

regular intervals. The photographs told where the ponding began and it is known which sections of pipe to replace.

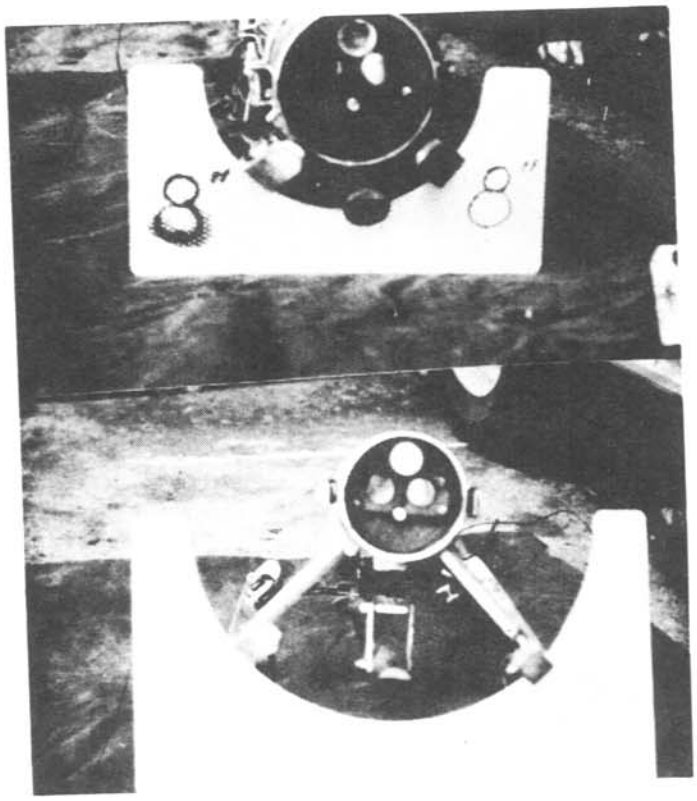

Photograph No. 2

Next followed an investigation of the 36-inch sewer main under a street. This line puzzled and worried the staff. Several sections of the asphaltic-concrete pavement had suddenly given way. The underlying material had just disappeared and continued to settle. Not only costly in terms of patching material and labor, these sudden depressions posed continuing and unexpected hazards to traffic.

The camera crew considered floating the equipment downstream in this 36-inch pipe running half full, but finally decided to attach bigger skids to raise the twin-lens unit out of the flow. It was reasoned that a float could twist and turn enough to reduce the value of some pictures. But on skids, the camera would always be under positive control.

These photographs indicated that several of the connections to this deep sewer had failed. The camera showed plainly which of the claypipe risers had broken away and settled to cause the cavities under the street.

An old city of 31,000 people, Westfield contains 100 miles of sanitary sewers. 70 miles a year are cleaned on a preventive-maintenance schedule. Radios in five cars and trucks help to maintain contact, but it is expected that more of them will be obtained to help get to emergencies faster and deploy both sewer and street equipment more efficiently.

This year's budget contains a relatively big item for sewer photography, but whenever someone questions it, it is explained how these funds have proved that they can save ten to 50 times their value. It almost seems that this item should hop over the line and appear in the credit column instead of taking up that needless debit space.

* * * * *

POLICIES AND PRACTICES CONCERNING EMPLOYMENT

A memorandum was prepared for use in a discussion by Burdell Curtis, E. H. Neal, and John V. Walker1/ at the 15th Annual Irrigation Operator's Conference, in Boise, Idaho, January 18-19, 1966. It was used as an illustration to suggest that each district should establish its own policies and practices concerning employment of its personnel. The points covered are presented herein as they were in the illustrative memorandum. It should not be construed that the figures or statements are correct and applicable to every irrigation district.

Your Irrigation District

Memorandum of Policies and Practices Concerning Employment

The following is a statement of Policies and Practices, approved by the District's Board, concerning particulars of employment.

Work Year

Because of weather and climatic conditions the District's "work year" is from March 1 to the last day of February of the following year. The District's "work year", based on 40-hour week, is 2,080 hours, an average of 173.3 hours monthly.

Annual Leave

Annual leave is earned by permanent employees, only, and the amount of leave which may be earned is governed by the length of time the employee has been employed by the district. The maximum accumulated annual

1/Burdell Curtis, E. H. Neal and John V. Walker are Manager, Burley Irrigation District; Regional Supervisor of Irrigation, Region 1; and Engineer, Division of Irrigation, Region 1, respectively.

leave which may be carried over from one work year to the next, is 160 hours, or 20 days.

Annual Leave Earning Schedule:

First year	5 days
Second through fourth year	10 days each year
Fifth through ninth year	15 days each year
Tenth year, and beyond	20 days each year

Approval of Leave:

Annual leave is to be taken only upon the approval of the management. It is expected that employees earning more than 10 days leave annually will take about 5 days leave during December, January, and February.

Payment for Accrued Leave:

Upon termination of District employment, any unused annual leave up to 20 days or 160 hours will be paid to the employee.

Sick Leave

Sick leave will be earned only by permanent employees.

Sick Leave Earning Schedule:

Six (6) days annually will be earned at the rate of 1/2 day per month.

Accumulative:

There is no limit as to the number of hours an employee may accumulate to his sick leave credit.

Sick leave is intended to be an insurance against loss of pay because of illness, or of accidents, and is therefore not to be used indiscriminately by the employee. Its use must be confirmed and approved by an employee's supervisor. It is not payable upon termination of employment.

Working Hours, Extra Time

Daily working hours are established by the management, in accord with the needs of the project and with due consideration for travel time and any other circumstances affecting a day's work.

Recognizing that there are times of the year when it will be highly advantageous for the District, for its employees to work more than

40 hours weekly, particularly in the spring - and the ditch riders during the irrigation season, the work schedule may be arranged to put in the extra hours deemed necessary. This extra time will, however, be at the regular rate of pay.

Hours of Work

Normal working days are from 7:30 a.m. to 4:30 p.m. (including travel time) with 30 minutes off for lunch. Work in the field, however, will not stop before 4 p.m. On those days when more than 30 minutes' return travel time is required, the work day will be lengthened accordingly and overtime will be paid. On the other hand, if return travel time is less than 30 minutes, the lunch hour will be extended and quitting time adjusted to permit return to project headquarters by 4:30 p.m. Leaving the job in the field before 4 p.m. is bad practice and should occur only under unusual circumstances.

Overtime:

Overtime schedules will not start until 4:30 p.m. and, in general, will be authorized only by the Manager; overtime hours (over the normal eight-hour working day) are shown on the time tickets, thus: one hour extra, 4:30 p.m. to 5:30 p.m.

Pay Period

The District's pay period is monthly, with the wages payable on or before the 5th day of the month immediately following. Those employees who desire paychecks twice monthly, will be issued payroll advances about the 20th of the month and may have up to approximately the amount of their net earnings for the first 15 days of the month.

Earnings Record

The District maintains for each employee a complete and accurate record of hours worked, hours of annual and sick leave earned, wages earned, wages paid and leave used. These records are subject to review during the annual audit of the District's accounts by a Certified Public Accountant.

Payroll Deductions

Payroll deductions include Federal and State withholding taxes, social security, and such others as are authorized by law or by the employee.

Legal Holidays

The eight recognized standard holidays are observed by the District and are considered as days worked unless they fall on Saturday or on

Sunday. These are: New Year's Day, Washington's Birthday, Memorial Day, Fourth of July, Labor Day, Veterans' Day, Thanksgiving Day, and Christmas Day.

Private Vehicle Mileage

Employees using their private vehicles on District business which has been approved by the management are reimbursed monthly for the mileage driven at the rate of 8 cents per mile.

Special Accident Leave

To cover the waiting period between the date of an "on-the-job" accident which causes the employee to quit work, and the date the State Industrial Accident coverage becomes effective as far as wage compensation is concerned, a special 5-day accident leave is allowed in addition to normal sick leave.

Accident Insurance

Under the State Workmen's Compensation Law, the employer is required to carry insurance against "on-the-job" accidents and "occupational disease." The District is accordingly insured under the State Insurance Fund. The District's liability to an employee because of accidents or sickness caused by his occupation, is covered by this state insurance.

This disability compensation is limited to those benefits provided in the Workmen's Compensation Law. Normal sick leave special accident leave, and industrial accident insurance are provided at the expense of the district to protect the employee against possible loss of pay.

Accident Reports

Use Caution and Prevent Accidents. --But be sure to report immediately all accidents which do happen; this is important. An accident report protects both the employee and the District.

Liability Insurance

The comprehensive public liability insurance carried by the district covers all of the district's activities and the employees of the district while engaged in these activities.

When injuries or property damages are the result of the negligence of an employee, both the employer and the employee are liable.

It is not considered necessary that the employee carry special liability insurance to protect himself while engaged in district business when operating district equipment or his own vehicle on a mileage basis.

Hospital Medical Surgical Insurance

A District paid employee benefit program provides health insurance under a Blue Cross plan. Family coverage is optional at employee expense.

Life Insurance

A life insurance coverage for all employees with the Very Good Life and Accident Company is paid by the District as follows:

$1,000 life insurance in case of death.

$1,000 in case of dismemberment.

Family coverage is optional at employee expense.

Social Security

All employees are covered by Social Security. For the employee's retirement, the law provides that the employee shall currently pay 4.2 percent on the first $6,600 of his gross wages, and the District shall pay a like amount into the Social Security Program.

Employment Security

The district participates in the State Employment Security program (Unemployment Compensation) for wages paid up to $3,000 annually.

State Employees' Retirement

The District participates in the State Retirement Program which requires that the employee pay 3 percent of the first $400 of his wages and 6 percent of his gross annual wages over $400. The District contributes 9.1 percent of gross wages paid.

Nepotism and Employment of Members of a Family

It is the policy of the Board of Directors that the Manager shall not employ any member of his own family or any relative of a member of the Board of Directors without the Board's consent as recorded in the minutes of official meetings. It is also the policy of the Board that the Manager shall similarly secure permission to employ more than one member of a family.

District Houses

The rental rate to District employees, on District-owned houses, is $40 per month without regard to location or specifications. The monthly rental is deducted from the employee's pay each month.

Fire Insurance

Employees living in District houses should carry their own fire and other protection on personal property; the District insures only the buildings.

Telephones

Recognizing that it is of primary importance to the District and an advantage to the water users to have access by telephone to certain of the employees of the District, the District pays the regular monthly telephone bills for the following District officers and employees:

Manager and Assistant Manager
Watermasters
Regular Ditch Riders
Foreman

Purchases of Supplies, Repairs, Etc. for the District

Although the district does not adhere strictly to purchase order methods, all purchases must be directly authorized by the management and routed through the purchasing officer. The invoices must be marked to show where the item is to be used and signed by the person getting the material. The invoice copies or tickets must be turned in to the office without delay.

* * * * *

NEW TYPE "DITCHER"

The machine shown in Photograph No. 1 on the following page has been designed to clean ditches, laterals, and canals while a stream of water is running or when ditches are dry. Being able to efficiently clean and dig ditches at any time makes the machine very useful, economical and water conserving.

The machine is built in different sizes to fit the different size tractors. It is very maneuverable and easy to handle. It can work very close to headgates or checks; lifts up over and continues on working in the ditch without damage to ditch banks or headgates.

Several views of the ditcher are shown on the following pages.

Both sides of the ditch can be cleaned at the same time by using the double boom or extension unit, Photograph No. 3, depositing the dirt and debris equally on each bank.

Photograph No. 1

There are many other uses for the machine--filling trenches and ditches, leveling dikes, cleaning and making feeder or tail ditches. It can dig deep or just stir moss in a canal, Photograph No. 2. The machine will work while going forward or backward, Photograph No. 3. If siphon tubes are running on one side of a ditch, the machine can clean the other side without disturbing the tubes, Photograph No. 4.

Another important feature about the ditcher--it is easily raised to a traveling position, giving road width clearance and maneuverability, Photograph No. 5.

If further information is desired, write the Chief Engineer, Bureau of Reclamation, Attention: Code 410, Denver Federal Center, Denver, Colorado 80225.

Photograph No. 2

Photograph No. 3

Photograph No. 4

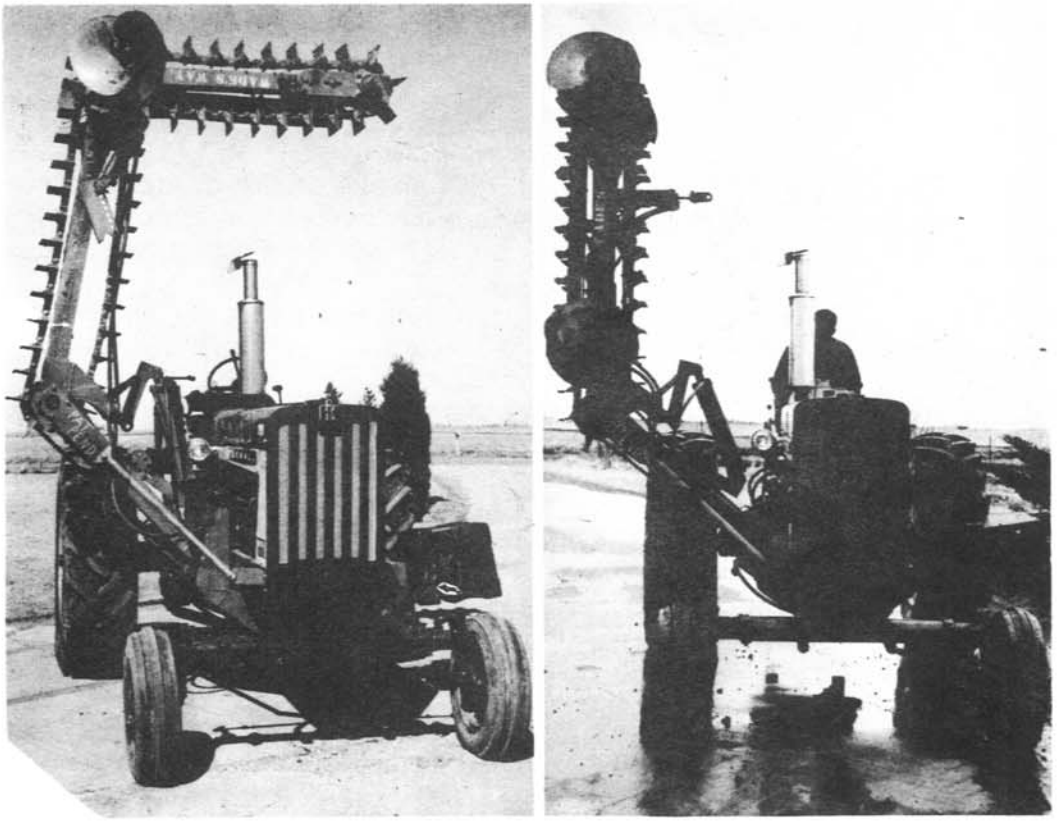

Photograph No. 5

* * * * *

TOUGH COMPACT FRONT LOADER

(Reprinted by permission of GRIST, January-February 1966 issue, a publication by the National Conference on State Parks, Washington, D.C.)

A new 4-wheel drive front loader capable of turning in its own tracks, strong enough to handle 1,000 pounds, and able to run for an hour on a gallon of gasoline is being produced by a manufacturing company in North Dakota. It is an unusually versatile machine which not only handles all the usual front loader jobs but is easily converted to rotary snow plow or fast-acting backhoe, using attachments available from the manufacturer.

Use and demonstrations of a small front-end loader indicate it has numerous applications.

Jack Fink, Assistant Chief of Equipment Maintenance, National Capital Region, NPS, reports on one recent demonstration in which the loader unloaded a carload of salt in just a little more than an hour, or about half the time required with previous unloading methods. This speed is due in part to the fact that the machine's 47-inch turning radius permits it to turn around inside a boxcar. Yet it is strong enough to perform many of the tasks often handled by machines twice as large.

The 4-wheel drive on the machine has dust free units sealed in oil. There are no transmissions or differentials. There are double-acting lift and tilt hydraulic cylinders to control the load.

Elimination of hand labor is the outstanding feature of the compact, powerful little machine which has been accepted by the Government for use by the Park Service and Job Corps, as well as the Forest Service.

This is the only front-loader known that will dump a load over the top of an 8-foot wall yet is compact enough to fit into a 1/4-ton pickup truck.

Attachments for the loader include a tree digger, snow plows, sweepers, post hole auger, pallet fork, backhoe, manure fork, tamper, and post driver.

Some park operations for which the loader has special adaptability include foot trail construction, sidewalk building, road work, excavation, tree planting and removal, masonry hauling and general cleanup work.

Photographs of the loader are shown on the following page.

If further information is desired, write the Chief Engineer, Bureau of Reclamation, Attention: Code 410, Denver Federal Center, Denver, Colorado 80225.

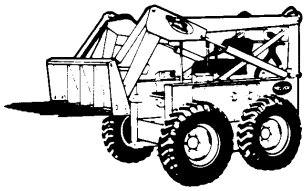

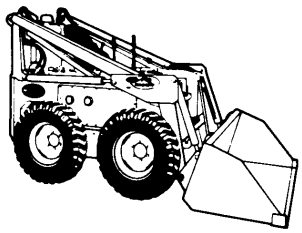

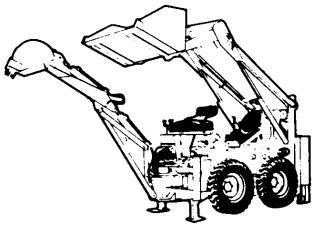

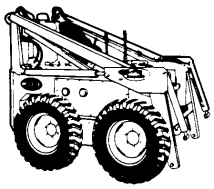

* * * * *

HOW TO KEEP A SAFETY PROGRAM ALIVE 1/

by
Murphy W. Bradhurst

John MacDougall, the operator of a drill press, didn't wear his safety goggles one day and got a steel splinter in his eye. The entire plant was galvanized into action. The word came down from on high, supervisors called meetings, sent memos, used strong language. Some of them posted penalties for infractions of safety rules. Others prowled their departments on inspection tours. All safety devices were in constant use--for about two weeks. But gradually the crisis faded, the employees and the supervisors became careless. And in about two months, there was another avoidable accident.

Most company safety programs are sound; it's in the follow-through that they fall down. This is where the supervisor comes in, for he's the only one who's mainly responsible for safety.

1/Reproduced by permission of the editor from an article appearing in Supervisory Management, February 1966.

The supervisor's job, and it's a tough one, is to make sure that safety isn't a spasmodic, sometime thing. He has to keep the workers interested in safety. This isn't easy, because safety can become a pretty tired subject. But here are some suggestions on what supervisors can do to make employees safety-conscious. They are based on programs that have worked for other companies.

1. Get employees actively working on a safety program. Pick out a couple of workers to act as safety inspectors each month. Rotate the assignment, so that everybody gets a crack at it. Give them a checklist of what to watch for in the way of safety violations. At the end of the month, have them turn in a report on any unsafe practices and conditions they have noticed. Of course, serious problems should be reported at once. It helps if they have special badges indicating they are inspectors.

At one company that tried this kind of program, workers reported 306 unsafe conditions in a 12-month period. Almost all were important enough to require action.

2. Rate the safety performance of every worker in the department. And make sure that everyone knows that safety is an important category in the performance rating.

3. After an accident, capitalize on the natural curiosity that results. Explain in detail what happened.

4. Publicize cases where safety equipment has prevented an accident. Some companies maintain displays of cracked safety glasses, dented hard hats, etc., with the name of the worker who avoided having an accident because he was protected: "Joe Blank can still see because he was wearing these safety glasses."

5. Another gimmick is the "X marks the spot" technique--putting signs up wherever an accident occurred. A typical sign might read something like this: "Injury No. 12 occurred here. Joe Johnson slipped on a grease spot, sprained his ankle."

6. Try to sell employees on the need for reporting "near misses" as well as actual accidents. It may seem to an inexperienced person that the cause of a near accident is something that will never happen again. But if the incident is reported and studied by a safety expert, it may reveal certain conditions that should be changed.

7. Have safety offenders prepare a written report stating what they should have done to avoid the accident. This may stop them from making the same mistake again. Also, don't forget that safety violators are choice candidates to serve on the safety committee.

8. At least one company is using a camera to take on-the-spot accident photos. The pictures make it possible to study the conditions that caused the accident, and can be posted on bulletin boards to dramatize the mishap.

9. As much as possible, try to get safety into the home. The truly safe worker has to make safety more or less a way of life. To develop interest in safety at home, one company publishes a safety quiz for employees' wives in the company magazine. At frequent intervals, a plant safety man picks one of the wives' names at random and phones her to see if she knows the answer to the safety question. If she does, she gets a $10 grocery order.

Supervisors can do a lot to reduce accident rates if they are aware of certain accident facts. For example, there are accident "seasons" and accident "hours." Generally, more accidents occur in late summer and early fall, and during the hours just before lunch and just before quitting time.

Supervisors should also remember that new workers are a definite safety liability. Research by one of the big automakers showed that nearly half of all its accidents were caused by workers who had been on the job less than a year.

The Danger of Monotony

There are also specific kinds of jobs that need close attention from the supervisor because they have built-in accident factors. Repetitive jobs are dangerous because they can become monotonous. The worker who is bored may be inattentive and, as a result, ripe for an accident. One solution to this problem is to try to break up the work by giving the employee other assignments or by having several workers take turns on the job.

* * * * *

WEIGHT LIMIT SIGNS

Posting of weight limit signs will be required on all Bureau of Reclamation bridges. The weight limit signs are to be made in accordance with Standard Design Drawing No. 40-D-6093 on the following page. It will be noted from the drawing that the sign is in conformance with standards specified by the Bureau of Public Roads.

The signs are to be placed, one at each end of a bridge on the right side of the roadway facing traffic. The supporting channel posts are to be embedded below the ground surface as shown on the drawing and as close to the bridge ends as practicable.

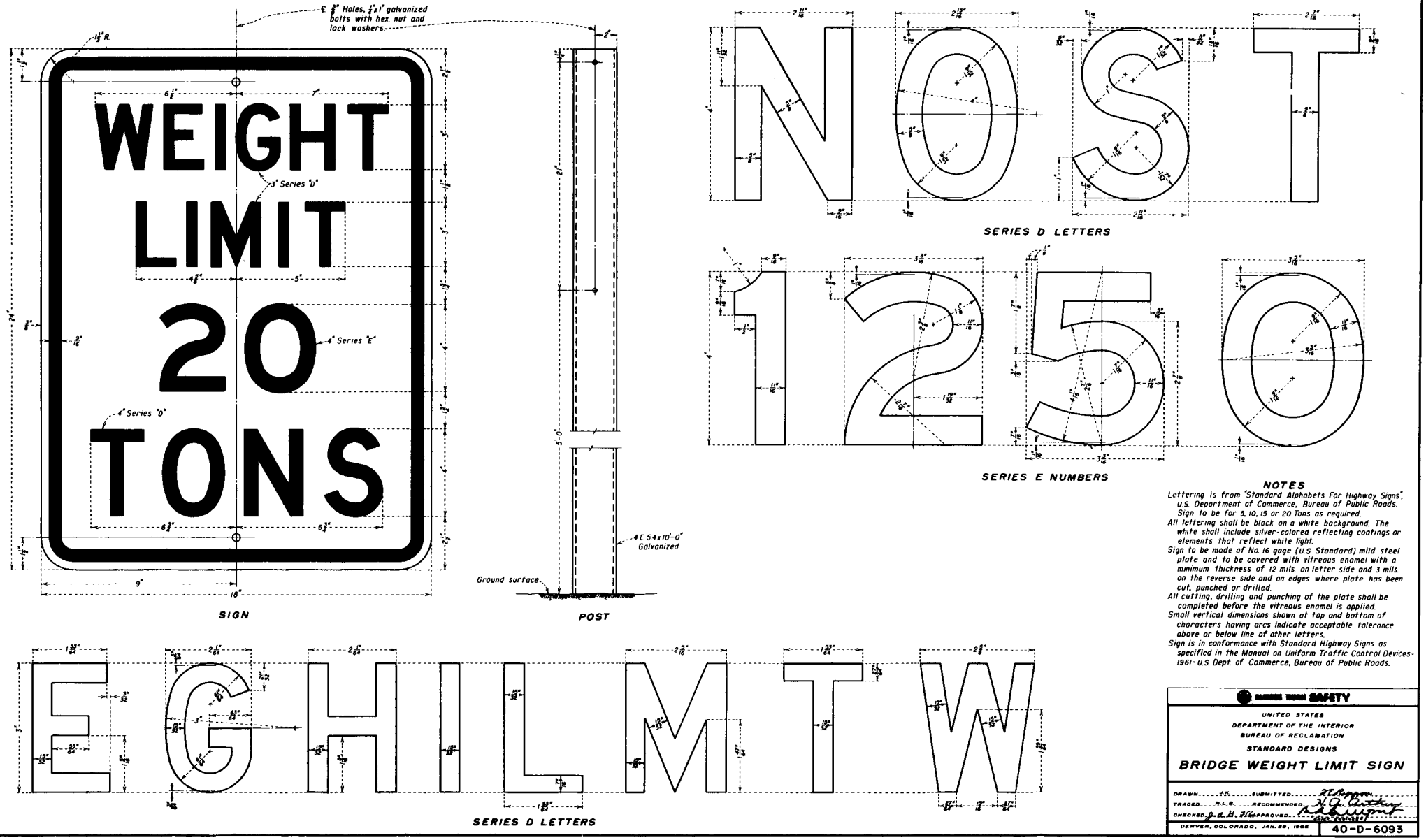

Figure 1 Weight Limit Signs

For the benefit of others seeking a standard sign design, copies of the drawing can be obtained from the Office of Chief Engineer, Bureau of Reclamation, Attention: Code 410, Denver Federal Center, Denver, Colorado 80225.

* * * * *

OIL ADDITIVE STICKS TO ITS JOB 1/

Oils that form a tough film of chemical "ball bearings" are helping industry to meet exacting new equipment demands.

The proprietary product is a wear-arresting agent that is creating new dimensions in oil efficiency and endurance. The finely blended new chemical was born of over 20 years of research.

Adding the new agent to industrial oils causes oil molecules to bind together forming high film strength. In addition, the substance is drawn to rubbing surfaces forming a boundary lubrication film, one molecule at a time.

Developed by a firm in Texas, the treated oils are: hydraulic oil, air compressor oil, turbine oil and air tool lubricant.

Ball Bearing Blanket

The "ball bearing" blanket of molecules allows opposing rubbing surfaces to slide by one another with less friction.

Even precision metal surfaces are imperfect. They have millions of microscopic jagged peaks. These peaks, grinding against those on the opposing surface under pressure, cause an ordinary lubricant to rupture, allowing metal-to-metal contact, seizure and wear.

The additive reacts with the hot, high points just before seizure, producing a high-temperature synthetic lubricant. The high points flow, relieving pressure, seizure and wear. The altered metal has a surface which is much smoother and easier to lubricate, according to the developer.

Tests Tell

Since the additive was perfected, it has been exhaustively tested. The most significant of these tests was a radioactive wear-study experiment.

1/Reproduced by permission of the editor from an article appearing in The Iron Age, May 12, 1966 issue.

With the compression ring made radioactive, an engine was operated to simulate severe field conditions. The oil flowed past a Geiger counter into the oil pump inlet. Thus it was possible to relate top ring wear to the Geiger count of the circulating oil.

As wear occurs in this test, more radioactive particles contaminate the oil, and the degree of contamination can be measured accurately.

The treated oil allowed only 2.7 mg per hour less. An identical oil without the monomolecular chemical allowed 3.5 mg per hour metal loss.

How Long, How Well

How long and how well can an oil stand up to the terrific pounding working parts must take? The universally accepted Timken test is a good indicator. It is used to measure the load per square inch an oil film can withstand before rupturing.

The new agent was thus tested against four major oils. Duplicate tests were conducted to preclude error. Result: The new oil withstood pressures of nearly 25,000 psi; others only pressures of between 7,990 to 14,425 psi.

Field tests are equally impressive. Hauling heavy machinery was causing fantastic strains on the trucking fleet of a California firm. "Heads often cracked from overheating, and the engines were suffering undue carbonization and sludging," reported the owner.

Stopped Cracking Heads

The new oil was then substituted for the ordinary brand of oil being used. The monomolecular action caused a sharp drop in engine heat; heads stopped cracking. Other ingredients helped eliminate sludging.

Other quality advances demonstrated by the agent combat other major obstacles to good lubrication: temperature, rust, corrosion, deposits, foam and water.

If further information is desired, write the Chief Engineer, Bureau of Reclamation, Attention: Code 410, Denver Federal Center, Denver, Colorado 80225.

* * * * *

LITTER-LUGGER

If you have a problem with litter, why not do like the Salt River Project, try the "litter-lugger."

DON'T BE A

LITTER-BUG

USE THIS

LITTER-LUGGER

PUT YOUR EMPTY CANS, BOTTLES AND TRASH IN THIS BAG WHILE HAVING FUN AT THE SALT RIVER PROJECT LAKES—THEN LUG YOUR LITTER HOME!

LEAVE YOUR RECREATION AREA CLEAN FOR THE NEXT GUY—ENCOURAGE HIM TO LEAVE IT CLEAN FOR YOU!

THIS LITTER-LUGGER PROVIDED AS A SERVICE OF THE

SALT RIVER PROJECT

ARIZONA BOATING & WATER SPORTS LAWS . . .

(condensed form) Chapter 3, Article 1

5-303 Any person who operates any watercraft in a careless or heedless manner is guilty of careless operation.

5-304 No person shall operate any watercraft or swim in a manner which shall unreasonably or unnecessarily interfere with other watercraft. Anchoring or swimming in heavily traveled channels, or blocking launching areas shall constitute such interference.

5-305 No person who is under the influence of intoxicating liquor, narcotics or habit-forming drugs, shall operate a watercraft. Any passenger found in such condition is subject to 13-379, D&D.

5-306 The operator of any watercraft involved in an accident shall immediately stop at the scene, give his name and address to the person struck or the operator or occupants of the watercraft collided with. He shall render to any person injured, reasonable assistance, and promptly report such accident to the nearest or most convenient law enforcement agency.

5-306.1 The operator of a watercraft under power shall yield the right of way to any craft not under power. Normal traffic on the waterways of this state shall be counter-clockwise. Watercraft leaving the shoreline area shall yield right of way.

5-306.2 No person shall operate a watercraft at a speed greater than is reasonable and prudent under the conditions.

5-306.4 Every watercraft on the waters of this state shall be numbered by the Arizona State Highway Department.

5-306.5 The identification number shall be placed on both sides of the bow and clearly visible. The certificate of number shall be available at all times on the watercraft while in operation.

5-307 No watercraft shall be loaded with passengers or cargo beyond its safe carrying capacity.

5-308 No watercraft shall have in tow a person or persons unless such watercraft be occupied by at least two persons. One person shall operate the boat and the second person shall observe the towed person. No watercraft shall have in tow a person on water skis, surfboard or other contrivance after dark.

5-309 All watercraft shall carry a U.S.C.G. approved life jacket, buoy, or buoyant cushion in serviceable condition for each person on board. Any child under eight years of age shall wear a life preserver at all times while on board a watercraft.

5-310 All watercraft when anchored in a normal passageway shall from sunset to sunrise display a steady light. All watercraft when under way at night shall exhibit a white light aft to show 360° and a combined bow light lower than the white light, showing green to starboard and red to port.

5-311 Dumping refuse or debris on the shoreline or waterways is prohibited.

5-313 Penalty for violations of this chapter shall be by a fine, and/or imprisonment.

SALT RIVER PROJECT LAKES

CENTRAL ARIZONA'S WATER PLAYGROUND

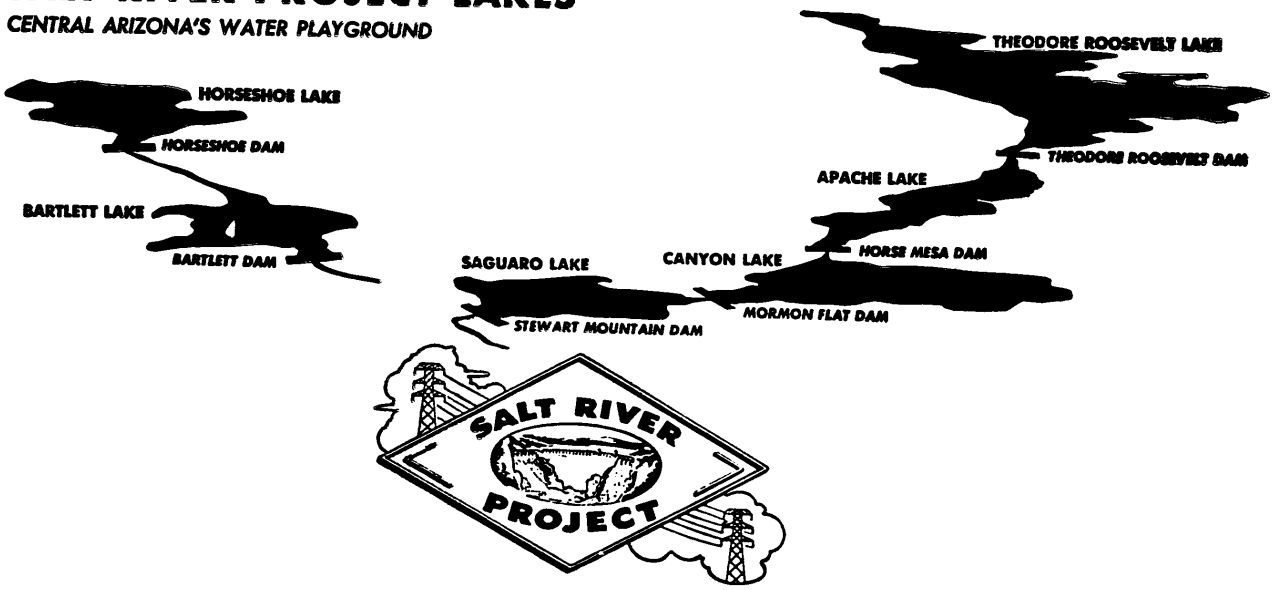

GPO 859-600