Department of the Interior
Bureau of Reclamation

OPERATION AND MAINTENANCE EQUIPMENT AND PROCEDURES

RELEASE NO. 44

April, May and June 1963

LAST COPY - DO NOT REMOVE

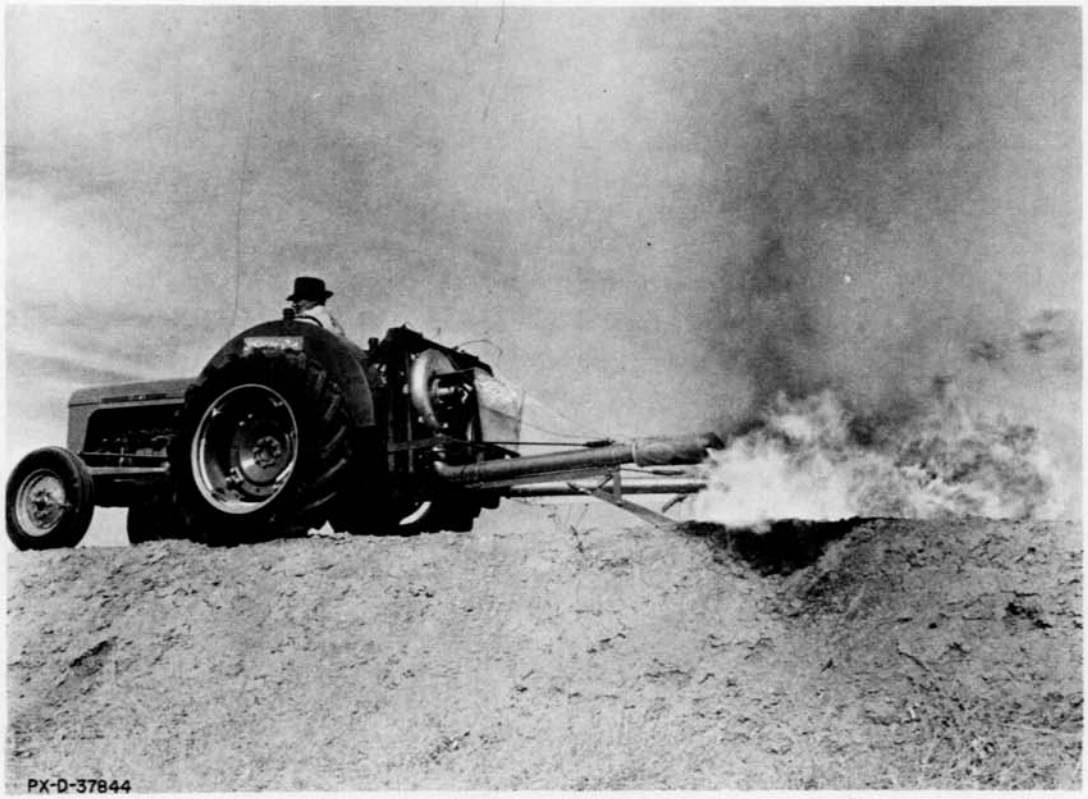

LAST COPY - DO NOT REMOVE

CONTENTS

A Practical Lesson in Lubrication
Wheel Winch for Nonslip Rear Ends
Weed Burner
Recording Chart Winding Machine
Improving Grease Fittings Seal
Preventing Breakage in Pumps
Project Inspection
Counterweights to Lift Trashrack Covers
Barrier Posts Stop Trucks, Not People
Drain Cleaning Tool
Keeping the Brush in the Can
Confusing the "Strong Arm Guys"
Movable Launching Ramps
Propane Torch Rest

LAST COPY - DO NOT REMOVE

Cover Sheet. Lightweight burner mounted on tractor. The complete unit weighs only 115 pounds. See article on page 8. PX-D-37844

OPERATION AND MAINTENANCE EQUIPMENT AND PROCEDURES
Release No. 44

April, May and June 1963

INTRODUCTION

The Operation and Maintenance Equipment and Procedures release, published quarterly, is circulated for the benefit of irrigation project operation and maintenance people. Its principal purpose is to serve as a medium for exchanging operation and maintenance information. It is hoped that the labor-saving devices or less costly equipment developed by the resourceful water users will be a step toward commercial development of equipment for use on irrigation projects in a continued effort to reduce costs and increase operating efficiency.

This issue, page 1, includes an article on proper lubrication of motor vehicles; page 8 mentions a weed burner which is lightweight and can be mounted on tractors, pickup trucks, jeeps or trailers. Page 13 includes an article on the inspection of projects which one project operator considers a "must." Several other suggestions submitted by project employees and others are also included in this issue of the bulletin.

Attached to this issue of the bulletin is an index of material contained in Releases No. 1 through 44. The new index supersedes the one dated June 1960, which can be destroyed.

To assure proper recognition of those individuals whose suggestions are published in the bulletin, the suggestion number as well as the person's name is given. All Bureau offices are reminded to notify their Suggestions Awards Committee when a suggestion is adopted.

* * * * *

Division of Irrigation Operations
Office of Chief Engineer
Denver, Colorado

A PRACTICAL LESSON IN LUBRICATION

(Reprinted from the September 1961 issue of WESTERN CONSTRUCTION with the permission of the Editor)

From the University of California's Motor Vehicle Maintenance Short Course, sponsored by the Institute of Traffic and Transportation Engineering, come these ideas on equipment lubrication. Here are valuable facts and suggestions on--

1. The high cost of engine dirt and how to avoid it
2. How regular lubrication pays off
3. Why you need a lube chart for every rig
4. Why hot engines cost less to run
5. What too much oil can do

Dirt is the greatest enemy of lubrication. Particles of dirt, whether it is dust breathed into the engine, dust in the oil, or products of contamination such as hard granular carbon or lead salts produced from the fuel during combustion, cause more repair bills on equipment than any other single item.

A poorly maintained air cleaner will increase the wear of cylinder and piston rings by 10 times compared to the wear in the properly maintained air cleaner. Excessive lead salts from the use of heavily leaded fuel increases the wear in upper piston rings nearly 3 times compared to the wear with nonleaded fuel. Dust getting in the oil or grease during storage, or while it is being handled, will make a cutting compound out of the lubricant. There is actually less removal of metal when a bearing is dry than when it is lubricated with dirty oil or grease.

Wear from dirt is difficult to combat in field service. The operator gets used to working in dust and dirt and is not alarmed by it. The vehicle does not immediately break down and quit when lubricated with dirty oil or grease. The damage is of an insidious nature, having more serious effect than is apparent. A little dust getting into the high-boy tank from which bulk oil is drawn, does no immediate harm and is too often ignored. It is not until the repair cost for vehicles which have been carefully supplied with clean lubricants, clean fuel and clean air, is compared with the cost for vehicles in identical service which have been maintained with careless attention to cleanliness that the high cost of dirt is appreciated.

Manufacturers of quality fuels and lubricants are extremely careful to avoid contamination of their products and take every precaution to deliver those products in clean condition. Carelessness in handling those products when servicing equipment will nullify such precautions and increase the cost of repair and maintenance.

Ball and roller bearings are particularly sensitive to dirt. The hard steel surfaces are easily scratched by dust. Common dust is made

up of about 90 percent mineral matter such as quartz and corundum, both of which are harder than any steel. When particles of dust are caught between two moving surfaces they will most certainly scratch those surfaces. Once mating surfaces are made rough, they never again can maintain a uniform unbroken film of oil or grease and good lubrication can no longer be maintained.

Manufacturers of quality vehicles spend a great deal of money to produce smooth straight parts and bearings. This effort can all be wasted by admitting dirt into lubricants because of careless handling and application during lubrication.

Grease and oil should be stored in clean containers, free from rust and dirt, especially on the interior. Lubricant containers should be kept in a clean place, out of the wind and weather, and completely covered and sealed. Inspection of high-boys in which bulk oil is stored should be made at frequent intervals and the tanks emptied and cleaned at periodic intervals when storage is low. Such cleaning will avoid stirring up sediment at the bottom and mixing it with new oil poured in. Drain-back vents should be sealed against dust admission. The value of a few pints of oil saved by draining back into the high-boy will amount to a small fraction of the cost of repair due to dirty oil.

When greasing fittings, the fittings and grease gun attachment should be carefully cleaned with a clean rag before application. Grease buckets should be kept clean and covered at all times except during the short interval while grease is being withdrawn.

Drums should be stored on timbers off the ground and on their side to avoid as much accumulation of dirt around the plugs as possible. By screwing a capped 2-inch pipe nipple into the large hole immediately upon receipt of the drum of new oil, entrance of dirt is largely avoided. When oil is wanted from the drum, the cap is removed from the nipple and accumulated rust and dirt in the threads fall harmlessly on the outside, leaving the oil uncontaminated. Inserting the hand pump into the nipple makes the drum serve as a high-boy. This is particularly useful when outside storage is necessary in snow country.

There is always some moisture in the air. When air is cooled below the dew point, this moisture condenses into water. Water in oil and grease produces corrosive acid under certain conditions. Keep fuel tanks (especially diesel fuel tanks) and oil drums as full as possible to reduce the amount of moisture-laden air above the liquid.

Use Regular Lube Periods

Continuous lubrication of bearings is very important. By missing a lube job on a single bearing just once, a vehicle may break down for a long and expensive repair period.

Once a bearing is made rough by operating without proper lubrication for just a few seconds, the oil or grease film will rupture each time the rough spot comes under load. This permits metal-to-metal contact and earlier-than-normal bearing failure will surely result.

The quantity of lubricant available to a particular bearing and the operating condition of the bearing determines the period between lubrication. Manufacturers have spent a great deal of time in designing bearings to provide the nice compromise between the factors involved so bearings will be properly lubricated if the recommended period between lube jobs is not exceeded.

Over-lubrication can cause needless repair bills and waste of money spent on lubricants. Pressures developed by grease guns can exceed a ton per square inch and careless use of such equipment will rupture seals. Lubricant will leak out the broken seals and thus the bearing will be starved for grease in a short time.

Too much oil in the differential will expand and foam and can be forced through seals into the brakes, making them useless.

Too much oil in the transmission will cause excessive foaming, especially with additive oils. Oil foam is of no value for lubrication. It does not have appreciable film strength and will permit metal-to-metal contact between the transmission gear teeth and in the transmission and damage will then occur due to insufficient oil.

Putting too much oil in the crankcase causes excessive oil consumption, with fouling of spark plugs and valves. With modern additive oils, the oil may foam excessively and in severe cases has caused repairs involving replacement of the main and con-rod bearings and a regrind on the crankshaft.

Automatic transmissions are especially sensitive and can be ruined by putting in too much lubricant (which always should be of a quality suitable for the particular transmission).

Under-lubrication is largely the result of extending the period between lube jobs beyond the recommendations of the manufacturer.

Poorly fitted or broken lubricant seals and plugged oil lines also account for damage due to under-lubrication. Specific periods between lube jobs are based upon average operating conditions.

When equipment is operated during very hot weather, in extremely wet conditions or at continued high speed and power output, the period should be shortened to avoid damage from under-lubrications. Judgment and experience are depended upon to compensate for these unusual conditions. Intervals between lube jobs are usually based upon the mileage reading of the odometer and this has proven to be quite satisfactory for the over-the-road operation of truck fleets and

passenger cars. However, there are many cases when mileage is not a sound basis for establishing lube periods. When trucks are used in construction work or in road repair and maintenance, it is possible for the vehicle to go backward nearly as much as forward. Such backing will not be recorded. This is especially noticeable with power graders and loaders. Also, a truck on construction work may operate most of the day in low gear. Obviously the engine, transmission and engine-driven accessories will require lubrication in one-fifth the mileage as compared to a vehicle in over-the-road operation.

A tachometer which accumulates the engine rotations and reads in "engine hours" based on average engine rpm, provides a reliable basis on which to establish lubrication periods for such equipment.

How We Use Lube Charts

On equipment used by the California Division of Highways and kept in operation by the Equipment Department the use of individual, permanently mounted lubrication charts is proving an effective aid to better lubrication and maintenance for trucks and heavy equipment.

This is especially true where operators are shifted from vehicle to vehicle depending upon working conditions and where vehicles are serviced at widely scattered stations.

The lubrication charts carry a plan sketch of the vehicle with lead lines running to the major items to be lubricated. A simple code system is used to indicate the periods at which lubrication of the various items is specified and also the quality and grade of lubricant to be used. A pencil check is made when the item is lubricated and the operator dates the operation performed and signs his name. The 1,000-, 5,000-, and 10,000-mile operations are separated and indicated by suitable code. Many vehicles, such as motor graders, require daily lubrication of some items. These are also indicated on the lubrication charts for those pieces of equipment.

The pencil checkmarks, dates and names are easily erased on the plastic surface at the end of the particular lube period, making the chart ready for the new servicing operation.

The lubrication charts serve as a check system to avoid missing an important item. They make it easier for an operator not entirely familiar with the vehicle to do a good lube job. They provide an up-to-date current account of the status of lubrication for that vehicle on any particular day. When a piece of equipment is transferred from one station to another, the new operator knows precisely the status of lubrication. Waste due to lubricating when not needed or due to damage because of lack of lubrication is avoided.

The charts function as valuable aids to proper lubrication. They are supplementary to the permanent records kept for each vehicle.

Such records are usually filed in the foreman's office to keep them clean and presentable. The permanent records are often not conveniently available to the operator of the vehicle and hence do not serve as a satisfactory guide to lubrication.

For large fleets of the same type vehicle the plastic charts are printed and unique items such as tire pressures, coolant, oil and grease capacities are added prior to installation on the vehicle. Locating the lubrication chart on the vehicle door where it is conveniently accessible and yet protected by the seat when the door is closed seems to be convenient. For small numbers of vehicles of the same type the charts are prepared by sealing the multilithed form between plastic sheets. Several years of service show little sign of wear on these charts.

Hot Engines Are Best

Hot (but not too hot) running engines show reduced wear and give better fuel mileage. In extensive tests, the wear rate in engines was reduced appreciably by operating with reasonably high oil and water temperatures as compared with operating with cool oil, cool cylinder wall temperature and cool engine water.

Thermostat setting has an important effect on engine wear and on fuel mileage. In one test, fuel mileage was increased approximately 6/10 mile per gallon by using a 180° thermostat as compared to the mileage obtained with 140° and 160° thermostats.

There was a noticeable decrease in oil sludge accumulation with the 180° thermostat. Fuel is more completely vaporized in a hot engine; combustion is best; and fuel mileage will be a maximum.

It is essential to keep crankcase temperature in excess of 150° F if water of condensation is to be avoided in the crankcase. The dew point (that temperature at which dew or water forms) in engine crankcases has been found to be about 150° F because of the high moisture of the air in the crankcase. This moisture is produced by burning of the fuel and the moisture vapor is part of the blowby gases. A gallon of gasoline burns in operation to form more than a gallon of water. This water can be seen as a visible cloud coming from the tailpipe on a cold morning and forms the vapor trails made by airplanes flying at altitudes where the temperature and humidity are right for such condensation to occur.

Water in crankcase oil contributes to corrosion wear and sludge formation. Fuel dilution in crankcase oil weakens the film strength of the oil. Both of these crankcase oil contaminants are kept to a minimum by operating the engine at relatively hot temperature.

Of course, operating an engine at excessive temperature should be carefully prevented to avoid warped valves, scuffed rings and cylinders, burned valves, and excessive oxidation of the crankcase oil.

Here again the nice compromise is required for most economical operation.

Purpose of Lubrication

The basic purposes of correct lubrication in friction-type bearings are to: 1. Maintain an unbroken lubricant film. This prevents metal-to-metal contact between moving surfaces, and avoids excessive wear and damage to the surfaces. 2. Reduce the heat of friction to a minimum. This reduces the power loss in operating the bearings, hence in operating the machine, because the power loss in a machine is the accumulative sum of the power loss in the individual bearings. 3. Carry away heat that is produced. This is the job of the oil distribution systems. More heat is carried away in a pressure system than a gravity or splash system. Bearings must be operated at reasonable temperatures which will not melt out the lining metal in journal bearings and will not destroy guide bearings.

Whenever a failure occurs in a properly fitted bearing, it is because one of these basic purposes of good lubrication has been violated.

The viscosity of lubricating oil, whether for crankcase or gear case use, should be such as to provide a strong oil wedge in journal bearings and also supply adequate film strength to handle the bearing pressures involved without rupture of the oil film in all bearings. The manufacturers' recommendations for oil viscosity are formulated after a great deal of careful study by highly qualified technicians. They should not be ignored if low cost operation is to be maintained.

The quality of lubricating oil, both for crankcase and gear case is prescribed by the type of service involved. The cost of repairs and the overall operating expense for a fleet of vehicles reflects the degree to which the lubricating oil is balanced for the demands made upon it. An oil better in quality than demanded by the service employed provides insurance and in many cases may be operated for extended drain periods that balance the greater cost of the oil.

Oil Filters and Air Cleaners

Oil filters are definitely worth while to reduce repair costs and extend the useful life of engines. If properly maintained and serviced they may triple the life of an engine. Oil filters cannot remove liquid contaminants. Their function is to remove the solid contaminants which account for abrasive wear in engines. The liquid contaminants can be reduced by using 180° thermostats and keeping engines hot. They can be removed only by draining out the contaminated oil.

Air cleaners are the most effective devices available to prevent excessive engine wear. A good air cleaner will reduce engine wear

to 1/10 of the wear with no air cleaner, in many cases. The tube system between the air cleaner and the engine should be completely airtight. A 1/16-inch hole in this system will admit enough dirt to double the wear from an otherwise good air cleaner. The air cleaner must not only filter dirt from the air going to the engine; it must also supply adequate breathing air to the engine without creating excessive back pressure which will decrease power and increase fuel consumption.

* * * * *

WHEEL WINCH FOR NON-SLIP REAR ENDS
(Suggestion R5-WP-63-2)

Mr. John W. Berry, Supervisory Surveying Technician, on the Wichita-Cheney Project, Texas, designed a wheel winch for use on vehicles stuck in mud, ditches, etc., to enable them to pull out under their own power. Actual use during the past several months has proven the winch to be very effective.

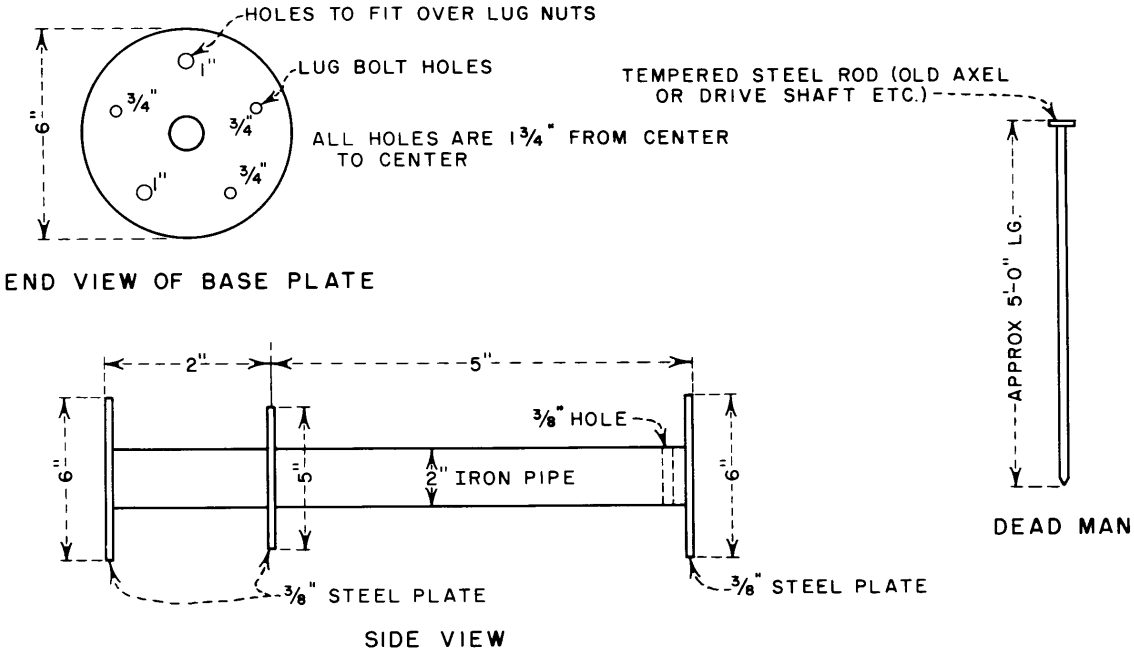

With reference to the sketch above, the baseplate is bolted to the wheel with three lug nuts allowing the other two nuts to hold wheel and tire on vehicle. A 5/16-inch #6 x 19 Hemp center cable is threaded through the 3/8-inch hole drilled in the 2-inch pipe which serves as the winch axle. Approximately 50 feet of cable is generally used.

The free end of the cable is attached to an anchor rod placed preferably in alinement with the side of the vehicle. A 1-inch-diameter tempered steel rod approximately 5 feet long will serve satisfactorily as an anchor post. (A surplus axle or drive shaft can be used.)

The vehicle can be put in gear and the non-slip rear end will pull the vehicle out of a ditch or mud. This winch unit will work on any vehicle with a limited slip rear end, by varying lugbolt holes, size of baseplate, or both. One man can successfully accomplish the operation which could otherwise require the calling of a service truck.

The photograph shows the wheel winch in use attached to lugbolts on the rear wheel of a vehicle which has become stuck in soft ground. Note the rear bumper is resting on the ground. The winch can be used on positraction-type vehicle only.

* * * * *

WEED BURNER

Project operating personnel have been interested in the weed burner shown on the following page, which has been used on several projects to advantage.

Because of its lightweight and design, the burner can be mounted on tractors, pickup trucks, jeeps, or trailers. Lightweight aluminum is used in 90 percent of the parts. The complete unit weighs only 115 pounds. A tripod mounting bracket requires only three boltholes to attach the burner to a vehicle in operating position. Legs on the tripod are hinged to allow mounting the unit higher or lower. Mounting space is easily adjustable to fit needs of any operation. The tripod is designed so the burner can be turned in any direction--throughout a 360° horizontal radius and a 45° vertical movement. The unit, travelling up to 4 miles per hour will satisfactorily cover an 8-foot swath and effectively destroy green weeds. Rate of travel, of course, is faster on dry or prekilled weeds.

PX-D-37846

PX-D-37845

The commercial burner is available with a 15- or 20-foot boom. All burners are equipped with a fuel gear pump with built-in bypass which automatically regulates fuel flow. The burner heads are constructed of 20-gage steel and burn at a rate of 5 to 25 gallons of fuel an hour depending on the task involved. The burner comes equipped with an industrial (concentrated flame) and standard (swath type) burning head.

There is no danger of flashback. The burner is designed to operate at low pressures which eliminate the possibility of flashback. An electric ignitor operated from the central control area insures added safety to operators.

The unit can be converted to a spraying rig simply by removing the burner head and inserting intake line to a weedacide or insecticide tank. When used for spraying, an air velocity of 140 miles per hour is attained. This insures an efficient "mist type" spray which covers all vegetation surfaces.

If more information is desired, write to Chief Engineer, Attention: Code D-400, Bureau of Reclamation, Denver Federal Center, Denver 25, Colorado.

* * * * *

RECORDING CHART WINDING MACHINE
(Suggestion R1-62-48)

A suggestion for a machine to wind recording charts was submitted by Orville E. Huskey, Powerplant Control Room Operator, of the Palisades Field Branch, Palisades Project, Idaho-Wyoming. The machine consists of two shafts that were machined to fit all charts that are used. See Photograph No. 1. One shaft is stationary and the other is mounted in ball bearings and is driven by a 110-volt electric motor over pulleys and belt. The motor is controlled by a pushbutton switch.

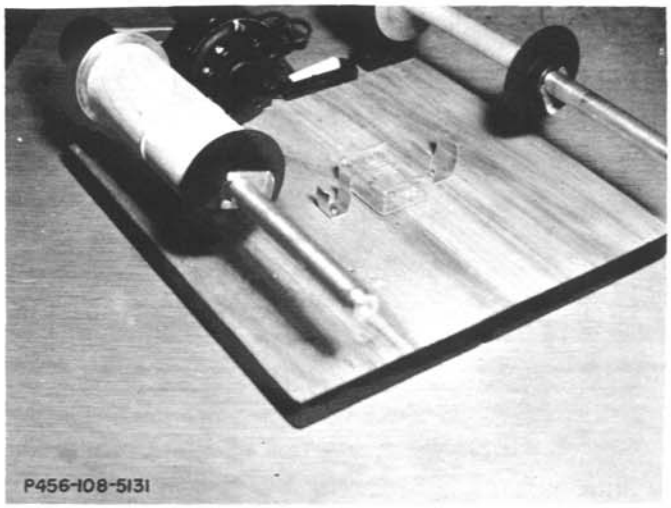

Photo No. 1

Two guide discs are placed on each shaft at the ends of the chart and clips are placed in grooves on the shaft to hold discs and chart in place. The drive shaft is spring loaded so the discs will fit tight

Photo No. 2

against the chart, and so it will turn with the shaft but at the same time act as a clutch if the chart is stopped and shaft is rotating. The machine will rotate in one direction only. To reverse the rotation of the chart, it is necessary to remove the chart from each shaft and place it on opposite shafts by turning the chart end for end.

The metal parts, except shafts, are finished with flat black enamel. The two shafts are made of aluminum so they will not rust. The machine's base is hardwood and is finished with clear flat varnish. The machine is used to unroll and reroll charts that have been in service, Photograph No. 2, when information is needed. The chart winding machine saves time, keeps the charts clean, and eliminates tearing of the charts.

To improve the machine, it has been suggested, that a larger reversible motor be used, one of about 1/75 horsepower--1,550 rpm would deliver ample power. Better control could be obtained by providing a rheostat in series with the motor. This would allow the chart to be operated at various speeds, and thereby enable the operator to better view the chart. By using a reversible motor, each shaft also could be mounted in bearings and used as chart drivers by placing belt from the motor to either shaft. This would enable charts to be rolled in either direction without removing charts from the shafts.

* * * * *

IMPROVING GREASE FITTINGS SEAL
(Suggestion R1-62-64)

A method of improving the seal of grease fittings has been suggested by Raymond W. Michels, Plant Mechanic, Maintenance Branch, Hungry Horse Project Office, Montana. Mr. Michels says that increased pressure from the automatic grease system has turned neoprene seals in the wicket gate swivels on power turbines backwards between the seal retainer and shaft, as the seal retainer has a 3/8-inch hole in it, and the shaft is one-fourth inch. In order to effect an inexpensive, sure and quick way of repair, Mr. Michels cuts a 1/16-inch support ring from scrap piece of 3/8-inch steel tubing and places it as shown in the following sketch.

In the repairing of 20 swivels, in which some of the original seals were used instead of new ones, none have ever blown out, although one end of the swivel was plugged and direct pressure of 3,000 pounds applied.

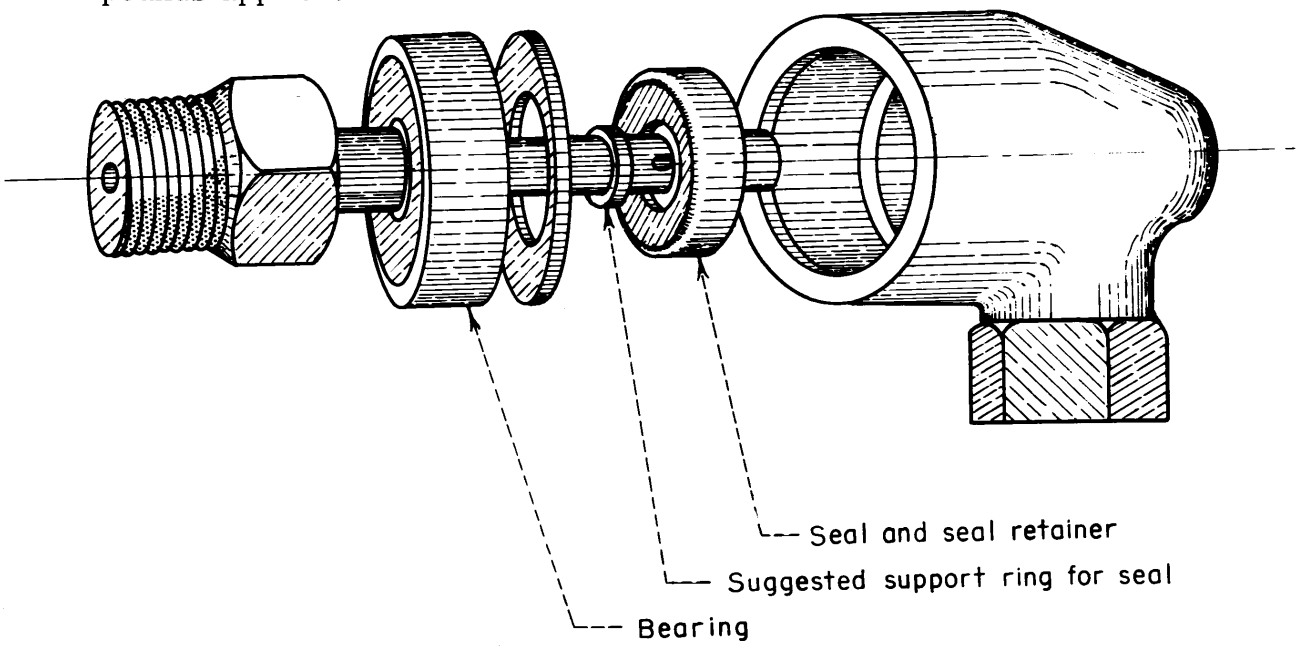

* * * * *

PREVENTING BREAKAGE IN PUMPS
(Suggestion R1CB-62-36)

Mr. Vernon R. Blank, of the Columbia Basin Project Office, Ephrata, Washington, has suggested a method for preventing the breakage in the bottom of pumps as a result of the plugging of drain holes, and the water freezing when left in the cavity. Mr. Blank fills the cavity with fiberglass and resin, completely filling and shaping the material to original dimensions.

The suggestion has been followed for the past irrigation season near Othello, Washington, and has been found to be effective. It has eliminated the necessity of the pump having to be removed from the structure, and brought to a shop and welded and/or unplugged. It also has eliminated many hours of welding in the repair of pumps, as well as time spent in pump disassembly to unplug drain holes.

* * * * *

PROJECT INSPECTION

The inspection of irrigation facilities on a project is a "must" that should be attended to, at least in part, on an annual basis. The following paragraphs will attempt to bear out the necessity of periodical inspection and planning, according to Royse Van Curen, Manager for the Boise Project Board of Control, describing the inspections made of the irrigation facilities of the Arrowrock Division, Boise Project. His report follows:

"A little history of the Arrowrock Division of the Boise Project should be considered as it has some bearing on the need for inspection.

"The project was built by the Bureau of Reclamation just after the turn of the century and is now at the 50-year stage. The project was built to bring irrigation water to 167,000 acres in the Boise Valley and to date that acreage is still served. Since the original construction, new reservoirs and storage space have been added and canal maintenance or improvement has received a big boost from a Government rehabilitation and betterment loan. Key works of the project--namely the storage dams--are classed 'Reserved Works' which the Bureau of Reclamation operates with irrigation interests paying their contracted share of operation and maintenance costs.

"The farmers have been responsible for the operation of the project since the approval of construction repayment contracts in 1926. At that time the project was divided into five irrigation districts who joined together to constitute a Board of Control. Representation to the Board of Control comes from each district on a per-acre basis giving each district an equal voice (per acre) in management and operation. Operation and maintenance charges are fixed by the Board of Control and passed back to the districts who are the collection agencies. All operating and maintenance charges are set uniformly so that each district or individual within the district has the same charge per acre. The Board of Control is the operating agency on the project for the five districts, with each district furnishing its proportionate share of the operating and maintenance costs. The operating forces consist of a Manager, Assistant Manager, Secretary-Treasurer and office personnel in the main office in Boise. Four watermasters' divisions with offices in the field are strategically located for smooth operation of 139,000 acres of the project with the balance of the Government rights operated by one of the five districts along with some of its own nongovernment irrigation. Operating forces of the Board of Control average close to one hundred permanent year-around employees.

"The need for a sound budget is a foregone conclusion and the only possible way to arrive at good budgeting is periodic inspection and study. A 50-year-old operation definitely will have lots of maintenance problems and it is essential that all angles be checked so that

a good sound rotation is upheld in preventive maintenance. Replacement of structures and rehabilitation of canals and laterals are two important items that have to be carefully fitted into each year's schedule. A number of less important items have to be studied and tailored to sandwich in with the more important work. The biggest problem is to be far-seeing enough to stay away from a pile-up of work that will all have to be done in a year or two.

"In order that the Board of Control might keep up the proper pace in operation and maintenance problems a comprehensive inspection each year is essential. A good inspection should bring all of the Board of Control members, district directors, interested farmers, and representatives of the Bureau of Reclamation together over a common idea. The inspection should be well planned to allow plenty of time for good inspection, but not so much time that interest can lag. Scheduling of stops on the tour should be tested prior to the actual inspection so that a fairly exact timetable might be maintained. Information and explanation concerning each stop should be written up and copied for each inspector's benefit to speed along any discussion at each stop point. Following the inspection a good report should be made with all the future work anticipated and as much as is possible, classified as to the time when it should be completed. Work should then be scheduled in an orderly fashion with particular attention being paid to balancing the amount of work for each year. Future inspections should then show whether or not the maintenance and operation program is ample and enough funds are being budgeted. If the project hasn't this type of problem, the inspection is very much in order just to familiarize the districts' directors with current operation procedures and problems, and the actual project itself. A good deal of time and effort should be expended in inspection of irrigation works by the people concerned with future operations in order to always keep the project in sound operating shape. Irrigation works involve a considerable investment and inspection tends to provide insurance toward a continual operation."

* * * * *

COUNTERWEIGHTS TO LIFT TRASHRACK COVERS
(Suggestion R1-62-81)

A suggestion by Floyd L. O'Banion, at the Chandler Powerplant, Yakima Project, Washington, to eliminate the hazard involved in lifting pump penstock trashrack covers, is described in the following article.

Due to the arrangement of pump penstock trashrack covers, it is difficult to lift the covers without danger, and is a safety hazard to anyone making the lift. The installation of counterweights has eliminated this hazard by permitting the operator to remain back from the open pits. The prevailing wind in the Yakima area blows against the back of the raised covers and has, on occasion, blown them shut when workmen have been raking the racks. This counterweight will also prevent this hazard, in addition to permitting an easier and safer lift.

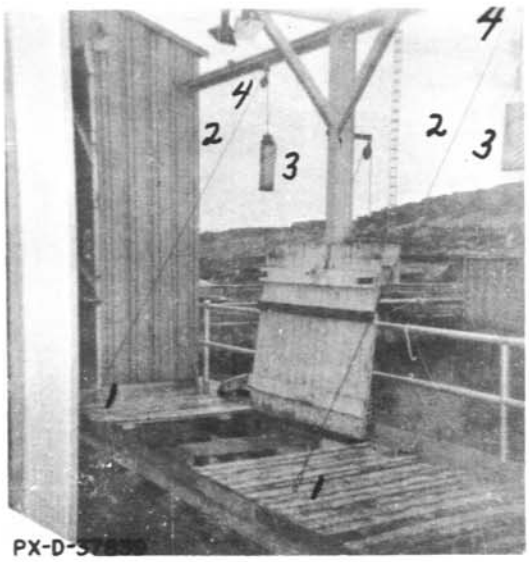

The photograph at left shows details of the installation:

1. Eyebolt with 1/4-inch cable attached.
2. 1/4-inch cable.
3. Counterweight bucket filled with sand.
4. 1/4- x 4-inch pulley.

* * * * *

BARRIER POSTS STOP TRUCKS, NOT PEOPLE

(Reprinted by permission of GRIST, May/June 1962 issue, a publication by the National Conference on State Parks, Washington, D.C.)

When you want a strong barrier that will normally prevent vehicles from passing, will not interfere with walking at any time, yet can be easily opened to allow maintenance or emergency vehicles to pass through, use the system devised by Mayo O. Zabriskie, Maintenance Supervisor at Colorado National Monument.

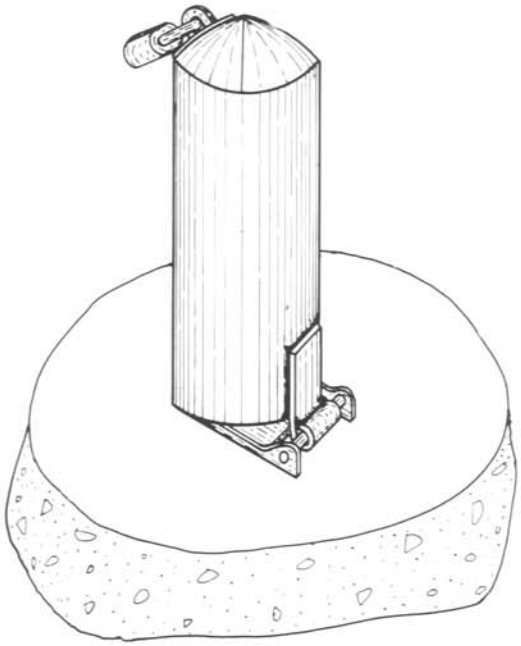

Mayo puts stubby metal barrier posts on hinges so that they can be laid down to allow an authorized vehicle to enter areas closed to visitor vehicles. To insure their remaining closed, there is an arrangement for padlocking built in.

The posts, of 4-inch pipe, 16 or more inches long, each have a hinge welded to one side of the base. The hinge is welded to a square metal plate imbedded flush with the pavement surface. As the diagram at left shows, the bottom of the pipe is open and the top is

cut in wedge shapes, bent in, then welded in a dome shape. With reference to the sketches below and on the following page, a steel pin of 3/8- or 1/2-inch stock with an eye in each end is fastened to an eye welded to the imbedded baseplate by means of a short bolt. This steel pin passes through the post and out of a slot cut in the domed top when the post is in an upright, or closed, position. A plate, with an oblong slit, is welded inside the pipe to serve as a guide for the steel pin, alining it so that when the post is being closed upright the locking loop on the upper end of the pin comes out of the slot in the dome.

Mayo tells us that the 4-inch-diameter pipe is best for the barrier since most vehicles can clear it easily when it is unlocked and laid down on the pavement.

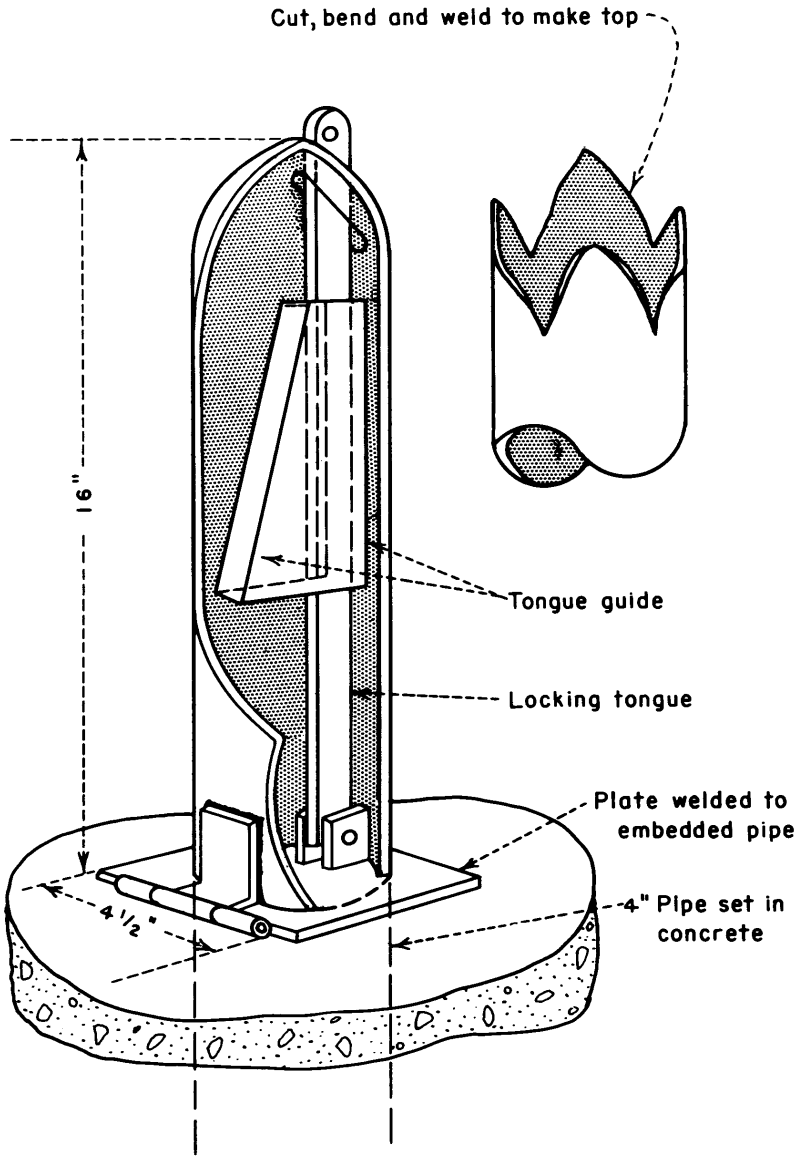

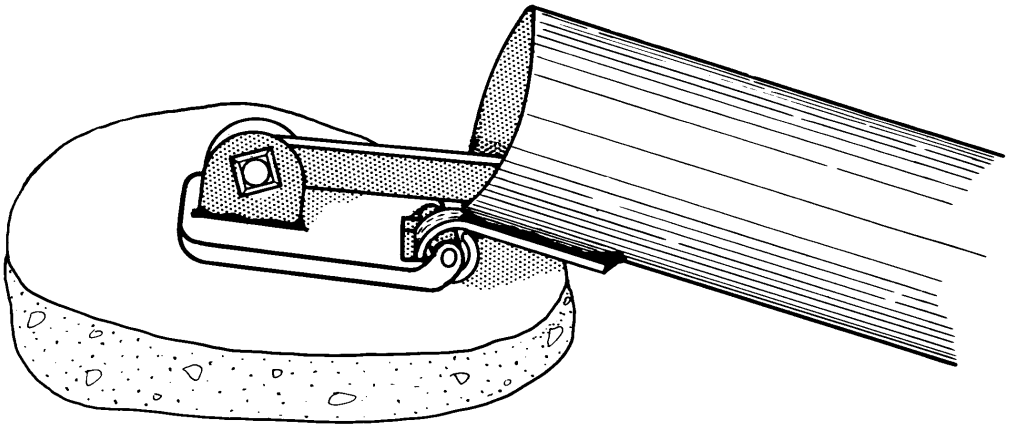

* * * * *

DRAIN CLEANING TOOL
(Suggestion R1-61-94)

Mr. William A. McLauchlin, of the Operation and Maintenance Division, Maintenance Branch, Boise, Idaho, has suggested a tool which is designed and built for cleaning 8- and 12-inch pipe and vertical and horizontal drains of similar diameter in a dam. However, the tool can be built to clean various sizes of pipe.

Figure No. 1 on the following page, represents an exploded view of the various parts of the drain-cleaning tool. Part No. 1, Shoe Assembly, is attached to the centerplates (Part No. 2) by a pin and wear bushing. When the tool is operating, centrifugal force causes the shoe to swing out against the deposit in the drain. The successful operation of this tool, especially in horizontal applications, is due to the fact that centrifugal force not only forces the cutting teeth outward against the pipe wall, but also holds the tool centered in the pipe regardless of uneven deposit of calcium.

Part No. 4, the ripper plate, is welded to the bottom of the shaft, Part No. 3, which is a standard 5/8-inch bolt, 5 inches long for attaching flexible sewer rod, powered by a 1/2- or 3/4-inch 500-700 rpm electric drill.

The ripper plate is for removing heavy deposits ahead of the cleaning shoe. The cleaning shoe then effectively removes the deposit which is attached to the pipe itself.

Studs mounted on the bottom ripper plate and shoes are made of 5/16-inch steel ground to a chisel edge on the leading side.

Figure No. 2 presents a top, bottom, and side view of the assembled tool.

* * * * *

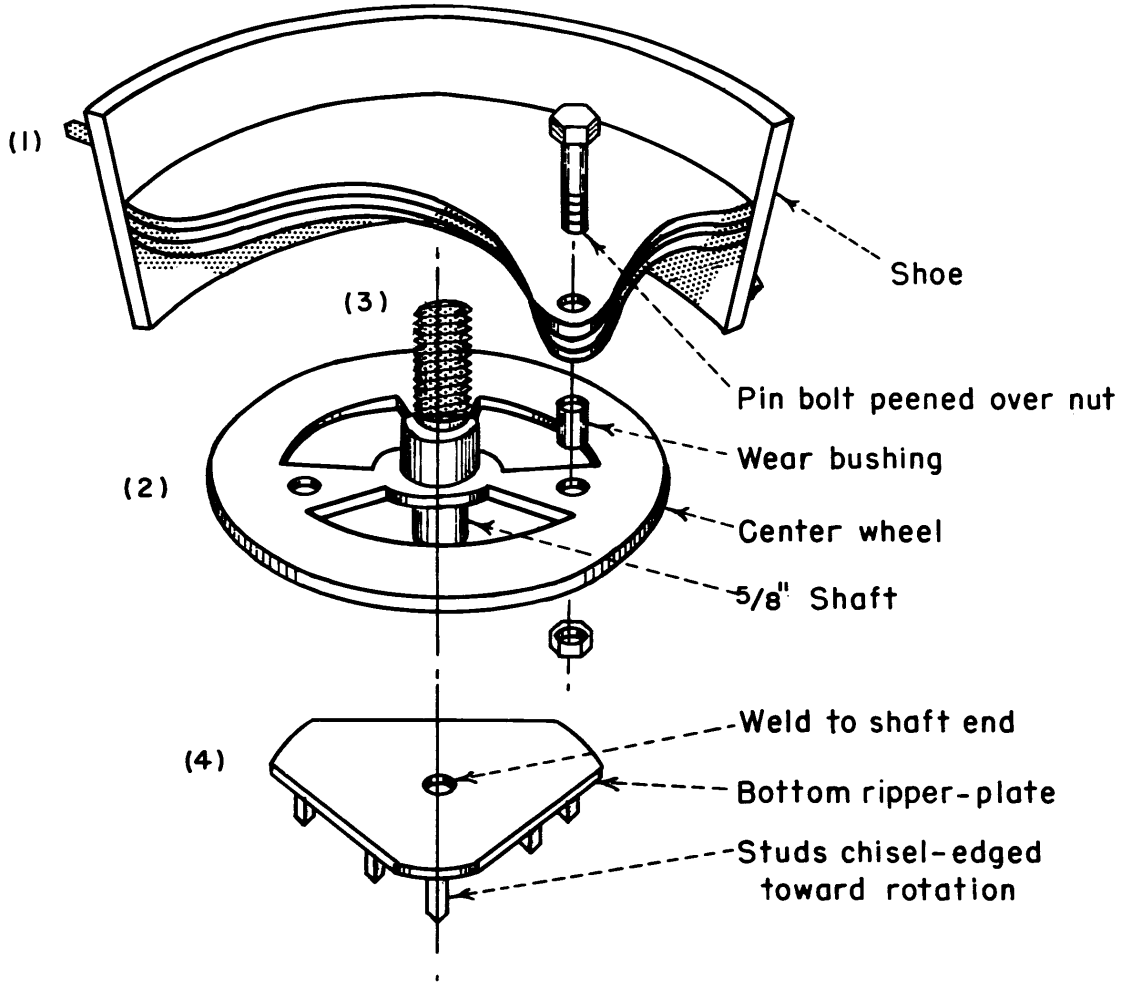

(Note : Two shoes omitted for clarity)

DRAIN CLEANER

DESIGN BY WILLIAM A. McLAUCHLIN

FIGURE I

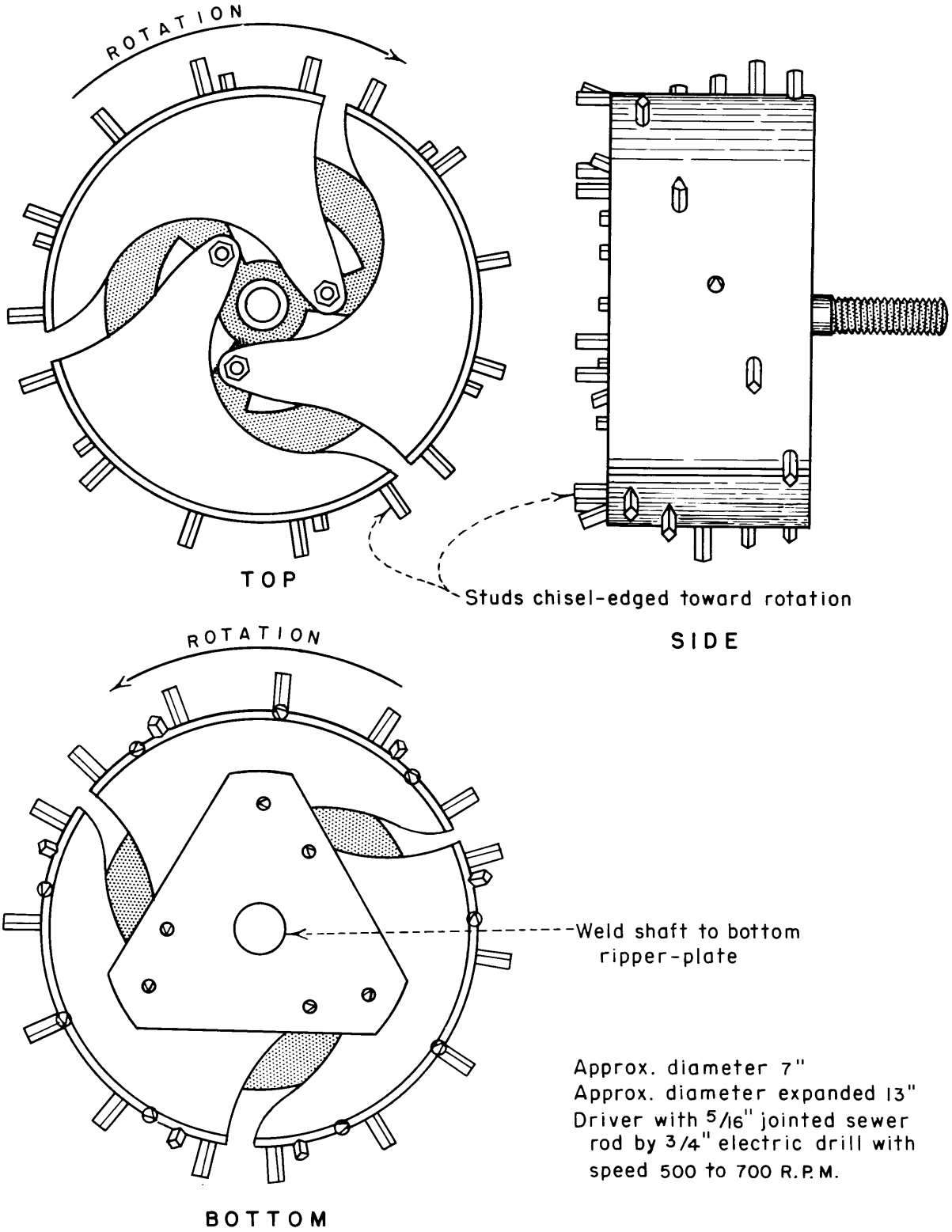

DRAIN CLEANER

DESIGN BY WILLIAM A. McLAUCHLIN

FIGURE 2

KEEPING THE BRUSH IN THE CAN

(Reprinted by permission of GRIST, July/August 1962 issue, a publication by the National Conference on State Parks, Washington, D.C.)

After you use a brush to apply contact cement or any other solution equally hard to remove, there seems little that can be done but to throw the brush away. Thomas K. Powell of the Hearst Historical Monument, San Simeon, California, has a better idea--he cuts the handle down sufficiently so that the brush may be kept right in the solution, inside the can with its lid on. Then the brush usually stays soft enough to be used again.

* * * * *

CONFUSING THE "STRONG ARM GUYS"

(Reprinted by permission of GRIST, July/August 1962 issue, a publication by the National Conference on State Parks, Washington, D.C.)

Flexing their muscles, the "strong arm guys" like to show off by bending park metal traffic signs around supporting posts, says Glen C. Farrar, Park Engineer at Colonial National Historical Park, Yorktown, Virginia. So Robert M. Fletcher, who maintains the signs at Colonial, suggested that solid backing be placed behind the thin metal. From then on, salvage plywood was cut the same size as each sign and placed behind it before mounting.

Now the Tarzan types seldom are able to twist the signs around. The very small cost in time and materials for backing up the signs is paying off by making sign straightening and replacement almost things of the past.

* * * * *

MOVABLE LAUNCHING RAMPS

(Reprinted from GRIST by permission, May/June, same as above.)

Don Sheldon, an engineer at Rocky Fork State Park in Ohio, suggests that army surplus landing mat makes a fine boat launching ramp in places where you do not want to make a permanent installation. Since the mats are composed of steel sections, they are easily handled by work crews.

Boating enthusiasts, bent upon getting their craft into the water in the shortest possible time, will often back their boat trailers down

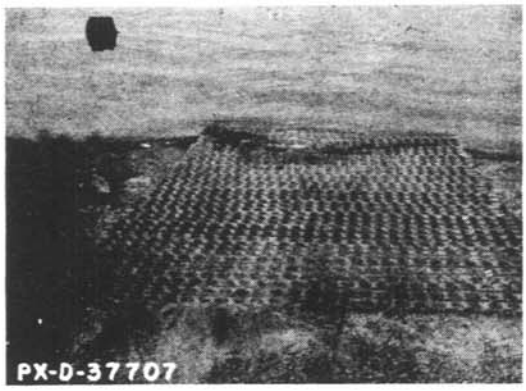

banks never prepared for, or intended to serve as, launching sites.

It is much better to provide mats at several points along the waterfront--at least until a more permanent launching area is provided--than to have the entire shoreline torn up.

* * * * *

PROPANE TORCH REST

(Reprinted by permission of GRIST, May/June 1962 issue, a publication by the National Conference on State Parks, Washington, D.C.)

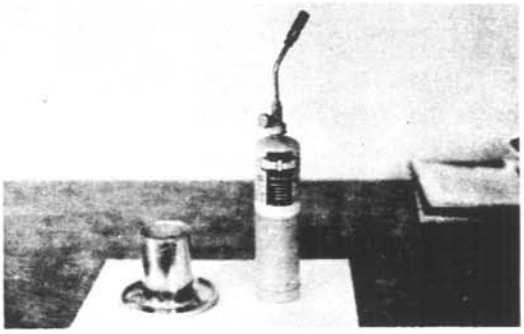

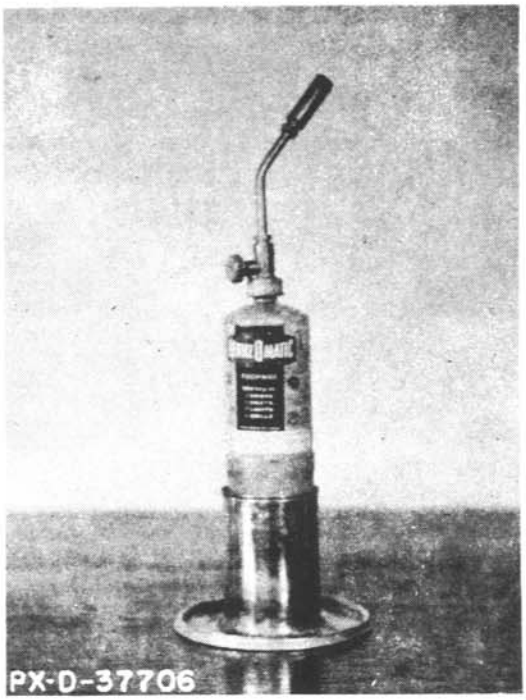

You are using a propane torch and right in the middle of the job you need to use both hands for the work. You look around for a level place to set the torch down, but by the time you find one the work is cold.

Irritated, you move to take hold of the torch, knock it over, burning or scorching a few conspicuous spots. Just a couple of times of that were enough for Herbert T. Hinton, Maintenance man, Tumacacori National Monument, Arizona. Herb soldered an empty tin can to a gallon paint can lid to make a stable rest for the torch as shown in the photographs at left.

* * * * *