CONTROL OF AQUATIC WEEDS

The Problem

Unretarded growth of aquatic weeds in lined canals can materially affect their carrying capacities. This is especially true during the hot summer months when the demand for water is the greatest and any interruption in service may mean costly crop losses.

Aquatic weed may consist of so-called mosses, algae, pondweed, and similar types of growths that occur primarily within the water prism of our waterways. Typical plants of this type are shown in Figure 130.

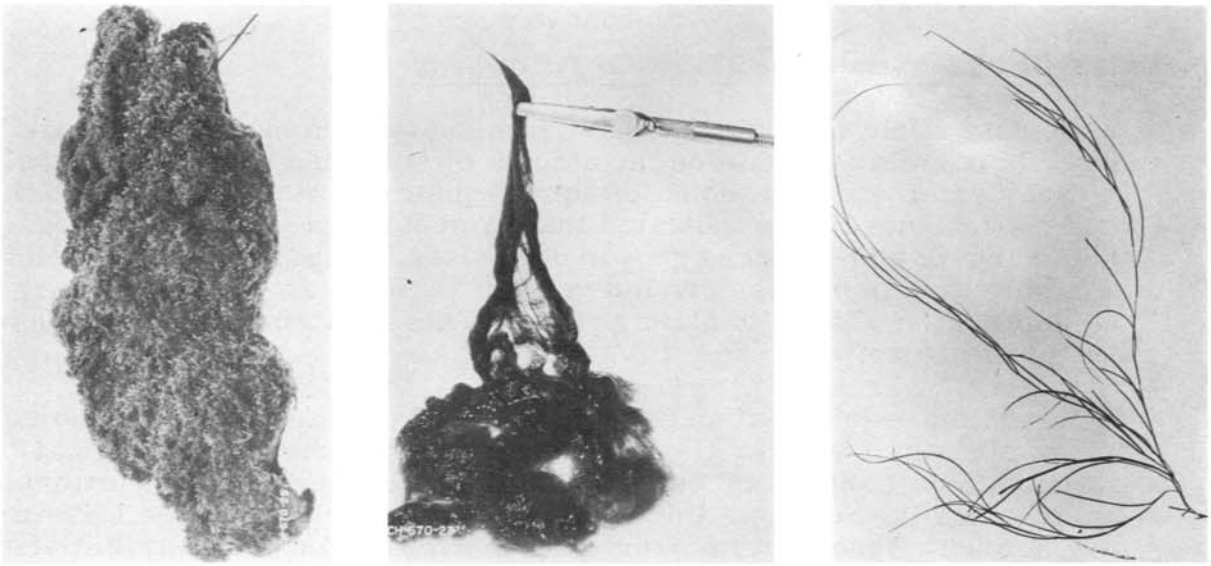

Moss Algae Sago Pondweed

Fig. 130

True moss may grow in water, but it is often found on shady banks at the waterline or above. Water channels in the United States are seldom infested to a degree necessary for control. In Australia and New Zealand, moss is a problem. Control methods have been developed there which are superior to mechanical scraping. Waters low in salts are most likely to contain moss. True moss has parts which strongly resemble stems and leaves.

Algae is often called moss, frog moss or green slime. The filamentous kinds, as shown, offer the most problems in irrigation systems. Prevention and control may be obtained by the use of copper sulfate, aromatic solvent, and other chemicals. Waters high in salts may require more chemicals than less salty water. Of the weedy algae in

fresh water only a few forms resemble land plants with stems and branches. Chara, a pondweed-like algae may often be found in irrigation channels. The plant has a gritty texture.

Pondweed, also called moss, water weed, ditch grass, and horsetail moss, is a rooted flowering plant. Sago pondweed is one of several flowering plants which are obligated to live in water, and which reduce the capacities of irrigation channels. These weeds must be prevented, controlled, or removed if the capacities of channels are to be maintained.

The control of aquatic weeds on irrigation projects is most effectively accomplished by the use of chemicals and equipment for dispensing them, or by the use of mechanical control methods. However, sediment in the canal water may be a deterrent to the growth of some types of aquatic weeds under some conditions.

Effects of Suspended Sediment on Pondweeds

In the past, field observations have frequently been made regarding a possible correlation between the amount of suspended sediment contained in canal water and the amount of aquatic plant growth in canals. Field observations have often indicated that as suspended sediment increases, the amount of aquatic weed growth decreases. Reports of observations reviewed have in no case given details of various factors contributing to suppression of aquatic plant growth. These statements have been of a general nature.

To obtain more information under controlled conditions on this subject, a joint study by the Weed Control Investigations Unit of the Physical Investigations Laboratory Section, Chemical Engineering Laboratory Branch, and the Sediment Investigations Unit of the Hydraulic Laboratory Branch, Bureau of Reclamation, Denver, Colorado, was initiated to determine shading effects of suspended sediment on aquatic weeds. The scope of the program consisted of determining the growth response of various species of submersed pondweeds exposed to environment of various concentrations of two types of suspended sediments.

Species of submersed pondweeds, commonly found in irrigation canals, were planted in pots and grown in drums containing a range of suspended sediment concentrations. Ungerminated plant propagules and established cultures of pondweeds were used in the study.

Two different sediments were used, one a commercial sodium-base montmorillonite-type bentonite, and the other a natural occurring bentonite-type sediment obtained from Angostura Reservoir.

Light quantity and spectral quality, penetrating the sediment-laden water, were measured by use of a limnophotometer which has a specially constructed photoelectric cell system. Light measurements indicated the intensity and spectral quality of sunlight were considerably changed upon penetration into water containing suspended sediment.

The sediment from Angostura Reservoir caused greater light reduction at lower concentrations than did the commercial bentonite.

When plants were exposed to reservoir sediment concentrations of 50 parts per million, the percent reduction of dry weight of plant material was approximately 33 percent less than the dry weight of plant material in the control drum. Reservoir sediment concentrations greater than 1,250 parts per million were not effective in producing additional significant growth reductions than that attained at the 1,250-parts-per-million level. The commercial bentonite sediment caused growth reductions of a similar trend but required greater concentrations than field sediment to produce similar effects.

Chemical Methods for Control of Aquatic Weeds

Copper Sulphate Treatment

The problem of algae growth in the Madera Canal on the Central Valley Project in California, is, no doubt, typical of conditions in many other canal systems. This canal is 36 miles long and has an initial capacity of 1,000 cubic feet per second. Only the first 7.7 miles is lined, and it is this lined section which is appreciably affected by algae growth. In past years (this part of the canal was placed in operation in 1945), before an effective schedule of treatment had been worked out, the capacity between treatments was occasionally reduced by as much as 29 percent. It has been determined that the most prevalent algae form present was "Ulothrix."

Early methods of treatment consisted of suspending "nut" size copper sulphate in burlap bags, in the canal as near the outlet valves of Friant Dam as possible. These treatments, at 7- to 10-day intervals, were frequently insufficient to restore the full capacity of the canal; and another treatment was required within 2 or 3 days. When the algae growth was far advanced, and the required dosage was in doubt, as many as 13 or 14 treatments were made each water season (usually 6 to 8 months long). Later experience, together with aid from the Bureau of Reclamation's Laboratory in Denver, Colorado, established that 2 pounds of copper sulphate to each second-foot of flow provided an optimum rate of application. Lesser amounts frequently proved insufficient, and the treatment had to be repeated. Heavier applications appeared unnecessary.

Other methods tried included: placing copper sulphate in solution before applying, the use of chlorinated lime, and the application of Rosin Amine D. acetate with a weed spray rig. Satisfactory control was achieved with these various chemicals but all required considerable time and labor to get these materials in solution.

The present method of application is to "slug" the canal with fine crystals of copper sulphate, dumped directly into the stilling basin at the head of the canal. The fine crystals dissolve rapidly and the turbulent

action in the stilling basin assures satisfactory diffusion throughout the entire cross section. The material is dumped at as uniform a rate as possible over a 15-minute period. Allowing an additional 5 minutes for total dissolution, the entire treatment covers a 20-minute period. Using 2 pounds per second-foot, a concentration of 26.6 parts per million for 20 minutes is achieved. This concentration usually results in restoring practically the full capacity of the canal within 24 hours. A treatment usually clears the entire lined section. However, in some systems it might be necessary to add additional material at 4- to 6-mile intervals to secure the best results.

The chemical is purchased in 20 and 100 pound bags to facilitate closer measurement of the material. The fine crystals dissolve faster than the "nut" or coarse grade, and are less irritating to skin and eyes of the operator than the powdered grade. In all, the fine crystals proved most satisfactory from all angles.

Only one man and a pickup truck are required for the operation. Each of the material bags is opened before the actual application begins, assuring no lost time or irregularity in the rate of application. This method has proven entirely satisfactory and the most economical of all methods tried.

A schedule of the optimum time between treatments has been worked out, based upon curves expressing the relationship between the discharge through the needle valves, discharging into the canal, and a gaging station located about a mile downstream from the dam. These curves are kept on a daily basis. When the recorder at the gaging station shows a 4- to 6-percent rise in the apparent canal flow, and the valve discharge has not been increased, a treatment is scheduled. Likewise a daily climb of 2 percent at the recorder (no increase having been made at the valves) usually indicates an application of copper sulphate is needed.

Treatments have been required most frequently during the warmer summer months. Over the past 3 years, four or five applications have sufficed for the months of June, July, and August, with two or three others spread over the spring and fall months.

Concentrations up to 35 parts per million have not killed fish in the canal. However, higher concentrations have been known to do so on certain species. This is a secondary consideration because no effort is being made to propagate or protect the fish. Fishing and hunting are not allowed along the canal right-of-way.

Fig. 131

In the application of nut-size crystals of copper sulfate to an earth section of East Low Canal, Columbia Basin Project, Washington. Copper sulfate is suspended in open mesh bags, Figure 131, so that the crystals will dissolve in 20 to 40 minutes for killing algae. If dumped onto earth canal bottoms those crystals which become embedded in silt may not dissolve for several hours or days.

A nylon net bag designed by Mr. Dean Schachterle, Agronomist, Kansas River Projects, McCook, Nebraska, is convenient to use and has a long life.

Copper sulfate dust should not be taken into the lungs or mouth, nor should the skin be exposed to the chemical at high concentrations for long periods of time. The copper sulfate bagging device shown in Figures 132 and 133 was constructed in the Quincy Irrigation Branch, Columbia Basin Project, Washington. With this device, copper sulfate may be placed in open mesh bags with very little dust and contact with the skin.

Fig. 132

Fig. 133

Antifouling Paints

Algae and naiad cocoons create a very troublesome problem on concrete flumes, tunnels, and siphons of the Black Canyon Canal, Boise Project, Idaho. The carrying capacity of the flumes particularly is seriously reduced because of the attachment of the algae and cocoons to the sides and bottom surfaces of the flumes. The infestation is usually heavier on rough concrete surfaces and less severe at points of high turbulence or high velocity flow of the water.

Several surface coatings have been applied to the concrete surfaces over the years to reduce the attachment of the foreign adherents; among these are CTP-3 paint, catalytically-blown asphalt, and antifouling paints. In addition to the proprietary paints and asphalt coatings, chemicals which inhibit or retard the growth of algae were mixed with CTP-3 paint. More recently, a roof has been placed over a short reach of one flume to determine the effect sunlight has on the algae.

Antifouling paints seems to inhibit the growth of the black-fly cocoons to some extent and, applied to the bench flume, it has given generally good results for periods up to 3 years. Whether this benefit can be attributed entirely to the paint or to the smoothness of the concrete surfaces over which the paint is applied has not been fully established.

Merely covering the flumes to reduce the light will not control black-fly activity. Actually, the cocoons appear in tunnels and siphons where there is virtually an absence of light. The heaviest infestation has been in a tunnel 9 miles from the head of the canal.

Covering the flumes definitely has some advantages. The antifouling paint in the shade of the roof was in much better condition than that exposed to direct sunlight. The condition of the paint with and without protection of the shed are illustrated in Figure 134. The smooth, adhering paint under the shed in the left illustration, had been in service

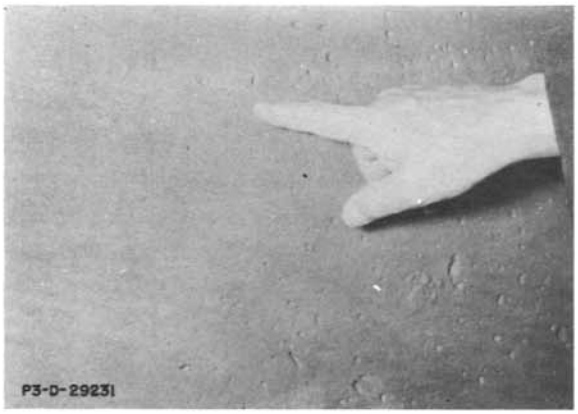

Fig. 134

two irrigation seasons. This is in sharp contrast to the scaling, peeling, and deteriorating surface shown at right that has been in service for a similar length of time, but exposed to the sunlight. An estimate of the annual cost of maintenance with the shed roof is close to that for more frequent painting.

It is estimated that the annual cost of painting is now $1.08 per linear foot of flume. The cost of the shed-type structure to cover the flume is estimated to cost $20.00 per linear foot. Some painting would have to be done under the sheds at about 6- to 7-year intervals. Interest on the investment would have to be added to the cost as well as the cost of maintenance. A distinct advantage, however, and an important one, is that the shed could be constructed during the winter and it would not be necessary to clean and paint the flumes during the rush period just before the start of the water season, when weather suitable for the painting operation permits. Preparations for repainting must include the removal of adhering algae and cocoons as well as loose deteriorated concrete and other foreign matter.

During the 1958 irrigation season, a considerable growth of algae formed on a Parshall flume on the Meeker-Driftwood Canal system, Missouri River Basin Project, Nebraska. The growth was so dense that it affected the rating of the flume used to measure water deliveries to the canal. Periodic applications of copper sulfate to the water in the canal helped kill some of the algae, but enough remained on the flume to affect the rating.

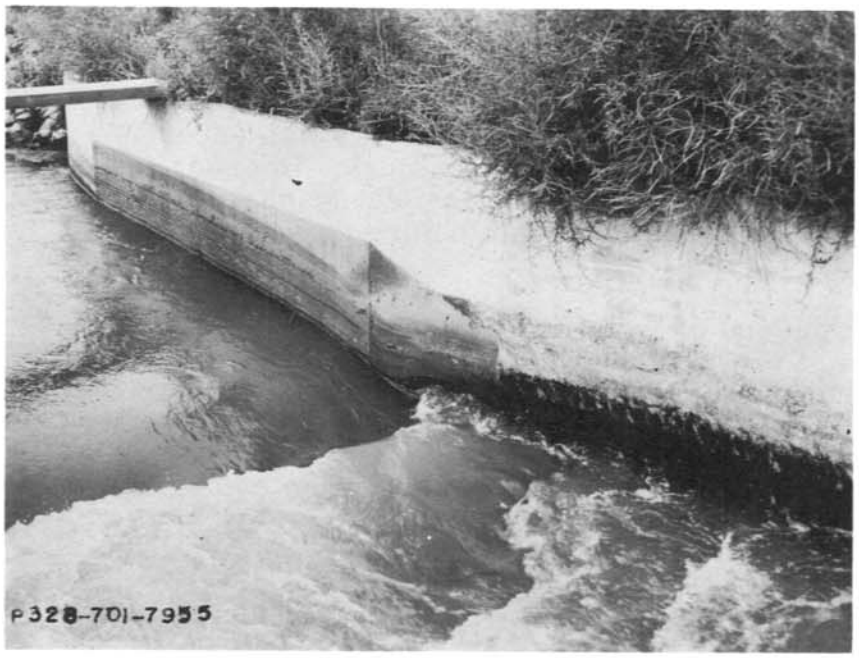

Fig. 135

Prior to the 1959 irrigation season, two coats of copper-base proprietory antifouling paint was applied to the throat of the 12-foot concrete Parshall flume, Figure 135. The result of this paint application was that the growth of algae in the throat of the flume during 1959 was negligible.

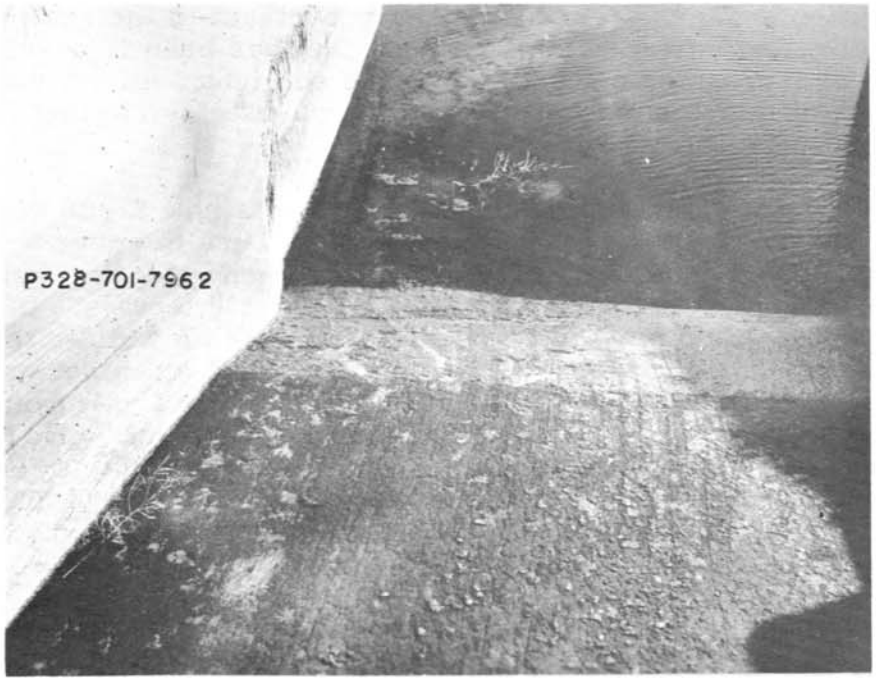

Fig. 136

Figure 135 is a view of the flume looking upstream showing the left side of the flume and the copper-base coating applied. Growth of algae on the side of the flume downstream from the painted throat is apparent.

Toward the end of the irrigation season there was evidence that some of the protective paint was wearing off. This was especially true of the bottom of the flume and the lower sides. In order for the algae protection to be maintained, the Project Manager believed the flume should be painted again before the next irrigation season.

Figure 136, taken at the end of the irrigation season, shows the downstream section of the treated Parshall flume and the untreated section below the flume throat. In the untreated area, long strings of algae growth are visible while there is practically no algae in the treated section. The treated bottom has a very thin layer of algae and much of the paint had started to wear. Also evident are areas of loss of protective paint at the bottom of the sides of the flume.

The cost in 1959 of applying a total of 2-1/2 gallons of the copper-base antifouling paint in two coats was approximately $63.00. The cost as estimated by maintenance personnel is broken down as follows:

Labor and transportation of labor	$35.00
2-1/2 gallons of paint at $9.62	24.00
Muriatic acid (surface preparation of concrete)	3.00
Broom	1.00
Total	$63.00

The paint used contained 14.7 percent active ingredients expressed as metallic copper, and 85.3 percent inert ingredients. A source of the paint may be obtained by writing the Office of Assistant Commissioner and Chief Engineer, U.S. Bureau of Reclamation, Building 53, Denver Federal Center, Denver 25, Colorado, Attention: D-400.

Aromatic Solvents

The use of aromatic solvents in the control of aquatic-type weeds has received widespread acceptance and in the following few pages of this section of the bulletin equipment for the handling, mixing, and storage of these solvents is discussed.

The essential components of a piece of equipment for the transporting and field application of aromatic solvents are embodied in the trailer-mounted equipment shown in Figures 137 and 138,

Fig. 137

Fig. 138

developed by personnel of the Michaud Flats Project, Idaho. The equipment includes the tank, trailer, pump, and related equipment essential for transporting and applying xylene for pondweed control.

A typical arrangement of pumping units and accessories for handling chemical weed control materials is shown on the diagram, Figure 139. Estimated cost of the component parts and their fabrication into a satisfactory application unit is about $400.00. Incorporated in the unit are:

1 pump unit
20 feet of 2-inch-diameter suction hose Neoprene lined with adapters
20 feet of 2-inch-diameter discharge hose Neoprene lined with adapters
15 feet of 3/4-inch, 75-pounds-per-square-inch, plastic hose with adapters and union
1 each gate valve, close nipple, and 2- x 2- x 4-inch tee

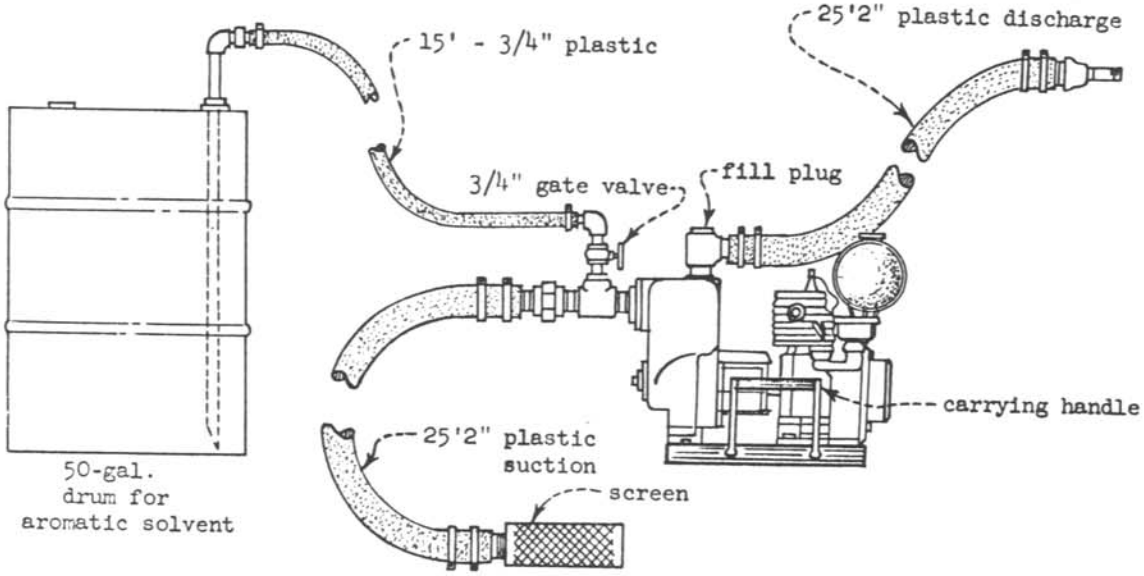

Fig. 139

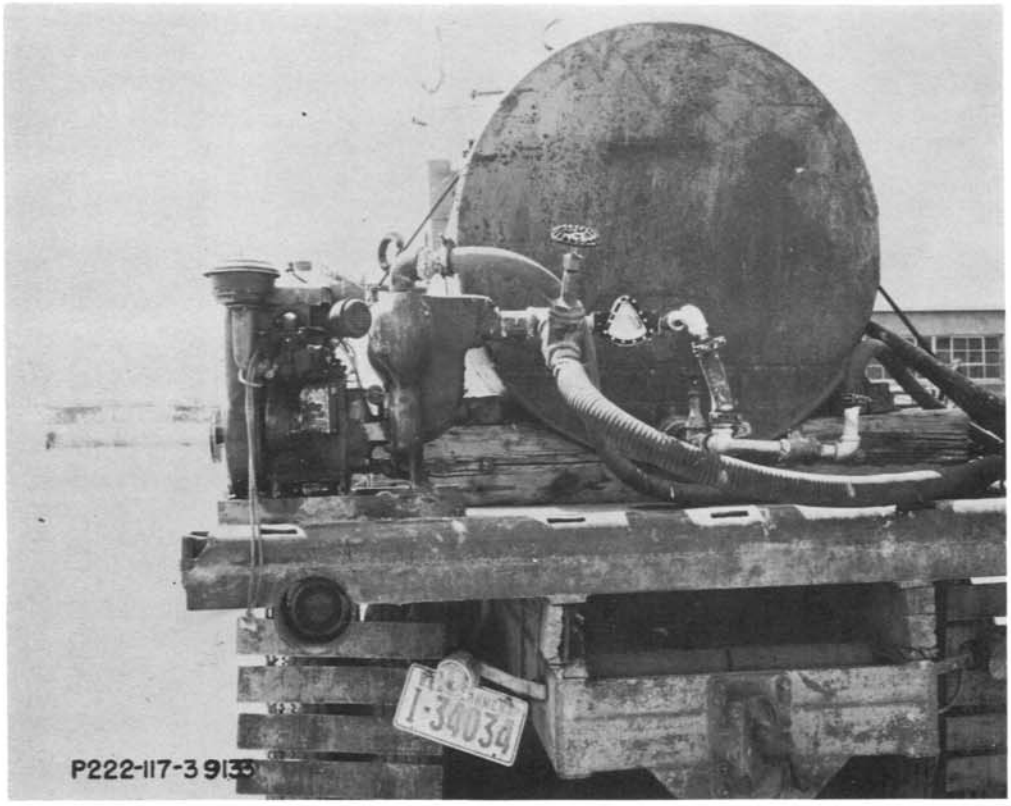

Fig. 140

The arrangement of a somewhat larger truck-mounted tank and accessory equipment used on the Columbia Basin Project, Washington, is shown in Figure 140.

The assembly of apparatus for the illustrated unit is as shown in the sketch, Figure 141.

Truck-mounted aromatic solvent application equipment devised by the Kennewick Irrigation District, Kennewick, Washington, is shown in Figure 142. The tank and metering device were obtained from an oil delivery tank truck. The pump intake and outlet lines are black semiflexible polyethylene tubing. The cost of the tubing is much less than the more flexible hoses, is resistant to the aromatic solvent, light in weight and may be used for suction as well as discharge lines. The tubing becomes less flexible during cold weather, but this is not a problem since aromatic solvent is seldom applied when the air temperature is less than 70° F.

In applying aromatic solvent to control submersed water weeds, it is recommended the concentrated solvent be introduced at a drop structure so that the turbulence of the water will effect good mixing. Naturally, ideal conditions for mixing chemical with the water do not exist at every point where introductions are to be made, so

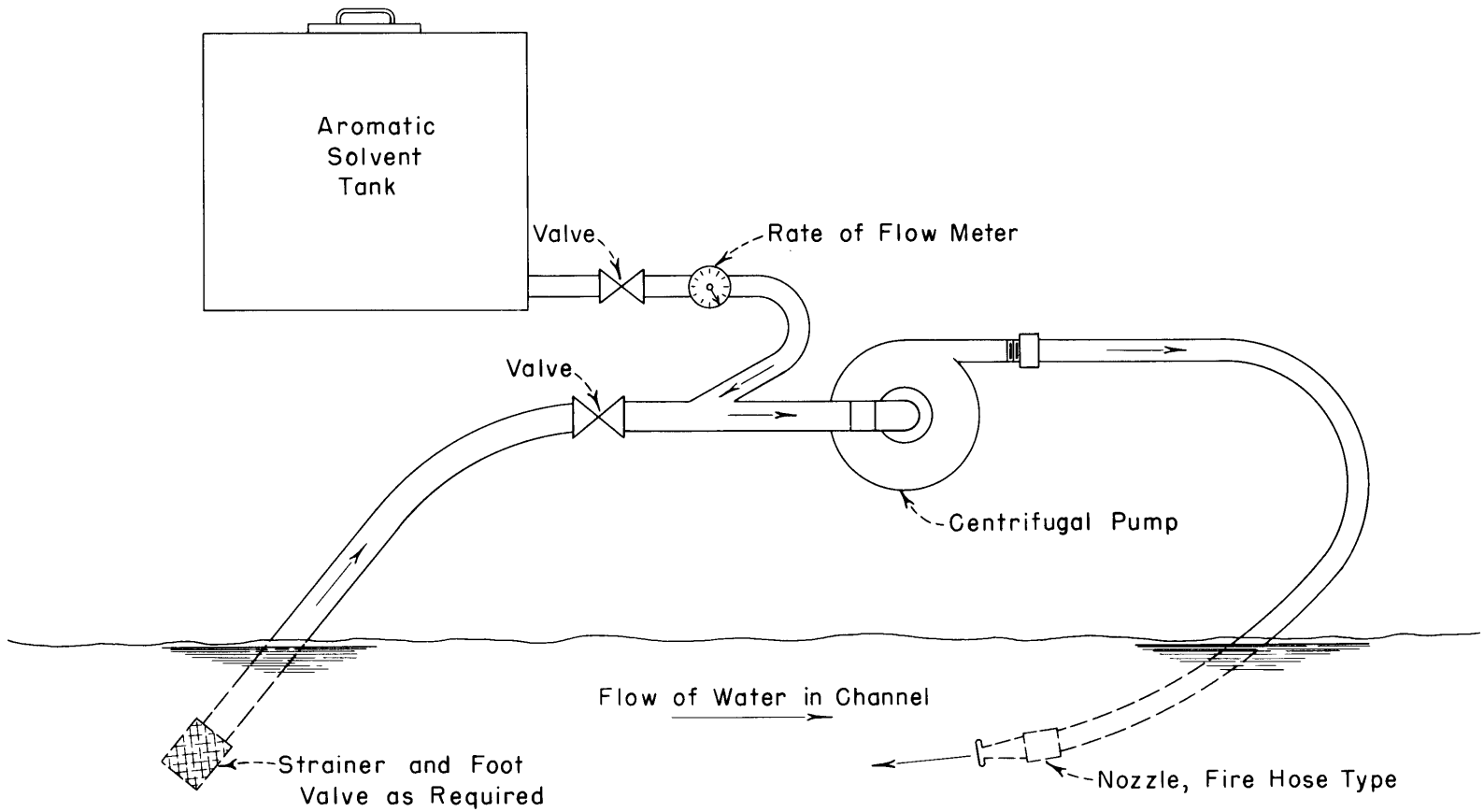

DIAGRAM FOR ASSEMBLY OF TRUCK MOUNTED APPARATUS
FOR APPLYING AROMATIC SOLVENT IN IRRIGATION
CHANNELS FOR CONTROL OF AQUATIC WEEDS

Fig. 141

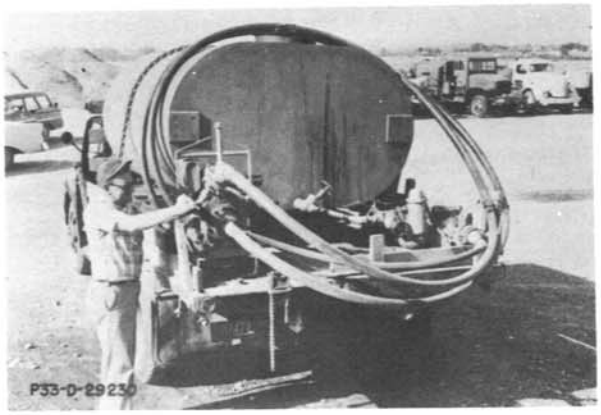

Fig. 142

other means such as compressed air, stirring the water with paddles, and mixing of the chemical in a pumping unit have been investigated. A practical preintroduction technique of assuring dispersal of aromatic solvent has been developed and used by personnel of the Sunnyside Valley Irrigation District, Sunnyside, Washington, as illustrated in Figure 143. The method of mixing is referred to in that area as the "Sunvalid Solvent System."

The mixing of solvent with water before it is introduced into the canal eliminates the necessity for nozzles. It also assures thorough dispersion of chemical in the first few hundred feet downstream from the introduction point which so often is difficult to obtain when nozzles are used.

The unit consists of a 4-inch centrifugal pump with intake lines to both the reservoir of chemical and to the lateral. Violent mixing of chemical and water is accomplished in the bell casing of the pump before fluid is discharged back into the lateral.

Fig. 143

The intake line to the drum of chemical as illustrated in the diagram, Figure 144, is fitted with a valve which controls the volume of concentration entering the pump. This particular unit has been used to apply chemical to ditches having a capacity ranging from 3 to 125 cubic feet per second. The rate of application recommended for controlling submersed aquatic weeds is 6 to 10 gallons of chemical for each cubic foot per second of water over a 30-minute period.

On other projects, mixing units similar to the one described are used which do not draw chemical from a barrel but the pumps are connected directly to a gasoline meter on the reservoir tank. The quantity of aromatic solvent is metered and by checking the volume against time and waterflow, the chemical concentration built up in the ditch can be determined.

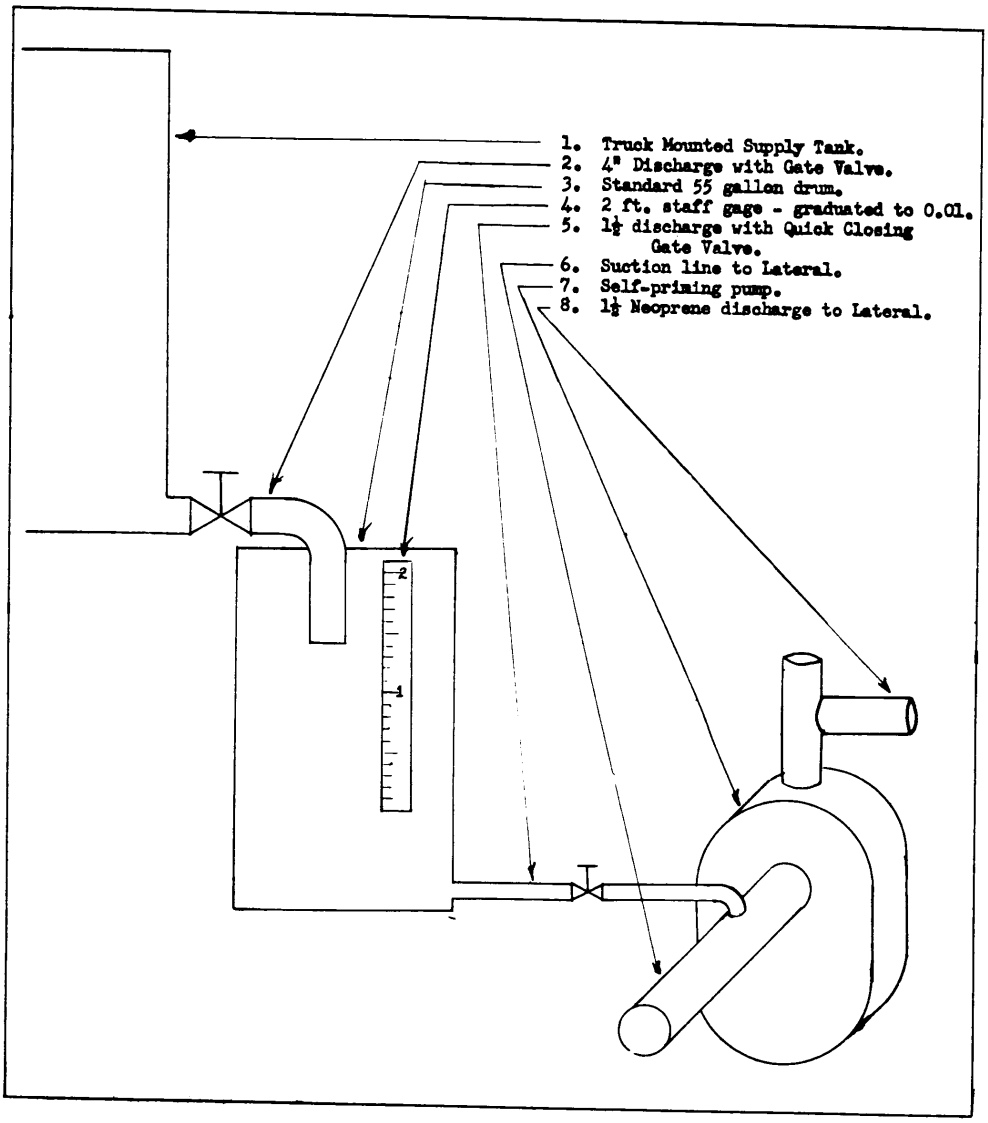

Fig. 144

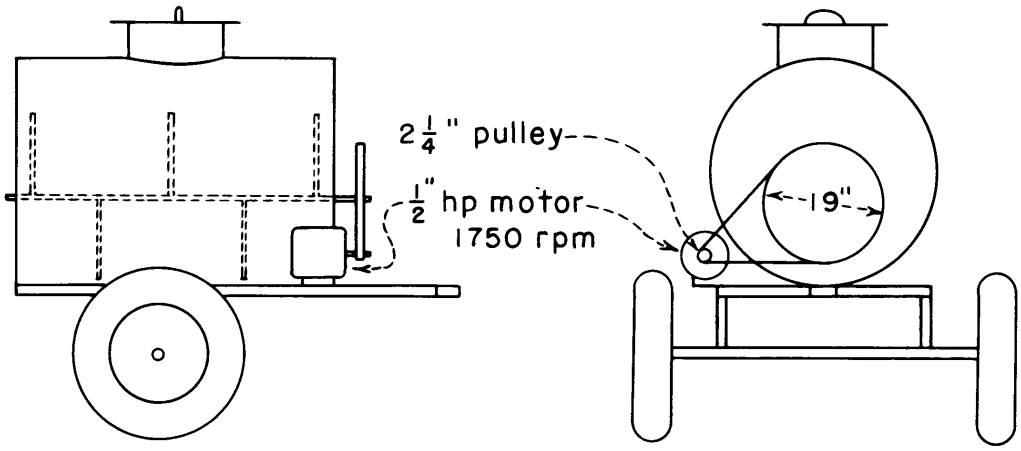

EMULSIFIER AGITATION TANK
275 GALLONS

Fig. 145

An emulsifier agitation tank, shown diagrammatically in Figure 145, is used by the Big Wood Canal Company, Shoshone, Idaho, in the application of solvents to canals and laterals.

Metering Aromatic Solvents

Aromatic solvent can be measured as it is applied to delivery and disposal channels by adding the chemical to the suction side of a 1-1/2- or 2-inch (input) centrifugal pump. The pump circulates water from and to the waterway. This method in common use on projects in the northwestern part of the United States is facilitated by installation of a rate of flowmeter which gives a direct reading in gallons per minute.

For example, if the rate of application of aromatic solvent is 10 gallons per cubic feet per second over a 30-minute period and the measured flow in the lateral is 14 cubic feet per second, 140 gallons of aromatic solvent should be applied. A uniform flow of 4-2/3 gallons per minute of the solvent is desired.

On the Columbia Basin Project, a deflection-type meter is installed in the aromatic solvent delivery pipe. The flow of aromatic solvent is regulated by a valve until the meter reads the desired rate of flow. A meter of this type is shown in Figure 140.

This particular meter is calibrated for xylene at rates of 3 to 15 gallons per minute. The same meter will measure larger flows if placed in bypass position with dial scales made to correspond with the calibration of the hookup.

The meter scale should be recalibrated for each type of liquid metered if there is a wide difference in velocity or a specific gravity difference of 0.15 or more. Rates of flow smaller than 3 gallons per minute can be measured by a smaller meter.

Deflection type of meters are inexpensive (cost, less than $60), may be mounted in any position, have one moving part, and can be obtained in aluminum, bronze, or other noncorrosive materials.

Storage of Herbicides

Storage of weed control materials offer few problems other than those encountered with other materials required for operation and maintenance of the irrigation system. Costs may be reduced as the quantities required become large enough for bulk storage, especially the storage of liquids, but aromatic solvents, acrolein, oils, sodium chlorate and other inflammable materials have specific storage requirements.

A few herbicides, such as dinitro, are highly toxic to humans and animals, when taken internally. Most herbicides are low in flammability and have a very low toxicity to animal life. They may have an extremely high toxicity to plantlife. Many herbicides are toxic to fish and to fishfood organisms. Several herbicides especially those containing chlorinated phenol components provide a long lasting odor and taste to water used for domestic purposes.

The aromatic solvents, xylene, acrolein and solvents employed as liquid carriers in some herbicides may be highly toxic in closed rooms under conditions which would expose humans to fairly high concentrations in the air, or, in the case of some of these materials, to low concentration for a long period of time.

Few weed chemicals are highly acid or alkaline, or strongly irritating to the skin on short contact, unless in concentrated form. Diluted forms may be a source of irritation if left in contact with the skin for several hours. Susceptible individuals may show allergic reactions on one or more herbicides. The diagnosis and treatment of these conditions are medical problems.

Copper sulfate in solution in water is highly corrosive on metal containers and parts and the aromatic solvents accelerate the disintegration of natural rubber and paints.

Storage Criteria

Good housekeeping, plus a definite consideration of the storage and handling requirements of chemicals used in the control of aquatic weeds, will prevent accidents. A herbicide storage structure and its equipment should:

1. Accommodate the quantity of herbicide which can be delivered, and safely retain it until it can be used over a practical length of time.

2. Provide means for taking the herbicide from storage in a clean and rapid manner.

3. Provide means for measuring the material into and out of storage.

4. Not present a hazard to the community in the event of fire, collision, or other extraordinary circumstances. Such a hazard might be air pollution, water pollution, or a long-term odor nuisance.

5. Conform with the safety requirements of the local government.

Bulk Storage

Bulk storage of fluids and flowable herbicides is feasible where a large quantity is used, where the storage can be near the point of use, where the disposition of many small containers is a problem, and where the herbicide may be obtained at a lower price in bulk than in small containers. By the use of bulk storage and pool purchasing, the cost of aromatic solvents or xylene have been cut 50 percent.

Storage tanks for aromatic solvents, weed oils, and 2,4-D are best constructed above ground for delivery by gravity, so that no pump or electrical installation is required, so that inspection of the tank for leaks is a simple procedure, and so that the tank may be cleaned readily. Such a tank used by the Big Wood Company, Shoshone, Idaho, is shown in Figure 146.

If underground installations are required to satisfy local regulations, to prevent a hazard or nuisance to the community or to save space, precautions should be taken against rust and electrolytic corrosion. A means of checking and cleaning the inside of the tank should be provided.

Pumps, meters, piping, hose, and other equipment used at storage sites in the filling of transporting equipment should be made of materials resistant to corrosion by the herbicide. The tank construction should be such that galvanic activity will not take place

between dissimilar metals in a medium which will conduct an electric current.

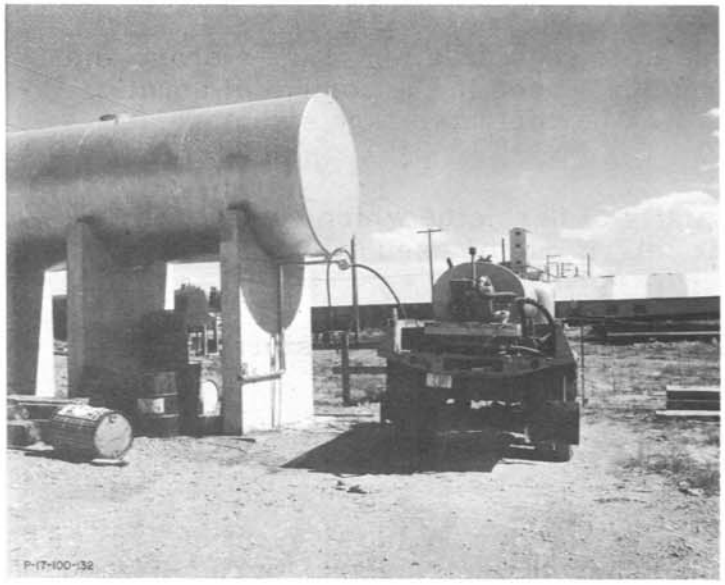

Fig. 146

Reasonable precautions should be taken to install tanks where the herbicide will not escape into a groundwater or surface-water supply in the event of tank leakage.

Typical of the storage tanks in use for the bulk storage of xylene in Region 1 of the Bureau of Reclamation is one having a size shown in the sketch, Figure 147.

A 3,000-gallon bulk storage weed oil tank on the Delta-Mendota Canal of the Central Valley Project, California, is shown in Figure 148. Where oil is a large part of the spray mixture, the supply should be near the point of use. This tank is on the canal right-of-way, and is protected by a good quality woven-wire fence.

The use of aromatic solvents in large quantities on the Columbia Basin Project, Washington, requires that several thousand gallons be stored. Four 10,000-gallon tanks have been located at Branch headquarters on the project to be near the expected locations at which the chemicals will be used. Underground storage was required in the urban area because of local fire regulations.

Typical of the Columbia Basin Project installations is that shown in Figure 149. A 10,000-gallon tank for the storage of the aromatic solvent is located adjacent to the corner of the building at upper right. Storage of 1,000 gallons of 2,4-D is provided for in a tank at left center, and a "high-volume" hydrant at lower left is used for filling sprayer tanks during the irrigation season. Manholes were installed for access to the tanks in case special cleaning procedures were required. Each of the storage centers cost about $2,500 to construct. This will be offset in less than 4 years from savings possible by purchase of the weed control materials in large volumes.

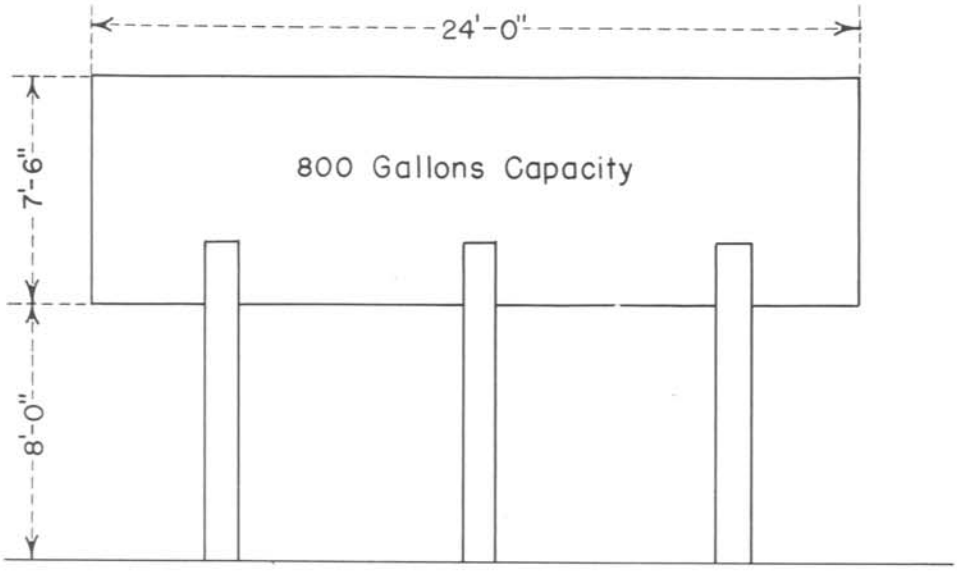

BULK STORAGE TANK FOR XYLENE

Fig. 147

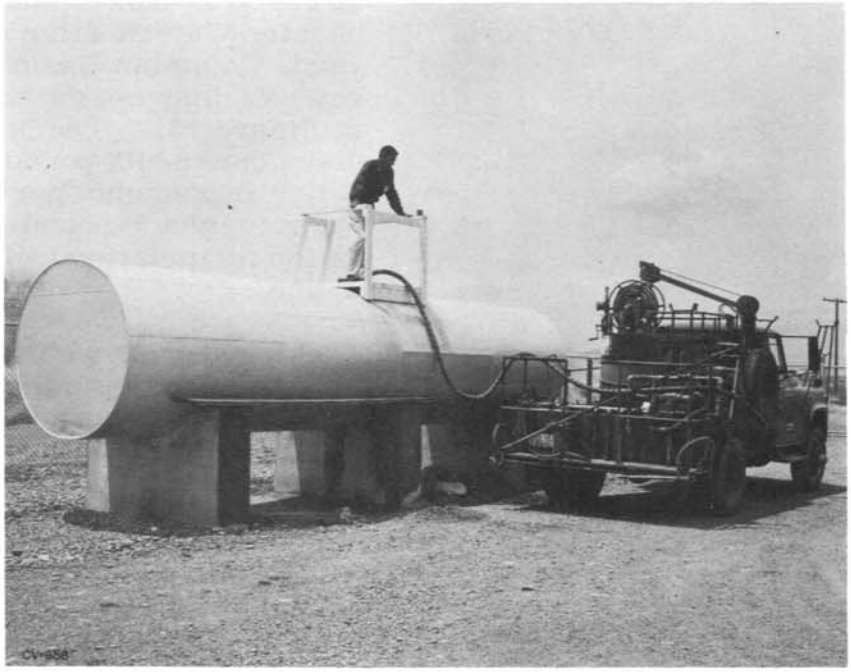

Fig. 148

Fig. 149

More details of a typical filling station for aromatic solvent on the Columbia Basin Project is shown in Figure 150. The electrical centrifugal pump provides for the delivery of 50 gallons per minute to transport and application tanks.

Accessories at the filling station include a totalizing meter, and a batch dial which can be reset to zero. Filler valve has an automatic shutoff, similar to those in use at gasoline service pumps. Small pipe at hose connection to pump permits draining of hose into air vent pipe at left.

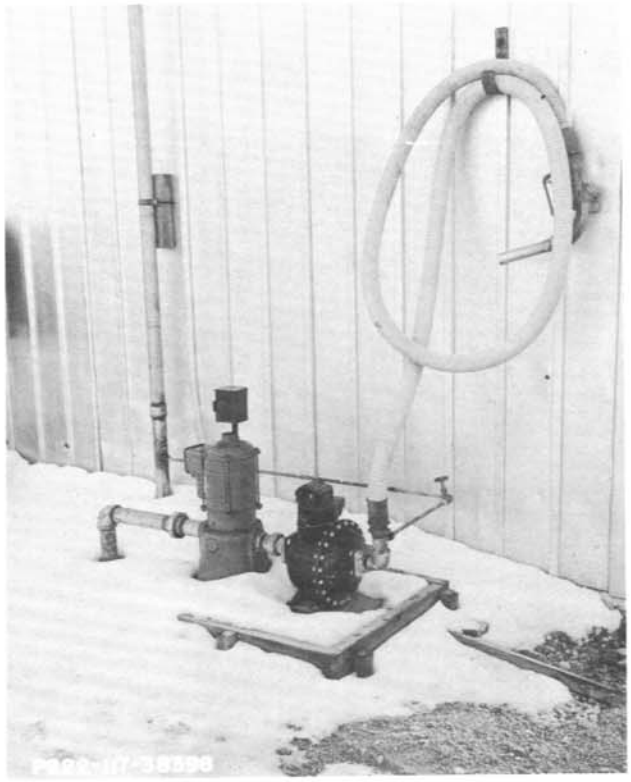

Fig. 150

Delivery of 1,000 gallons of 2,4-D in bulk at the Winchester Watermaster storage yard, Columbia Basin Project, Washington, is shown in Figure 151. The herbicide contained 6 pounds of active ingredients per gallon. Previously a 4-pound-per-gallon formulation had been in use.

The 1,000-gallon buried tank filled with the 6-pound 2,4-D had the capacity of 30 nonreturnable steel barrels; sufficient for one full season's spraying.

A hand pump capable of supplying 12 gallons per minute, and a meter is shown on the pedestal at the center of the illustration.