## Portable Mist Sprayer

A motor-driven mist sprayer adapted for local application of insecticides such as for mosquito control is shown in Figure 99. Use of equipment of this type may replace handwork in areas inaccessible to wheeled or track type vehicles, and on sites so located that drift of a highly concentrated herbicide on to adjacent crops or other valuable plants is not a factor.

Fig. 99

## Hand Spray Shield

The light-weight shield for use on a hand-boom when spraying various weed control materials shown in Figures 100 and 101, was fabricated by project forces on the Central Valley Project, California.

The shield reduces the drift of weed control materials by excluding the wind from part of the spray fan. It is particularly adapted for use in spraying weed oils under overhanging branches of shrubs and trees. The shield effectively prevents the branches from being sprayed by the drifting weed control material.

Fig. 100

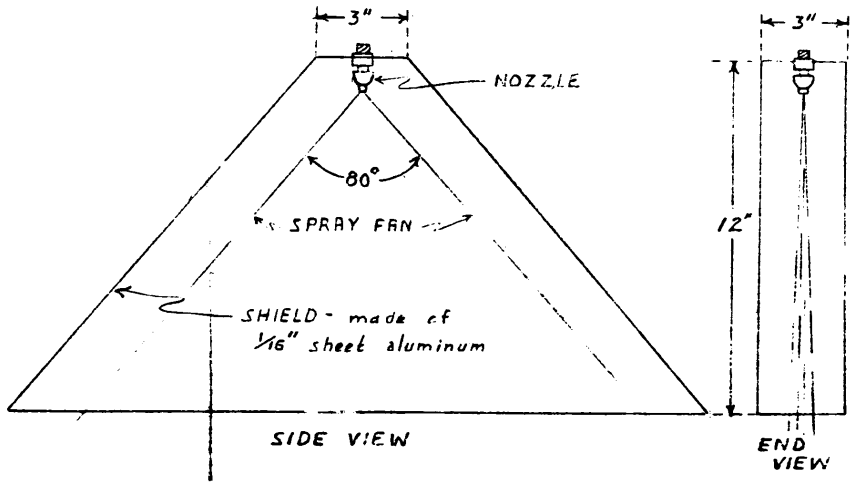


Fig. 101

Special Sprayers

A great deal of testing of herbicides on land weeds is done by the State Universities, the State Agricultural Extension Service, or Branches of the U. S. Department of Agriculture. Where these data are not available, or do not apply it may be necessary for irrigation projects to participate in trials which reflect the local weed, soil, and climatic conditions.

No chemical formulation is likely to kill a given weed with a given formulation and dosage under all environments. Best use of the chemical demands that knowledge be obtained from local trials.

Where such trials can be made by local representatives of the agricultural agencies, or in cooperation with them, the logarithmic sprayer, Figure 102, is useful and saves time in application and evaluation of trials.

First, all the dosages (amount of chemical per acre) may be applied in one continuous swath. Second, the exact dosage for a given section of the plot can be calculated by measuring from one end of the swath. Third, the subdivision of dosage is infinite. For example, 2,4-D may be applied at a dosage range of 1 ounce to 40 pounds per acre in mixed vegetation. Results may range from no damage to complete kill of all the vegetation, including various points of selective control. The dosage can be calculated at any of these points.

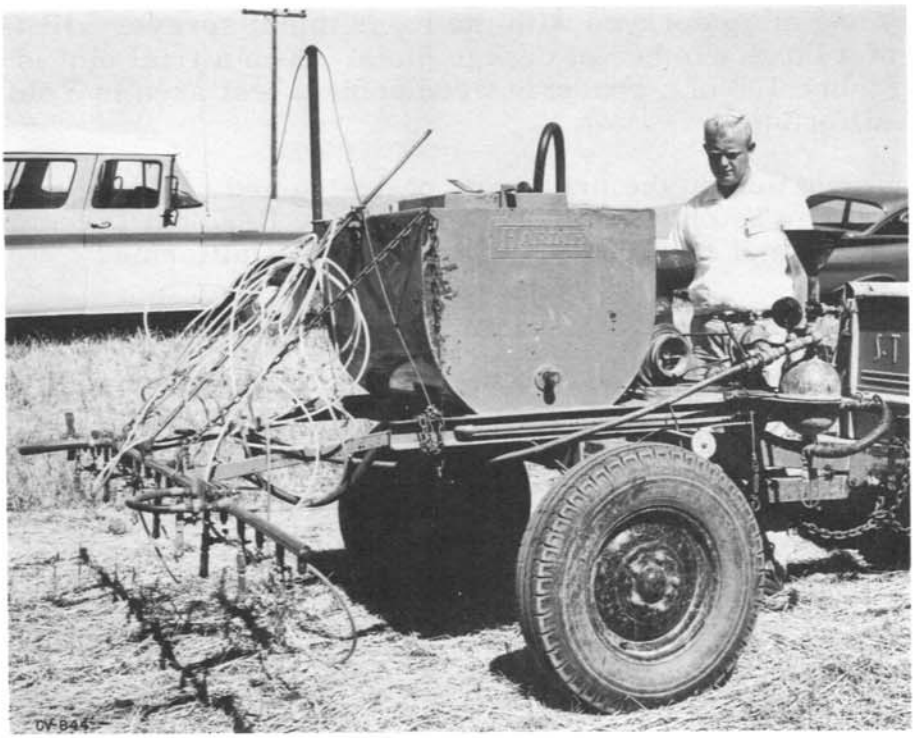


Fig. 102

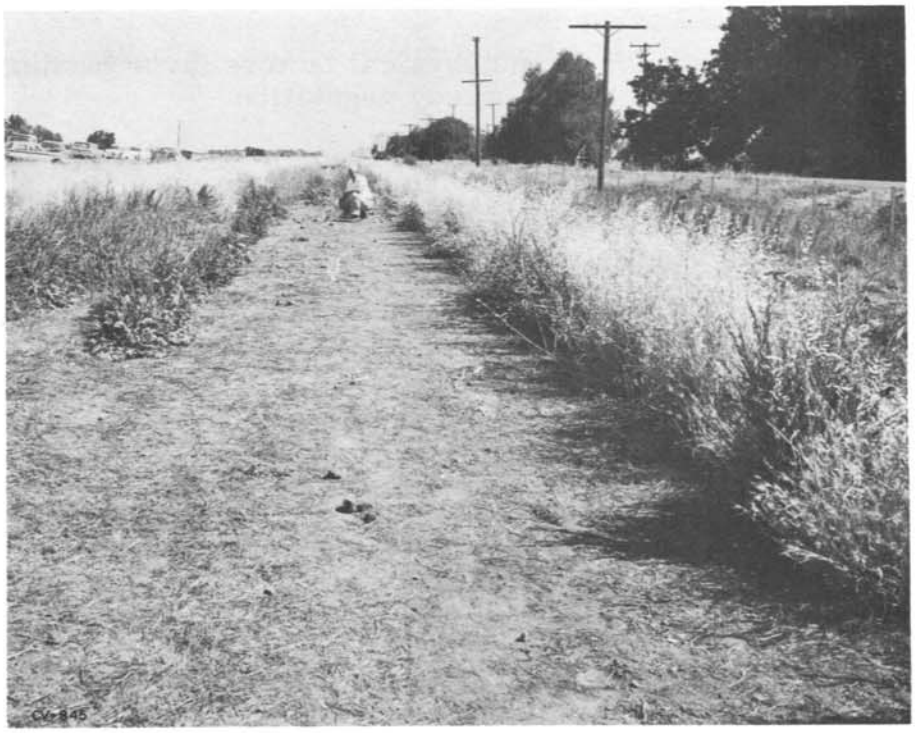


Fig. 103

In this way one strip sprayed with the logarithmic sprayer will take the place of a large number of dosage plots. Such a trial plot is shown in Figure 103 of a roadside weed control test area in Yolo County, California.

Further information on the principles of design and construction of this sprayer may be obtained by addressing the Regional Director, Region 2, Bureau of Reclamation, Sacramento, California.

## Burning Equipment for Control of Land Weeds

Weed burning may be divided into two phases: (1) that of control which involves the burning of green weeds during the growing season, and (2) that of disposal which involves the burning of dry weeds, before and after the irrigation season, or at any time of the year. Because the heaviest use of burning equipment is in those areas of green weed control, the burning of dry weeds will be treated in the third section of this release, as a weed disposal practice.

Weed burning is a major weed control practice in those geographic areas which have one or more of the following problems:

1. Non-weedy grasses are difficult to establish, as competition to weeds.

2. Effective herbicides are not available, are too expensive, or are prohibited because of hazard to crops.

3. The combined economic and physical factors favor burning over the cost of change to non-weedy vegetation.

### The Problem

Weed burning requires fuel, manpower, and somewhat specialized equipment. Burning usually requires more travel over the rights-of-way than spraying of the hormone-like herbicides. Where burning is feasible, equipment, fuel, and manpower must be available at a reasonable cost.

Irrigation season burning which may cause ground fires on dry rangeland in some areas, would not be a limiting factor on a fully developed irrigation project which surrounds the canals and laterals. The most important problem is in the design of mechanical devices suitable for putting the flame where the weeds are. Long reaches

and steep slopes are the same problems encountered in spraying. Access to the rights-of-way are even more important than in spraying. Retention of heat on the weeds is difficult. Covers like those used in flame cultivation are usually too cumbersome for irrigation system burners.

Equipment Types

Liquified petroleum gases (L. P. gases) such as butane, propane, and mixtures of the two, are supplied under pressure in tanks. Pressures up to 200 pounds per square inch are involved. Regulators are provided to supply the fuels in the gaseous or liquid form at a pressure suitable for the particular type of burner. No pumps are required. Pilot lights may be readily attached for remote ignition of the burners.

Fuel oils do not require pressurized tanks, but do require pressure, as from a pump. Certain burners are preheated to burn the oil in its gaseous form. Others burn with an oily residue which may have a toxic effect on plants. Still other fuel oil burners depend on atomization or spraying of the oil in a fine mist prior to ignition. A recent adaptation of this method incorporates a blower to add air to the atomized and ignited oil.

Liquid Gas Weed Burners

In the past few years, an effective burning program for weed control has been put in operation by Region 5 of the Bureau of Reclamation, on six projects in New Mexico and Texas. This was brought about by the introduction and availability of liquid gas, particularly butane and propane. Although other methods of grass control in distribution systems are effective, burning still has a place in the routine weed control program. This is more applicable since liquid gas burners, mounted on both trucks and tractors, have been developed.

Several important and beneficial features have been incorporated into the burners used in Region 5, shown and described on the following pages. These features include:

1. Vaporization of liquid at the burner;

2. Swinging of booms so that the truck may traverse either bank of a canal; and

3. Cables or hydraulic means to raise and lower the burners so that they can be kept in the most effective burning position.

Vaporization of the liquid at the burners eliminates special heat exchangers which are dangerous, expensive, and burdensome. Many of the burners used on the equipment described were designed and fabricated on the several projects by project personnel. They may be mounted in clusters on the burner bars. The bars, usually, are mounted on black standard pipe which in turn telescopes over smaller pipe attached to the boom. The bars can be moved away from or pulled closer to the truck and can be raised or lowered hydraulically or by the use of cables, pulleys, and cranks, generally by one man.

The burner heads for many of the burners were constructed of old boiler flues; however, the most durable are constructed of seamless steel tubing. A heat generating burner head is desirable and probably the most efficient, however, is not a necessity, as liquid gas will burn without producing much smoke, even when released through an open jet nozzle.

With a swinging boom, the truck can move on either bank of the canal while burning, the burners can be swung to the rear of the truck when burning the top of the canal bank, or the boom can be swung to a forward position when moving from one location to another. Burning weeds in a canal with an operating road on only one side is made more convenient and effective and wind conditions can be tolerated, by proper manipulation of the boom.

In order to burn canals having variable distances from the roadbed to the waterline, most of the burners shown have easily adjustable burner bars, which can be controlled from the operator's seat and can be maintained in the proper burning position at all times.

The butane weed burner shown in Figure 104 is a little more elaborate than the usual burner of this type in use. The weed burner shown was constructed and is owned and operated by a custom-burning contractor in El Paso, Texas. The owner contracts to burn weeds from ditches on a portion of the Bureau of Reclamation constructed Rio Grande Project. This arrangement has been in effect since 1949. The cost of burning with this and similar rigs in 1956 averaged about $17.00 per mile for one canal bank and $26.00 per mile where both banks have been burned.

There are differences in the design and construction of booms and mountings, which reflect the ideas of the several builders. The booms may be either manually or hydraulically controlled and are in general 25 to 30 feet in length. There are usually counterbalanced for ease of manipulation. The manually controlled boom, such as that shown in Figure 105, is mounted on a turntable, which permits operations from one side of the truck to the other from the rear of the truck bed. The weeds in a small

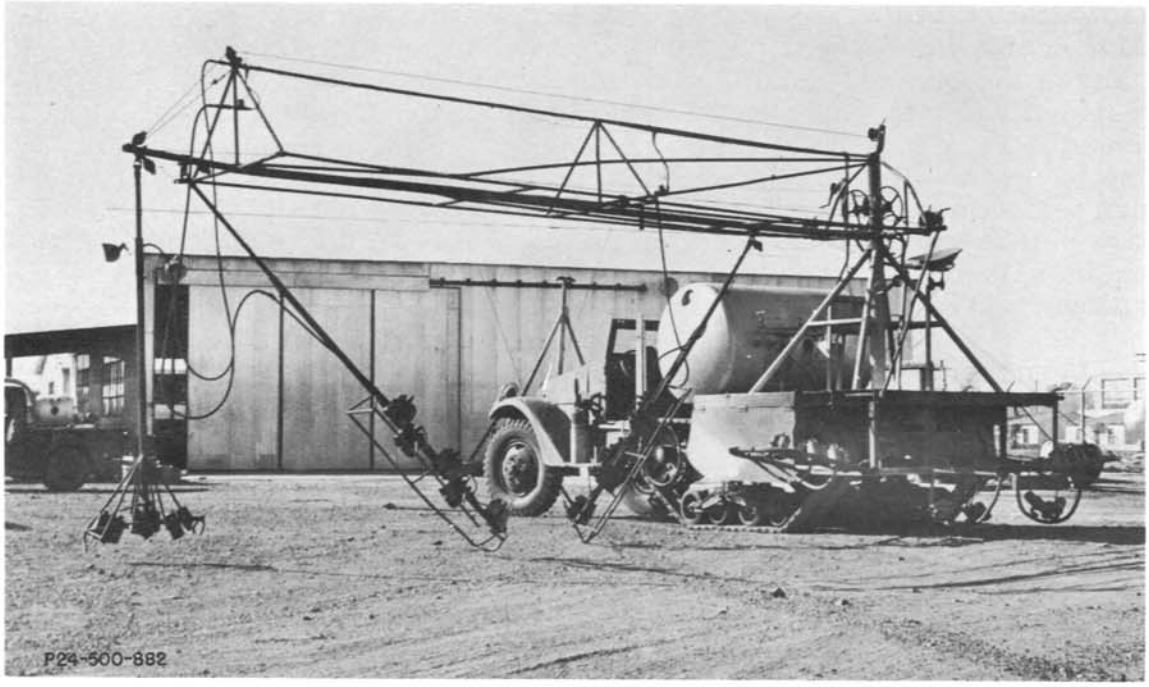


Fig. 104

lateral are being burned by the truck mounted burner constructed in the shops of the Carlsbad Project, New Mexico, by project personnel. In this type of burning, the truck travels about 3 miles per hour.

Fig. 105

Fig. 106

Another burner that is very universal in operation, easily adjustable to meet unusual conditions, and very mobile, is that shown in Figure 106. This rig was constructed by project personnel in the shops of the Tucumcari Project, New Mexico. It is hydraulically operated, and hydraulic mechanism from an old pull grader was used for the controls on this machine. The operator sitting on the truck bed turns with the boom, which also is controlled hydraulically in its horizontal and vertical movement.

The burner consumes about 70 gallons of liquid propane fuel per hour under continuous operation. The truck ordinarily travels 1 to 3 miles per hour in burning green weeds and grasses, the rate of travel varying with the height of the canopy and the smoothness of the road. In burning dry weeds, the rig travels 5 to 6 miles per hour.

A 400-gallon tank has been mounted across the truck frame and the liquid butane is piped from the tank to the burners. A high-pressure regulator set at 50 pounds pressure is used to control the flow of butane to the burners.

The swinging boom is made of pipe and is mounted on a mast pipe. The mast pipe consists of two pieces of pipe, actually, with the smaller top pipe mast fitting inside the larger lower pipe. Roller bearings at the top and bottom of the mast pipe provide for easy movement. A support made also of pipe and mounted on the front bumper of the truck is provided for the boom to rest upon when traveling from one location to another, or when the rig is not in use.

Fig. 107

Figure 107 illustrates the use of a burner mounted on a 2-ton truck equipped with a 30-foot swinging boom with a series of burners attached. The boom is regulated by a cable-control system, and the burners use a propane-butane mixture. This and three other similar burners are used on Las Cruces Branch of the Rio Grande Project, Texas-New Mexico.

Fig. 108

Burners mounted on trailers are shown in Figures 108 and 109. Figure 108 is a view of a trailer-mounted liquid gas weed burner in operation on small lateral on the Balmorhea Project, Texas. A third burning of the year is in progress.

Fig. 109

A general view of another butane trailer-mounted weed burner in operation on the Fort Sumner Project, New Mexico is shown in Figure 109. Note the air turbine mounted to blow the flame out the stack.

Burners constructed on trucks, half-tracks, or trailers, burn to the side and behind the carrier, while those that are tractor mounted, burn to the side and in front of the transporting vehicle. The latter are used in Region 5 entirely for searing and burning green weeds and grasses.

A project shop-constructed, tractor-mounted liquid gas weed burner used on the Tucumcari Project, New Mexico, shown in Figure 110, consumes about 70 gallons of liquid gas per hour under continuous operation. The machine operates at about 2 miles per hour when burning green weeds.

Intense heat from the burning of dry weeds in front of the tractor and butane tank makes this machine impractical for winter cleanup. The boom of the burner on this rig is raised and lowered hydraulically and rotated with a mechanical screw device.

Another tractor-mounted liquid gas weed burner is that shown in Figure 111. This burner is used on the Fort Sumner Project, also in New Mexico. This burner also was constructed by project personnel in the project shops. It is hydraulically operated.

In operation on a project lateral, the burner head works to the side and front of the tractor, which makes it easily visible to the tractor operator. Like the previous tractor-mounted burner used on the Tucumcari Project, care is used in burning because of the proximity of the tractor and the butane tank.

Fig. 110

Fig. 111

Cost of burning varies from project to project and depends on the amount of liquid gas consumed per hour of operation and the number of burnings required to suppress the vegetation. Ordinarily, liquid gas weed burners operated on a tank pressure of about 100 pounds per square inch, and each burner head will consume 8 to 12 gallons of liquid gas per hour. The efficiency of liquid gas burners is considered very high as little smoke is evident.

On ditches heavily infested with weeds and grasses, two burnings are ordinarily recommended. The first burning being accomplished with the equipment moving at a rate of about 3 mph. This searing results in an effective top kill even though there is little immediate change in plant appearance. The second burning, made about a week to 10 days later, consumes the old dead tops and retards any regrowth of new plants. By continuously burning and reburning

when the green plants reach a height of 8 to 10 inches, weedy grasses and undesirable vegetation on the inside slopes of ditches have been successfully controlled.

A weed burning program has been employed on a part of the Rio Grande Project, Texas-New Mexico, for several years. In 1949 and 1950 five to six burnings were necessary to keep the Johnson grass suppressed to the extent it did not retard the flow of the water in the canals and laterals. Following the same procedure for Johnson grass control during the years, only four burnings were necessary in 1954, and it was indicated that only three burnings would be required in 1955.

In 1954, the average cost for burning green weeds on the inside of small ditches on the Carlsbad Project, averaged $8.78 per mile per burning, and the cost of burning 35 miles of small ditches on the Balmorhea Project, Texas, averaged $7.80 per mile of burning.

Oil Type Weed Burners

Several projects are now using fuel oil in the burning of weeds. One such machine used on the Middle Rio Grande Project is shown in Figure 112. The boom on the burner is 20 feet in length, and the burner uses about 150 gallons of fuel oil during an 8-hour work period.

Fig. 112

Fig. 113

Burning of weeds on a California Project using a commercially available burner mounted in the back of a 1-1/2-ton flat-bed truck is shown in Figure 113. Note the spray rig at right center of illustration. Projects on which there is dry native vegetation beside the canal right-of-way must maintain adequate fire control apparatus to prevent the spread of fire to adjacent lands.

Fig. 114

A somewhat similar but smaller burner is that shown in Figure 114 used by the Kennewick Irrigation District on the Yakima Project, Washington.

There are approximately 350 miles of large riverside and interior drains and 200 miles of relatively large main canals on the Middle Rio Grande Project in New Mexico. As a rule, these waterways and drains are 8 to 12 feet in depth with comparatively long side slopes. Willows, salt cedar and other native vegetation grow profusely on these side slopes.

The weed control procedure in the past had included chemical spraying of this vegetative area using a 33-foot hydraulically operated spray boom. After the brush had been killed or controlled, the next step consisted of mowing with a heavy duty mower leaving the tops of the dead vegetation and other debris in place until it had dried sufficiently and could be burned. Burning of the vegetation and tumble weeds that accumulate throughout the perimeter of the drains and waterways was accomplished largely by the use of propane-butane burners mounted on trailers pulled behind trucks or tractors.

Unfortunately, the length of the boom used was limited to about 10 to 15 feet of area; the radius of the boom from the edge of the trailer.

Fig. 115

Accordingly, this limited the burned area to only part of the canal and drain slopes. To complete the job, it was necessary to use laborers and hand burners to extend the burning to the bottom of the canals, to the water surface in the drains, and to the tumble weeds generally located near the water's edge.

The project was well equipped with chemical spray equipment, which included a 33-foot hydraulically operated sectional spray boom. This boom was utilized with an adapter to spray a burner oil or a like material and accomplish the job more effectively and economically. Figure 115 is a view of the unit in operation.

The spray equipment, all mounted on a 1-ton, four-wheel drive truck, consists of a turbine pump, direct connected to a gasoline engine. A 4-foot extension was added to the end of the spray boom, and with a tee and two sections of pipe, provided for the mounting of three 6502 tee jets at 20-inch spacings. The tee jets were drilled out to enlarge the holes and make it possible to apply approximately 100 gallons per hour of diesel oil in small droplets at an approximate pressure of 25 pounds per square inch. The more detailed view of the burner in operation, Figure 116, shows the 4-foot extension, burner tip, and bracing of the burner tee to the extension pipe.

With the 33-foot boom and extension, and pumping facilities on the spray truck, it is now possible to completely cover the entire perimeter of the drains and large canals with a minimum of effort.

Fig. 116

While the use of oil as a catalyst for burning debris and willows is no innovation, this burner constructed by the Middle Rio Grande Project forces is accomplishing a far better job than formerly accomplished by the use of a propane burner. The modified burner has improved the efficiency of the operation by 20 to 30 percent, and, although the greatest improvement has been on the drains and larger canals, some further savings are being realized by being able to burn the entire section of smaller canals.

A combination trailer-mounted weed sprayer and burner was designed and constructed by personnel of the Lower Colorado River Indian Agency, Parker, Arizona, Figure 117. Units of the size and

Fig. 117

design shown have proved very useful for spraying or burning undesirable weed growths on farm ditches, along fence lines, and other places. Similar light compact machines can be used advantageously on irrigation projects which have narrow and inaccessible ditchbank operating roads.

The tank, engine and pump combination, and boom pedestal can be constructed as one unit on a frame which is detachable from the trailer. A positive means of agitation has been included in later models of this machine. A sprayer with an agitator is required for successful application of oil-water mixes, emulsions, suspensions, and for proper stirring of most herbicides or insecticides with the diluent being used.

A small gasoline engine was used to drive the pump on the unit pictured, but other models have the pump attached to the tractor power takeoff shaft.

A gear, piston, or centrifugal pump which develops from 40 to 90 pounds pressure per square inch is satisfactory for spraying, but for burning, higher pressures are preferred. A pressure regulator and pressure unloader should be installed with the pump so discharge to the nozzles is constant and unvarying.

The boom is constructed of double strength steel tubing reinforced with struts and turnbuckles. Oil resistant hose and high pressure fittings are used on the pictured machine. The boom pedestal can be moved to either side of the trailer which allows the operator to direct the boom into the ditch.

## Mechanical Equipment For The Control Of Land Weeds

Various types of mechanical equipment have been used in the control of land weeds. Some equipment is relatively simple and inexpensive and other equipment is expensive and costly. Some newer machines such as mowers and shredders are now on the market and many of these accomplish a great deal of work in a short while.

Until very recently, farm-type equipment fulfilled the needs on most projects, although in some instances inefficiently. Mowers, brush cutters, drags, disks, and other special pieces of equipment to accomplish a particular job are included in the list of mechanical equipment used by various organizations and agencies in the control of land weeds. New equipment now available commercially has contributed to increase efficiency and made it possible to do work previously only accomplished at very high cost, if at all.

Fig. 118

Mowers

Wheel-type farm tractors with hydraulic and mechanical control of conventional cutter bars are used on many projects in maintaining canals and laterals. Heavy-duty equipment of similar type is also available commercially. One such commercially available mower is shown in Figure 118. The mower is completely hydraulically operated. The cutter bar is extendable and retractable. Contractors clearing drains for rehabilitation on the Middle Rio Grande Project, New Mexico, used the mower with various degrees of success. The cutting of phreatophyte fringe growths along canals and drains requires a machine that is much more durable than for grass cutting. The cutter is designed to mow plants up to 3 inches in diameter.

The Middle Rio Grande Project has acquired a machine of the above design and mounted it on a crawler-type tractor, Figure 119. With the cutter bar in the partially raised position as shown, obstacles and structures can be easily cleared.

Fig. 119

Fig. 120

On the Donna Division of the Lower Rio Grande Rehabilitation Project, Texas, Figure 120, a commercially available 60-inch offset shredder mounted behind a small diesel tractor is shown

in use mowing an embankment along a project canal. The shredder can be utilized to mow either up or down on side slopes.

Fig. 121

An unusually wet month of July caused a very heavy growth of weeds on the canal and lateral rights-of-way of the Tucumcari Project in New Mexico, as well as in the water prisms, since the ditches were empty much of the month. In order to use mower tractors and operators in the most efficient manner, a 7-foot sickle cutter bar was placed on the side of one tractor already equipped with a three-rotor, 8-foot cut, rotary mower mounted on the rear. This made it possible for the one machine to cut a 15-foot swath, clearing the operating road and one bank of a lateral in a single operation, as shown in Figure 121.

The side-mounted sickle cutter bar is driven by a hydraulic motor while the rotary mower is driven from the tractor power takeoff.

The machine operated very smoothly and covered a lot of ditch-bank in a short time. The project is so well pleased with the operation of this machine that a second one has been purchased. Both the rotary mower and the hydraulically-driven sickle mower are available commercially. The price of the hydraulic mower is about $900.

Fig. 122

A somewhat more elaborate rotary mower is the one shown in Figure 122 and used on the Rio Grande Project in Texas. Pulled by a wheeled tractor, the commercial mower is used to good advantage in clearing wider areas at one pass. The outer sections of the mower are hinged and can be raised or lowered hydraulically. Power for operation of the mower is furnished by the diesel-wheeled tractor shown towing the mower.

Fig. 123

In an effort to reduce costs and more efficiently control the algae and weeds, both in the canals and drains, as well as on the banks and side slopes, the heavy-duty weed and brush cutter shown in Figures 123, 124, 125, and 126 has been used in recent years.

The machine consists principally of large drums equipped with heavy-duty, double-edged reversible blades, with drum and blade assembly carried in a heavy-duty towing frame. The machine is versatile, as illustrated, and units can be used side by side or in tandem, and can be set with or without angle, depending on the work to be done. The drums can be filled with water if additional weight is desired.

When the cutter is used to remove algae or aquatic weeds, as shown in Figure 124, it is set up tandem and offset so that when pulled forward it

Fig. 124

Fig. 125

Fig. 126

has a vigorous action and the cutting edges on the two units overlap each other, cutting the growth into lengths of approximately 12 inches. The vigorous action of the cutting edges in the tandem offset style tears the growth loose and in many instances uproots the aquatic weeds. White roots are often seen floating in the lateral after the machine passes. After the growth is torn loose, it can be floated out with the irrigation water.

When the cutter is set up with the drums side by side, Figure 125, the unit can be used with one drum running on top of the bank and the other drum on the slope, either on the inside or the back side of the canal.

The cutter can also be used on a cable behind a tractor to clean along drainage bank slope, and when closely hitched to the drawbar of a tractor, the cutter is an excellent piece of equipment to clear wide flood channels of undergrowth. In this manner, the machine can also be used to clear land preparatory to land leveling.

A single D-8 tractor has been used to pull the 7-foot long cutter on much of the work. In clearing a lateral choked with a growth of algae and aquatic weeds, Figure 124, the tandem cutter was towed by two large tractors. Operations on a side slope with the cutters in tandem is shown in Figure 126.

A simple weed cutter which can be used very effectively in substation yards to reduce maintenance costs has been constructed by the power O&M crews of the South Platte River District, Region 7. The device was constructed for attachment to the front bumper of the truck as shown in Figures 127 and 128.

Fig. 127

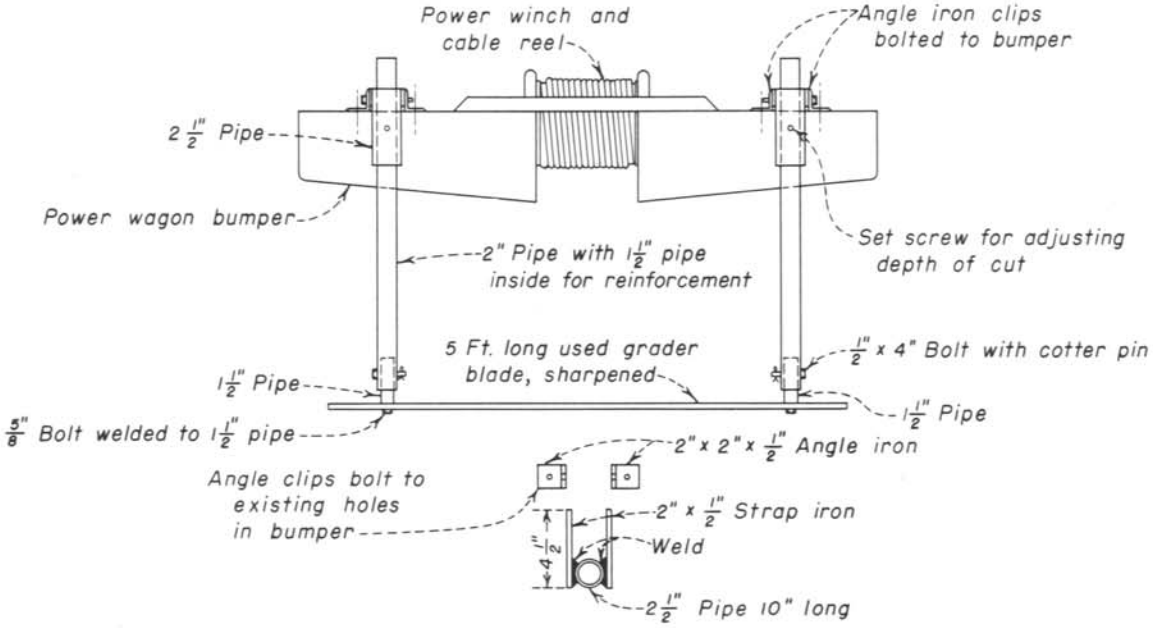


POWER-WAGON MOUNTED WEED CUTTER

Fig. 128

The cutter is reported to work very effectively in gravelled substation yards where the cutter bar is set to cut 2 or 3 inches below the surface. In moving forward the blade slides through the gravel cutting the weeds below the surface and bulking and freshening the packed gravel. In backing, the blade drags, pulling out the weeds and leveling the gravel.

The cutter was built at a cost of $22.95, all of which was labor. Materials for construction of the device were obtained from the shop scrap pile. It is estimated that work previously accomplished by two men in 40 hours, is now done with the cutter in about 5 hours.

Disks, Drags, and Similar Equipment

Many of the pieces of equipment used in the control of growing weeds also are applicable to or a part of the disposal of weeds and are discussed in the section of this bulletin devoted to this subject; however, one device, Figure 129, is typical of the devices of this type that can be used for cutting water weeds growing in channels, in that many of them must be operated in an "off-set" position behind a towing device.

Operated by the Truckee-Carson Irrigation District, Newlands Project, Nevada, the unit has been very successful in controlling water weeds in large canals.

A boom is mounted on the back of a tractor. Two rows of heavy disks, 18 inches in diameter, are attached in tandem to the boom by adjustable cables. The cables are controlled from the power takeoff and can be adjusted to lengthen or shorten the distance between the boom and the

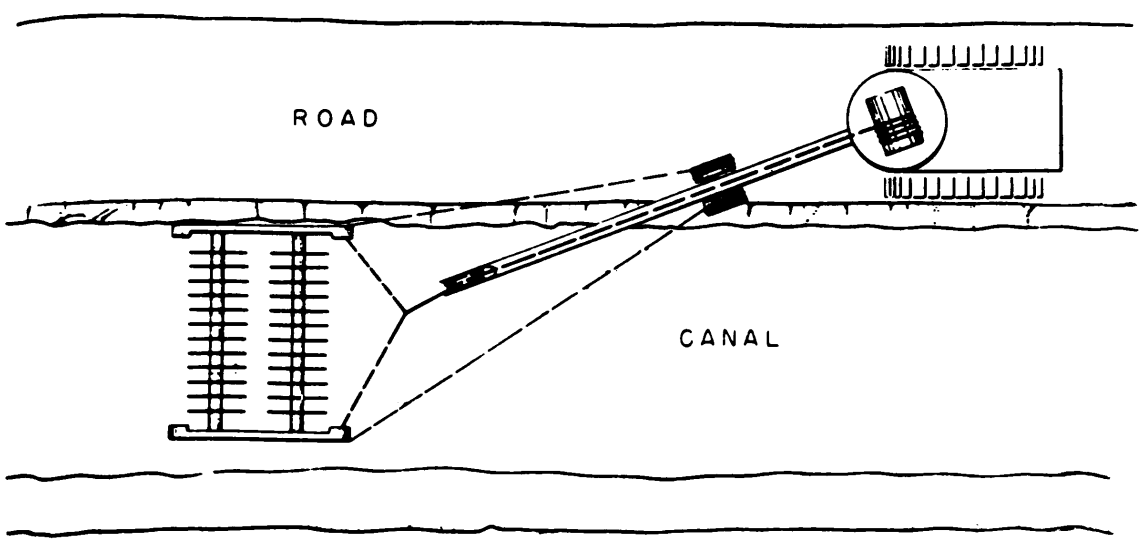


Fig. 129

disks, or to control the direction of the disks. The disks also can be raised over drops or other obstructions by manipulating the cables and boom.