Department of the Interior
Bureau of Reclamation

OPERATION AND MAINTENANCE EQUIPMENT AND PROCEDURES

RELEASE NO. 34

October, November and December 1960

LAST COPY - DO NOT REMOVE

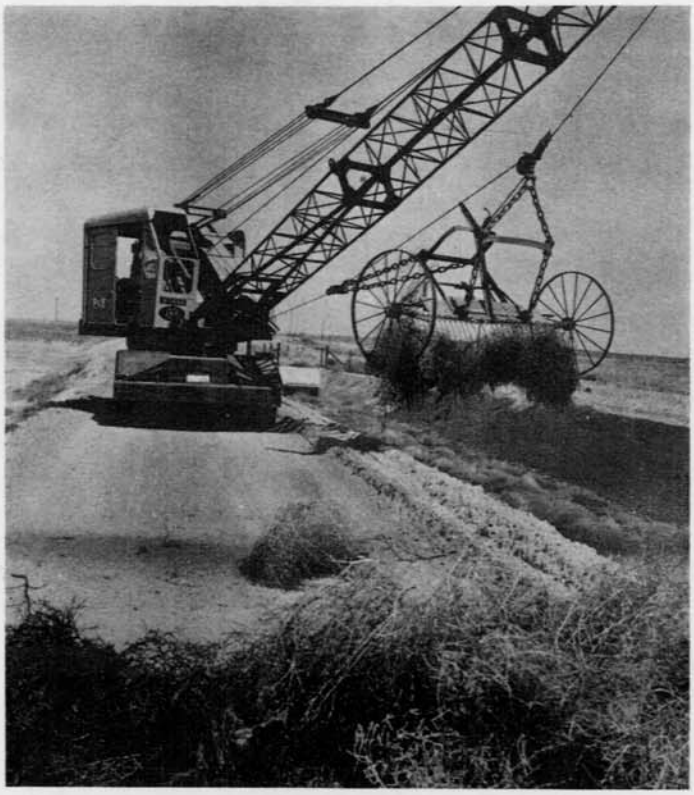

LAST COPY - DO NOT REMOVE

LAST COPY - DO NOT REMOVE

CONTENTS

Shaft Packing Shaper and Cutter
Low Pressure Alarm on Compressed Air System
Lubrication Oil Pump Maintenance
Pipe Cleaners
Cautions in Using Epoxy Resin Compounds
Effects of Suspended Sediment on Pondweeds
Protecting Wire Rope Hoist Cables
Use Care in Draining Some Pipe Lines
Removal of Electric Lamps and Sockets
Automatic Operation of Dump Truck Tailgate
Hay Rake Removes Weeds
Drag Bucket Maintenance of Disposal Channels
Pressure Handle for Portable Drills
Water Level Indicator
Making Tires Go a Long Way
Redecking Farm Bridges

COVER PAGE

Photograph shows hay rake removing weeds. This rake was used in the Upper Meeker Canal in the Frenchman-Cambridge Division of the Missouri River Basin Project, Nebraska. PX-701-247.

OPERATION AND MAINTENANCE

EQUIPMENT AND PROCEDURES

Release No. 34

October, November, and December 1960

INTRODUCTION

The article "Making Tires Go a Long Way," on page 16 of this issue of the bulletin, lists several rules, that if followed, will prolong the life of tires in general, although written primarily for the care of tires on large earthmovers. The article, which appeared in the September 1960 issue of Construction Methods and Equipment is reproduced herein with the permission of the publisher, Copyright 1960 by McGraw-Hill Publishing Company, Inc.; further reproduction is prohibited.

This bulletin, published quarterly, is circulated for the benefit of irrigation project operation and maintenance people. Its principal purpose is to serve as a medium of exchanging operation and maintenance information. It is hoped that the labor-saving devices or less costly equipment developed by the resourceful water users will be a step toward commercial development of equipment for use on irrigation projects in a continued effort to reduce costs and increase operating efficiency.

We would like to publish your ideas for labor-saving devices and more efficient operation and maintenance procedures. Send them to the U. S. Bureau of Reclamation, as shown below. Illustrative material such as photographs, drawings, or sketches add interest.

To assure proper recognition of those individuals whose suggestions are published in this and subsequent bulletins, the suggestion number as well as the person's name is given. All Bureau offices are reminded to notify their Suggestions Awards Committee when a suggestion is adopted.

* * * * * *

Division of Irrigation Operations
Commissioner's Office
Denver, Colorado

SHAFT PACKING SHAPER AND CUTTER
(Suggestion R1-59-154)

Luther Jackson, Machinist at the Grand Coulee Power Plant, Columbia Basin Project, Washington, has developed the device shown below, for shaping and cutting various types and sizes of shaft packing from 1/2-inch square to 1-1/2-inch square. Usually the larger sizes of packing are purchased in bulk form and are shipped wound on wooden spools. Frequently, packing shipped in this form is deformed to the point where it must be reshaped in order to place it in the gland with a minimum amount of effort. Previously, this reshaping was done by hand beating with a wooden mallet. Localized beating often produced a non-uniform cross section which required greater pressure on the packing gland to control water flow through the gland.

In one year's time including the overhaul of two main units, approximately 400 lineal feet of heavy packing is used. By using the device, the time required to prepare packing for repacking a gland, or adding additional rings has been cut in half.

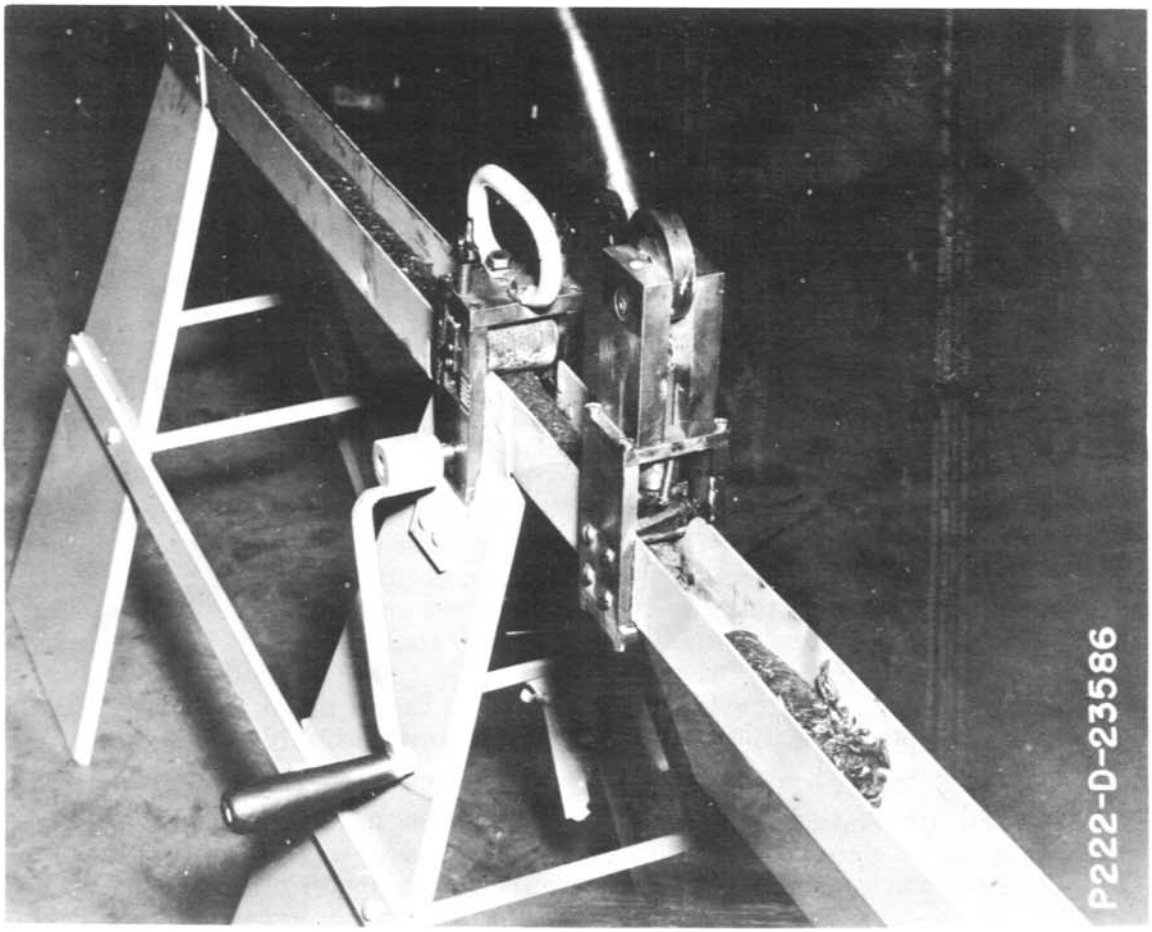

The device was fabricated from scrap materials at a cost of about $120, and consists of a roller mechanism and a cutter which are both mounted on a working platform or table. The roller mechanism is adjustable for various packing sizes. Packing is fed through the roller by a crank which drives one of the rollers that has small teeth for gripping the packing. The cutter is a shear type which makes a square cut.

* * * * * *

LOW PRESSURE ALARM ON COMPRESSED AIR SYSTEM
(Suggestion R2-59-158)

It is important to have a reliable supply of compressed air at the Tracy Pumping Plant on the Central Valley Project, California, so that there will be no delay in starting a pumping unit according to schedule. It is even more important when a unit is being shut-down in order to prevent damage to the thrust bearing; the oil film in the bearing is lost at about 20 rpm so that air-operated brakes must be applied to stop the unit with a minimum of rotation at slow-speed.

Since the compressors at the plant are located in a basement-level room and the operators are normally on the pump (ground) floor, the loss of the station air supply is only discovered when it is needed or when a routine inspection is being made. To overcome this problem, Andrew D. Lyons, Jr., and Bernard T. Sherry, plant shift supervisors, suggested that an annunciator system be wired to the control panel board on the operating floor, as an addition to the pumping plant protective system.

* * * * * *

LUBRICATION OIL PUMP MAINTENANCE
(Suggestion R2-59-159)

Paul L. Mayse, Pumping Plant Shift Supervisor, Plant Operations Unit on the Central Valley Project states that during the annual maintenance of direct current lubricating oil pumps, it has been found that the motor commutator has been corroded and in a rough condition due to lack of operation. When a pump is prepared for starting, the direct current lubricating oil pump runs only a few seconds and the alternating current lubricating oil pump then takes over. During the entire pumping season, the direct current pump probably runs less than 20 minutes.

To alleviate the problem somewhat at least, Mr. Mayse suggested that some schedule be set up so that at various times while a pump is in operation, the alternating current unit can be taken out of service, giving the direct current unit a chance to operate. This, it

is believed, would not only be advantageous insofar as the commutator is concerned, but would tend to dry out moisture that collects in the motor due to the high humidity in the plant during the summer months.

* * * * * *

PIPE CLEANERS
(Suggestions R1-59-116 and 123)

In Release No. 33 of the Operation and Maintenance Equipment and Procedures release, there appeared an article describing the use of a commercially available drill and cutter for removal of calcium carbonate deposits in foundation drains at Hungry Horse Dam. Other less costly project constructed devices have also been used for cleaning deposits from pipe drains and for other pipe cleaning jobs on the Hungry Horse Project.

One suggestion by Orville R. Ritzman of the Mechanical and General Maintenance Branch is the device shown at lower left, used in cleaning calcium deposits from pipe drains in the foundation gallery of the dam. It consists of a small wheel to which is attached cross chains from a conventional type automobile tire chain. In one pipe, grout was encountered in the last five feet of its depth. This was also easily and quickly removed with the device.

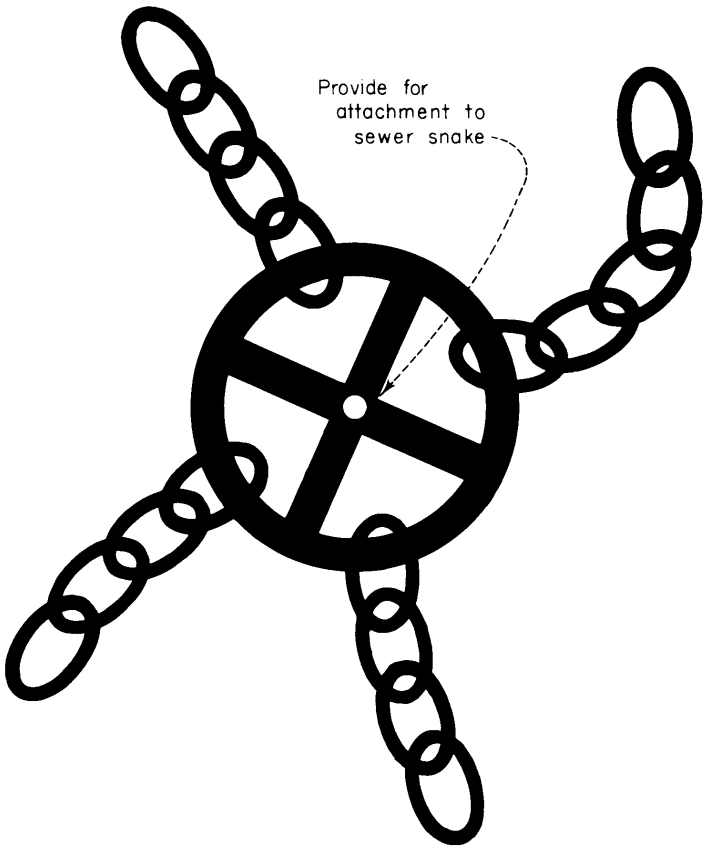

The wheel is designed for attachment to a "sewer-snake", which in turn is rotated by an electric drill. The device was constructed in the project machine shop with the wheel being made of round steel stock. Tire chains with a cross bar appear to give best results.

Another device used to clean larger diameter sump pump piping was developed by William A. McLauchlin and William F. Oberem also of the Hungry Horse Dam, Mechanical and General Maintenance Branch.

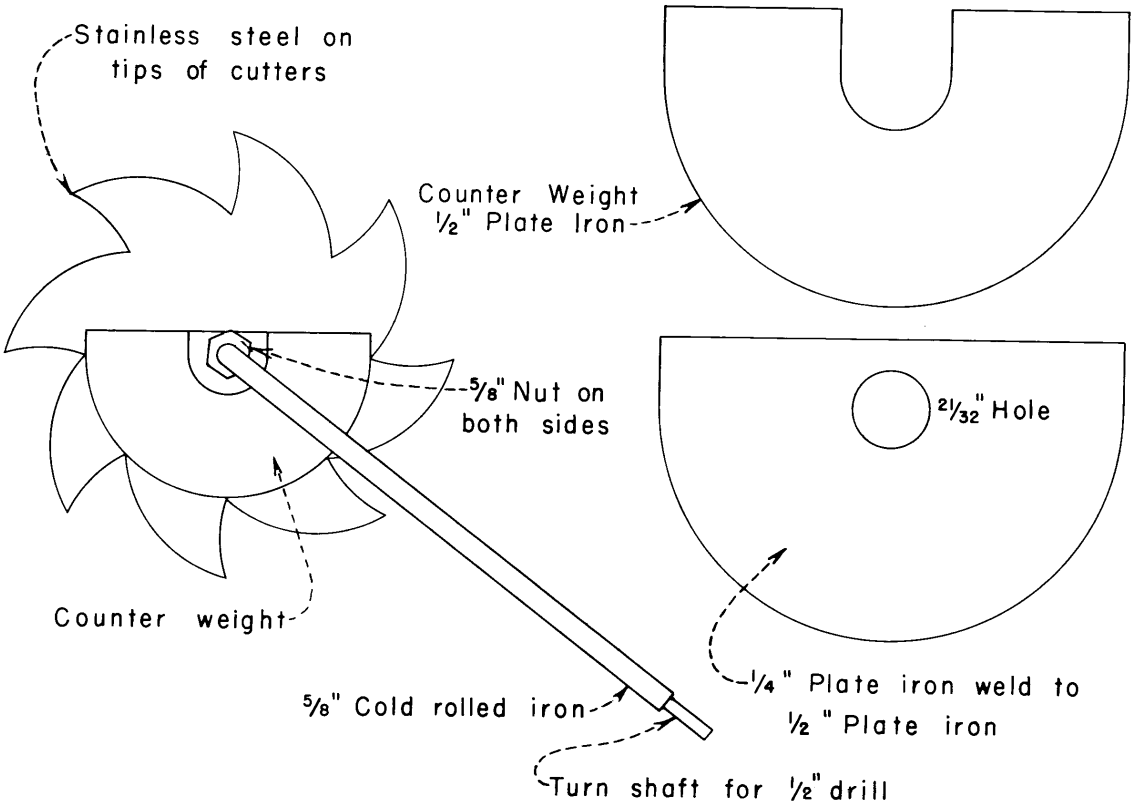

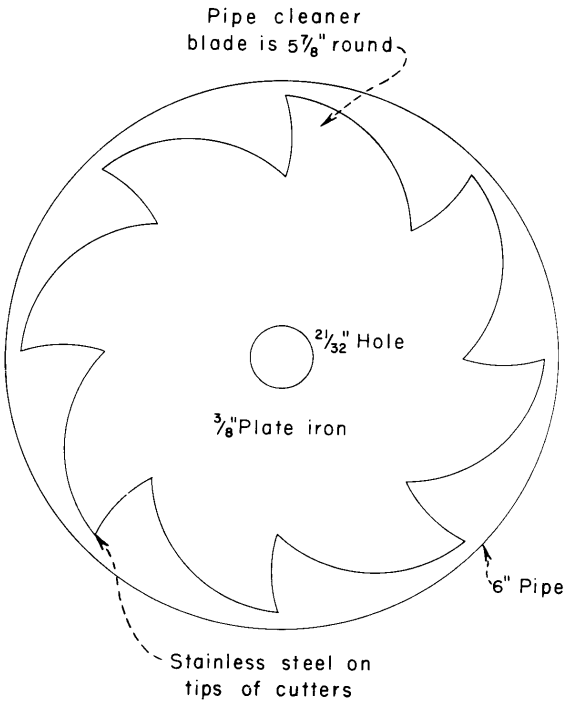

Their device, shown on this page is used to remove very hard lime deposits.

The cleaner shown was designed for use in 6-inch diameter pipe, but similar cleaners have been used in pipe as small as 4-inches in diameter. The tool accomplished the work speedily and completely without damage to the pipe and did not affect the coating of galvanized pipe.

As shown on the drawing the shaft of the device was turned to fit a 1/2-inch drill, which provided sufficient power for the work.

* * * * * *

CAUTIONS IN USING EPOXY RESIN COMPOUNDS

At the present time, as reported previously in Release No. 29 of the Operation and Maintenance Equipment and Procedures bulletin, the research work of the Bureau of Reclamation on the use of epoxy resin compounds as bonding agents and patching materials is in the preliminary stage. Numerous applications of the material have been made, and they do look promising. However, this article is not to report on installations made or performance of the material, but is to point out the need for care in the handling and use of epoxy compounds.

It is known that many epoxy resins and curing agents are sources of skin irritation; therefore, it is also recommended that all possible precaution be observed during the handling of the epoxy resin compounds and particularly that contact with the skin be avoided.

In handling all epoxy resin compounds, the following rules should be observed:

1. Wear rubber or vinyl gloves for handling epoxy resin components.

2. Work under good ventilation.

3. Keep working area clean. Any spilled epoxy should be wiped off immediately with disposable paper towels.

4. With contaminated gloves, do not handle items touched by others, etc.

* * * * * *

EFFECTS OF SUSPENDED SEDIMENT ON PONDWEEDS

In the past, field observations have frequently been made regarding a possible correlation between the amount of suspended sediment contained in canal water and the amount of aquatic plant growth in canals. Field observations have often indicated that as suspended sediment increases, the amount of aquatic weed growth decreases. Reports of observations reviewed have in no case given details of various factors contributing to suppression of aquatic plant growth. These statements have been of a general nature. To obtain more information under controlled conditions on this subject, a joint study by the Weed Control Investigations Unit of the Physical Investigations Laboratory Section, Chemical Engineering Laboratory Branch, and the Sediment Investigations Unit of the Hydraulic Laboratory Branch was initiated to determine shading effects of suspended sediment on aquatic weeds. The scope of the program consisted of determining the growth response of

various species of submersed pondweeds exposed to environment of various concentrations of two types of suspended sediments.

A joint investigation by the Chemical Engineering Laboratory Branch and the Hydraulic Laboratory Branch was undertaken to study the shading effects of suspended sediments on certain hydrophytes. Species of submersed pondweeds, commonly found in irrigation canals, were planted in pots and grown in drums containing a range of suspended sediment concentrations. Ungerminated plant propagules and established cultures of pondweeds were used in the study.

Two different sediments were used, one a commercial sodium-base montmorillonite-type bentonite, and the other a natural occurring bentonite-type sediment obtained from Angostura Reservoir.

Light quantity and spectral quality, penetrating the sediment-laden water, were measured by use of a limnophotometer which has a specially constructed photoelectric cell system. Light measurements indicated the intensity and spectral quality of sunlight were considerably changed upon penetration into water containing suspended sediment. The sediment from Angostura Reservoir caused greater light reduction at lower concentrations than did the commercial bentonite.

When plants were exposed to reservoir sediment concentrations of 50 ppm, the percent reduction of dry weight of plant material was approximately 33 percent less than the dry weight of plant material in the control drum. Reservoir sediment concentrations greater than 1,250 ppm were not effective in producing additional significant growth reductions than that attained at the 1,250-ppm level. The commercial bentonite sediment caused growth reductions of a similar trend but required greater concentrations than field sediment to produce similar effects.

* * * * * *

PROTECTING WIRE ROPE HOIST CABLES

On the nine spillway radial gates at Altus Dam, W. C. Austin Project, Oklahoma, 6 x 37 hemp center wire rope is used for hoist ropes. Service life with normal protective procedures was about 2 to 4 years. Due to galling, stainless steel ropes gave little if any better service in the corrosive water of the reservoir than did the hemp center rope.

Reservoir Superintendent, Jim Savage, reports that new cables of the ordinary steel hemp center type were put on the gates in 1951 and cables for 8 of the 9 gates were additionally protected by covering that part of the rope below the water line with rubber air hose. The space between the rope and the hose was filled with crater compound or a heavy transmission grease.

A recent examination has disclosed the encased wire ropes to be in perfect condition, which is rather remarkable considering the length of time the ropes have been submerged in the reservoir.

* * * * * *

USE CARE IN DRAINING SOME PIPE LINES

Extensive damage to large steel-lined concrete siphons can result from development of a vacuum inside the pipe during draining operations. This damage can take place where there is a hump in the profile of a siphon equipped with air and vacuum relief valve to automatically admit air to the pipe, as it is drained and where a malfunctioning of the relief valve or some other factor results in a vacuum being developed. The vacuum developing in a steel-lined pipe of this kind can result in the liner being buckled from the arch with extensive repair being necessary.

The possibility of large pipe lines being damaged by the creation of a high vacuum within the pipe and the resulting expensive repairs has been called to the attention of operators on Bureau of Reclamation projects. Should valves fail to operate properly while draining pipe lines and a vacuum develop, serious damage to the structure may result. It is, therefore, important to determine that vacuum relief valves are functioning properly both before and during the time lines are being drained. This checking should, of course, include making sure that any guard valve located between the relief valve and main pipe line of siphon barrel is open at all times, except during emergency repair of the relief valve when the siphon is under pressure.

* * * * * *

REMOVAL OF ELECTRIC LAMPS AND SOCKETS
(Suggestion R2-60-17)

The method of removing bulbs and socket bases from the lighting fixtures in the Shasta Dam Parking Area, Central Valley Project, California, as illustrated on the following page, may have application on some of our projects; however, the suggestion has been very useful where it is difficult to secure a handhold on the bulb in street light type fixtures with bases that closely surround the bulb.

Charles M. Fouts, Electrician of the Shasta Operations Field Branch, made the suggestion, and it is used to pull the light bulbs and sockets from street lights and certain other types of fixtures when replacement of bulbs is necessary.

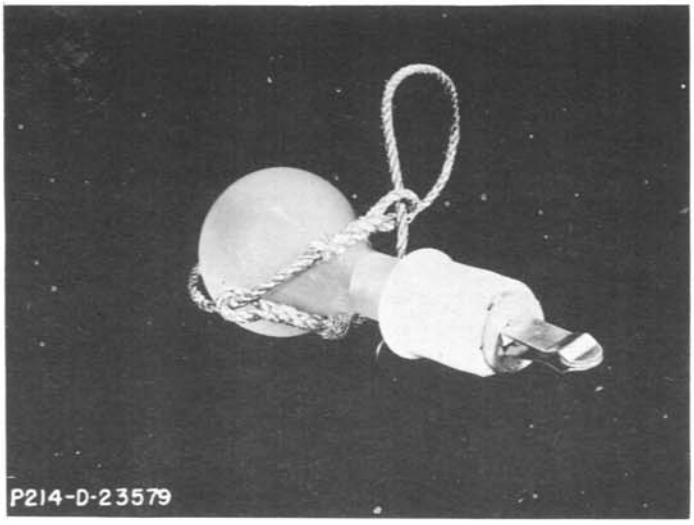

As illustrated in the photograph at left, a length of one-fourth-inch diameter rope, with each end spliced over the opposite ends, forms a loop that can be placed around the neck of the light bulb.

The method of removal eliminates the possibility of the lamp bulb breaking in one's hand.

* * * * * *

AUTOMATIC OPERATION OF DUMP TRUCK TAILGATE
(Suggestion R2-60-51)

A device which operates off of the tailgate locking-handle head-rod of a dump truck to automatically open the tailgate locks at a predetermined angle of the raised body, and positively lock the tailgate automatically when the body is fully lowered has been developed on the Central Valley Project in California, by Lee Goodson and Leland Willingham of the Fresno Operations Field Branch. As illustrated

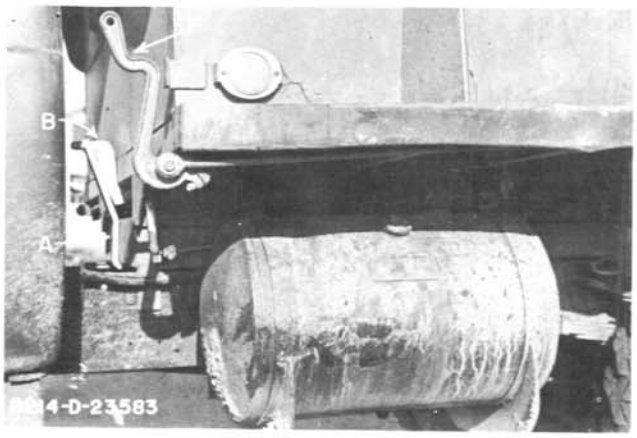

an adjustable anchor "E" is fastened to the truck frame near the rear end of the frame. A lightweight cable "D" is threaded through eyes fastened to the bottom member of the dump bed and attached to a fixed lever "C" on the tailgate locking-handle head-rod "G". As the body is raised the cable tightens, pulls on the lever and trips the tailgate.

Another lever "B" is fastened to the tailgate locking-handle head-rod parallel to the standard locking-handle "F". As the body is lowered this lever strikes a slotted bar "A" which causes the lever to turn the head rod to the locking position closing the tailgate locks, and positively holding them locked until the body is again raised.

More detail of the adjustable cable anchor is shown in the photograph at top left. The dumping angle of the truck bed may be changed by screwing the eye-bolt up or down, thus lengthening or shortening the cable. Additional detail of the automatic locking device is shown in the photograph at lower left. As the bed is lowered, the lever "B" contacts the slotted bar "A" mounted on the truck frame, causing the head-rod to turn to the locking position. This bar is slotted to assure that the lever cannot slip. The tailgate locks then cannot be opened until after the bed is in the fully lowered position.

* * * * * *

HAY RAKE REMOVES WEEDS

Water logged weeds had to be removed from the first 2-1/2 miles of the Upper Meeker Canal in the Frenchman-Cambridge Division of the Missouri Basin Project, Nebraska, to avoid the plugging of downstream turnouts and other works. The problem was complicated by the

fact that it was necessary to remove the weeds without damage to a 4-in. thick layer of slag that had been placed on the side slopes of the canal to reduce erosion of the loessial type material through which the canal had been excavated and of which a compacted earth lining had been constructed in some reaches. Removing the accumulated water-logged weeds at a reasonable cost was, of course, a further consideration.

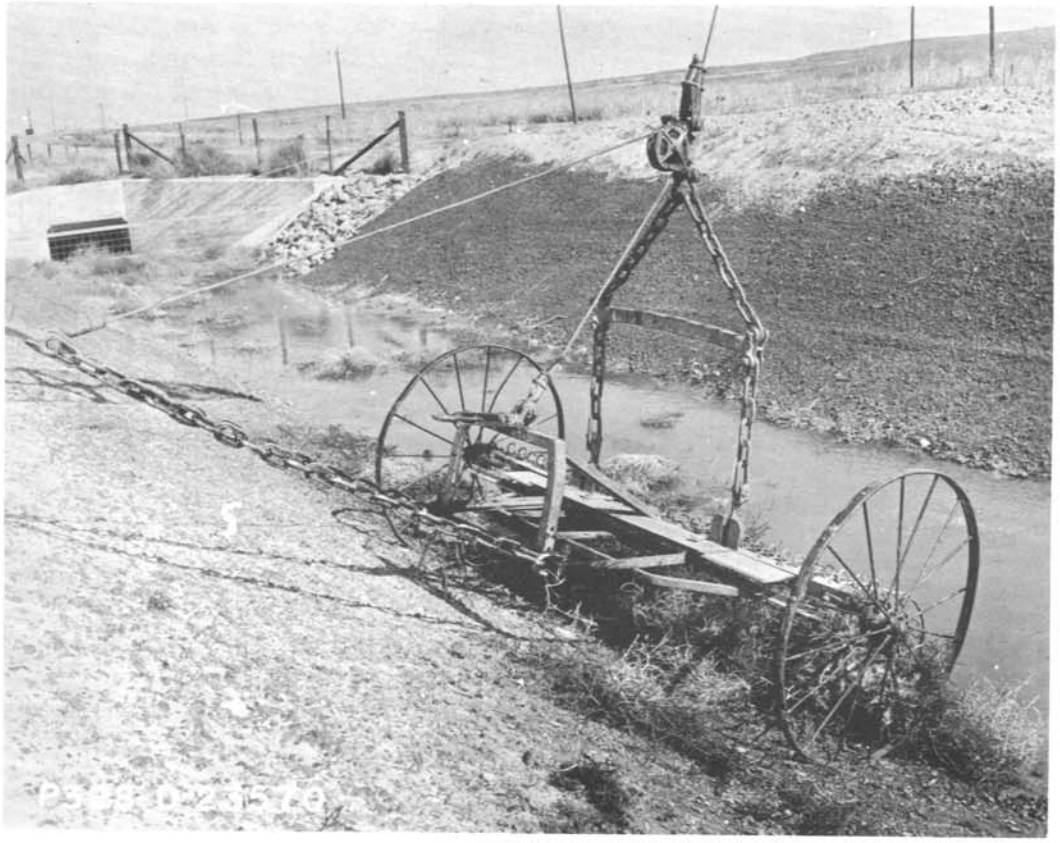

The project forces using an idea of Dragline Operator, J. L. Hupf, ingeniously adapted the effective rake pictured on the cover of this issue. The empty weed rake showing cable and chains in position for dragging is shown in the photograph at the upper left on the preceding page. In the lower photograph on the preceding page, the loaded weed rake is being dragged from the canal section by the truck mounted dragline.

In the photograph at left, the improvised weed rake is in the dumping position.

The special problem imposed in cleaning the waterlogged weeds from the canal was quickly solved with the hay rake and damage to the slag protective layer was avoided.

* * * * * *

DRAG BUCKET MAINTENANCE OF DISPOSAL CHANNELS
(Suggestion No. R1-CB60-136)

Maintenance of disposal channels (drains and wasteways) has been most often limited to correctional procedures. A channel was constructed according to the best engineering principles available. It was operated according to the best practices known to the manager. At some time before the channel became so deteriorated it could no longer function, it was cleaned or otherwise rehabilitated.

A successful preventive maintenance procedure is one developed on the Columbia Basin Project by O. A. Mowery. The preventive maintenance offers full season troublefree operation, rather than a gradual reduction of the channel capacity. Costs of maintenance and of operation are reduced, beginning with the first year.

The success of the maintenance operation requires an adequate supply of water to carry sand, silt, and fine debris downstream. More water is turned into the channel if the initial flow is too low. Extremely heavy grass berms or intrusions may require trimming by ditcher blade or other means before the drag bucket procedures can be started.

Drag bucket drain maintenance requires access or roadways on both sides of the channel. As shown in the accompanying photographs a truck-mounted dragline operating on one side of the channel is employed to jointly pull a special lightweight open-web bucket, and to dump the bucket as it becomes full of debris. A crawler tractor with cable winch is used on the opposite bank to pull and to keep the bucket aligned in the channel. The bucket is designed to very nearly fit the bottom of the channel. The square teeth are set to hold the bucket steady, yet not dig excessively into the channel.

The effect of a first pass through a channel is to clean off most sandbars, to straighten beginning meanders and to cut a light channel through sloughed deposits, as shown in the photograph above where the drag bucket is moving downstream, cleaning the drain during the first pass. During this first pass, cattails and tall green weeds are pressed against the banks and dry weeds are accumulated and lifted out as necessary. One or two additional passes may be required if bars or meandering are beyond the beginning stage.

In the photograph below, looking downstream, the drag bucket is moving upstream, cleaning the drain after one pass had been made in heavy cattail growth and through an area the banks of which had sloughed the previous year.

With a pilot channel made to conform to the proper alignment of the drain, the water flowing in the drain then performs most of the additional work. Excessive deposited materials are laid up on the slopes in thin rolls which readily "melt" into the flowing water. Further downstream the materials are deposited as a fairly uniform layer.

Grasses seeded for waterline protection and weed control may be temporarily covered with a thin layer of soil; however, recovery occurs within a few weeks. Cattails bent sharply during the operation appear to be retarded, the density of stands greatly reduced. Willows had been previously controlled with 2, 4-D.

The drag bucket method of cleaning of drains and wasteways has been effective on a new disposal system which lies in sandy soils. It is expected that heavy cleaning will not be required so often as the system becomes older. Costs of cleaning by the drag bucket method ranged from $40 to $70 per lineal mile, compared with $125 to $500 per lineal mile by conventional methods.

PRESSURE HANDLE FOR PORTABLE DRILLS

There is now on the market the pressure handle for portable electric and pneumatic drills shown in the photograph at the left. The pressure handle is reported to take the hard work out of using a portable electric or pneumatic drill with no fatiguing push needed to feed the drill into the work and no effort required to support it. The operator simply guides the tool and the pressure handle and the motor does the work.

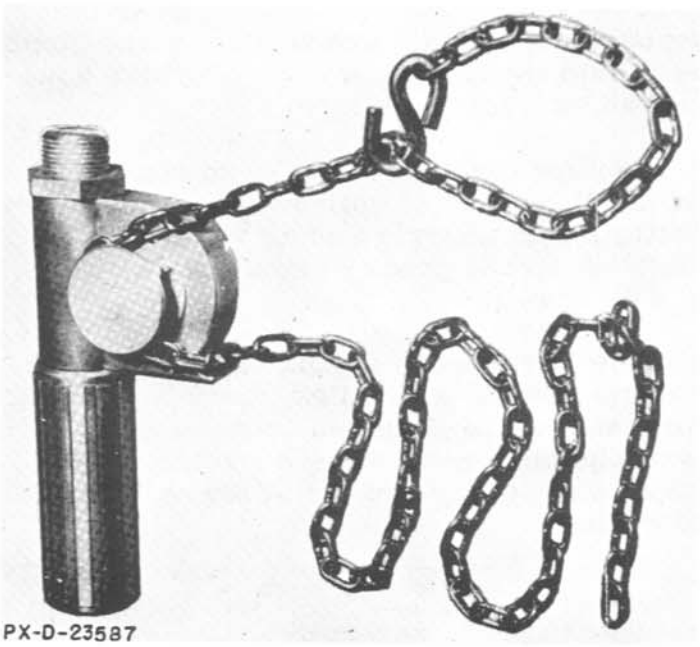
PX-D-23587

The pressure handle feeds the drill by pulling it into the work. One end of the feed chain is fastened to the work, and the other end is placed over the chain sprocket on the pressure handle. A slight twisting pressure on the grip turns a worm gear which rotates the sprocket and creates an enormous pulling force in the chain. To install the handle on any side handle type portable electric or pneumatic drill, it is only necessary to remove the standard "dead" handle and screw in the pressure handle. Tapped plates are available for drills with factory attached hand grips.

For further information, write the Division of Irrigation Operations, U. S. Bureau of Reclamation, Denver Federal Center, Denver 25, Colorado, Attention: Code 400.

* * * * * *

WATER LEVEL INDICATOR
(Suggestion R3-PD-59-28)

The water level indicator devised by Foreman, (Gardener), Clifford J. Bird, of the Parker-Davis Project Office, and shown on the following page, makes it possible to judge the depth of water in an irrigation sump without going back and checking the water level. At a glance, it is possible to tell whether the water level is dropping or rising and makes it possible to save water, pumping power costs and above all save time that can be spent more profitably than watching the water level in the sump.

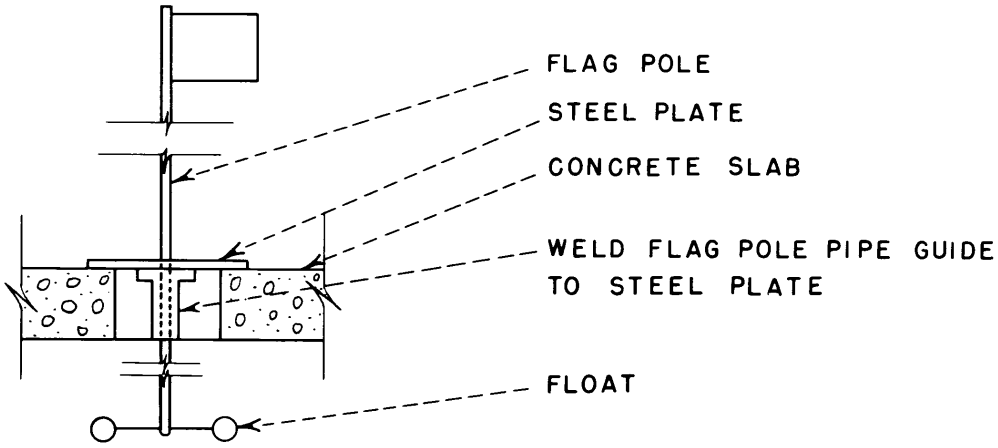

DETAIL A

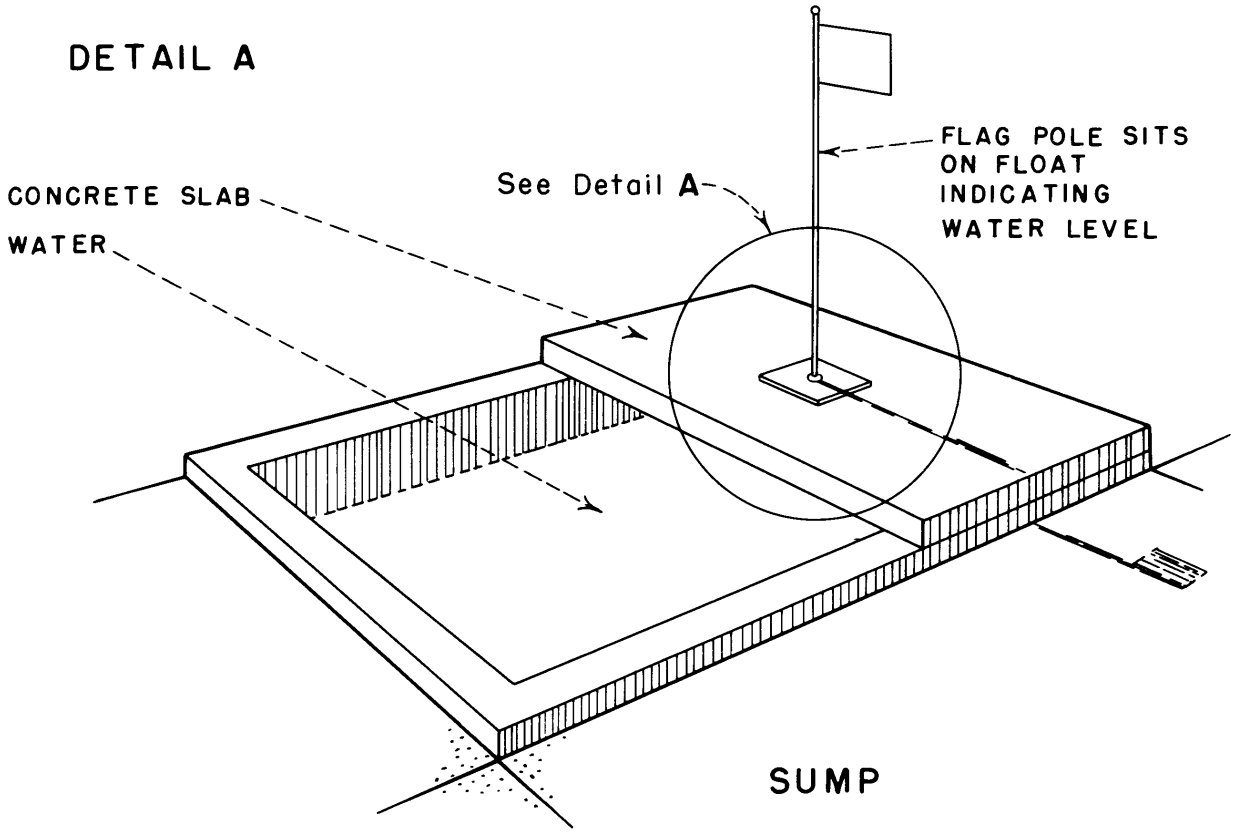

SUMP

The particular application made of the suggestion by Mr. Bird may not be needed on many projects, but it may have other applications.

* * * * * *

MAKING TIRES GO A LONG WAY
(See Introduction)

Huge tires on earthmovers have boosted haul road speeds and cut the costs of off-the-road operations, according to an article in the September, 1960 issue of Construction Methods and Equipment. But the savings can be lost unless a few common sense rules are followed to prolong tire life.

Key to such prolongation is daily tire inspections with emphasis on the following four points:

1. Checking inflation pressures.
2. Inspecting cuts.
3. Checking rims and flanges.
4. Checking tire wear.

Inflation

Check tire pressures with a low-pressure gauge marked in 1-lb gradations. Do this in the mornings when tires are cool. If a tire is considerably underinflated, do not operate the vehicle until the cause of the air loss is located and the damage repaired.

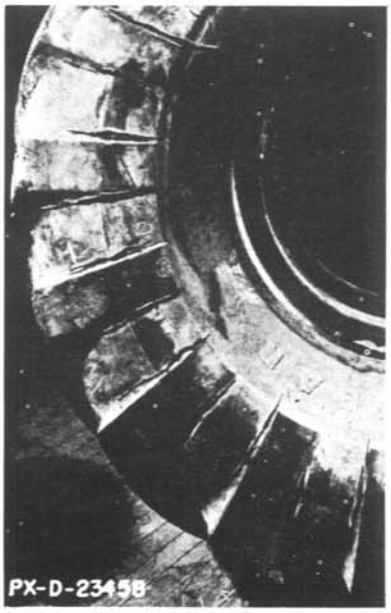

Underinflation causes rapid wear on the outer edges of the tread, as well as causing excessive flexing that builds up internal heat. Blow outs frequently result from this. Also, continued underinflation causes radial cracks in the tire walls as shown in the photograph at left.

Overinflation, on the other hand, causes rapid wear at the center of the tread and often leads to sidewall breaks due to impact loads. Should pressure build up during the day, it is advisable not to bleed the tires because the added pressure automatically compensates for heat generated during operations. This prevents sidewall flexing which would generate more internal heat.

The photograph at left shows a blow out caused by overinflation.

Cuts

All cuts should be inspected. Cuts that penetrate to the tire's cord body must be repaired immediately, or they will spread quickly, causing severe damage to the tire. Shallow cuts should be skived with a knife or bullnosed rasp to prevent small stones from becoming embedded in the rubber and working through the cords.

Rims and Flanges

Damaged rims and flanges should be checked carefully. If tires are dismounted for repair, the rims must be cleaned and painted to make mounting easier and to prevent rust damage. All oil or grease found on rim assemblies must be removed because it causes rubber to deteriorate quickly. It makes good sense not to park a vehicle overnight on a greasy or oily spot. Also, caked mud and rocks must be removed from tires, and especially from between rear-mounted duals.

Tire Wear

If uneven tire wear is detected, the cause should be located and corrected as soon as possible. Mismatched tires on dual assemblies result in unequal load distribution. The new, larger tire wears more rapidly, and the old, smaller tire usually scuffs severely. This can be avoided by mounting tires of the same diameter on dual assemblies. If it is necessary to use a slightly smaller tire, it should be placed on the inside position.

The condition of haul roads also affects tire life. Roads that are well designed and properly maintained may double or even triple haul speeds. Steep grades and sharp turns mean slippage and a shortened tire life. And loose or embedded rocks increase the chances of getting cuts in the tires.

Storage

Tires and tubes stored under the wrong conditions can age more quickly than those in daily service. Light, heat, oil, dust, dirt and moving air are responsible for deterioration. Here are some useful do's and don'ts of tire storage:

DO store tires in a cool, dry, dark area, that is protected from the wind. Cover tires with a tarpaulin if such an area is not

available. DO pile tires on a wood foundation to keep them off dirty, oily floors. Keep the same size tires together.

DON'T store tires in the same area with gasoline or lubricants. The rubber will absorb lubricant vapors and deteriorate rapidly.

DON'T place a large tire on a smaller one.

If tires are stored outside, protect them with a waterproof covering. It is essential to keep water and oil from the inside of the tire casing. A good way of doing this is to mount the tire on a spare wheel and to inflate it to 50% of operating pressure. The entire assembly then should be covered with a tarpaulin.

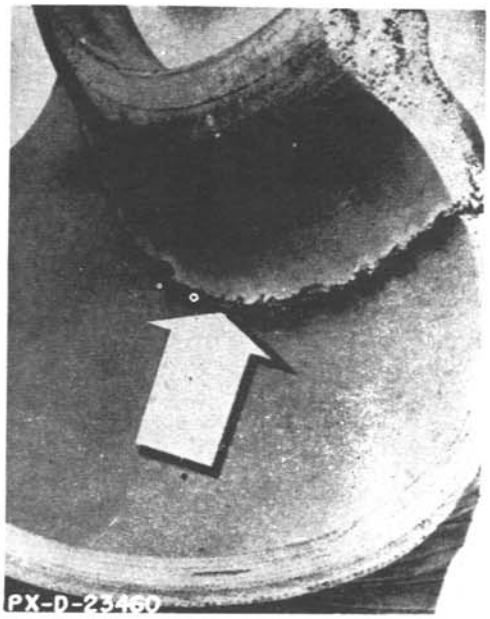

Here's another good thing to remember: There is a best time to buy tires to get longer tire life. The cooler a tire runs, the longer it will last. And tires that were bought in the fall and have run all winter have thinner treads and run cooler than new tires by the time summer comes around. New tires with heavier treads run hotter, wearing down about 30 per cent faster.

A careful watch on overloading is a must. A 20 per cent overload, for example, cuts expected tire life by 30 per cent. The ratio continues, until at a 100 per cent overload only 25 per cent of normal tire life can be expected.

* * * * * *

REDECKING FARM BRIDGES
(Suggestion R2-60-154)

During the redecking of farm bridges on the Friant-Kern and Madera Canals, Central Valley Project, California, it was necessary for the crews doing the work to pull 26-inch long curb bolts, 8-inch long spikes, remove and manhandle 3"x12" decking timbers, reinstall and secure the new decking timbers. Due to the bulky size of the timbers and the length of the bolts and spikes, the job was slow and tedious, taking a great many man-hours per job.

To facilitate the operations, Mr. Frank W. Athos, of the Fresno Operations Field Branch, Fresno, California, called upon his ingenuity and fabricated: 1. timber tongs for use with a power hoist to handle the heavy bridge decking timbers; 2. nail and bolt pullers

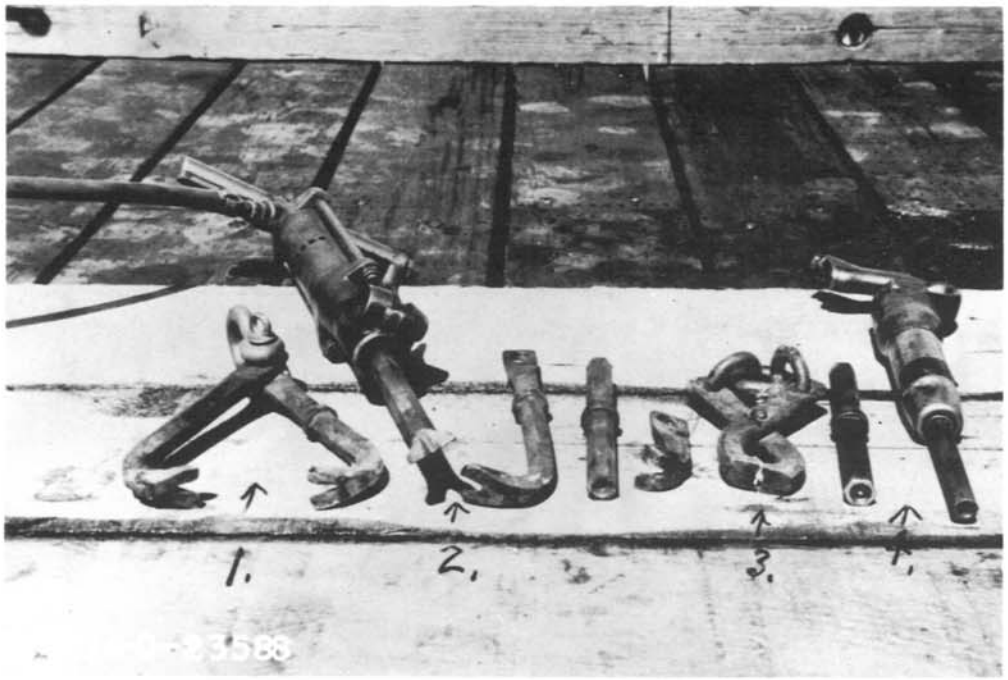

for use with a pneumatic paving breaker to loosen and raise the nails and bolts high enough to attach the tongs; 3. nail and bolt tongs for attachment to a power hoist to pull spikes and bolts after they had been loosened and raised with the pavement breaker, and 4. a nail driver for use with a chipping hammer to power drive the large nails and spikes into the bridge timbers. The individual tools are shown as numbered in the photograph above.

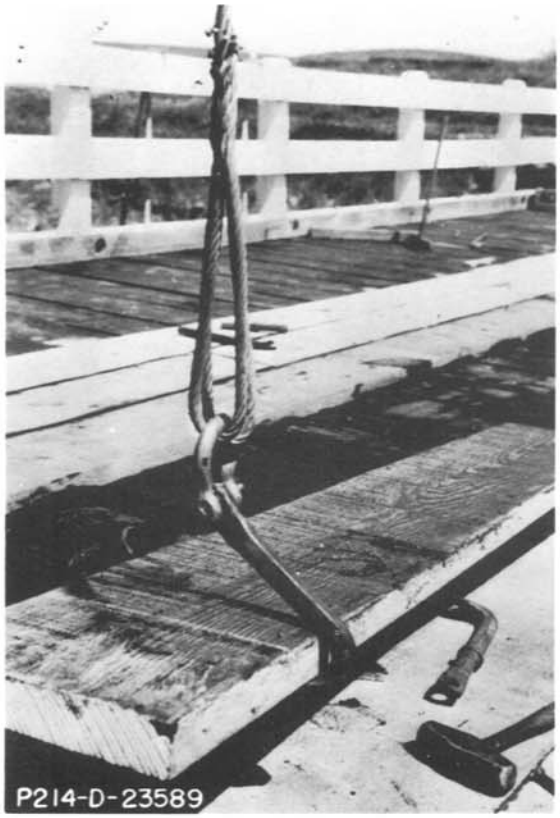

The tools made the job easier and safer, cutting the man hours ordinarily required to re-deck a 90' x 16' farm bridge from 450 to 340 man hours. Five bridges across the Friant-Kern Canal and two smaller bridges across the Madera Canal were re-decked. There are additional bridges to be re-decked and the various tools developed have filled a definite need.

Several photographs of the tools in use are shown in the following photographs. In the photograph at left, the timber tongs are shown attached to a cable hoist on a small

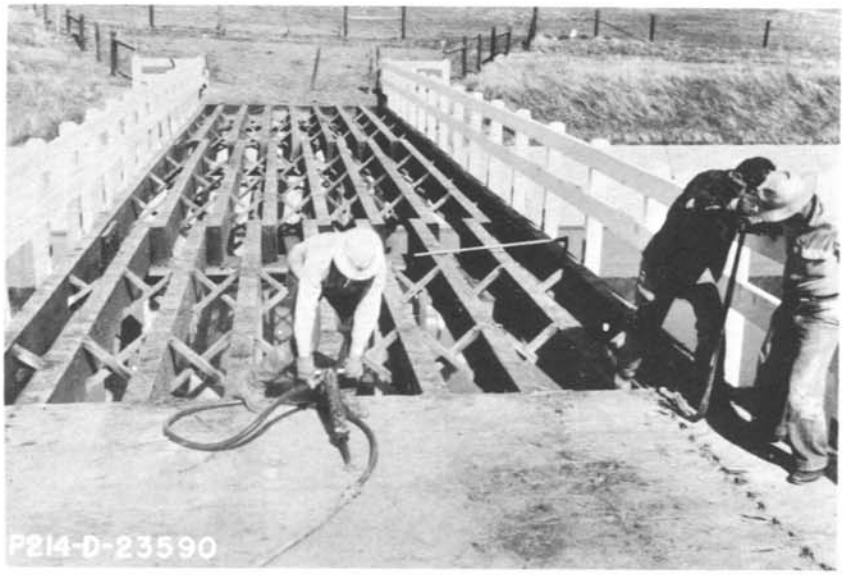
P214-D-23590

loader. Handling the heavy bridge timbers in this manner reduces chance of injury from heavy lifting. In the photograph at the top of the preceding page, the nail puller fabricated from drill steel to fit a 30-pound pneumatic paving breaker is shown. The bolts and nails were loosened and raised high enough to allow the nail and bolt tongs to be attached.

The photograph at the lower left shows the nail and bolt pulling tongs attached to the cable hoist of a loader in position to pull 26-inch long curb bolts and 8-inch long spikes after they were loosened and raised by the pavement breaker.

The photograph at the lower right shows the recessed tool steel made to fit a chipping hammer and used to drive 60d spikes and start 8-inch spikes. Larger drill steel was used with a 30-pound paving breaker to finish the driving of the 8-inch spikes.

* * * * * *

GPO 842503