LAST COPY - DO NOT REMOVE

Department of the Interior
Bureau of Reclamation

OPERATION AND MAINTENANCE EQUIPMENT AND PROCEDURES

RELEASE NO. 29

July, August and September 1959

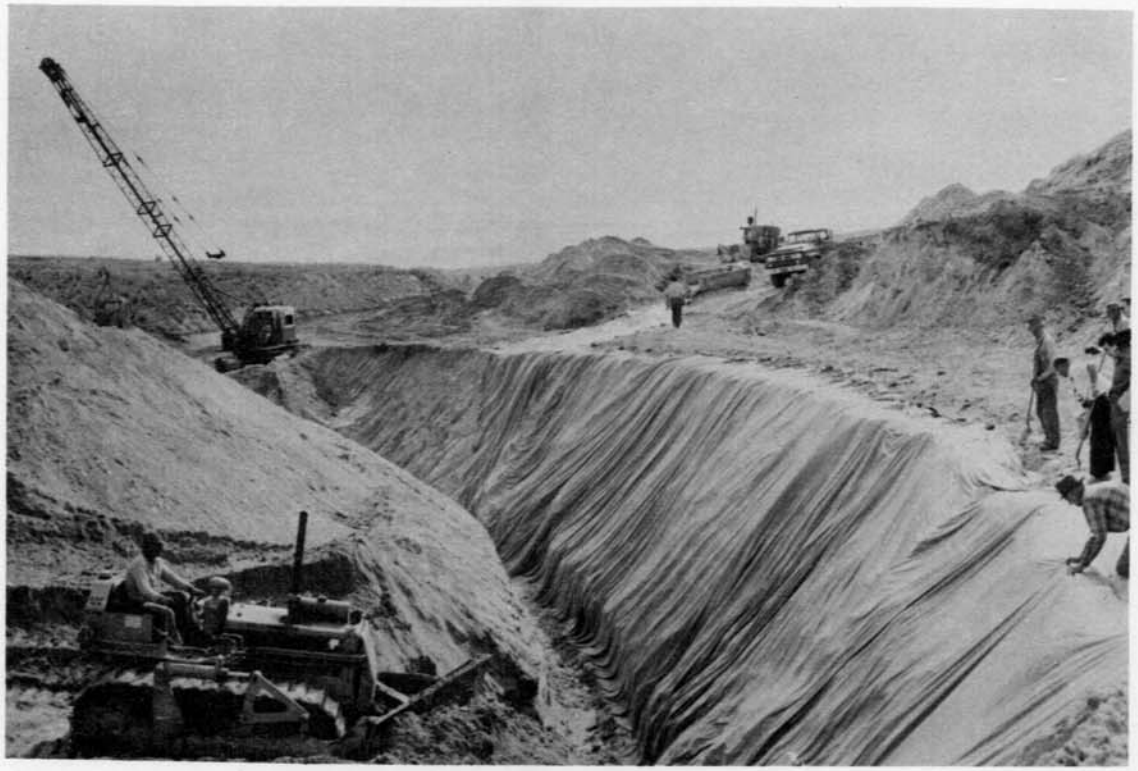

LAST COPY - DO NOT REMOVE

LAST COPY - DO NOT REMOVE

CONTENTS

Plastic Film Cutoff and Canal Lining
Land Corner Monuments
Dog Catcher
Automatic Weed Rack
Underwater Inspection Scope
Control of Algae and Black Fly Attachment to Concrete Flumes
Aluminum Markers for Transmission Towers
Spreader Box on Dozer Blade
New Compressor Adapted to Truck Mounting
One-man Ditcher
Concrete Bonding Agents
Base Plate for Current Meter Rod
Split-ring Collar Supports Operating Shaft
Clearing Floating Logs from Reservoirs

A plastic cutoff curtain is placed in a trench on the lower bank of a canal on the Boise Project, Idaho, to reduce seepage losses. P3-D-16092

OPERATION AND MAINTENANCE

EQUIPMENT AND PROCEDURES

Release No. 29

July, August and September - 1959

INTRODUCTION

A long needed and requested item is being forwarded with this issue--a subject index for the bulletin. It is stapled to the outside of the back cover so that it can be easily detached. The articles in this issue, Release No. 29, have been included in the index. It is contemplated that the index will be brought up-to-date and issued once each year with the second quarter release.

This bulletin, published quarterly, is circulated for the benefit of irrigation project operation and maintenance people. Its principal purpose is to serve as a medium of exchanging operation and maintenance information. Reference to a trade name does not constitute the endorsement of a particular product, and omission of any commercially available item does not imply discrimination against any manufacturer It is hoped that the labor-saving devices and less costly equipment developed by the resourceful water users will be a step toward commercial development of equipment for use on irrigation projects in a continued effort to reduce costs and increase operating efficiency.

To assure proper recognition to those individuals whose suggestions are published in this and subsequent bulletins, the suggestion number as well as the person's name is being given. All Bureau offices are reminded to notify their Suggestions Awards Committee when a suggestion is adopted.

* * * * *

Division of Irrigation Operations
Commissioner's Office
Denver, Colorado

PLASTIC FILM CUTOFF AND CANAL LINING

Two experimental installations of plastic film were made under the Bureau's Lower-cost Canal Lining Program this past spring (1959) as a part of the evaluation of plastics for such purposes. In one installation, as shown on the cover of this issue of the bulletin, the film was installed as a cutoff curtain in a trench excavated on the inside of the downhill bank of the canal prism. In the other installation, as shown below, the film was placed as a buried membrane.

Cutoff Curtain Installation

The "C" East Canal of the Payette Division of the Boise Project at the site of installation, is located on the side of a low hill, as shown at left, where the subgrade material generally is a sandy loam, but consists in some reaches largely of fine and coarse clean sands overlying a relatively impervious clay layer located approximately 14 feet below the bottom of the canal. High seepage through this section fostered the growth of willows

and tules below the canal and contributed to the general water-logging of adjacent irrigated farm lands.

The canal was originally designed with a 16-foot bottom width, a 6.95-foot normal water depth, and $1\frac{1}{2}$:1 side slopes. Considerable excavation would have been required to remove the existing subgrade material to provide a side slope of $2\frac{1}{2}$:1 on the upper bank, which is presently recommended, had buried membrane type canal lining been utilized for seepage control in this reach. For this reason, the decision was made to construct a nearly vertical cutoff barrier, as shown in the drawing on the facing page. The figure illustrates the work involved, showing the relative dimensions of the excavated trench, the location of the plastic curtain, etc. Field investigations indicated that it was approximately 28 feet from a point 18 inches above the normal water level in the canal to the top of the clay layer underlying the section.

Project forces constructed benches on the lower side of the canal with bulldozers, as shown in the photograph on the preceding page. The top of the bench was 18 inches vertically above the operating water level of the canal and was used as the working level for a dragline with a 1-cubic yard bucket, as shown at left. The cutoff trench varied from 26 to 28 feet in depth, with the slope of the upper portion being about 1/2:1, while the bottom portion was practically vertical.

Several samples of plastic materials were submitted to the Bureau's Engineering Laboratories in Denver, Colorado, for initial evaluation well ahead of the field installation. The most promising of these samples was selected by the manufacturer for the field trials from the test results supplied. Selected for the cutoff curtain was an 8-mil thick vinyl plastic. This material, prefabricated into a single sheet 30 feet wide and 400 feet long, was shipped to the site of the work in a wooden crate measuring 4 feet in width, 8 feet in length, and 2 feet in depth. A sample of the plastic used is attached below.

The plastic had been folded, using an accordion type fold 4 feet wide. In order to reduce the tension that would be inflicted upon the material in unfolding and spreading the 400-foot long single

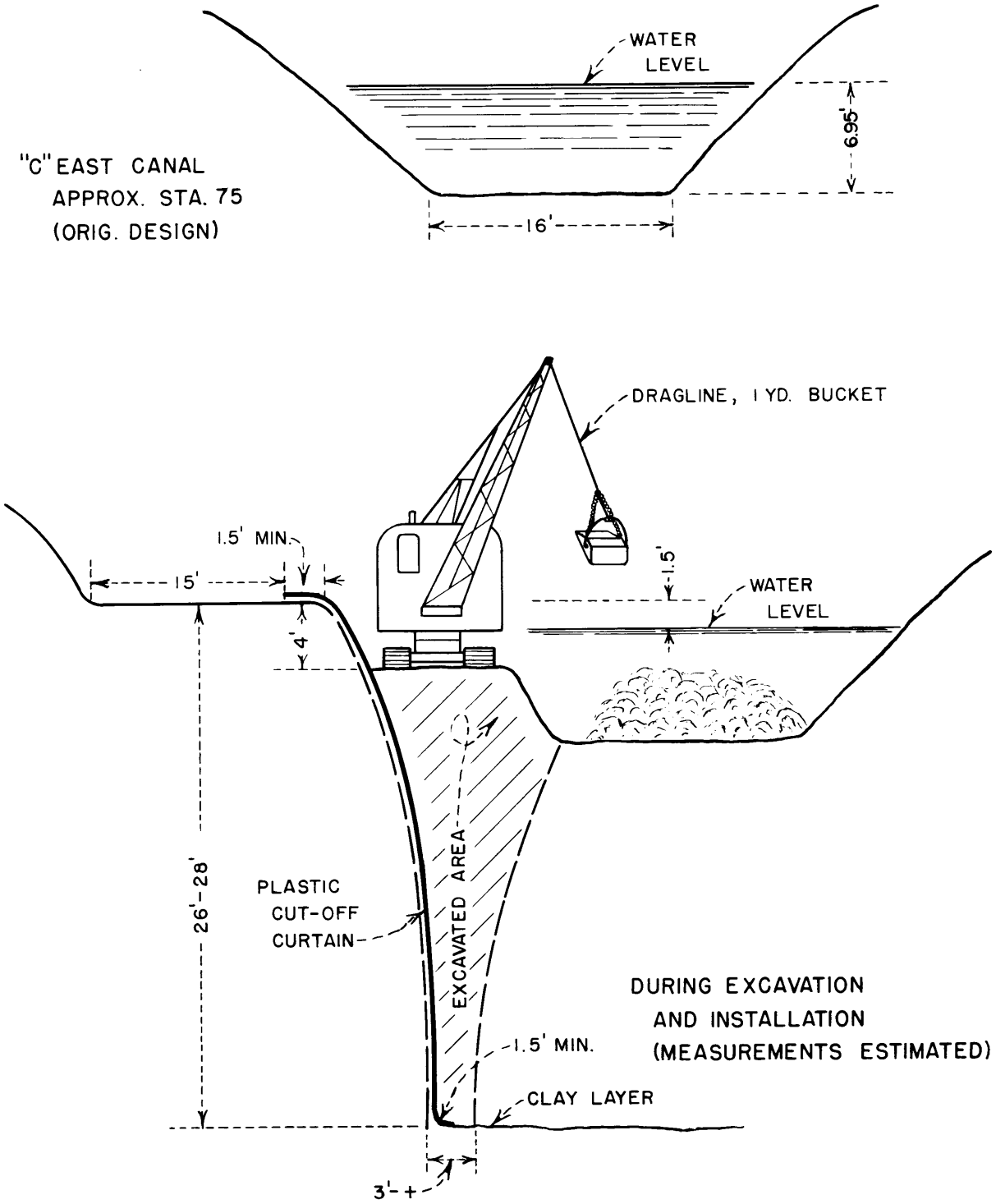

LOWER COST CANAL LINING PROGRAM (REGION I)

EXPERIMENTAL PLASTIC CUT-OFF CURTAIN INSTALLATION

BLACK CANYON IRRIGATION DISTRICT

NOTUS, IDAHO

FIGURE 3

sheet of plastic, it was decided to place the film near the center of the installation and unfold about one-half of the material upstream from that point first; later unfolding the remaining 200 feet in the downstream direction. Accordingly, after about half of the excavation had been completed, the film was spread on the upstream reach, as shown at left, by 8 men in a simple and rapid operation. It was then lowered into the trench gradually, until approximately $1\frac{1}{2}$ feet of the sheet remained at the bench level. This allowed for ample material in the bottom of the trench on the clay layer.

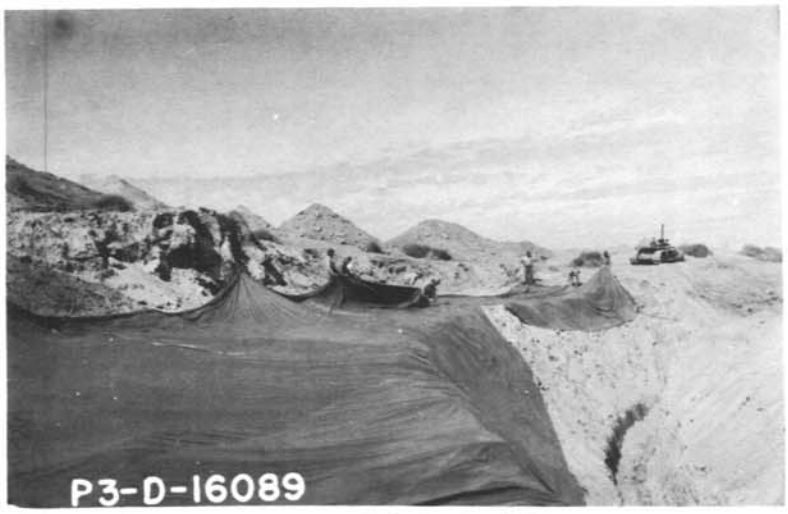

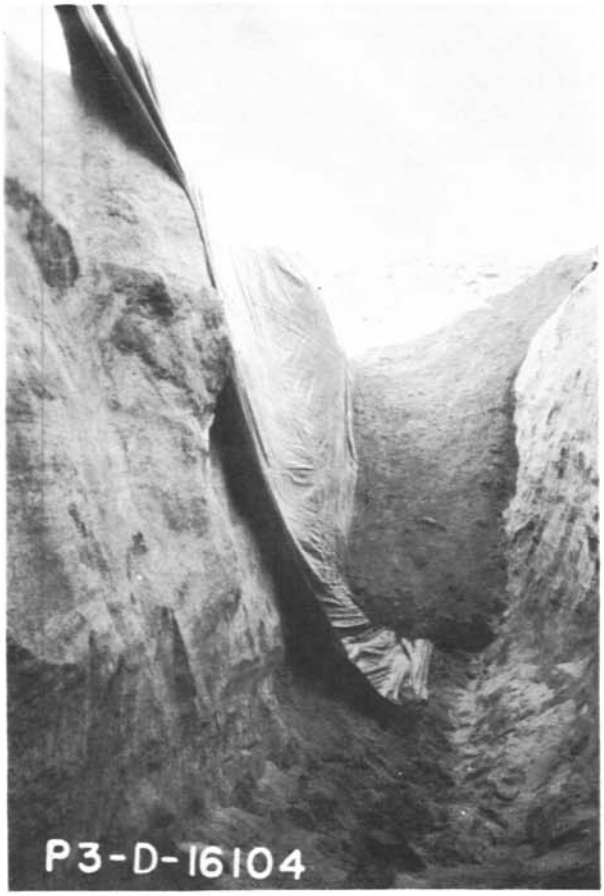

To minimize the possibility of water getting under the plastic, a shallow trench about 1-foot wide and 1-foot deep was cut into the bottom and side of the trench, and the curtain was securely anchored in the trench.

Close examination failed to reveal any tears or rips due to the unfolding or placement; however, some of the nailheads used in the fabrication of the shipping crate punctured the material in transit and these had to be repaired on the job. This was accomplished effectively and simply with a liquid adhesive applied to the surface of the plastic and application of a patch of the vinyl material.

In order to determine if the 8-mil thick material was strong enough to resist puncturing or tearing when placed over a rough subgrade, lower photograph above, the material was very closely observed during the backfilling operation, which was accomplished with a bulldozer. In

areas where there was undercutting which tended to stretch the plastic during backfilling, slack was provided as necessary by lowering the material slightly from the berm. It was then anchored at the berm with a hand placed layer of loose earth.

There was no evidence of punctures or tears, indicating that a plastic material with a relatively high tensile strength can be used over a rough subgrade without injury, providing the backfilling operation is carefully done and the backfill material does not contain sharp rocks or cobbles.

The previously stockpiled material from the trench excavation on the uphill side of the canal was gradually dozed into the trench. After the trench was completely filled, the cover for the film on the lower bank was worked up the slope, as shown in the upper photograph.

The entire job was accomplished in the period March 30, 1959, when excavation was started, through April 4, 1959, when the canal was placed in operation as shown in the lower photograph. It would seem the plastic has possibilities in emergency repairs of a canal during the operating season, as well as providing a more permanent cutoff of seepage losses.

Buried Membrane Lining Installation

The experimental buried plastic canal lining also was placed on the Payette Divison of the Boise Project in the "C" West Canal. This canal had a bottom width of 7 feet, side slopes of $1\frac{1}{2}$:1, and the normal operating water depth is 3 feet. The figure on the following page illustrates the method used in placing the lining in a 350-foot long reach of the canal.

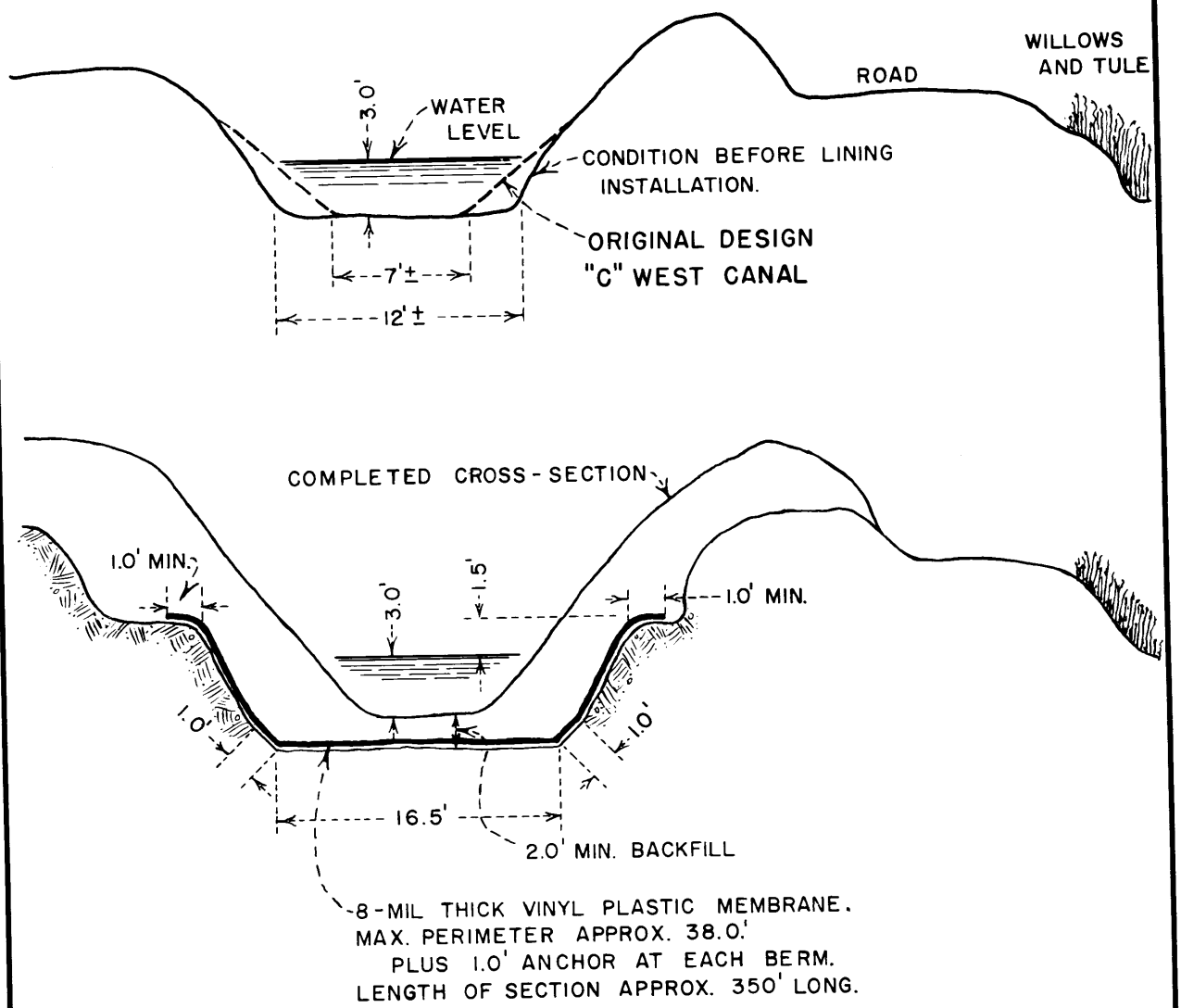

LOWER COST CANAL LINING PROGRAM (REGION I)

EXPERIMENTAL BURIED PLASTIC MEMBRANE INSTALLATION

BLACK CANYON IRRIGATION DISTRICT

NOTUS, IDAHO

FIGURE 5

A similar method of benching used in the cutoff curtain installation was employed for the buried lining installation as shown at left. The benches, about 10 feet wide, were leveled by dozers 18 inches in elevation above maximum water elevation in the canal, allowing ample freeboard. A dragline excavated the invert 2 feet below normal canal grade.

Cutoff trenches were provided at both ends of the reach to be lined, and the 8-mil thick vinyl plastic, identical to that used in the cutoff curtain installation, was placed over the canal perimeter, tucking the film into the cutoff trenches. It was held in place at the berm by hand placement of loose earth. This installation required a single sheet of the film that was 40 feet in width and 350 feet long.

The slopes of the canal were left essentially as excavated with the dragline. That is, no special trimming or rolling was performed although one pass with a motor patrol or grader, had there been one available having the mold board angled to trim the slope, would have produced a much better subgrade or base for the plastic at practically no cost. The sequence of operations is shown in the photographs below and on the following pages.

The plastic film, after removal from the shipping crate, was placed near the center of the reach to be lined and methods similar to that used in placing and handling the film for the cutoff curtain were followed. Since the installation was in a curved reach of the canal, some folding of the film was necessary on the inside of the curve.

The lining material was placed rapidly and without difficulty, as shown below, with the air temperature at 34 to 35 degrees F. and with the wind velocity up to 15 miles per hour.

It should be pointed out, as will be evident from the photographs, that the side slopes as excavated for the lining were approximately 1/2:1 in lieu of the $2\frac{1}{2}$:1 slopes used in previous installations of this kind. This was done purposely to reduce the amount of excavation necessary on the hillside location. One obvious advantage of placing the material over steeper side slopes is that the plastic membrane is buried far deeper at the toe of the slope than in the usual buried membrane installation, and therefore, less likely to become damaged during future cleaning operations with necessary heavy cleaning equipment.

Material excavated from the canal was used to cover the plastic membrane. Placement of the cover was accomplished by both dragline and dozer. In the lower photograph the cover material is being deposited on the membrane in the bottom of the canal. The cover on the bottom was spread to a minimum thickness of 2 feet. Side slopes were then replaced to the original $1\frac{1}{2}$:1, as shown in the photograph on the following page.

The buried membrane installation also was accomplished with a minimum of difficulty and in an entirely satisfactory manner as described. Cost of the 8-mil thick vinyl plastic, prefabricated and delivered at the site was estimated to be about $0.35 per square yard, although materials for both installations were donated for the work by the manufacturer which

among other manufacturers who have also furnished plastic materials for other installations, is experimenting with the development of products suitable for both exposed and buried plastic lining materials.

Several suggestions were made for improvement of packaging. It was suggested that a heavy cardboard carton would be preferable to the wooden crate, providing the plastic material is not too heavy or bulky. This was recommended to avoid damage and puncture of the film in packing, in transit, and in unpacking. If the heavy material or large piece of material is to be required, and a wooden crate must be used, a heavy cardboard or other suitable lining should be provided inside the wooden crate with special care given to the fastenings on the crate. It was also suggested that the plastic be folded each way from the center and also accordion folded from each end toward the center to facilitate unfolding in the area in which the lining is to be placed.

Mr. William B. Kays, the manufacturer's representative who assisted in the installation, recommends the use of an acrylic adhesive, if available, for patching the film.

The installations were cooperative efforts. The University of Idaho, located at Moscow, Idaho, and represented by Mr. Dave Hendricks, of the University Engineering Experiment Station, performed the preliminary field studies, under agreement with the Bureau of Reclamation. The preliminary work included coring and logging the materials in the field and measurement of seepage losses from the canal reaches. The University will, as part of a general cooperative agreement, continue to evaluate the installation over the next several years.

Arrangements for and the general coordination of the work was the responsibility of Mr. Homer Graham, the Bureau's representative on

the Lower-cost Canal Lining Committee in Region 1. Mr. John V. Walker, Project Manager, Black Canyon Irrigation District, with headquarters at Notus, Idaho, provided the necessary labor and equipment for the installations and generally supervised the work. Mr. William B. Kays represented the manufacturer and Mr. L. M. Ellsperman represented the Commissioner's Office, Denver, in the installation, and supplied the information and illustrations for this article.

* * * * *

LAND CORNER MONUMENTS
(Suggestion R2-59-58)

Preserving land corner markers is a problem in most cultivated areas and is no less a problem on the Klamath Project in northern California and southern Oregon, constructed by the Bureau of Reclamation, major portions of which are now operated by several water user organizations. A method of overcoming the problem is that of burying the land corner monuments. This, of course, introduces a second problem --that of locating the buried marker.

Burt Mitchell of the Klamath Project has suggested a method of burial and location that can eliminate the problems. He points out that land corner monuments can be buried in a capped pipe sleeve in cultivated areas to protect the marker from damage by farming operations; and that the buried monument can then be located by use of an aquameter, a device used in locating buried pipe lines.

The pipe, pipe cap and the bench-mark type monument are shown in the photograph above. Mr. Mitchell holds an aquameter, which quickly locates buried markers.

* * * * *

DOG CATCHER
(Suggestion R2-59-161)

A device for removing dogs or other small animals from canals is shown in the sketch below. The device was the suggestion of Donald J. Berry, Supervisory Engineering Technician, Tracy Operations Field Branch, Central Valley Project, California. The suggestion enables a ditchrider to remove animals from the water without the danger of being bitten.

In the operation of the concrete-lined Contra Costa Canal with its steep slopes of $1\frac{1}{4}$:1, it becomes the ditchrider's duty to rescue small animals which either accidently fall or deliberately jump into the water. They cannot escape from the canal because of the steep banks. Dogs are the most common animals that become trapped in this way. Previously a rope noose was used to extricate the animals, but this often took many tries, depending upon the skill of the ditchrider, before the animal could be caught. After the animal was pulled onto the canal bank the rescuer was exposed to attack by the frightened animal, especially when an attempt was made to remove the noose.

The device suggested is now in regular use along the Contra Costa Canal System. The two 5-foot sections are threaded together for use, fashioning the loop in the plastic covered cable. In extricating an animal the loop is placed around the animal's midsection and the cable is drawn tight, securing the excess cable to the cleat provided on the handle of the device. Upon removal, the cable can be quickly released.

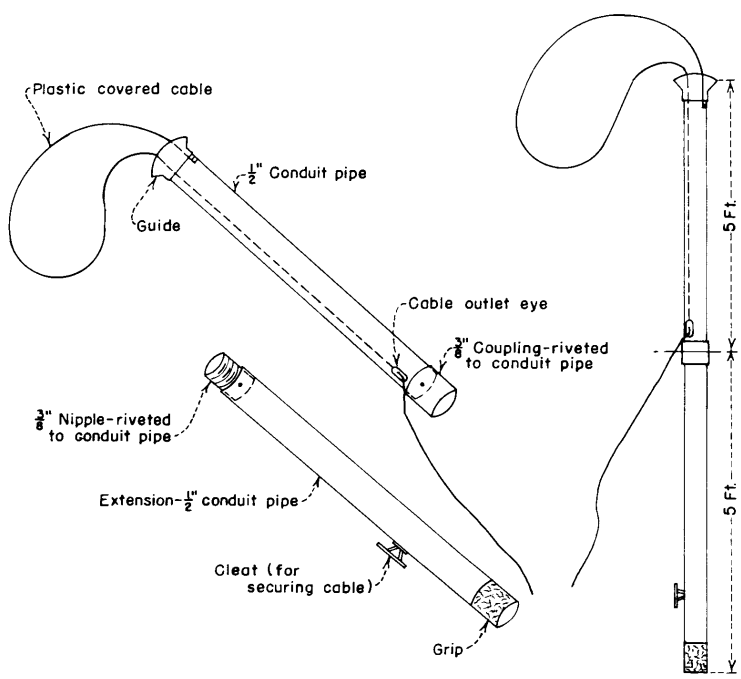

* * * * *

AUTOMATIC WEED RACK

"The Kennewick Division of the Yakima Project (Washington) probably has about the same floating debris problems that all of you have experienced," stated Mr. Van E. Nutley, Manager of the Kennewick Irrigation District, which operates and maintains the irrigation facilities recently completed by the Bureau of Reclamation. "Corrective devices include, among others, the usual canal fence weed traps and many sloping-pipe weed racks . . . However, the most troublesome spot on the canal is a siphon entrance which is also the entrance to a direct connected turbine pump."

"The Amon siphon and pump entrance, at mile 25, which takes all the main canal water (243 cfs), came equipped with a trash rack set on a 1:1 slope, with one-inch openings. With this rack absolutely clean, the average velocity through the one-inch slots approaches 5 feet per second. Nobody has to tell you what a little running algae; a few dead fish, and a 25-mile wind, to bring tumble weeds into the canal, will do to this structure."

Mr. Nutley was discussing the weed removal problems encountered in his operation of the irrigation system, at an Irrigation Operator's Conference in Boise, Idaho, February 18 and 19, 1959, and the installation of an automatic weed rack is shown in the photograph below.

Angle-iron bars moving upward by sprocket-driven endless chains, carry weeds to a conveyor which in turn carry the weeds to a pit which is provided to trap and burn the weeds.

The most troublesome spot to which Mr. Nutley referred was provided with a trashrack as shown on the following page during original

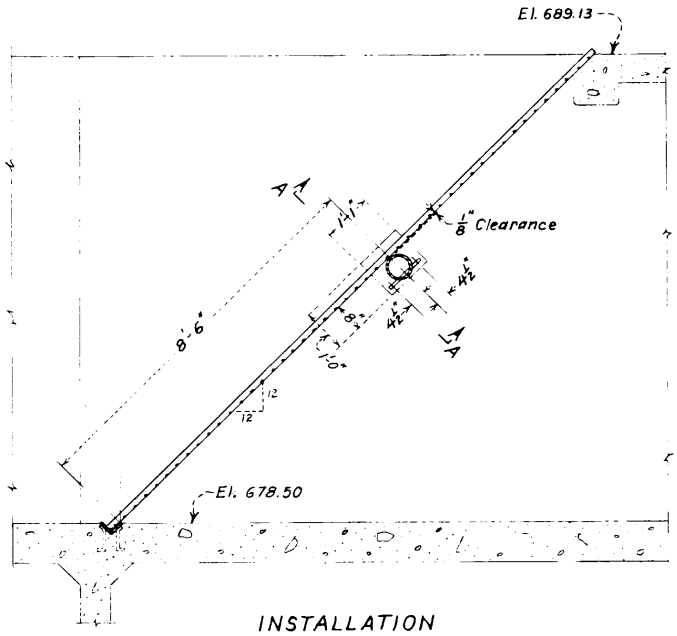

INSTALLATION

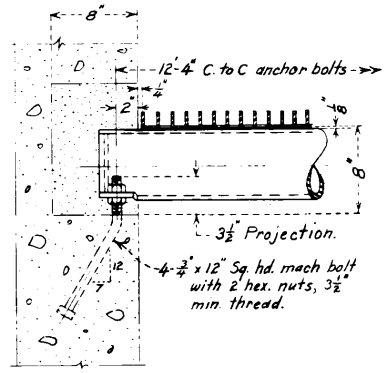

SECTION A-A

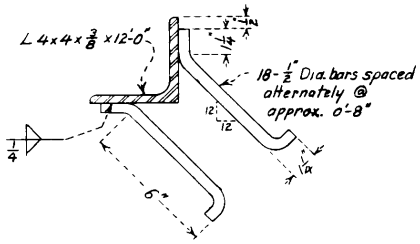

TRASHRACK SEAT
STRUCTURAL STEEL
ONE REQUIRED

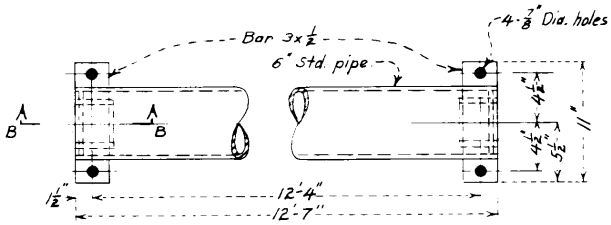

TRASHRACK SUPPORT
STEEL
ONE REQUIRED

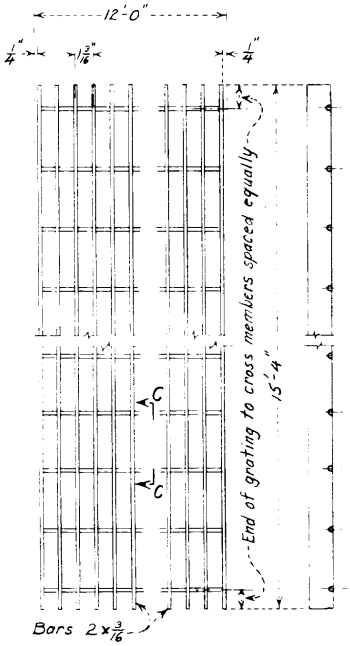

TRASHRACK
STEEL-GALVANIZED
ONE REQUIRED

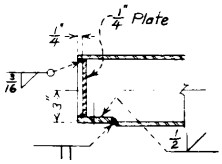

SECTION B-B

Cross members shall be not less than 1/16 square inch in cross sectional area.

SECTION C-C

NOTES

Grating panels shall be Type I welded steel galvanized grating conforming with Federal Specifications RR-G-661a and with bearing bar sizes and spacing as shown on this drawing.

Number of panels making up the overall width of trashrack to be determined by the contractor, but no panel to be less than 12 inches wide.

Total estimated weight ..... 2,900 lbs.

REFERENCE DRAWING

AMON SIPHON - INLET TRANSITION-TRASHRACK AND CHECK STRUCTURE 566-D-686

UNITED STATES
DEPARTMENT OF THE INTERIOR
BUREAU OF RECLAMATION
YAKIMA PROJECT
KENNEWICK DIVISION-WASHINGTON
MAIN CANAL STA. 1301 + 27.30 TO STA. 1322 + 61.31

AMON SIPHON
TRASHRACK-SEAT AND SUPPORT

DRAWN L.L.F. SUBMITTED C.W. Bennett
TRACED RECOMMENDED H.E. Rife
CHECKED W.H.T. APPROVED R.F. Sudradsen CHIEF MECHANICAL BRANCH

DENVER, COLORADO NOV. 16, 1954 566-D-718

construction. The rack was installed on a 1:1 slope and had one-inch clear openings between longitudinal bars which were supported by cross members at 4-inch centers. It was difficult and time consuming to prevent obstruction of the trashrack by weeds, moss, and debris. The close spacing of the longitudinal bars of the rack probably contributed to the problem, though the rack is necessary if the trash, etc., are to be kept from the pumps.

To overcome the problem, the irrigation district installed the electrically powered angle-iron drags, attached to endless link chains. These were operated from sprocket-driven pulleys on both sides of the rack. To date, the device has proved very satisfactory in removing weeds and debris from the rack and with additional modification proposed, will be even more efficient in operation.

Many of the ideas incorporated in the Amon siphon rack cleaning device were taken from a similar installation made to protect and clean a trashrack at the Grandview Irrigation District pumping plant on the Yakima Project. Mr. Oscar Hanby, an operator at the Chandler Power Plant, built the Grandview device. The Amon installation, as shown in the sketch on the following page, consists of a rigid steel frame supporting a lengthened standard Bureau trashrack, which is cleaned by $3\frac{1}{2}$- by $3\frac{1}{2}$-inch angles connected on each end to moving chains. The cleaning angles move about 5 feet per minute.

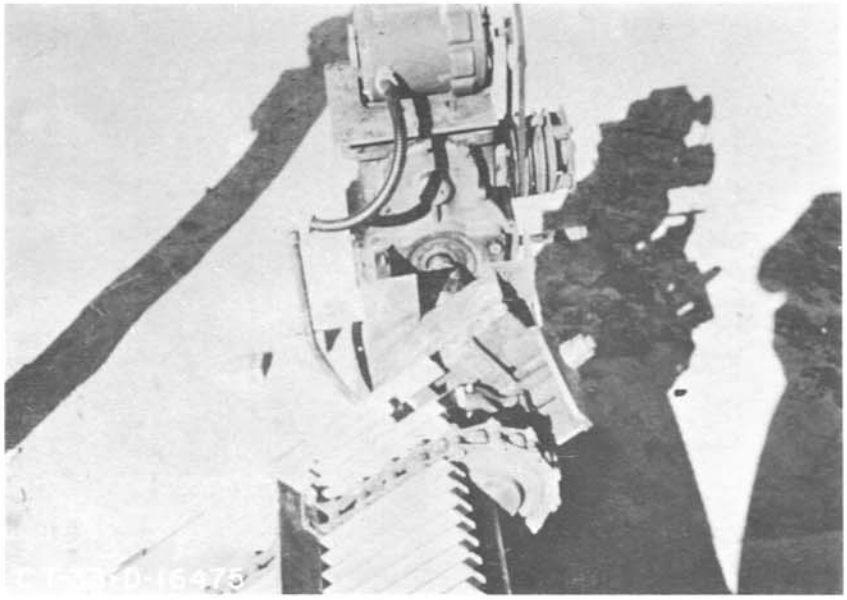

As shown in the photograph above, a 1/4-hp motor provides the power through a stoker gear box and a 1-3/4-inch steel shaft at the top of the rack. The upper bearings are connected to the frame in such a manner that they are adjustable to allow taking slack out of the chain.

BILL OF MATERIAL

Single Phase electric motor $\frac{1}{2}$HP		
Gear box		
$1\frac{3}{4}$" shaft	12'-6"	one
$1\frac{3}{4}$" shaft	12"	two
6" x 6" ∠	24'-0"	two
6" x 6" ∠	12'-0"	six
2" x 2" ∠	12'-0"	one
4" x 4" ∠	12'-0"	five
Weed rack	12' x 5'	one
Weed rack	12' x 2'	one
10" Sprocket for $1\frac{3}{4}$" shaft		four
$1\frac{3}{4}$" bronze bearings		two
link chain		94'

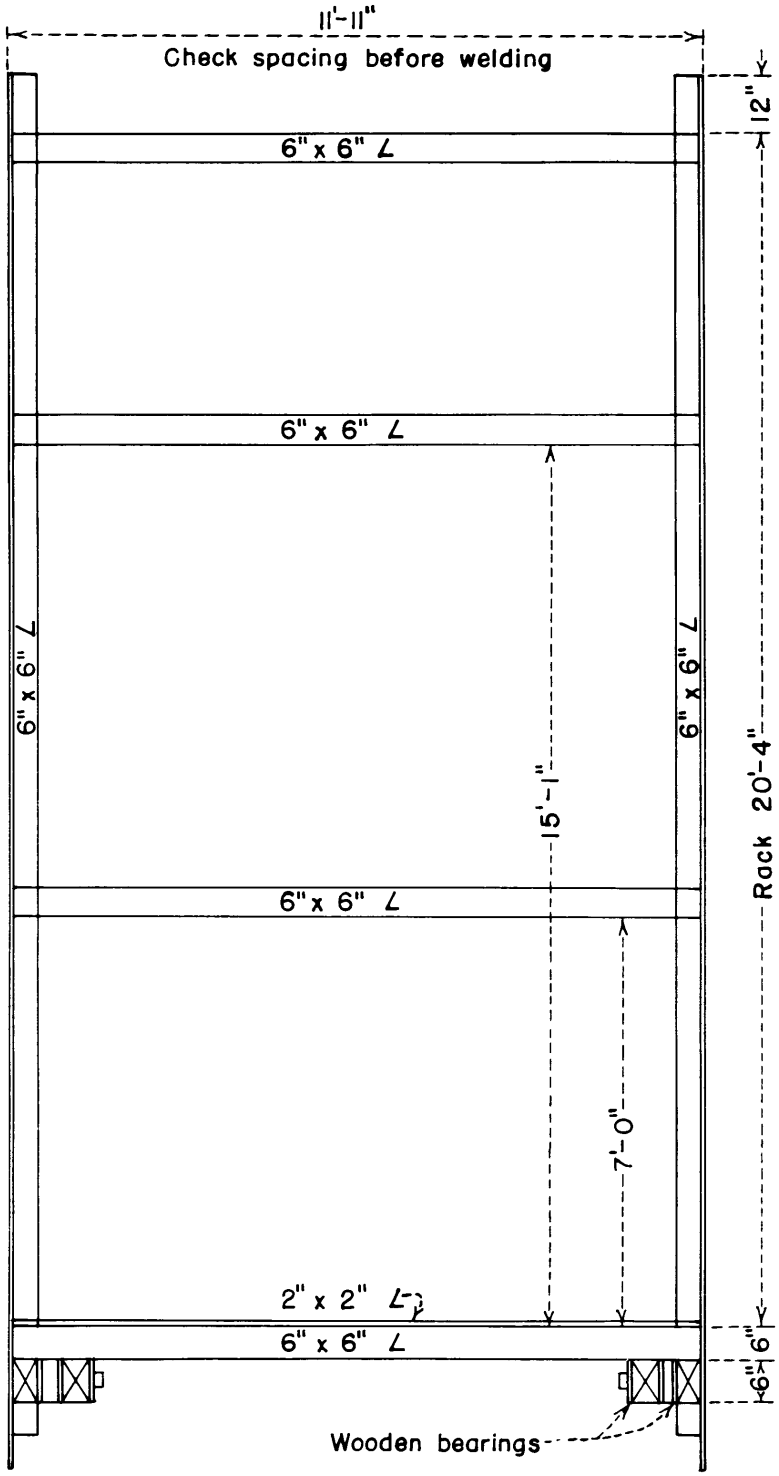

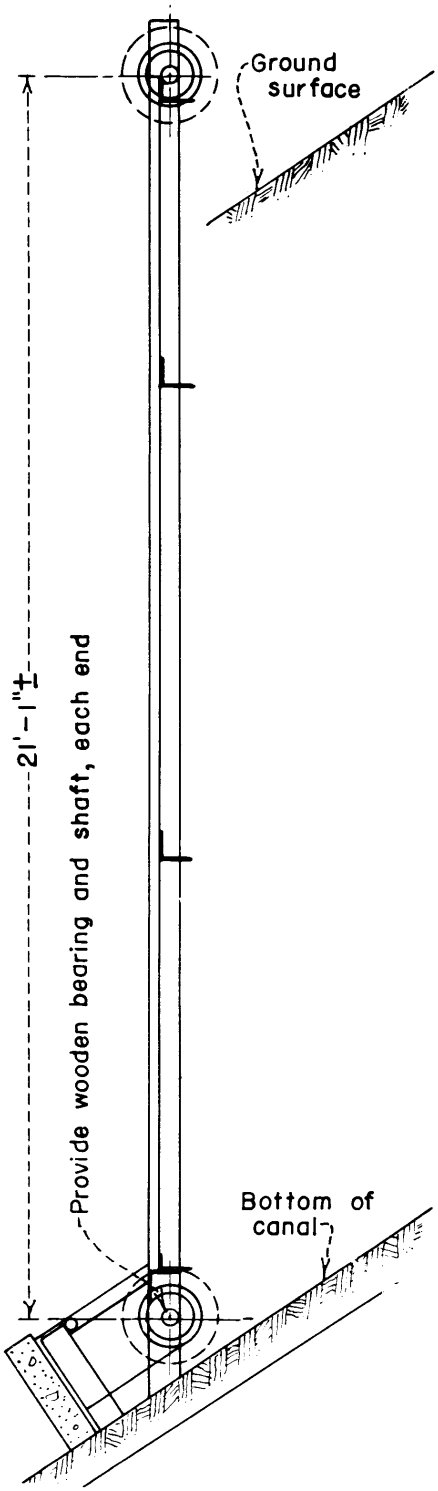

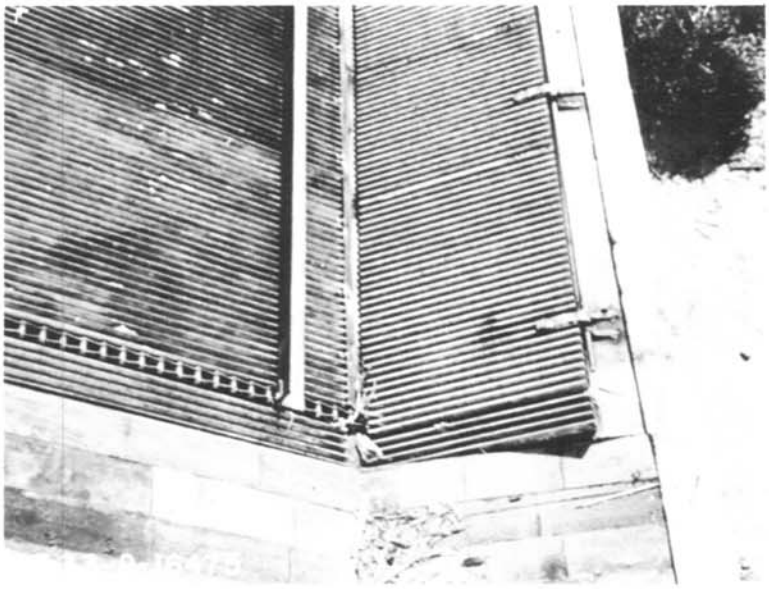

The lower sprockets are attached to the frame through hardwood bearings. These are highly recommended. At the canal bottom, a two-foot flap gate, shown at left, allows for passage of the cleaning angles. Prior to the installation of the device, the trashrack was remodeled so that the rack and cleaning device frame now rests on a $1\frac{1}{2}$:1 slope.

The automatic cleaning device can be improved according to Mr. Nutley and steps will be taken toward improvement as time permits. Suggested improvements include an extension of the trashrack at least 3 feet above the operating deck and possibly even a six-foot extension would be better. Sometimes, the flap gate which permits passage of the cleaning angles at the bottom of the canal becomes too heavy to be lifted when the screen is partially plugged with debris. This can occur particularly when the device has not been in operation for a period of time. Shortening the flap gate would improve this condition. It is also believed the spacing between the cleaning angles should not be more than five feet.

In summing up his discussion of the subject, Mr. Nutley stated, "The question is, of course, does it work? We believe that we saved the $2,100 cost of remodeling the structure the first year. It does a fine job of cleaning algae and floating moss and one night in four hours, during and after an 85-mile wind, we took enough tumble weeds from this trashrack to make a pile 20 feet wide, 12 feet high, and 100 feet long."

* * * * *

UNDERWATER INSPECTION SCOPE
(Suggestion R1-57-111)

The irrigation feeder canal on the Columbia Basin Project, Washington, carries water from the pumping plant headworks to the balancing reservoir and is full of water much of the year. The section below the radial gates cannot safely be drained without lowering the reservoir; in avoiding damage to the concrete lining which would result from hydrostatic head behind the lining, the section above the gates can only be emptied very slowly.

Experience with the canal has shown that occasional inspections are desirable, and much of this must be done with water in it. To avoid

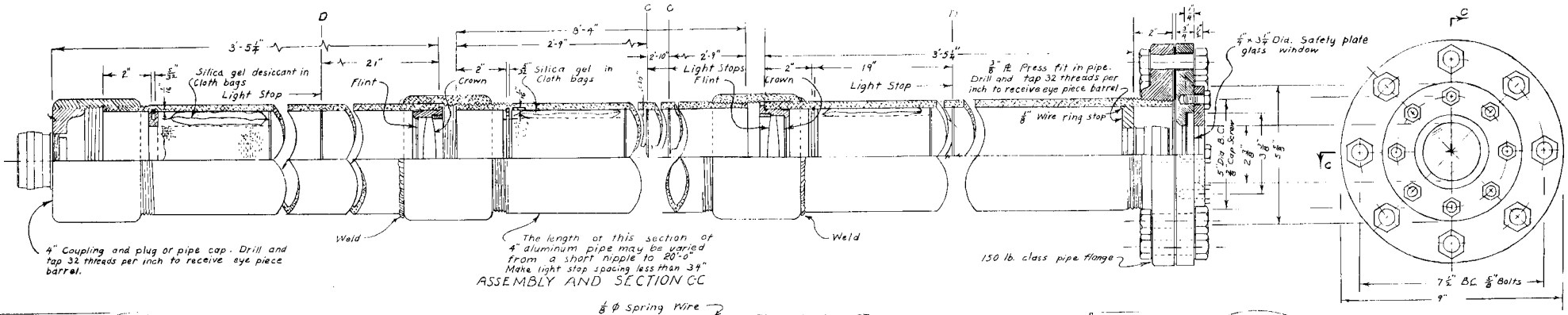

ASSEMBLY AND SECTION C-C

BOTTOM VIEW

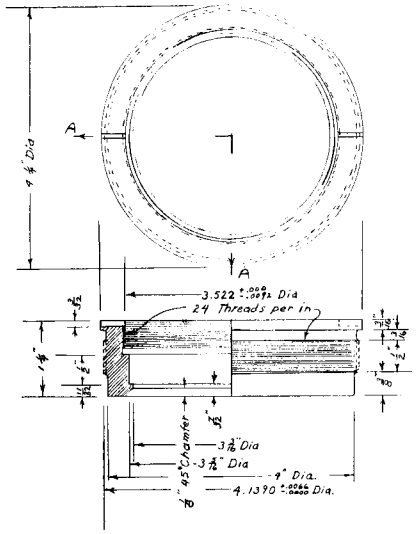

LENSE CELL
PLAN AND PARTIAL SECTION A-A
2 Required

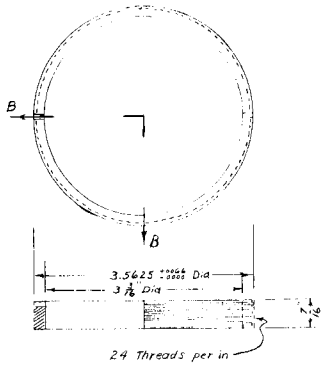

LENSE RETAINING RING
PLAN AND PARTIAL SECTION B-B
2 Required

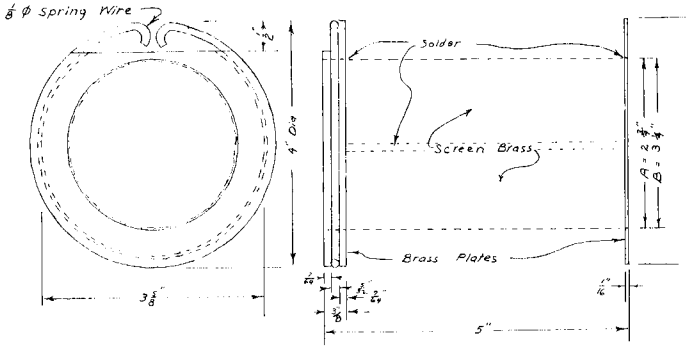

DEHYDRATING AGENT RETAINER
A 1 Required Screen Dia = 2 3/4"
B 2 Required Screen Dia = 3 3/4"

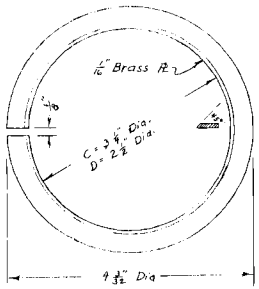

LIGHT STOPS
C 2 Required 3 3/4" Dia. bore.
D 2 Required 2 3/4" Dia. bore

NOTE
Paint all interior surfaces with dull black lacquer

UNITED STATES
DEPARTMENT OF THE INTERIOR
BUREAU OF RECLAMATION
COLUMBIA BASIN PROJECT—WASHINGTON

FEEDER CANAL
UNDERWATER
INSPECTION SCOPE

DRAWN HAF	SUBMITTED		
TRACED	RECOMMENDED		
CHECKED	APPROVED		
COULEE DAM, WASH. Mar. 24, 1955			222-117-13405

the necessity of employing divers, Howard D. Thomas, Engineer in the Power Field Division, with headquarters at Coulee Dam, Washington, designed a unique hydroscope which can be used from a small boat, but gives the inspector the advantage of seeing the bottom as it appears from the lower end of the hydroscope; that is, only three or four feet distant.

A shop drawing of the hydroscope is given on the preceding page. Briefly, the hydroscope consists of a 4-inch diameter aluminum pipe about 15 feet long with a lens system at each end equivalent to that of an ordinary telescope, but with the two arranged to face each other. This has the effect of moving the eye point the length of the tube, but results in no magnification. The field of view is 53 degrees so that a circle 4 feet in diameter can be seen at a distance of 4 feet.

The hydroscope weighs 80 pounds and is arranged to float vertically with the upper end two feet out of the water. On a normally bright day, no additional illumination is needed in water 20 to 25 feet in depth. With lights attached to the hydroscope, a clear view is possible at all times. Additional sections of pipe can be added in the middle section to adapt the device to deeper water.

Cost of constructing the hydroscope was about $325. The amount saved would be the difference between the cost of employing a diver for inspections and the cost of handling the equipment. One advantage is that the hydroscope is immediately available for use whenever any trouble is suspected, while a diver usually cannot be obtained for several days. Another advantage is that when a diver is used, he will often roil the water and impede the view by walking in the silt and mud found in the bottom of a canal.

Since the drawing gives no information on the lens system used, it should be noted that the eyepiece has a $1\frac{1}{4}$-inch focal length and is 54 millimeters in diameter. The telescope objective lens is a cemented achromatic 1016 millimeters (40-inch) in focal length, 83 millimeters in diameter, magnesium flouride coated. Variations can be used if the scope dimensions are changed.

As stated previously, visibility is increased by the addition of artificial light. In deep water the addition of a floodlight mounted near the lower end will supplement natural illumination. If further information is desired, write the Project Manager, Columbia Basin Project, U. S. Bureau of Reclamation, Ephrata, Washington.

* * * * *