HYD 85

MASTER
FILE COPY
BUREAU OF RECLAMATION
HYDRAULIC LABORATORY
NOT TO BE REMOVED FROM FILES

UNITED STATES
DEPARTMENT OF THE INTERIOR
BUREAU OF RECLAMATION

- - -

HYDRAULIC LABORATORY REPORT NO. 85

- - -

THE USE OF MODELS IN DESIGNING OUTLETS AT DAMS WITH PARTICULAR REFERENCE TO GRAND COULEE

by

J. E. Warnock

- - -

Denver, Colorado

July 1940

HYD-
FILE COPY
BUREAU OF RECLAMATION
HYDRAULIC LABORATORY
NOT TO BE REMOVED FROM FILES

THE USE OF MODELS IN DESIGNING OUTLETS AT DAMS WITH PARTICULAR REFERENCE TO GRAND COULEE

By

Jacob E. Warnock, M. Am. Soc. C. E.,
Hydraulic Engineer, Bureau of Reclamation,
Denver, Colorado.

In dams for flood control, power development, and irrigation, provision must be made for the release of water when the reservoir surface is below the fixed crest of the spillway. This release in excess of the normal flow through the powerhouse is necessary to prevent infringement of downstream water rights; to evacuate storage in anticipation of a flood; to prevent interference with fish migration; or to furnish downstream irrigation water.

With the development of larger structures, the problem of the design of these outlets has become more complex due to the increased head and larger quantities of water involved. In the case of the Grand Coulee Dam, the contrast between the original design of the 102-inch river outlets and the passages finally constructed exemplifies the work of the hydraulic laboratory in dealing with these increasing complexities. In addition, these studies have thrown light on adverse conditions in similar structures already in operation. In one case, an outlet through the spillway of a large dam developed an excessive seepage leak near the upstream end after operating only a few weeks. Improper shape and position of the entrance had caused severe cavitation and the loss of considerable material in the roof of the conduits. In another case, the spray from the outlets was so

excessive as to forbid release of water except in cases of extreme necessity.

How were these known faults to be corrected? How were other errors in assumption or design to be avoided? Precedent failed to be of assistance. There remained the expediency of developing a design step by step in models to prevent the recurrence of previous troubles and locate and eliminate any other difficulties. Viewed in retrospect, some of the findings appeared absurdly simple, but without the model approach, the questions would have remained unanswered.

At Grand Coulee Dam, sixty 8-foot, 6-inch outlets in tiers of 20 each have been provided to release 225,000 second-feet. The outlets were placed in pairs, 15 feet center to center, and in alternate 50-foot construction blocks. This arrangement was planned for construction economy in the trashracks in front of each pair of outlets and to allow the intermediate blocks to be used as floodways during construction. At Shasta Dam, a total of eighteen outlets of the same size will be provided in three tiers to release a flow of 63,000 second-feet. The model studies were originated for the benefit of Grand Coulee, but later it was found advisable to study the two installations as one problem, so that the tentative design for Shasta Dam is identical to that of the upper tier at Grand Coulee, except for the control feature, which is the subject of current studies.

Slide 1

On the preliminary drawings of Grand Coulee Dam, the outlets were rectangular in cross section; 5 feet 8 inches wide by 10 feet 6

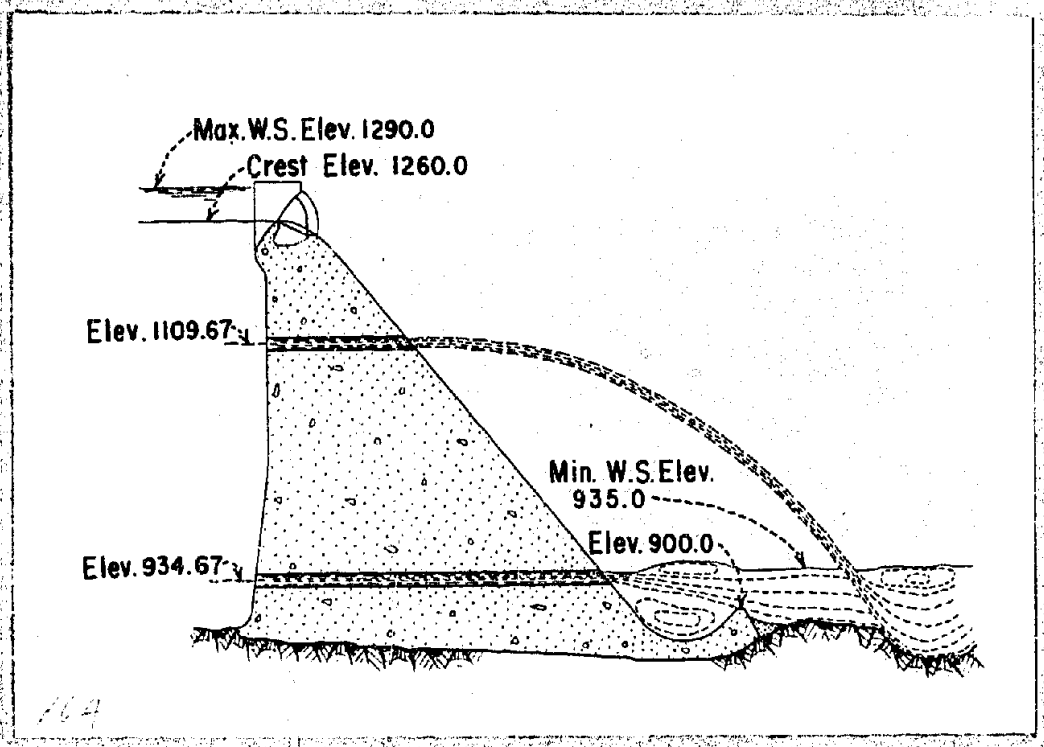

Figure 1 - Flow through Original Design of River Outlets for Grand Coulee Dam

inches high; longitudinal in plan; horizontal in section; and unlined. One tier of twenty outlets was at approximately elevation 935.00 and the other tier of twenty at elevation 1110.00. A 1:120 model representing the complete ultimate development and final design of the spillway bucket indicated that the jets from the lower tier would impinge on the water surface downstream from the spillway bucket, causing severe splash and erosion. The upper tier produced practically the same results except that the scour in the river was even more severe. The model showed extreme scour conditions, particularly along the riprapped

banks of the powerhouse tailraces. Due to these adverse conditions the outlet having a horizontal invert was abandoned.

Slide 2

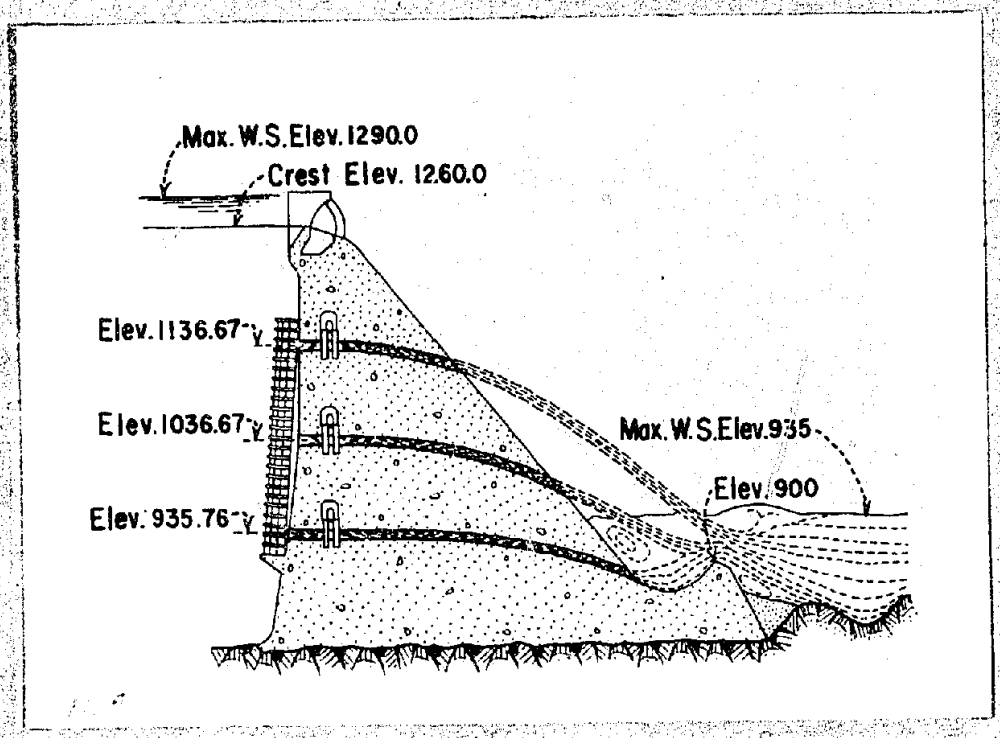

Figure 2 - River Outlets with Parabolic Profiles - Grand Coulee Dam

The cross section of the outlets was changed from rectangular to circular to improve the stress distribution around the conduits. The outlets were placed on parabolic paths through the dam so that the jets would plunge into the spillway stilling pool. The invert of the lower conduits was placed tangent to the spillway bucket, and the pairs of outlets diverged in plan to improve the energy dissipation. This resulted in the final design of the lower tier at Grand

Coulee except for a later development of the entrance to prevent subatmospheric pressures.

In these initial studies, no consideration could be given to conditions within the conduits because of their extremely small diameter in a 1:120 model. The model diameter of the outlets was only 0.85 inch.

While these studies were in progress, reports came from the Madden Dam in the Chagres River in the Panama Canal Zone, that a portion of the conduit roof in the outlets immediately downstream from the entrance had been destroyed after only a few weeks operation. Apparently the shape of the entrance was incorrect and the conduit was too near the floor of the reservoir. The combination of these two conditions caused subatmospheric pressures and cavitation in the conduits which eroded the concrete.

Slide 3

A series of investigations was instigated to develop an entrance for the Grand Coulee outlets which would avoid a repetition of these conditions.

A cylindrical pressure tank three feet in diameter and five feet long was constructed with a series of concentric distributing cones and a stilling rack to produce approach conditions similar to those on the prototype structure. A sharp-edged orifice was placed at the downstream end of the tank. The diaphragm in which the orifice was installed remained in a plane regardless of any distortion of the tank due to pressure changes. A 12-inch centrifugal pump with a

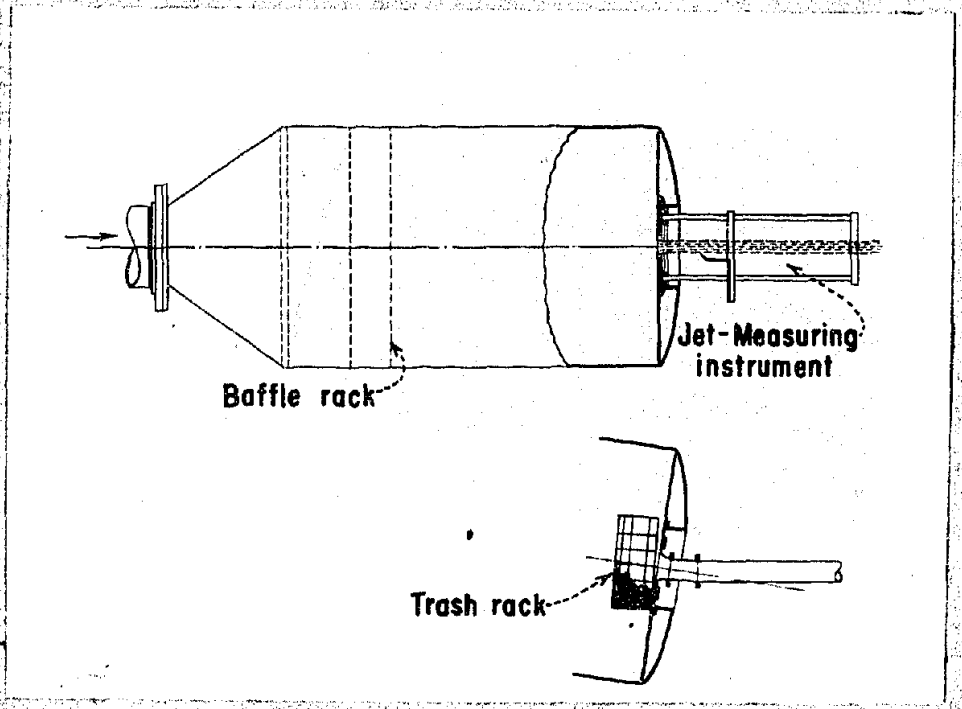

Figure 3 - Pressure Tank for Outlet Entrance Studies

capacity varying from 10 second-feet at 30-foot head to 5 second-feet at 100-foot head was installed to provide variable pressure and flow conditions. An instrument known as a "jetometer" was designed and constructed to measure the shape of the contracting jet as it issued from the orifice. A detailed survey of the jet with the instrument produced results which, in equation form, indicated that the entrance should be formed by rotating the ellipse $\frac{x^2}{1.50^2} + \frac{y^2}{0.45^2} = 1$ about its major axis of symmetry. The slope

of the upstream face of the dam was vertical at the entrance to the upper outlets, 0.05 to 1 at the intermediate outlets, and 0.15 to 1 at the lower outlets. The position of the control gates for the outlets had been established previously. With these limitations, a bellmouthed entrance with a converging elbow was developed. A model, using these details, was installed in the pressure tank in place of the orifice, and detailed pressure measurements made to check the validity of the approach to the problem. The pressures throughout the bellmouth and converging section were above atmospheric, which indicated that no adverse pressures conducive to cavitation would occur in the prototype.

To study the effect of the simultaneous operation of the outlets in a pair, two of the bellmouths with their converging sections were installed in the test tank and the pressures measured. The effect was to reduce the pressure in the bellmouths slightly on the sides farthest from the axis of symmetry of the dual outlets. This pressure decrease was due to the increased contraction of the jet at that point caused by the lack of symmetry of approach. The change, however, was not of sufficient magnitude to cause subatmospheric pressures.

Since the trashrack structure might affect the entrance pressures, particularly in the case of the lower outlet due to the proximity of the base, the study of the entrance was not considered complete until this factor was examined. The structure was installed in the hydraulic

model so that it could be moved vertically through a distance equal to the spacing of the horizontal ribs. The study revealed that the position of the bottom of the trashrack was the most effective factor, while the effect of rib placement was negligible. A decrease in pressure along the top of the entrance resulted, when the bottom of the trashrack was moved toward the opening. The chosen position gave positive pressures in the entrance and the velocity distribution was such that no trouble should occur downstream. Slide 4

Prior to the acquisition of the pumping equipment for the study of the outlet entrance, the investigation of the hydraulic behavior of control gates in the laboratory had not been feasible due to lack of high-pressure equipment. The design for the Norris Dam penstock inlet tractor gate was being developed at the time the high-pressure pumping equipment was installed and advantage was taken of these new facilities by building and testing a scale model of the proposed tractor gate and hoisting mechanism. During these tests, the presence of a greatly augmented downward force was noticed when the gate leaf was approaching the closed position or during the first portion of the opening cycle. The fundamental cause of this excess downward force was difficult to explain in the beginning and the correct solution was not found until the preliminary designs for the paradox gates in the lower outlets at Grand Coulee were well advanced.

The control gates for the lower outlets at Grand Coulee are of two types. The upstream or emergency control is a ring-follower gate operated by a hydraulic piston. The downstream or service control is a paradox roller gate operated by motor and gear train connected to

the gate stems. The gate leaves in the two types are fundamentally alike in that each has a follower ring at the bottom which comes into position when the gate is fully open, making the conduit an unbroken passage through the gate section.

When the model gates were operated, the force required to lift the gate at small openings was greatly in excess of the dead weight of the gate. When reversed in position, the gate leaf floated and required a downward force to close it. Analysis of the pressure data showed that as the gate leaf normally descended toward the closed position, the top of the leaf was subjected to full reservoir pressure over its projected area. At the same time, the high-velocity jet passing through the constricted area between the partially closed leaf and the oppositely curved lower surface of the conduit produced a negative pressure over an area essentially equivalent to that subjected to full static pressure above. These two pressures produce a downward force upon the leaf and stem which has become known as "down-pull." Hydraulic balance was reestablished to a large degree by providing a vertical intercommunicating passageway behind the leaf in the gate bonnet and frame which allows the excess pressure above the leaf to escape into the top of the conduit downstream from the gate.

The results of these tests alleviated a condition which in the prototype would have been the source of much grief in operation. A field of investigation was opened which has since been very active

and will continue to be so far into the future.

Summarizing to this point, the upper end of the lower outlet for Grand Coulee had been satisfactorily designed using a 1:17 model and the pressure tank; the lower end had been satisfactorily developed on the 1:120 model of the entire spillway structure, but no studies had been made of the performance of the conduit between the entrance and the exit. There appeared to be no reason to question the pressure distribution within these conduits since they will discharge at all times below the tailwater surface and hence would be subjected to positive pressure during any flow condition. There were some misgivings as to the behavior of the outlets in the two upper tiers which discharged into the air.

A pipe of the correct inside diameter and formed to the proper profile for the lower outlet was installed on the 1:17 model of the entrance and control gates and routine tests completed. The pressure gradients throughout the conduit with the correct tailwater were above atmospheric pressure, as had been expected. When the model was operated without the tailwater to simulate the conditions in either of the upper tiers, the results were startling. Subatmospheric pressures prevailed in the model which, when converted to prototype, would have caused absolute pressure through a considerable length of the conduit. This condition indicated that severe cavitation would have occurred in the prototype, hampering or even completely preventing successful operation.

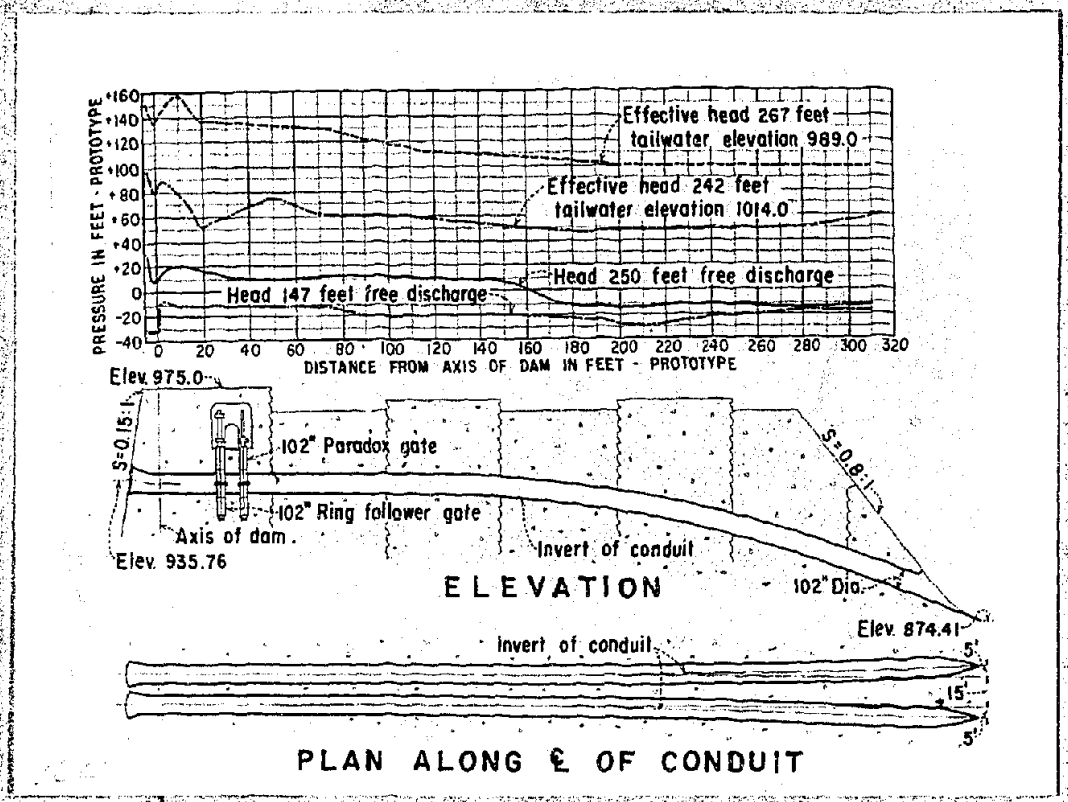

Figure 4 - Pressures in Final Design of Lower Outlets with and without Tailwater - Grand Coulee Dam

Apparently the original designer had overlooked the fact that the frictional losses in the conduit were insufficient to overcome the accelerating force due to the slope of the conduit.

The results of the pressure studies gave convincing proof that the outlets with parabolic profiles would not function properly in the two upper tiers without considerable revision at the downstream end to maintain positive pressures throughout the conduits during normal operating conditions.

As positive pressures within the outlet would force water through any existing cracks in the concrete and probably cause damage to the face of the dam, it was decided to line the conduits in the middle and upper tiers with steel plate. Future studies were made on that basis.

Another condition which required further study was the formation of spray on the face of the dam. The canyon wall outlets at Boulder Dam demonstrated that the friction of the jet with the surrounding air created a dense spray which was carried up the canyon toward the powerhouse, causing undesirable conditions and some actual damage. Slide 5

The subsequent redesign of the conduits for the middle and upper tiers at Grand Coulee was then based on three factors:

1. Prevention of subatmospheric pressures within the conduits.
2. Minimizing the formation of spray.
3. Minimizing the river bed erosion.

The hydraulic behavior through the entrance and gate sections had been carefully checked and found above question. The ideal solution for the conduit between the control gates and the face of the dam was

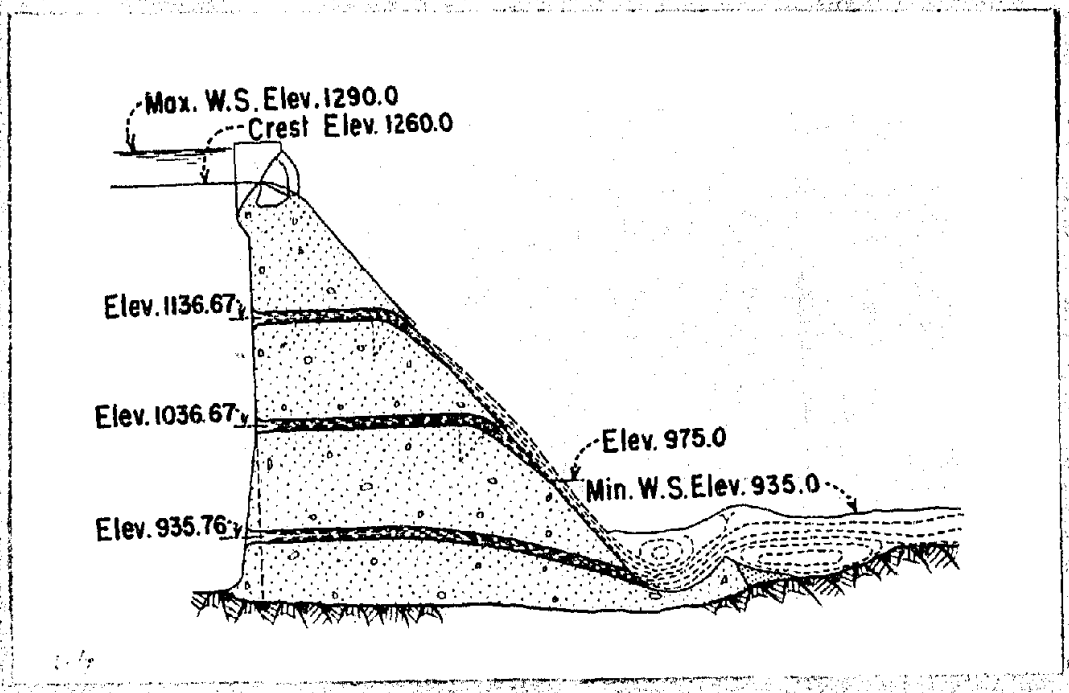

Figure 5 - Flow through Final Design of Grand Coulee River Outlets

to bring the outlets through the dam on a horizontal profile and introduce an elbow at the downstream end, forcing the jets to flow parallel to the face of the dam. A reduction of area in the elbow would reduce the discharge, thus decreasing the velocity and increasing the pressure throughout the conduit; the jets flowing down the spillway face would be less conducive to the formation of spray than those falling freely through the air; and the river bed erosion would be minimized since the bucket at the toe of the dam would function as an energy dissipator for the outlets as well as for the spillway. The

elbow indicated in the ideal solution would have protruded beyond the spillway face, causing severe disturbance when the spillway was operating. Hence, the practical solution required a compromise between the two flow conditions.

Simplicity of design and prevention of the undesirable conditions indicated the logic of placing the conduit on a horizontal profile with a short-radius elbow at the downstream end to cause the high-velocity jets to discharge nearly parallel to the face of the spillway. The proximity of the elbow to the face of the spillway was determined by the thickness of material necessary for structural purposes.

If the elbow on this horizontal conduit were omitted, allowing the jet to discharge into the air, subatmospheric pressures would be eliminated. Therefore, the problem had been reduced to the designing of an elbow with a constriction to maintain the positive pressures in the conduit, and an exit channel in the face of the spillway, which would minimize the spray and the river bed erosion.

The length of open channel in the spillway face in the case of the intermediate outlet was limited, since the concrete in the prototype structure had been poured to elevation 975 when the difficulties were discovered in the parabolic design. The issuing jet could not be placed on a trajectory in this short distance; furthermore, it was desirable to make the opening in the spillway face as short as possible to minimize interference with the spillway flow.

Mathematical analysis of the flow showed that the percent of

area reduction required to maintain positive pressures in the conduit increased as the static head on the outlet entrance decreased. This made it necessary to establish a minimum head under which the outlets would normally operate. After consideration of the downstream flow demands, this head was fixed at 40 feet, with the understanding that, if proper caution were exercised, the restriction of head could be waived during the construction period when the outlets were used for diversion of floods and maintenance of the reservoir surface at given elevations for construction purposes.

Slide 6

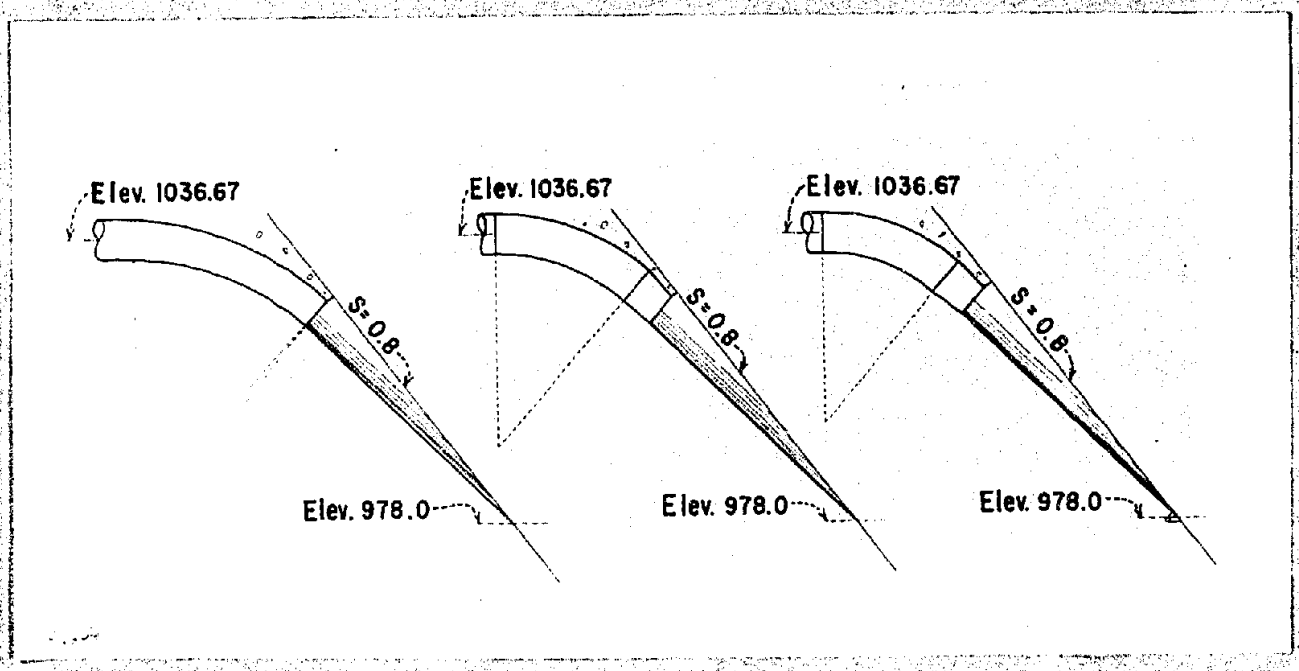

Figure 6 – Steps in Design of Elbow and Constriction

Since a sudden change in the alinement of a conduit may cause unfavorable local pressure distribution, the reduction in area in the first trial was affected by converging the crown of the elbow onto the invert. By making the necessary assumptions in Bernoulli's equation, the area of the exit end of the elbow was estimated to be 38.48 square feet as compared to an area of 56.95 square feet at the upper end, or a reduction of 32.43 percent. A minimum distance of three feet was established between the elbow and the face of the dam to allow for placement of reinforcing steel in the concrete. The invert of the open-channel portion of the outlet was made circular in cross section and tangent to the invert of the elbow.

The pressures in the elbow were above atmospheric, but the discharge was materially decreased. Fins of water formed on both sides of the jet in the upper end of the open trough, which was objectionable because of the spray released and the unpleasant appearance which would result when all forty outlets were discharging.

In an effort to prevent the formation of these fins, the open channel was formed as before at the upper end, and warped to a flat surface at the intersection with the face of the dam. The fins persisted and the pressures on the invert at the lower end were extremely low.

Excessive cost of fabrication and installation was foreseen in the construction of an elbow with a constantly reducing cross section. A constant-section elbow with a reducing cone on the end would elimi-

nate these difficulties. Assuming the loss in head to be the same in either case, the latter was preferable.

The constant-reduction elbow was abandoned in favor of an elbow with a constant section and an oblique conical frustrum on the end, the reduction in area being 25.64 percent. As it seemed logical to keep the invert of the outlet on a smooth surface, with no sudden changes of direction, the crown of the cone was converged onto the invert. On the supposition that the fins were caused by pressure exerted on the jet by the channel sides, the open channel was diverged in section to relieve this pressure. The invert of the apron was made circular in section at the upper end, terminating in a flat section at the lower end.

The resulting pressures in the elbow and cone were of sufficient magnitude to allow an increase in the exit areas, but the objectionable fins still occurred on both sides.

The exit channel was changed to include a constant cross section with a circular invert for a distance of 22 feet, terminating in a flat section at the lower end. With a head of 250 feet, the fins extended a distance of 30 feet from the dam.

The results of the latter design indicated that the fins were caused by excessive pressure on the invert, rather than on the sides, as originally assumed, and the pressures were due to the slight downward component of velocity caused by converging the crown toward the invert.

To relieve the pressure at the upper end of the apron, the conical

frustrum was made symmetrical about the center line of the [illegible]. This formed a slight, but definite, break at the intersection of the frustrum with the open channel.

Since the fins did not form, it was reasonable to conclude that the bottom pressures caused the water to be forced out to a region of lower pressure on the sides, thus causing the fins. Subatmospheric pressures were expected in the region immediately below the junction between the end of the cone and the beginning of the trough, but due to the urgent need of supplying the mechanical section with details for completing the prototype design, these pressures were not studied until later.

Slide 7

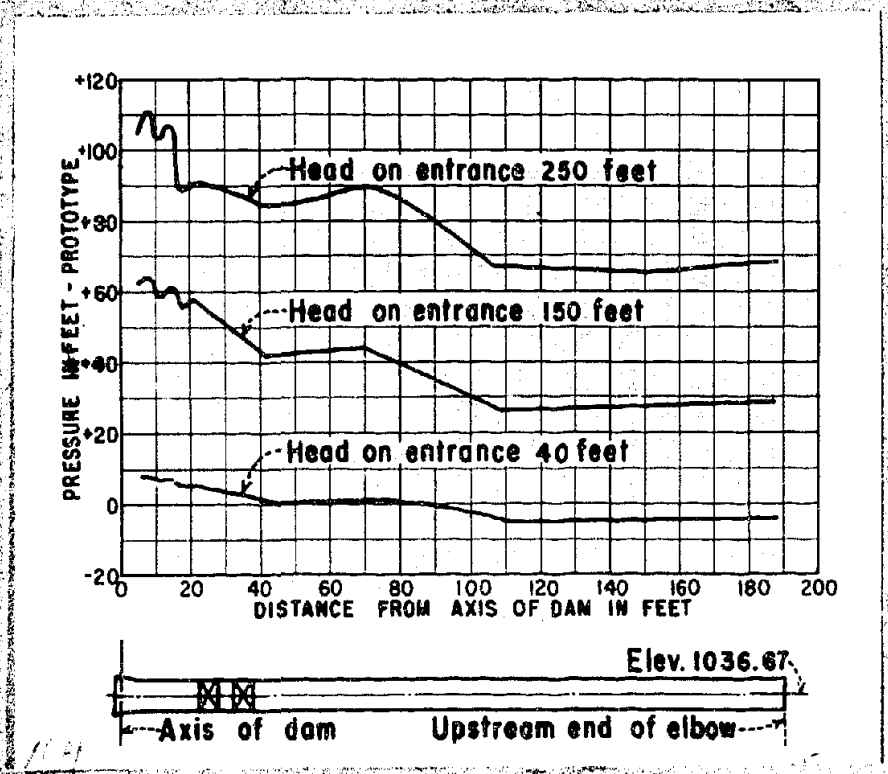

Figure 7 - Pressure on Crown in Final Design of Grand Coulee River Outlets

Exhaustive studies showed that pressures throughout the conduit were positive for all heads in excess of 40 feet on the center line of the entrance. The subatmospheric pressures which will occur when the outlet is operating under a head less than 40 feet should do no damage in the short period of operation necessary during construction.

With the air vents at the gates closed, the minimum head on the center line of the entrance required to cause the conduit to flow full at all points was 21.42 feet. With the air vents open, the conduit flowed only partially full with heads up to 28 feet. With the latter condition, the intake of air was intermittent, resulting in an unstable flow condition. The conduit would flow alternately full and partially full. The final conduit design as described was adopted for the two upper tiers of outlets at Grand Coulee Dam and for all three tiers at Shasta Dam.

Slide 8

The trough, or apron, portion of the outlets presented a problem of greater magnitude than originally anticipated. As the solution of the elbow and exit channel unfolded, the importance of the shape of the open channel became increasingly apparent. In the case of ordinary open-channel flow, minor surface irregularities are of relatively little importance, but this problem required a discharge surface which would reasonably fit a jet of water with a diameter of 7 feet 9 inches, and a maximum velocity of 110 feet per second. Any nonconformation tending to change the direction of this ponderous jet would result in unfavorable flow conditions. As in the case of the

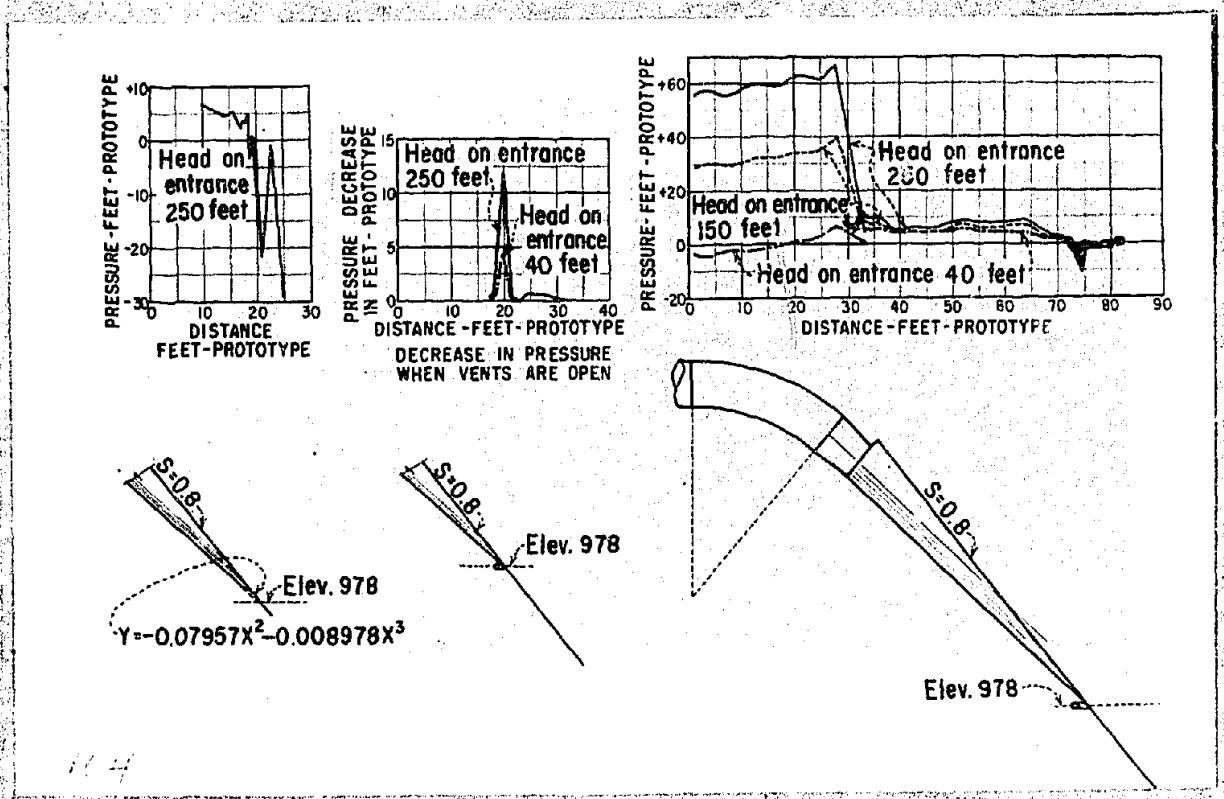

Figure 8 - Open Channel Portion of River Outlets - Grand Coulee Dam

elbow, a step-by-step trial method was used to arrive at the final design.

In the first trial, the invert radius at the upper end was made equal to the downstream radius of the cone and a warp inserted to connect with a flat section at the face of the dam. A slight, but distinct break was formed between the cone and the apron and between the apron and the face of the dam. The pressures immediately downstream from the cone were slightly above atmospheric, which was contrary to the expectation of severe subatmospheric pressures. The

complete surprise was the excessively low pressures on the apron immediately above the intersection with the face of the dam.

An apron with a constant invert radius equal to the downstream radius of the cone was next tried. The pressure curves show that subatmospheric pressures still existed at the lower end. It seemed logical that if the lower end were curved slightly upward that positive pressures would result. This would also allow air to enter beneath the jet to aerate that portion of the face of the dam. The pressure curves of this trial showed that subatmospheric pressures still occurred in this region.

The reason for the negative pressures in the area immediately below the intersection of the apron with the face of the dam is quite apparent. The high-velocity jet naturally would not follow the slight break in slope between the invert of the apron and the face of the spillway. On the other hand, the jet clung so closely to the face of the spillway as not to permit air flow beneath it to relieve subatmospheric pressures at this point.

The cause of the low pressure on the apron adjacent to its intersection with the face of the dam was less apparent. At the upstream end of the apron, the pressures were slightly above atmospheric, increasing in intensity farther downstream, while at the end they were severely subatmospheric. The explanation of this condition is not entirely clear but the slight angle between the invert of the cone and the apron may cause the jet to impinge slightly at the first region of high pressure and ricochet, resulting in the low pressure in the

channel near its intersection with the spillway face.

Visually, there was no evidence of this ricocheting action, but a line of piezometers along the invert indicated the presence of the low pressure. Additional piezometers installed as the testing progressed defined the extent of the low-pressure zone. It then became a tedious proposition of finding a simple means either of preventing the formation of the negative pressures, or of relieving them; a task which in retrospect looks simple. When the solution was found, it was quite by accident. Pressures in the elbow, cone, and upper portion of the channel were satisfactory; the jet of water was stable and undisturbed; the design of the conduit down to the end of the cone had been released to the design department for detailing; the simplicity of the design so far was encouraging. But what was to be done with this one remaining low-pressure condition? It appeared that the optimum design had been reached so far as structural design and visual observations were concerned.

One morning, after several weeks of study, the single-leg glass piezometer tubes were being replaced with U-tubes to eliminate the necessity of establishment of a datum plane after each change in the model. During the changing of the rubber connections, it was noted that the pressure downstream from any disconnected tube was increased. Air flowing into the disconnected tube aerated the low-pressure region. Why not install air vents for that purpose?

Slide 9

The air supply was taken from the face of the dam at a sufficient

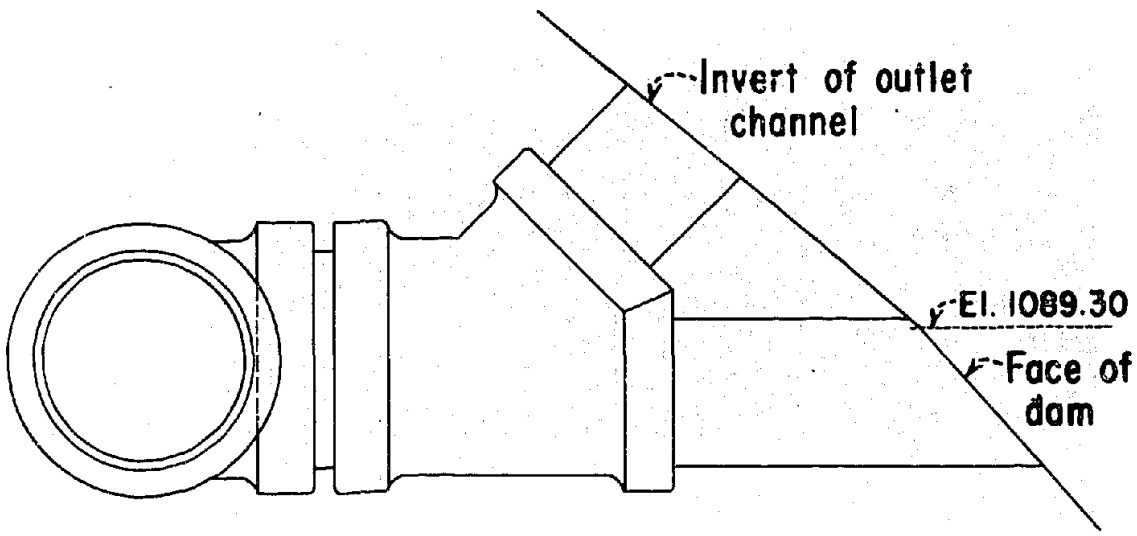

Figure 9 - Air-Supply Piping at Lower End of River Outlets - Grand Coulee Dam

distance on both sides of the channel to prevent the outlet jets covering the openings. The size of the air conduits was determined on the model by trial. In the prototype, the header lines have a diameter of 6 inches while the feeder lines are 4 inches in diameter.

The jet air-supply piping is arranged to be self-draining to prevent accumulation of water in the lines when the outlets are not in operation and is arranged to relieve the subatmospheric pressure region below the intersection of the apron and spillway face as well as the one immediately above. It is apparent that no air reaches the inlets to the system when the spillway is operating; however, under that condition the vertical component of the mass of spillway water will force the jet downward, preventing the formation of subatmospheric pressure.

Slide 17

At the time the studies on the redesign of the outlet were started, the construction blocks in the Grand Coulee Dam were poured to elevation 975, which made it necessary to place the outlet opening on the face of the dam above this elevation. The original thought was that the opening could advantageously have been made longer had it not been for this limitation.

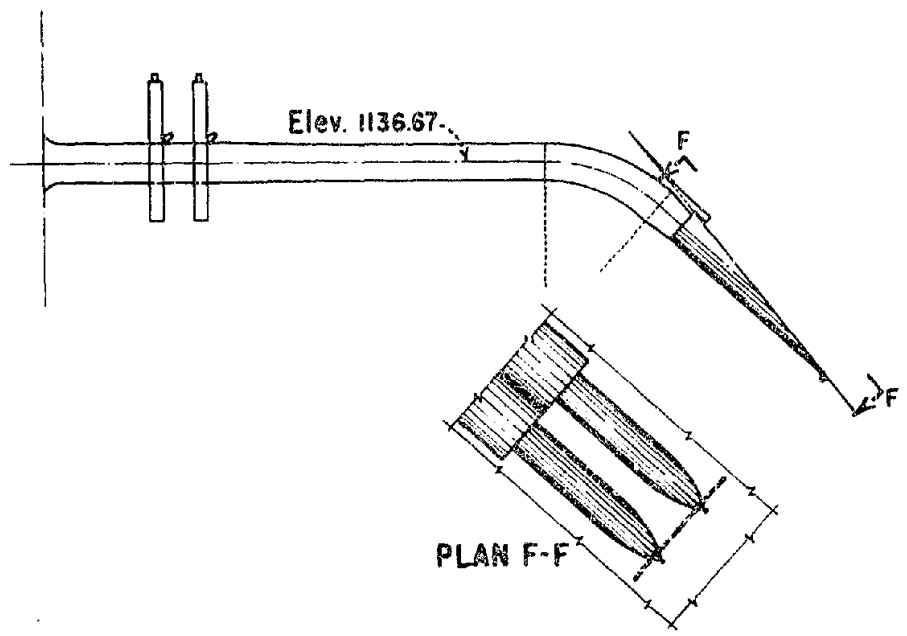

Figure 10 - Final Design of River Outlet Showing Deflectors over Exit

The final design for the intermediate outlets at Grand Coulee Dam, which was developed under extreme urgency due to the progress of construction, did not have deflectors over the outlets, although consideration had been given to the excessive spray from the water dropping into the channel of the outlet.

Later, as the model of Shasta Dam spillway was completed, the outlets were installed using the design without the deflector. Operation of the model clearly demonstrated that some remedy was necessary to minimize the spray when the spillway was operating with a small discharge - probably a frequent occurrence. The disturbance at the outlet exits will prevail during two flow conditions: (1) when the spillway only is operating, and (2) when the outlets are discharging simultaneously with a small quantity of water passing down the spillway.

In the first condition, the water dropped into the invert of the outlet channel and ricochetted into the air, causing severe spray. Since the conduits in the upper tier at Grand Coulee were placed directly above the corresponding ones in the lower tiers for economy in the trashrack structure, a similar action occurred in the intermediate tier when the upper outlets were operating alone.

The second condition is the result of the spillway flow joining the outlet jet. The frictional losses of the thin sheet of water down the face of the spillway are greater than the losses in the outlet. Since the head causing the flow is the same in each case, the velocity of the outlet jet is greater. This difference in velocity causes the disturbance over the outlet exit channels. There is also a difference in the velocities of the two jets when the spillway is operating at a greater capacity, the spillway flow being the faster, but the thick sheet of the spillway is not conducive to spray formation. The spray for this second condition is considerably less than

for the first; and being infrequent in occurrence, no attempt was made to remedy the unfavorable condition, mainly because no logical solution could be evolved.

The first condition was eliminated by placing the spillway jet on a trajectory above the openings in the face of the dam. The raised portion, or deflector, was parabolic in the direction of flow and blended into the spillway face by reverse curves.

In the case of the intermediate tier at Grand Coulee, the deflector was extended over the upper portion of the opening, lessening the length of the trajectory, care being taken to prevent the outlet jet from striking the under side of the deflector. As excessive length of the trajectory caused a disturbance when the deflected jet returned to the face of the dam, three trials were made on the model to determine the shape and location of the structure.

With the addition of the deflector over the outlet, the thickness of concrete between the cone and the face of the deflector was increased considerably beyond the minimum established at the beginning of the studies as necessary for the reinforcing steel. Advantage was taken of these projections to move the elbow and cone three feet horizontally downstream. This change moved the point of intersection between the invert of the channel and the face of the dam up the slope thirteen feet, reducing the exposed opening. Construction progress prevented any change in the intermediate outlets at Grand Coulee except the addition of the deflector, but the shortened opening and deflector were adopted for the upper tier at Grand Coulee and all outlets in Shasta Dam.

The water flowing down the spillway and over the outlets will create an ejector action in the outlets which will exhaust the air in them. This reduction of pressure would deflect the spillway flow into the outlet channels, causing practically as severe spray as the original condition without the deflectors. Air inlets had previously been provided downstream from each control gate to relieve shock during opening and closing of the gates. Further studies were made to determine the adequacy of these vents in relieving the sub-atmospheric pressures within the outlets caused by the ejector action at the exit. A considerable increase of pipe size was recommended to insure adequate duration.

Slide 11

To study the hydraulic characteristics in the prototype structure and compare actual field results with the model [illegible], piezometer openings were placed in the [illegible] of the [illegible] block 51 in the intermediate and upper tiers at Grand Coulee Dam. A piping system converts these openings to terminal boards in the inspection galleries.

Since it is not intended that the outlets be operated with heads of less than 40 feet after the completion of the dam, it was necessary to study the flow conditions under low heads during the construction period. Field conditions have permitted the study of the intermediate tier operating at or below [illegible] feet. Additional observations are being made as opportunity permits.

Figure 11 - Deflectors Over Exits of Intermediate Outlets at Grand Coulee

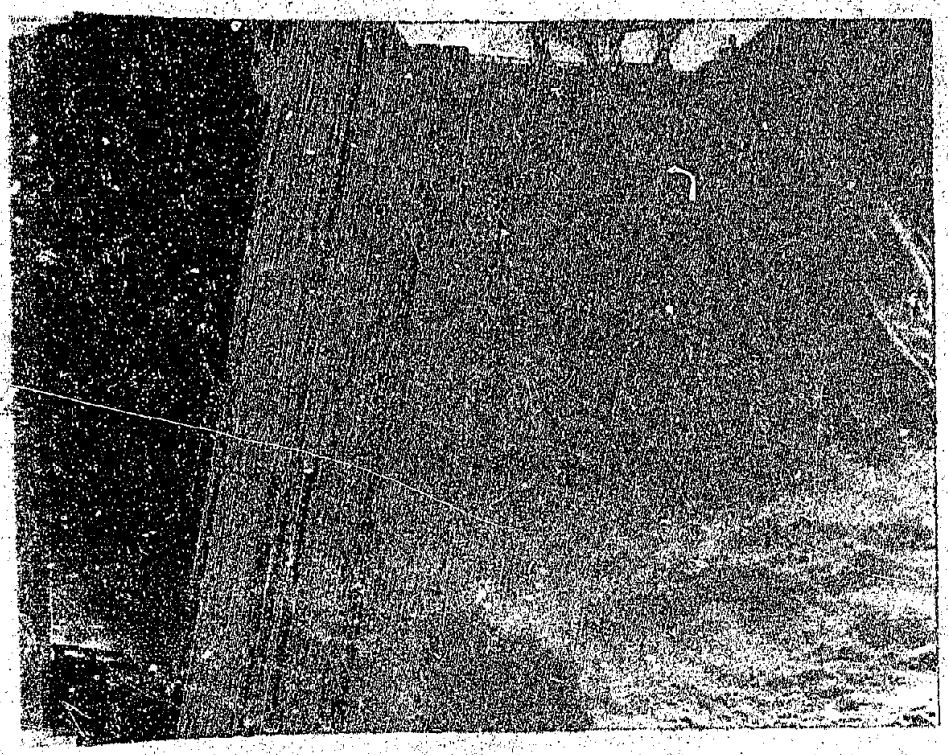

Figure 12 - Flow From River Outlets
at Grand Coulee

Slide 12

Visually, the action of the flow from the intermediate tier corresponded favorably with the model. The intake of air through the vents at the intersection of the apron with the face of the spillway substantiated the model studies. Although the action of the deflectors with respect to the spillway flow cannot be ascertained until the dam is completed, their location with respect to the outlet jet permits ample inflow of air beneath the deflector.

Consideration of the lower tier of outlets was limited to the action of the tailwater surface. The behavior in the field structure, as far as could be ascertained by visual observations, was strikingly similar to that in the 1:120 model.

The pressure observations in the prototype structures have not progressed sufficiently to draw a positive comparison, but no adverse pressure conditions have developed and the indications are that the comparison will be favorable.

The hydraulic laboratory in which these studies were made functions as a section of the Materials, Testing, and Control division of the Denver office of the Bureau of Reclamation under the general supervision of R. F. Blanks, Engineer, and Arthur Ruettgers, M. Am. Soc. C. E., Senior Engineer. Design studies and investigations were made under the supervision of W. H. Walder, M. Am. Soc. C. E., Assistant Chief Designing Engineer, and J. L. Savage, M. Am. Soc. C. E., Chief Designing Engineer. Engineering and construction work was under the general direction of S. O. Harper, M. Am. Soc. C. E., Assistant Chief Engineer, and the late R. F. Walter, M. Am. Soc. C. E., Chief Engineer, and the activities of the Bureau are under the general charge of John C. Page, M. Am. Soc. C. E., Commissioner.

- - -