HYD 582

HYD 582

UNITED STATES
DEPARTMENT OF THE INTERIOR
BUREAU OF RECLAMATION

HIGH HEAD GATE SEAL STUDIES

BUREAU OF RECLAMATION
HYDRAULIC LABORATORY
MASTER
FILE COPY
DO NOT REMOVE FROM THIS FILE

Report No. HYD-582

HYDRAULICS BRANCH
DIVISION OF RESEARCH

OFFICE OF CHIEF ENGINEER
DENVER, COLORADO

MARCH 1968

HYD 582

The information contained in this report may not be used in any publication, advertising, or other promotion in such a manner as to constitute an endorsement by the United States Government or the Bureau of Reclamation, either explicit or implicit, of any material, product, device, or process that may be referred to in the report.

Where approximate or nominal English units are used to express a value or range of values, the converted metric units in parentheses are also approximate or nominal. Where precise English units are used, the converted metric units are expressed as equally significant values. A table of conversion factors--BRITISH TO METRIC UNITS OF MEASUREMENT--is provided at the end of this report.

Report No. HYD-582

HIGH HEAD GATE SEAL STUDIES

by

R. D. Mohrbacher

March 1968

HYDRAULICS BRANCH
DIVISION OF RESEARCH

UNITED STATES DEPARTMENT OF THE INTERIOR * BUREAU OF RECLAMATION
Office of Chief Engineer . Denver, Colorado

ACKNOWLEDGMENTS

This study was initiated by the Mechanical Branch and was conducted in the Hydraulics Branch under the supervision of Mr. W. E. Wagner, Head, Structures and Equipment Section. Mr. H. M. Martin is Chief of the Hydraulics Branch. Photography was by Mr. W. M. Batts, Office Services Branch.

CONTENTS

	Page
Abstract	ii
Purpose	1
Conclusions	1
Applications	2
Introduction	2
Test Facility	4
Description of Seal Specimens	4
Test Procedure	5
Comparisons of Seal Performance	6
Automatic Retraction-extension	9

	Table
Description of Cladding on Seal Specimens	1
Summary of Data Obtained on Gate Seal Specimens	2

	Figure
Seal Designs	1
Typical Gate Installation	2
Views of Test Facility	3
Section through Test Rig	4
Specimens 1 and 2 after Testing	5
Specimens 3 and 4	6
Specimen 5, Bulb Clad with Fluorocarbon	7
Specimen 7 in Test Rig	8
Specimen 8 in Test Rig	9
Specimen 13 in Test Rig	10
Specimen 7 after Testing to 450 Feet (137.16 m)	11
Specimen 13 after Testing to 600 Feet (182.88 m)	12
Seal Bulb Extension Curves for Specimen 13, Tested with the Automatic Retraction-Extension Scheme	13

ABSTRACT

Studies were made to develop rubber seals suitable for use on wheel- and roller-mounted gates operating under high heads. During the closing cycle under unbalanced pressure conditions, the seal bulb tends to be pinched between the seal clamp and seal seat. Six factors affecting this pinching were varied in an attempt to find the optimum seal assembly. Eleven double-stem seal designs, utilizing different combinations of fluorocarbon and brass cladding and rubber compositions, were tested at heads up to 600 ft (182.88 m). The tests were conducted in a special test rig which accommodated full-size seal specimens, 12-1/8 in. (30.798 cm) long. The tests included measuring the seal bulb extension, and photographing and observing the general behavior of the seal under load during opening and closing cycles of the gate.

DESCRIPTORS-- *gate seals/ *gates/ roller gates/ high pressure gates/ test facilities/ test specimens/ test procedures/ *hydraulic gates and valves/ mechanical engineering/ rubber/ fixed wheel gates/ leakage/ water pressures/ friction/ compression/ flexibility/ vibrations/ deformation/ loads

IDENTIFIERS-- emergency closures

PURPOSE

These studies were conducted to obtain comparative operational data on several different seal designs and to develop a satisfactory seal and seal assembly for use on gates operating under high heads.

CONCLUSIONS

1. The clamp-on-type seals tested were superior to the bolt-through design in two respects: (a) the bulb extension and resulting pinching tendency during the closing cycle of the gate was reduced, and (b) the clamp-on-type seal showed less tendency to vibrate when the bulb was in the proximity of the seal seat.

2. A brass or fluorocarbon cap bonded to the bulb significantly reduced the tendency for the bulb to be pinched between the clamp and the seat.

3. The fluorocarbon cap was superior to the brass cap because of its lower coefficient of friction and greater flexibility and resiliency.

4. Extending the fluorocarbon cap to cover the lower (high pressure side) stem of the seal reduced the tendency to disbond between the cap and rubber, reduced the bulb extension, and reduced the tendency for vibration during the gate operating cycle.

5. When the fluorocarbon was extended to cover the entire upper stem surface, the bulb deformation between the upper clamp and the seat was less with the gate closed.

6. The use of 0.015-inch (.381-mm)-thick brass bonded to the back side of the seal significantly reduced the extension and pinching of the bulb at high heads. At moderate heads, the brass also practically eliminated the permanent set experienced on seals with a fluorocarbon cap extending over the bulb and stems.

7. The use of rubber with a high modulus of elasticity improved the seal performance by reducing excessive extension and increasing the rigidity of the bulb.

8. Decreasing the clamp-to-seat clearance increased the pinching tendency. Increasing the clearance decreased the tendency for pinching. Increasing the clearance, however, also increased the tendency for vibrations to develop on seals having no cladding on their stems.

9. Seal failure by pinching occurred more readily as the rate of gate closure was increased.

10. Automatic retraction of the bulb as the seal approached the seat and extension of the bulb upon seating could not be satisfactorily achieved in the test rig.

11. Of the specimens tested, No. 13, having a brass backing, and a fluorocarbon cap covering the bulb and both stems, was the seal best suited for high-head applications.

APPLICATIONS

These studies produced data and general observations that will aid the designer in choosing a seal suitable for his application. This choice will depend in large part upon the head acting on the gate. A table in the report gives bulb extension data and heads at which seal failure occurred for the various designs tested. From this information an adequate and economical seal design can be chosen.

As a result of observations made during these studies, a number of possible improvements in the seal design have been proposed and further tests on new designs are being considered.

INTRODUCTION

All seals tested were of the double-stem designs shown in Figure 1. These seals are used on wheel-mounted and roller-mounted gates installed primarily as guard gates in penstocks, outlet works, and spillways in a manner similar to that shown in Figure 2.

On relatively small gates metal-to-metal sealing is often utilized. As the gate size increases, however, maintaining alinement of metal seating surfaces becomes more difficult and the use of rubber seals is more practical. Consequently, rubber seals which are clamped to the gate in a manner that allows flexing of the seal to compensate for inaccuracies in gate fabrication and seat alinement are used on large gates.

On earlier gate installations, rubber seals with a cross-sectional shape similar to that of a music note were commonly used. As gates for higher heads became necessary in later installations, the music-note seals no longer gave satisfactory service and a double-stem, bolt-through-type seal similar to Figure 1A was developed. The double-stem, clamp-on seal shown in Figure 1B evolved next. As shown in this report, the double-stem, clamp-on seal has definite advantages over the bolt-through-type seal for high-head applications.

Gates with rubber seals are generally operated under balanced water pressure conditions, but they must also be suitable for emergency closure at unbalanced pressure, with full reservoir head on the upstream side of the gate leaf and approximately atmospheric pressure on the downstream side. It is during emergency closure that the seals are subjected to the greatest stresses.

In the seal assembly, a pressure groove behind the seal is provided so that hydrostatic pressure will force the bulb against the seat when the gate is closed. On some installations, the admission of pressure to this groove is prevented by a mechanically actuated valving system until after the gate is fully closed. This complicating feature is omitted on most recent Bureau of Reclamation gates. This omission results in the groove being subjected to reservoir pressure at all times. Thus, during the emergency closing cycle, the unbalanced pressure acting on the top or bottom seals produces extension before contact is made with the seat. As the bulb moves onto the seat, the extension results in a tendency for the bulb to be pinched between the clamp and the seat. Because the side seals are in continuous contact with the seats, no pinching problem exists.

Seal failure due to pinching is dependent on the following factors:

1. Amount of seal bulb extension
2. Deformability of the bulb
3. Coefficient of friction between the bulb and the seal seat
4. Strength of bond between the cladding and the rubber
5. Clamp-to-seat clearance
6. Rate of gate closure
7. Slope of the surface which forces the extended seal inward to the seal seat

In this test program, the first six of these factors were varied in an attempt to find a suitable seal assembly. The retraction slope on the seal seat could not be changed readily, so factor (7) was not varied. The slope of the test rig seat was purposely made greater than that normally used in prototypes to provide a more critical condition than would be the case in an actual gate installation.

The seals were supplied, at no cost to the Government, by a commercial firm. The seals had the same shape as those used in

recent Bureau of Reclamation installations, but utilized different combinations of fluorocarbon and brass coverings, brass backings, and rubber compositions.

The first fluorocarbon material used as cladding on seals was transparent. It was discovered, however, that exposure to sunlight or ultra violet light destroyed the bond between the fluorocarbon and the rubber. An opaque, red fluorocarbon was tried next and seals clad with this material were unaffected by sunlight or ultra violet light. Presently, an opaque, green fluorocarbon having better physical properties than the red fluorocarbon is used as cladding material.

TEST FACILITY

The seal tests were conducted in a special Bureau-designed test rig, shown in Figures 3 and 4. The rig has a fixed seal assembly and a movable seal seat operated by a hydraulic cylinder mounted on top of the rig. Although the seat is fixed and the seal moves in the prototype, this arrangement provided the same relative seal-seat motion, and had the advantage of keeping the seal in view through plastic windows throughout the gate test cycle. The hydraulic cylinder was actuated by a variable displacement pump on the operating unit located adjacent to the test rig. Plastic windows on each side and on the back of the rig allowed visual observations and photographing of the seal behavior. Water was pumped at a maximum head of 612 feet (186.54 m) through the 8-inch (20.32-cm) pipe into the bottom of the test rig. Flow past the seal was upward and was deflected and discharged out the bottom rear of the rig. Pressure was applied to the groove at the back side of the seal by a 1-inch (2.54-cm) pipe connection from the 8-inch (20.32-cm) supply line. Shims behind the seal provided a means of varying the clamp-to-seat clearance. The seal assembly was removable from the upstream side of the rig to facilitate changing of specimens.

Description of Seal Specimens

The specimens were prototype-size sections, 12-1/8 inches (30.798 cm) long. Sixteen specimens of twelve different samples of rubber seals were tested in the apparatus described above. A description of the cladding on each specimen is given in Table 1.

Physical properties of rubber for all specimens except No. 11:

Shore A Durometer hardness	=	60 to 70
Tensile strength	=	3,700 to 4,000 psi (260.13 to 281.23 kg/cm^2)
Elongation at break	=	575 to 700 percent
Modulus of elasticity at 25 percent elongation	=	140 psi (9.84 kg/cm^2)

Physical properties of rubber for Specimen 11:

Shore A Durometer hardness	=	67
Tensile strength	=	3,600 psi (253.11 kg/cm^2)
Elongation at break	=	518 percent
Modulus of elasticity at 25 percent elongation	=	169 psi (11.88 kg/cm^2)

Fluorocarbon specifications: 0.030 inch (.762 mm) thick; tensile strength = 2,000 psi (140.61 kg/cm^2) (minimum); elongation = 250 percent (minimum).

Hard or half-hard brass was used on the seals. The brass was 1/16 inch (1.588 mm) thick when used on bulbs and .015 inch (.381 mm) thick when used as backing.

TEST PROCEDURE

Data taken and observations made in this study included:

1. Measurement of the distance the seal bulb extended in a horizontal direction from its initial position when subjected to a given head of water.

   These measurements were taken at 25- or 50-foot (7.62- or 15.24-m) increments of head up to failure or until extreme pinching of the bulb prevented the gate from closing. They were made with the aid of a grid of lines spaced at 0.10-inch (2.54-mm) intervals on each side of a 2-inch- (5.08-cm-) thick piece of transparent plastic. By alining the grids with a similar one on the test rig window, an accurate measurement of the bulb extension could be made. All but one of the specimens had either a 0.03-inch (.762-mm) or a 1/16-inch (1.588-mm)-thick cap on the bulb which aided in estimating the amount the seal extended to the nearest hundredth of an inch (.254 mm).

2. General observations of seal performance during gate operation.

3. Motion pictures of seal performance during gate operation.

4. Still photographs at selected heads with the gate in the open and closed positions.

5. Visual examination and photographs of seals after removal from test rig.

6. Measurements of pressure fluctuations behind the seal using an oscillographic recorder.

The tests were run with a "normal" 7/32-inch (5.556-mm) clamp-to-seat clearance. (Specimens 3 and 13 were also run at additional clearances.) With this clearance there is a 1/16-inch (1.588-mm) interference between the bulb and seal seat with no water load on the seal. The gate closing speed was approximately 6.25 feet (1.905 m) per minute, except when the seal was approaching failure the speed was reduced to allow the bulb more time to retract. Also, some test runs were repeated with different closing speeds.

Comparisons of Seal Performance

Table 2 gives a summary of the data obtained on the specimens.

Specimens 1 through 4 were of the clamp-on design having a red fluorocarbon cap bonded to the bulb. The brass backings on Specimens 2 and 3, which had been applied in the laboratory, broke loose from the rubber during testing (Figure 5A); subsequently, all cladding was factory applied and little additional trouble with bonding was experienced. On Specimens 1 and 3, the cap tore loose from the bulb on the lower (high-pressure) side (Figure 5B). As a result, several samples were made with the fluorocarbon extended to cover the lower stem. This design proved to be successful and no major bond breaks occurred on specimens so made. When Specimen 3 was tested with 3/8-inch (9.525-mm) clamp-to-seat clearance (increased from 7/32-inch (5.556 mm)), severe vibrations occurred when the bulb was near the seat. This fact would indicate that increasing the clearance increases the tendency for vibrations to develop. Specimen 4 was tested to 500 feet (152.40 m) of head and sustained an extensive bond break on the upper side of the bulb by pinching during the gate closing cycle (Figure 6B). This was the only specimen tested that had a bond break in this region.

Specimens 5 (Figure 7) and 6 were of the bolt-through type and proved to be less satisfactory than the clamp-on type in two respects: (1) the bulbs extended more and pinched during the closing cycle at heads considerably lower than the clamp-on-type (250 and 225 feet [76.20 and 68.58 m], respectively), and (2) very heavy vibrations occurred with the bulb near the seat at heads as low as 150 feet (45.72 m). The greater extension resulted from the seals being restrained positively only at the mounting bolts, whereas the clamp-on seals are restrained continuously along their entire length. In addition, a greater area of unclamped stem existed with the bolt-through seals allowing the stems to stretch more than those of the clamp-on seals. These conditions probably contributed to the vibration problem. To obtain an indication of the severity of the vibrations, measurements of pressure variations in the groove behind the seal were made with an oscillographic recorder. The pressure fluctuated from about plus 90 percent to about minus 70 percent of the head acting on the gate and had frequencies of 7 to 12 cycles per second. It was noted that the pressure in the 8-inch (20.32-cm) supply line fluctuated at approximately the same frequencies and probably initiated the seal vibrations. A similar situation could exist in the prototype, so the tendency for vibrating must be eliminated.

Specimens 7 through 10 and 13 and 14 had the fluorocarbon extended over at least the lower (high-pressure side) stem and, although there was indication of slight separation in the form of "bubbles" in the fluorocarbon bond at the base of the bulb on Specimens 10 and 13, and a slight separation of the brass backing at one end of Specimen 9, no major breaks in the bonds occurred with these specimens.

Specimens 7 and 8 (Figures 8, 9, and 11) were tested up to 425 and 400 feet (129.54 and 121.92 m) of head, respectively, before the bulbs were pinched enough to put a permanent crease in the fluorocarbon cap. It was noted with each successive run to a higher head that a permanent set was imparted to the seals. (The bulb remained displaced about 0.05 inch [1.27 mm] from its initial position after the pressure had been up to 400 feet [121.92 m] and then reduced). The set was apparently due to stretching the fluorocarbon beyond the elastic limit. The extent of this set is shown in Figure 11B.

Specimens 9 and 10 were identical to Specimens 8 and 7, respectively, except for the addition of a brass backing. The brass effectively reduced bulb extension at high heads so that these specimens reached 500 and 550 feet (152.40 and 167.64 m), respectively, before the bulbs were pinched enough to crease the fluorocarbon.

Specimen 13 (Figures 10 and 12), with cladding identical to Specimen 10, underwent about 20 gate opening and closing cycles at 600 feet (182.88 m) and was also subjected to tests at partially open gate positions at heads ranging from 60 to 600 feet (18.29 to 182.88 m) for a period of approximately 20 hours without being damaged. The permanent set noted in Specimens 7 and 8 was practically eliminated in Specimens 9, 10, and 13 by the addition of the brass backing (compare Figures 11B and 12B). Protrusion of the bulb between the upper clamp and seat that occurs under high head with the gate closed was somewhat less on specimens having fluorocarbon extended over the upper stem.

Specimen 11 utilized a special high-modulus rubber and a fluorocarbon cap over the bulb. It had approximately the same bulb extensions as Specimen 8, but failed at a lower head because of bond failure at the base of the bulb. It should be noted that Specimen 11 reached higher heads before pinching than did Specimen 8 and, had the fluorocarbon been extended to cover the lower stem, it would probably have outperformed Specimen 8.

Specimen 12 had no stiffening on its stems and extended much more than any of the other clamp-on seals with the exception of Specimen 15, which also had no stem stiffening. On the initial run, the brass cap, which had been fabricated to a larger radius than specified, restrained the normal movement of the seal by a wedging action between the clamps. At 400 feet (121.92 m) of head the brass deformed, the bulb suddenly moved out into the stream of water, and was folded up against the outer surface of the upper clamp. During opening cycles in this run, vibrations varied from slight at 325 feet (99.06 m) to heavy at 400 feet (121.92 m). This specimen, and Specimens 3 and 19 were the only clamp-on seals that displayed a tendency to vibrate. All three of these had cladding over the bulb only. It appears probable that extending the cladding on the cap to cover the lower stem eliminated the tendency for vibrations to develop, because of the restraining action of the fluorocarbon covering.

Specimen 14 was tested using a set of radial gate clamps (Figure 4). This type of clamp gives the seal the greater freedom of movement required for sealing on the curved skin plate of a radial gate. As radial gates have not been used by the Bureau at heads much above 125 feet (38.10 m) the tests were terminated at 300 feet (91.44 m) at which point the seal was still undamaged.

Specimen 15 had no cladding on its bulb, but contained a 5 percent wax content for lower friction. This seal had essentially the same bulb extensions as other seals with no stem restraint, but exhibited a much greater tendency to pinch than did any of the other specimens.

Specimen 13 showed the most promise for high-head usage and was tested additionally at 1/8-inch (3.175-mm) and 3/8-inch (9.525-mm) clearances to see what effect varying the clamp-to-seat clearance had on seal performance. As was anticipated, bulb extension was virtually the same at a given head for all three clearances tested. The bulb showed a greater tendency to pinch with 1/8-inch (3.175-mm) clearance and a somewhat lesser tendency with 3/8-inch (9.525-mm) clearance as compared to the 7/32-inch (5.556-mm) clearance tests.

Specimen 19 contained a vulcanized splice with a built-in, exaggerated lineal offset at the joint. Although a quantitative measurement of leakage was not obtained, the sealing effectiveness at the joint was observed by operating the gate through a number of opening and closing cycles at the minimum head of the pump, 60 feet (18.288 m). In examining the sealing surface of the bulb upon removal of the specimen, it was apparent that good contact had been attained in the region of the splice and that adequate sealing was achieved.

Automatic Retraction-extension

Alterations were made to the seal assembly to provide an automatic seal retraction and extension scheme using the principle which had been tested in Hyd-311.1/ The retest was made because the seal assembly differed considerably from that in Hyd-311. The principle of the scheme is as follows (refer to Figure 13): as the seal approaches the seat, the flow of water is controlled by the opening between the lower clamp and the seat and produces high velocity flow which results in a lowered pressure region in the vicinity of the 3/4-inch (1.905 cm) port in the lower clamp. This reduces the pressure in the groove behind the seal and causes the bulb to retract. As the seal continues to move, the point of flow control shifts to the seal bulb or upper clamp, and pressure in the region of the 3/4-inch (1.905 cm) port increases to reservoir head, forcing the bulb tightly against the seat, preferably after the bulb has passed the sloping surface of the seat.

Testing consisted of taking, at various heads, measurements of bulb extension and pressure behind the seal with the seat and seal bulb in three positions relative to each other (Figure 13).

1/Report Hyd-311 "Hydraulic Laboratory Tests of Seals for High Head Coaster and Fixed Wheel Structural Steel Gates--July 31, 1951., by W. C. Case.

The first test was run using Specimen 13. Negative pressures behind the seal were obtained in Position 1 at heads up to 300 feet (91.44 m), but the bulb extended slightly rather than retracting. Apparently, the high velocity stream of water, as an undesirable side effect, reduced the pressure in front of the seal even more than the pressure behind it and caused the seal to extend.

When Position 2 was reached, pressures behind the seal were still much lower than reservoir head and extensions were one-half to two-thirds as great as those without automatic retraction; however, before the bulb moved past the sloping surface of the seat, it snapped out to almost maximum extension. Hence, the pinching situation still existed.

Specimen 14, a more flexible seal, was tested next with essentially the same results. The clearance was changed from 7/32 inch (5.556 mm) to 3/8 inch (9.525 mm), again giving similar results, except that the seating point of contact was shifted slightly downward on the seat.

A satisfactory arrangement for automatic retraction and extension of the seal could not be attained without modifying the test rig to a great degree, so the testing was discontinued at this point.

Table 1

DESCRIPTION OF CLADDING ON SEAL SPECIMENS

Specimen no.	Type of seal	Type of cladding on bulb	Cladding on lower stem	Cladding on upper stem	Brass backing	Remarks
1, 4	Clamp-on	Red fluoro-carbon	---	---	---	
2, 3	Clamp-on	Red fluoro-carbon	---	---	Yes	
5	Bolt-through	Green fluoro-carbon	---	---	---	
6	Bolt-through	Brass	---	---	---	
7	Clamp-on	Green fluoro-carbon	Yes	Yes	---	
8, 14	Clamp-on	Green fluoro-carbon	Yes	---	---	
9	Clamp-on	Green fluoro-carbon	Yes	---	Yes	
10, 13	Clamp-on	Green fluoro-carbon	Yes	Yes	Yes	
11	Clamp-on	Green fluoro-carbon	---	---	---	Rubber with high modulus of elasticity
12	Clamp-on	Brass	---	---	---	
15	Clamp-on	None	---	---	---	Rubber with 5% wax content.
19	Clamp-on	Green fluoro-carbon	---	---	---	

Table 2

SUMMARY OF DATA OBTAINED ON GATE SEAL SPECIMENS

Specimen No. and description*	Bulb Extension (Inches) Head (Feet of Water)												Remarks
	60	100	150	200	250	300	350	400	450	500	550	600	
1. Fluorocarbon on bulb	.14	.17	.22	.27	.30	.39	.57	.69	.80				Bond failure @ 350'
3. FC** on bulb and brass backing	.14	.17	.21	.27	.31	.38	.44	.51	(425 ft) .57				Brass bond failure @ 425'
5. FC on bulb (bolt-through type)	.35	.44	.57	.80	.90	(275 ft) .95							Vibrations @ 150' Bond failure @ 250'
6. Brass on bulb (bolt-through type)	.35	.39	.49	.70	(225 ft) 1.10								Severe vibrations @ 175' Brass distored @ 200'
7. FC on bulb & stems	.14	.16	.21	.24	.28	.33	.40	.52	.62				Crease in FC @ 425'
8. FC on bulb & lower stem	.16	.23	.28	.33	.38	.43	.48	.54	(425 ft) .58				Crease in FC @ 400'
9. FC on bulb & lower stem & brass backing	.16	.19	.23	.28	.33	.36	.40	.43	.46	.49	.52		Slight distortion of FC @ 500'
13. FC on bulb & both stems & brass backing	.16	.19	.22	.25	.28	.32	.35	.38	.41	.44	.49	.51	Pinching @ 600' was not severe enough to damage specimen.
11. FC on bulb & high-modulus rubber	.16	.20	.25	.29	.34	.41	.46	.57	.67				Bond failure @ 350'
12. Brass on bulb	.25	.31	.37	.44	.59								
15. Rubber with 5% wax	.16	.24	.35	.46	(225 ft) .49								

*Unless noted otherwise, all specimens are the clamp-on type.
**Fluorocarbon.

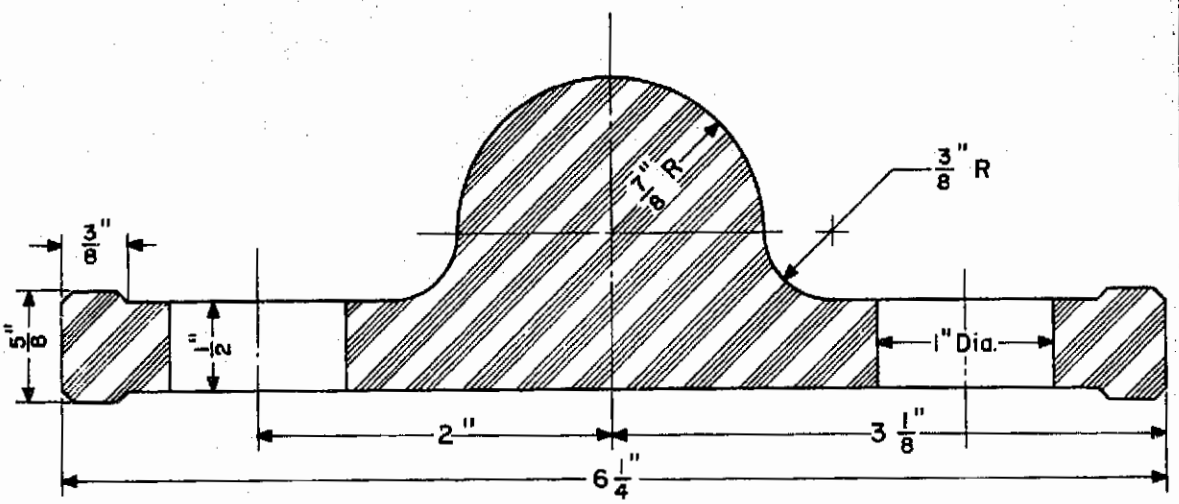

A. BOLT - THROUGH SEAL

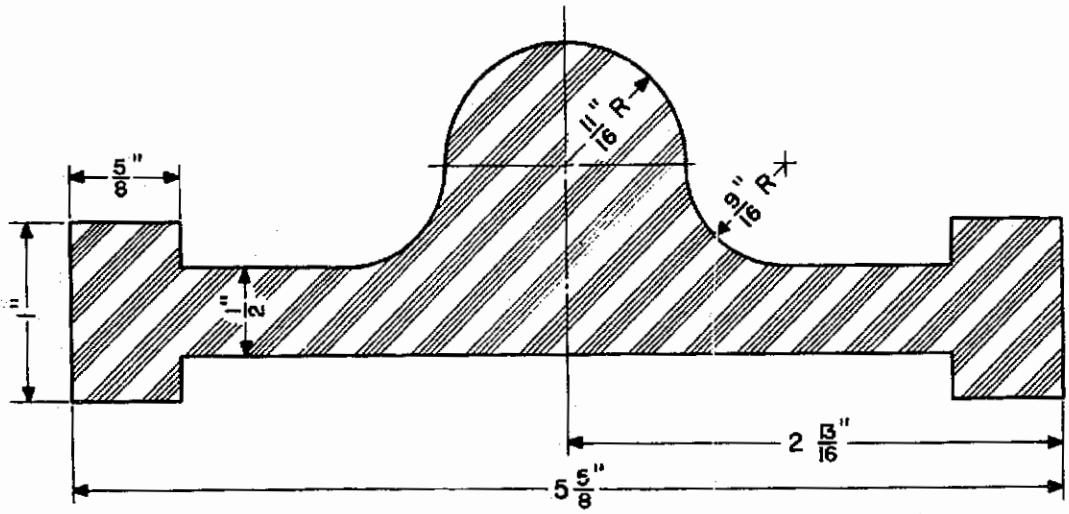

B. CLAMP - ON SEAL

HIGH HEAD GATE SEAL STUDIES

SEAL DESIGNS (FLUOROCARBON AND BRASS CLADDING NOT SHOWN. SEE TEXT FOR CLADDING ON SPECIFIC SPECIMENS)

FIGURE 2
REPORT HYD-582

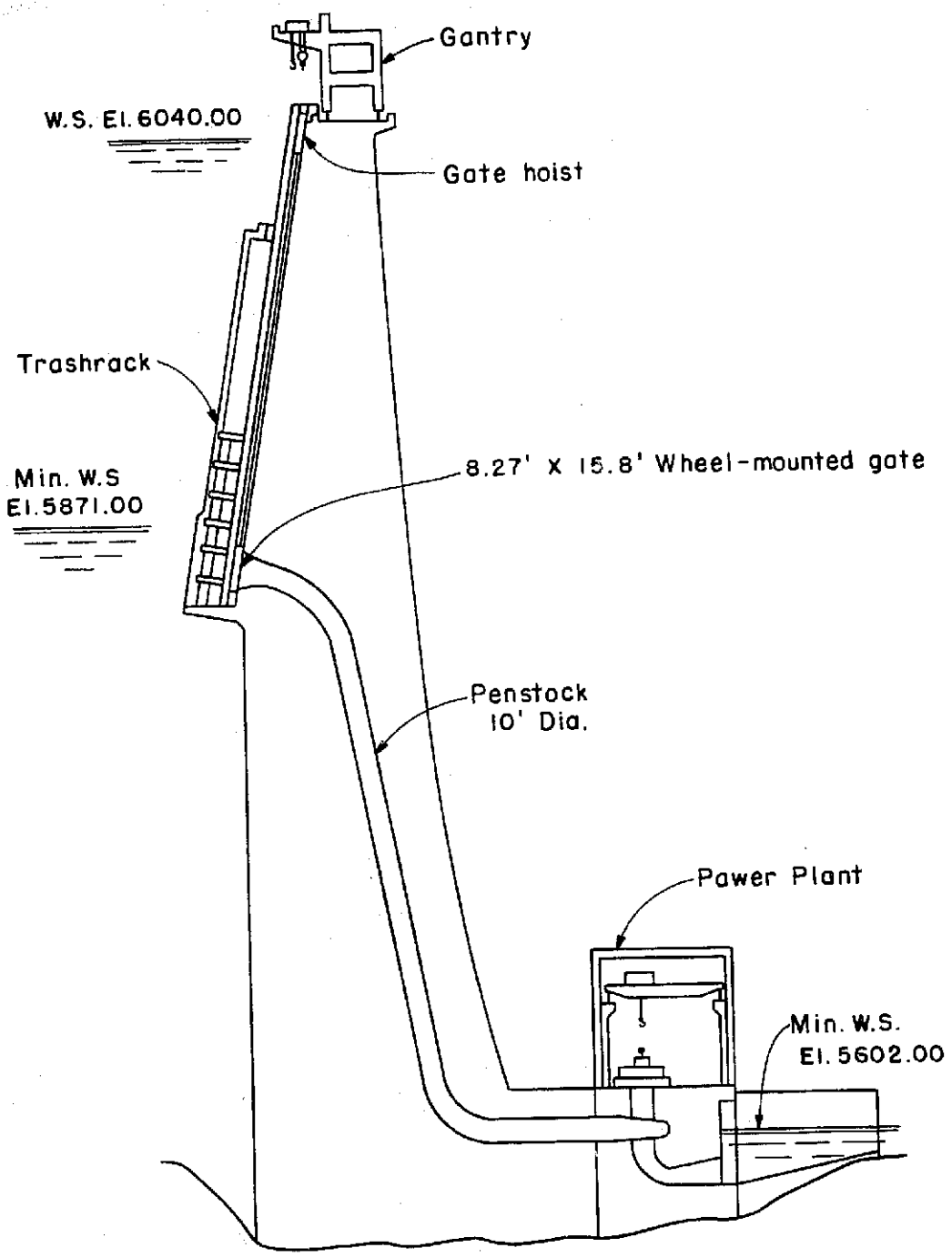

SECTION THROUGH DAM AND POWER PLANT

HIGH HEAD GATE SEAL STUDIES
TYPICAL GATE INSTALLATION

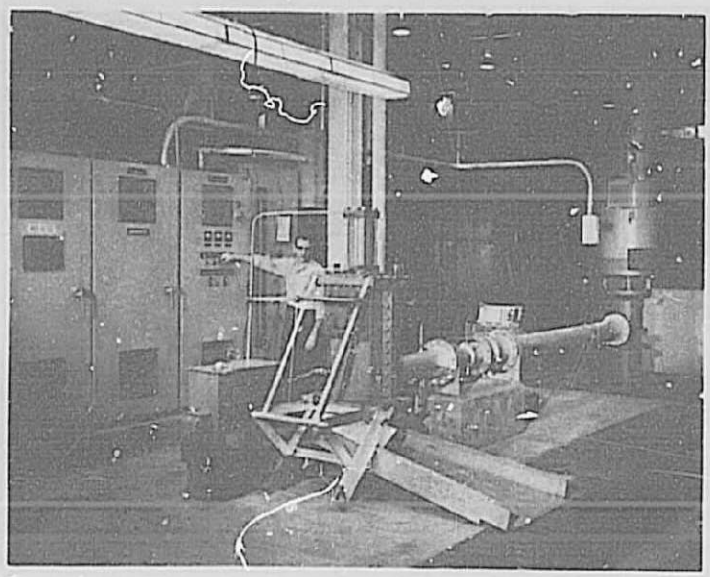

A. Overall view of test facility - showing water pump, controls, and gate seal test rig. Photo PX-D-60628

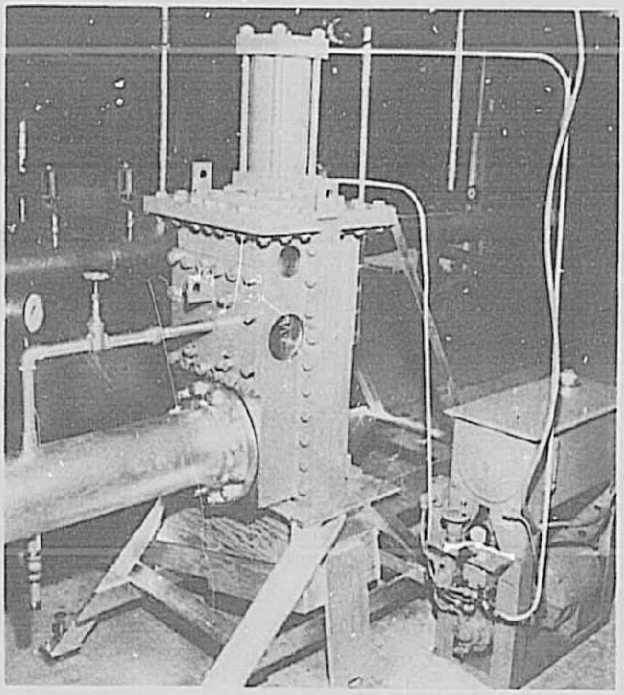

B. Gate Seal test rig. Photo PX-D-57233NA

HIGH HEAD GATE SEAL STUDIES

Views of Test Facility

FIGURE 4
REPORT HYD-582

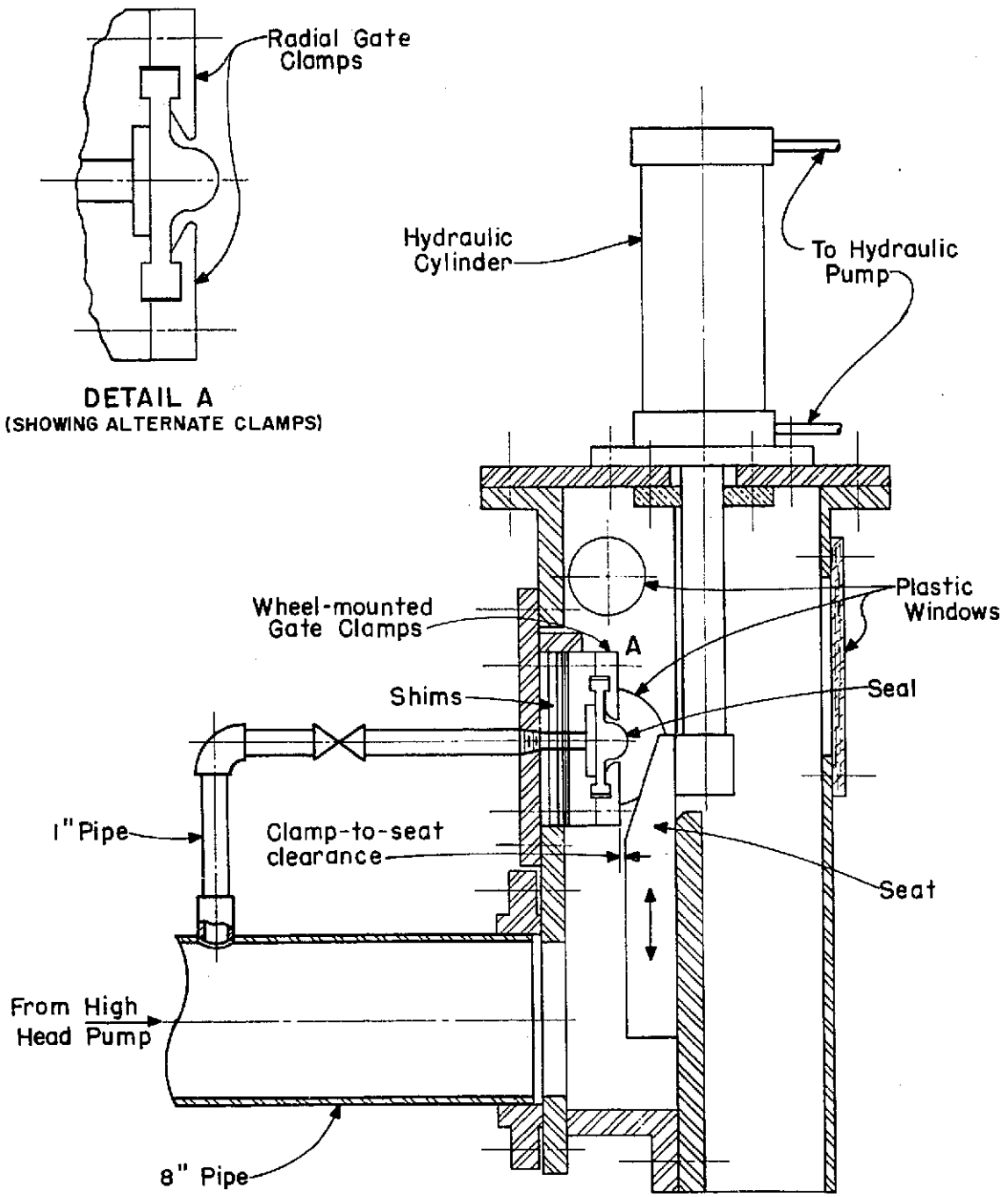

HIGH HEAD GATE SEAL STUDIES
SECTION THROUGH TEST RIG

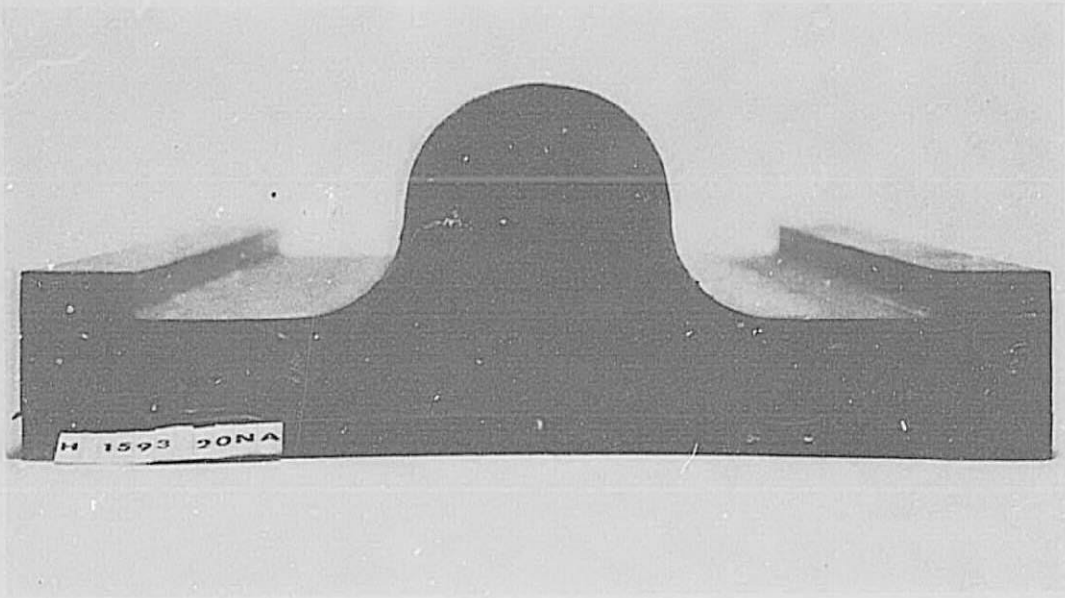

A. Specimen 2 - Brass backing pulled loose from rubber. Photo PX-D-60629

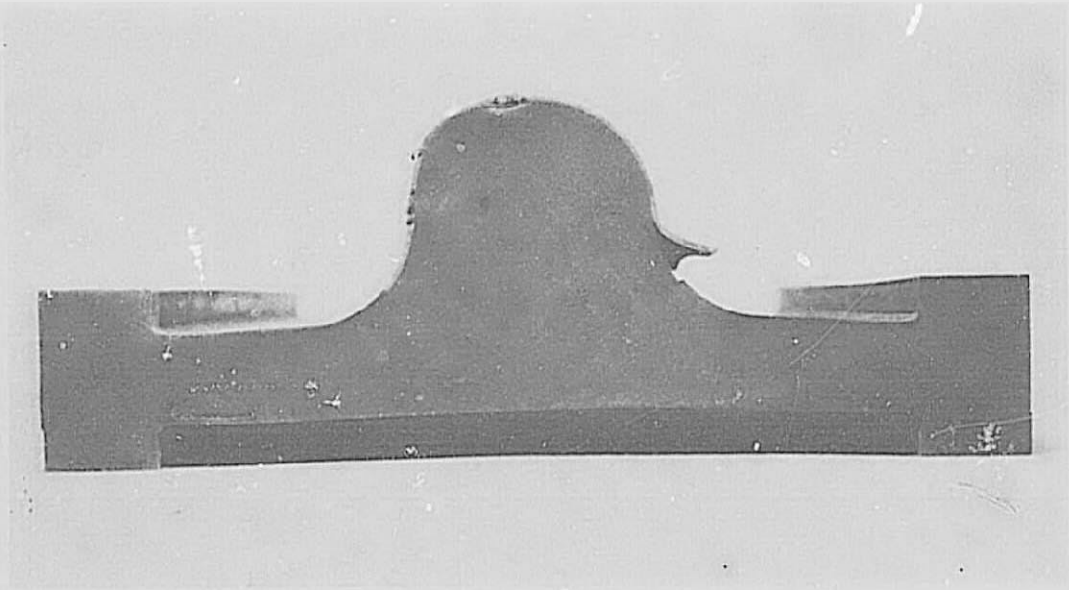

B. Specimen 1 - Fluorocarbon bond failure on high pressure side of bulb. Photo PX-D-60630

HIGH HEAD GATE SEAL STUDIES

Specimens 1 and 2 After Testing

Figure 6
Report Hyd-582

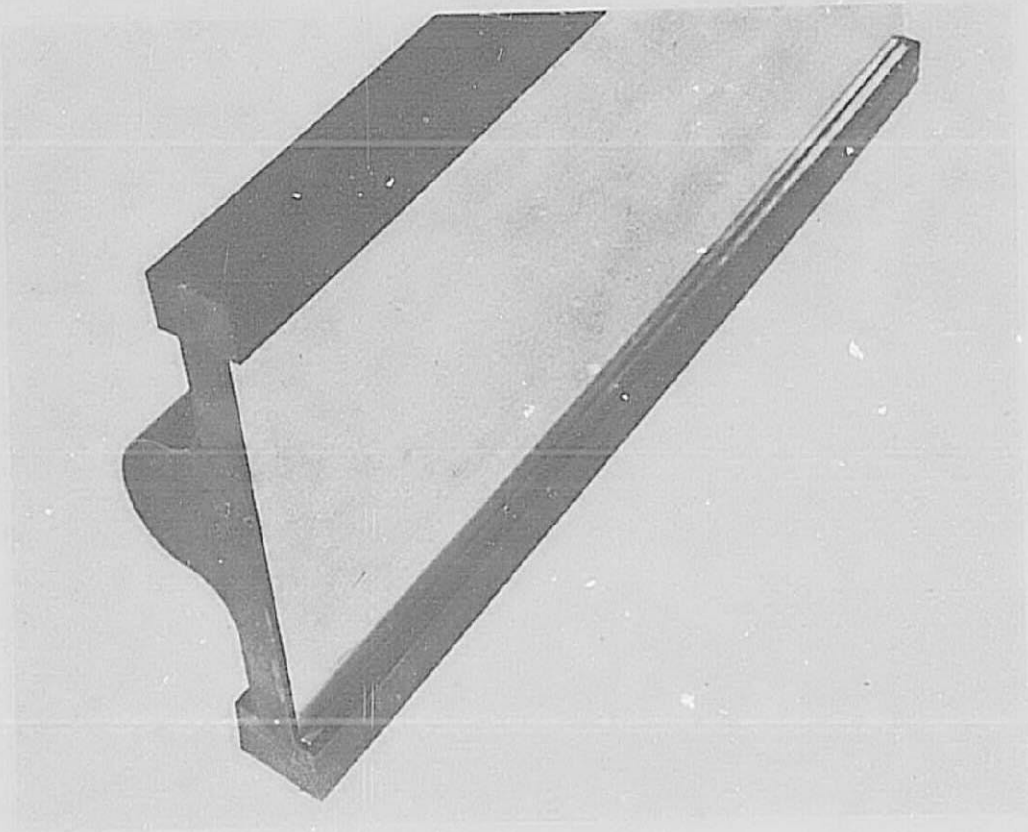

A. Specimen 3 before testing - showing a typical brass backing. Photo PX-D-60631

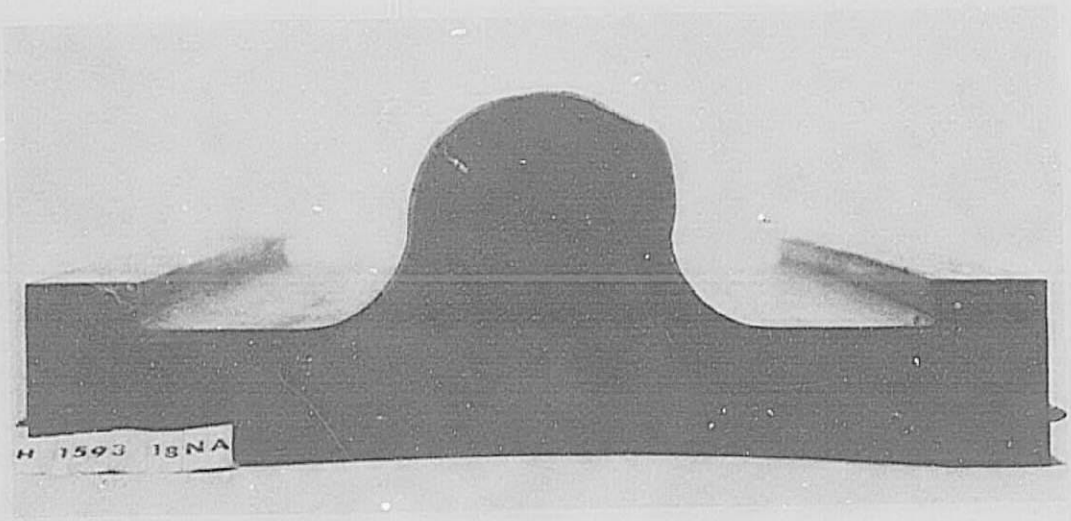

B. Specimen 4 after testing - bond failure on low pressure side of bulb due to pinching between clamp and seat. Photo PX-D-60632

HIGH HEAD GATE SEAL STUDIES

Specimens 3 and 4

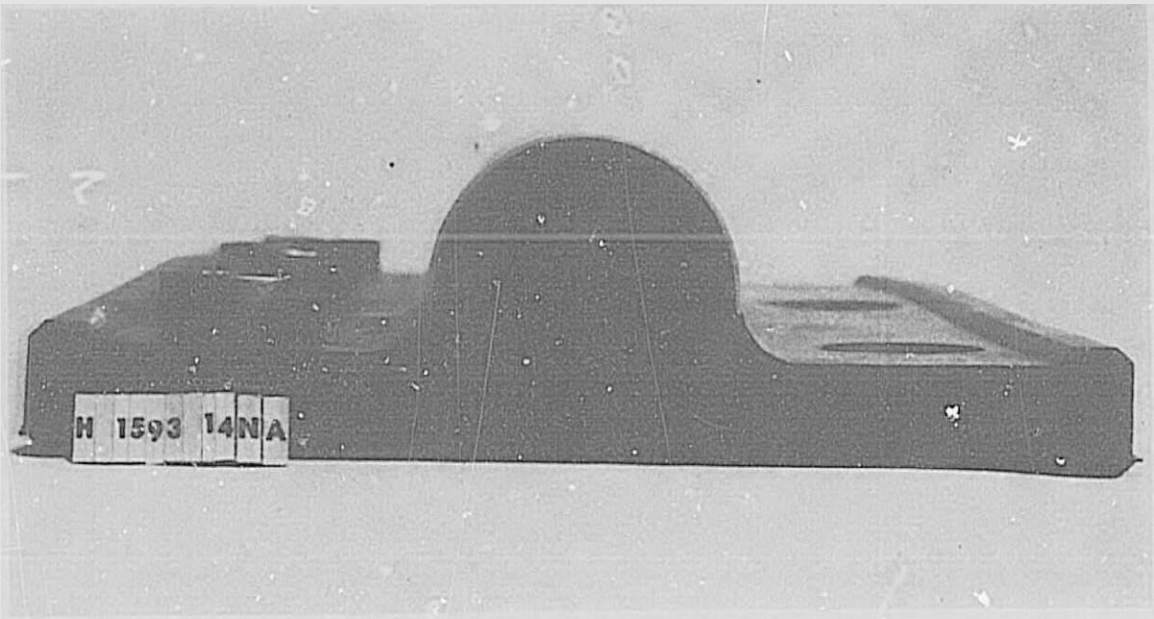

A. Before testing. Photo PX-D-60633

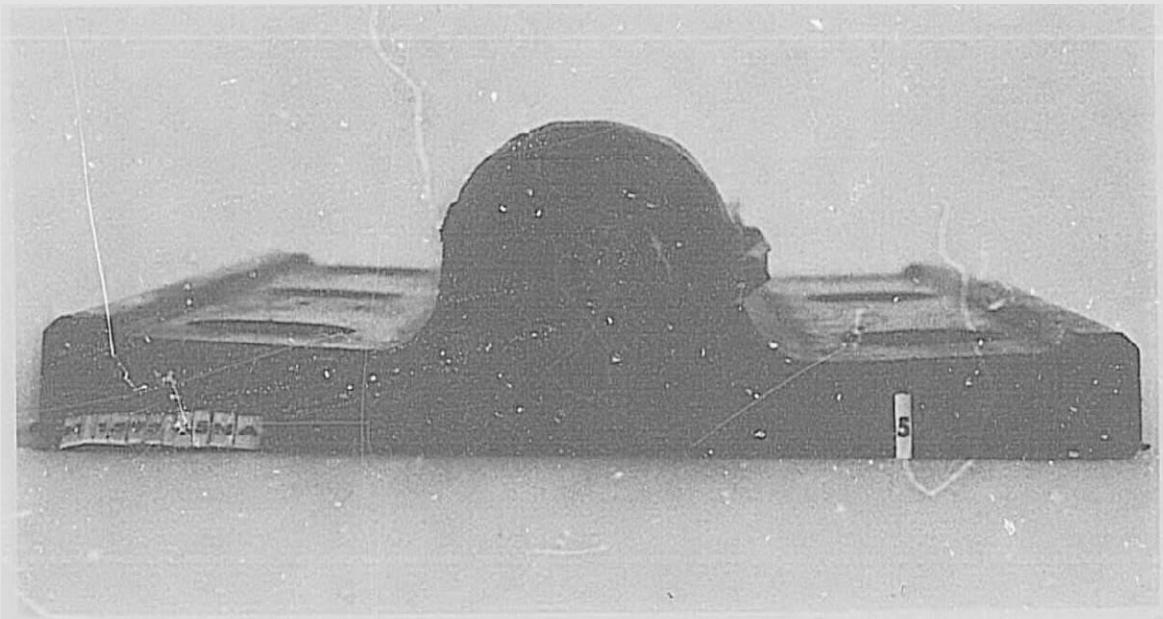

B. After testing to 275 feet (83.82 m).
Photo PX-D-60634

HIGH HEAD GATE SEAL STUDIES

Specimen 5 - Bulb clad with fluorocarbon

Figure 8
Report Hyd-582

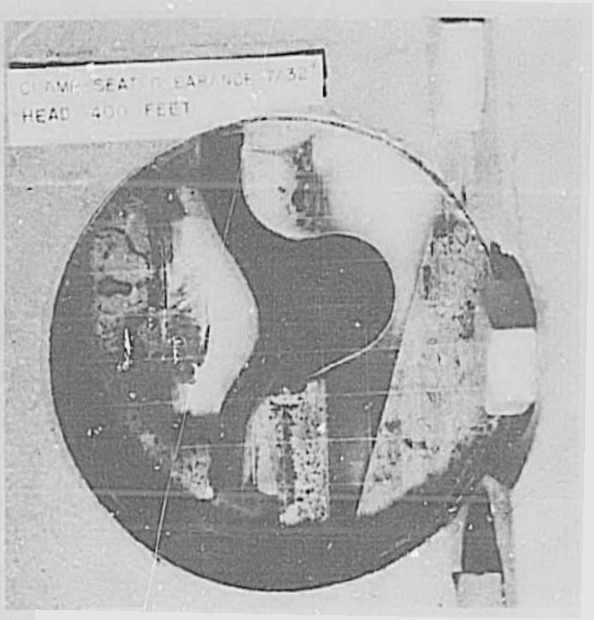

A. Seal bulb extended during closing cycle.
Photo PX-D-60635

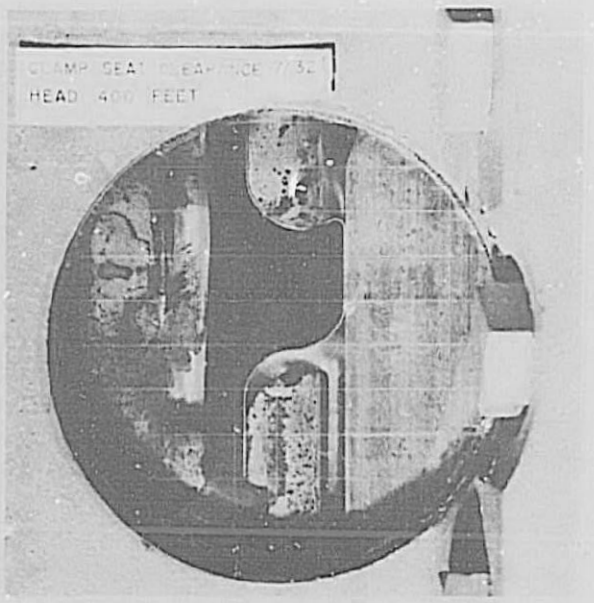

B. Gate in closed position. Photo PX-D-60636

HIGH HEAD GATE SEAL STUDIES

Specimen 7 in Test Rig

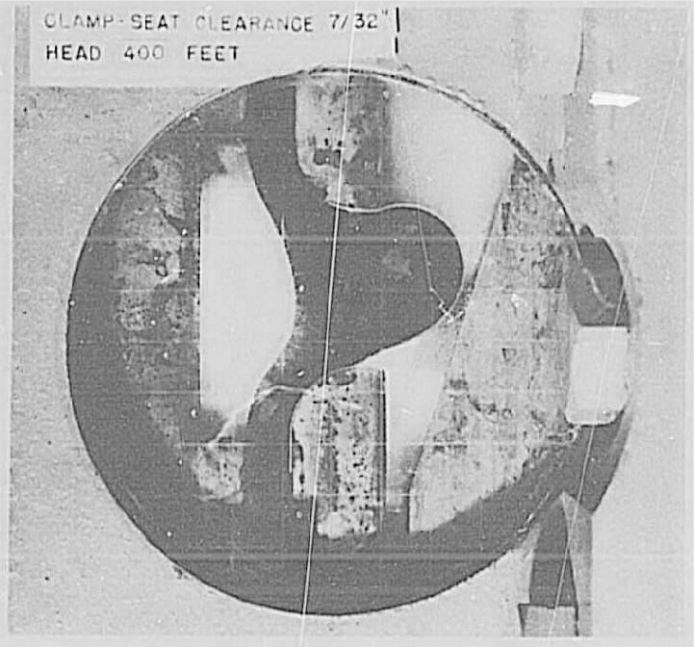

A. Seal bulb extended during closing cycle.
Photo PX-D-60637

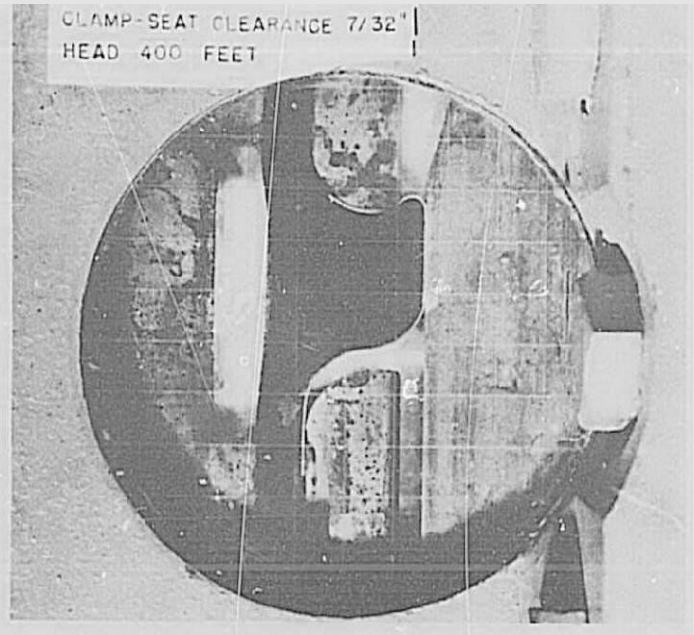

B. Gate in closed position. Photo PX-D-60638

HIGH HEAD GATE SEAL STUDIES

Specimen 8 in Test Rig

Figure 10
Report Hyd-582

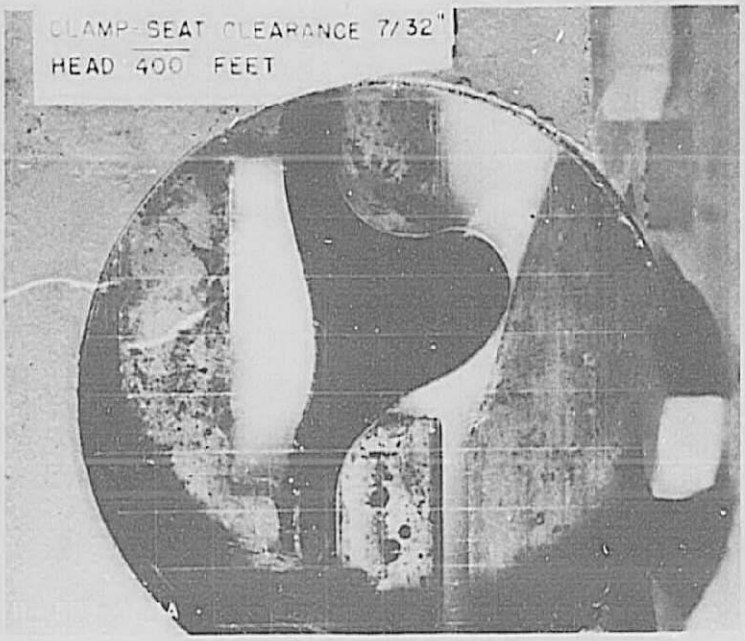

A. Seal bulb extended during closing cycle.
Photo PX-D-60639

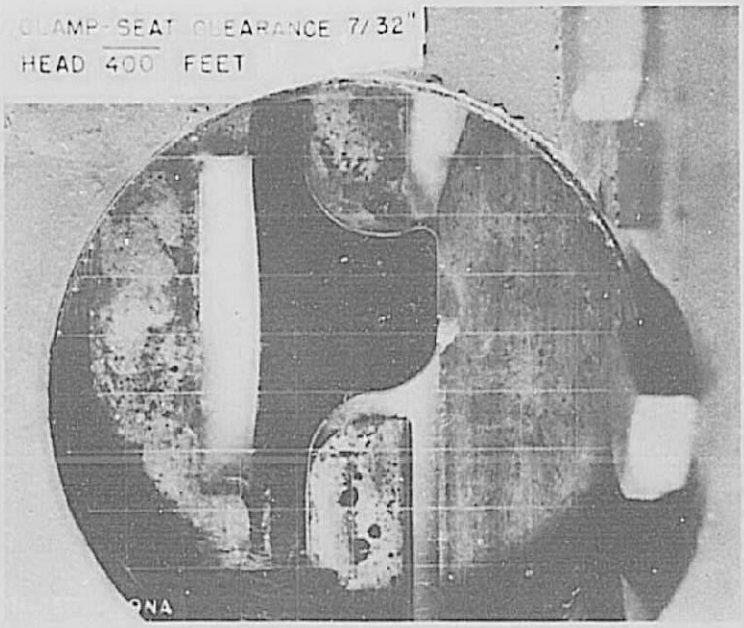

B. Gate in closed position. Photo PX-D-60640

HIGH HEAD GATE SEAL STUDIES

Specimen 13 in Test Rig

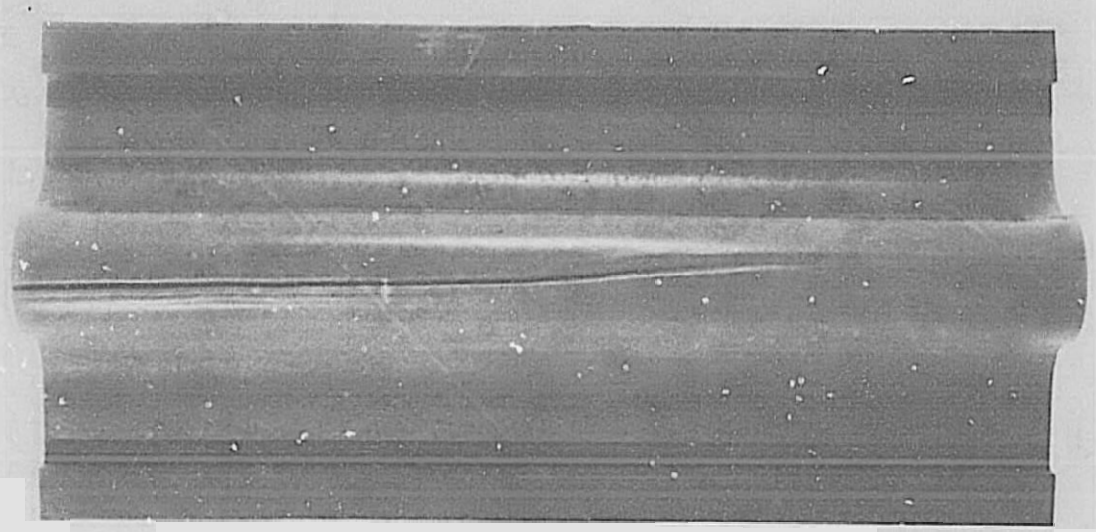

7

Photo PX-D-60641

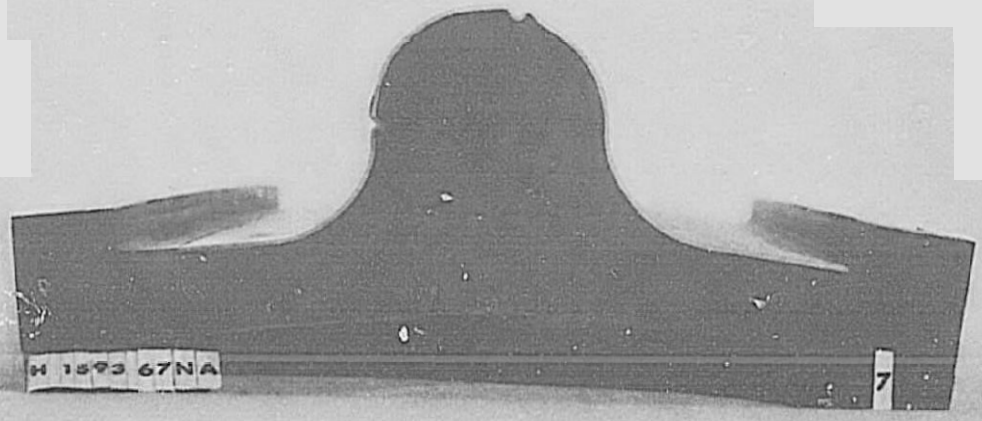

Photo PX-D-60642

HIGH HEAD GATE SEAL STUDIES

Specimen 7 After Testing to 450 Feet (137.16 m)

Figure 12
Report Hyd-582

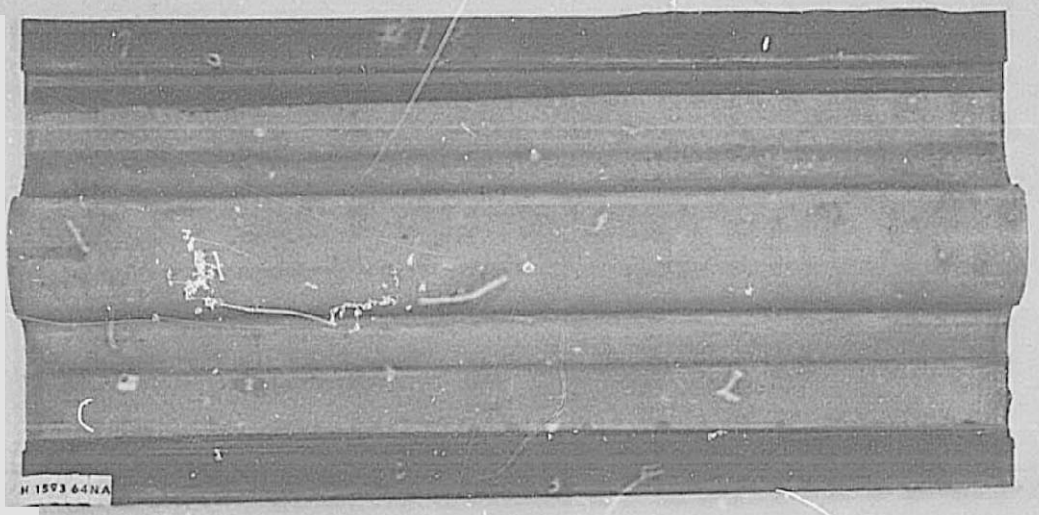

Photo PX-D-60643

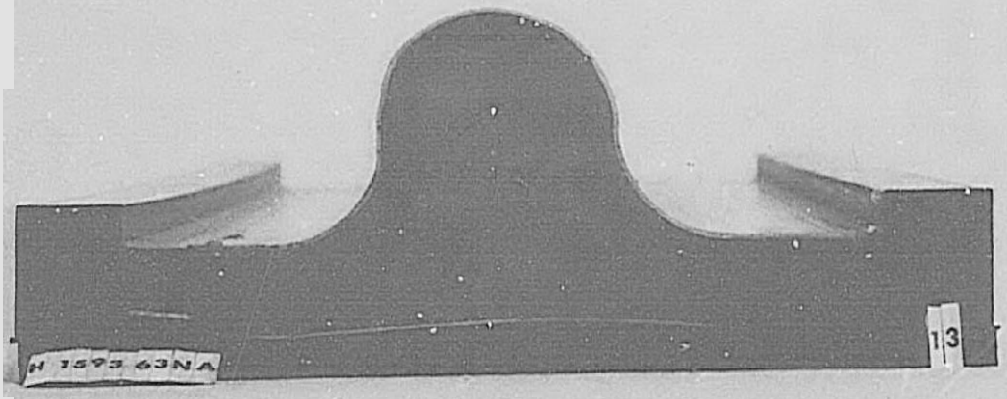

Photo PX-D-60644

HIGH HEAD GATE SEAL STUDIES

Specimen 13 After Testing to 600 Feet (182.88 m)

Specimen 13 - Green fluorocarbon over bulb and both stems and brass backing – Tested with $\frac{7}{32}$" clamp-to-seat clearance

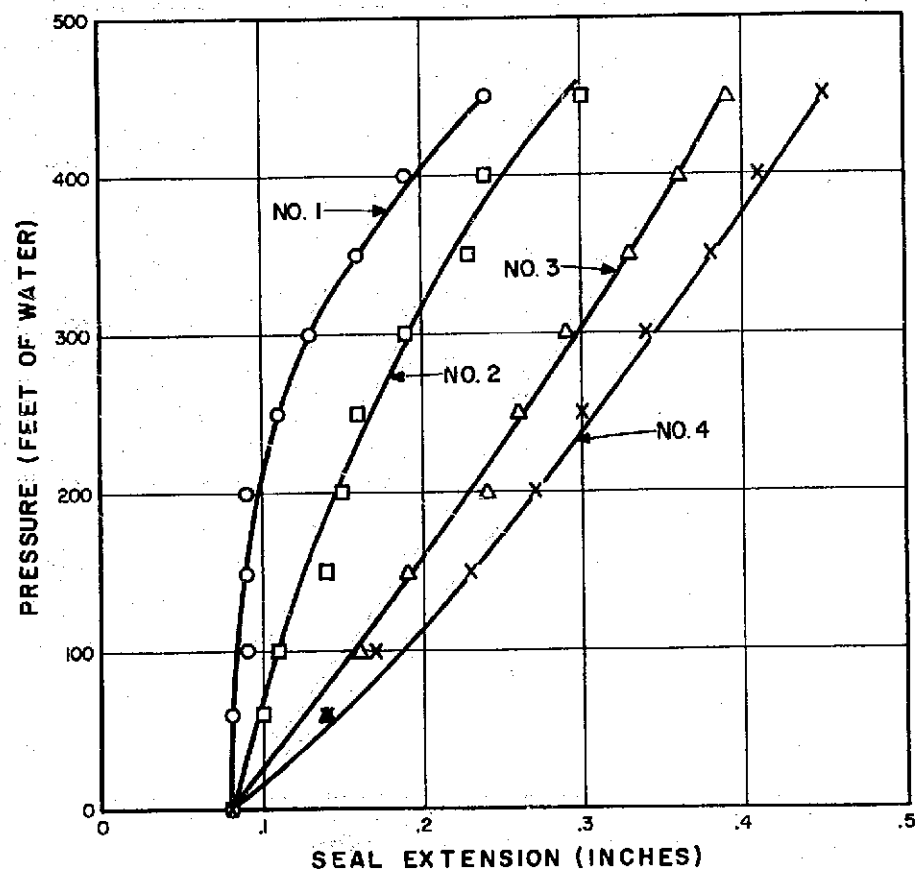

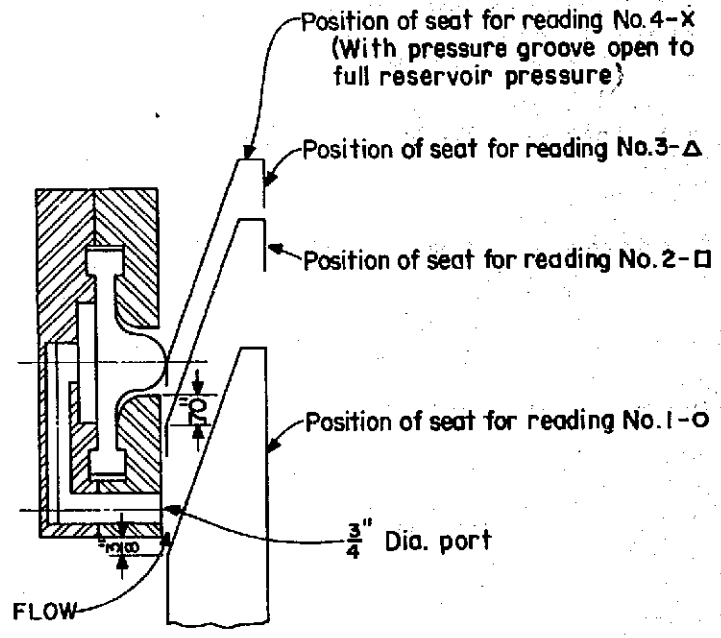

HIGH HEAD GATE SEAL STUDIES

SEAL BULB EXTENSION CURVES FOR SPECIMEN 13-
TESTED WITH THE AUTOMATIC RETRACTION-EXTENSION SCHEME

FIGURE 13
REPORT HYD-582

GPO 842-903

7-1750
(2-67)
Bureau of Reclamation

CONVERSION FACTORS--BRITISH TO METRIC UNITS OF MEASUREMENT

The following conversion factors adopted by the Bureau of Reclamation are those published by the *American Society for* Testing and Materials (ASTM Metric Practice Guide, January 1964) except that additional factors (*) commonly used in the Bureau have been added. Further discussion of definitions of quantities and units is given on pages 10-11 of the ASTM Metric Practice Guide.

The metric units and conversion factors adopted by the ASTM are based on the "International System of Units" (designated SI for Systeme International d'Unites), fixed by the International Committee for Weights and Measures; this system is also known as the Giorgi or MKSA (meter-kilogram (mass)-second-ampere) system. This system has been adopted by the International Organization for Standardization in ISO Recommendation R-31.

The metric technical unit of force is the kilogram-force; this is the force which, when applied to a body having a mass of 1 kg, gives it an acceleration of 9.80665 m/sec/sec, the standard acceleration of free fall toward the earth's center for sea level at 45 deg latitude. The metric unit of force in SI units is the newton (N), which is defined as that force which, when applied to a body having a mass of 1 kg, gives it an acceleration of 1 m/sec/sec. These units must be distinguished from the (inconstant) local weight of a body having a mass of 1 kg; that is, the weight of a body is that force with which a body is attracted to the earth and is equal to the mass of a body multiplied by the acceleration due to gravity. However, because it is general practice to use "pound" rather than the technically correct term "pound-force," the term "kilogram" (or derived mass unit) has been used in this guide instead of "kilogram-force" in expressing the conversion factors for forces. The newton unit of force will find increasing use, and is essential in SI units.

Table I

QUANTITIES AND UNITS OF SPACE

Multiply	By	To obtain
	LENGTH	
Mil	25.4 (exactly)	Micron
Inches	25.4 (exactly)	Millimeters
	2.54 (exactly)*	Centimeters
Feet	30.48 (exactly)	Centimeters
	0.3048 (exactly)*	Meters
	0.0003048 (exactly)*	Kilometers
Yards	0.9144 (exactly)	Meters
Miles (statute)	1,609.344 (exactly)*	Meters
	1.609344 (exactly)	Kilometers
	AREA	
Square inches	6.4516 (exactly)	Square centimeters
Square feet	929.03*	Square centimeters
	0.092903	Square meters
Square yards	0.836127	Square meters
Acres	0.40469*	Hectares
	4,046.9*	Square meters
	0.0040469*	Square kilometers
Square miles	2.58999	Square kilometers
	VOLUME	
Cubic inches	16.3871	Cubic centimeters
Cubic feet	0.0283168	Cubic meters
Cubic yards	0.764555	Cubic meters
	CAPACITY	
Fluid ounces (U.S.)	29.5737	Cubic centimeters
	29.5729	Milliliters
Liquid pints (U.S.)	0.473179	Cubic decimeters
	0.473166	Liters
Quarts (U.S.)	946.358*	Cubic centimeters
	0.946331*	Liters
Gallons (U.S.)	3,785.43*	Cubic centimeters
	3.78543	Cubic decimeters
	3.78533	Liters
	0.00378543*	Cubic meters
Gallons (U.K.)	4.54609	Cubic decimeters
	4.54596	Liters
Cubic feet	28.3160	Liters
Cubic yards	764.55*	Liters
Acre-feet	1,233.5*	Cubic meters
	1,233,500*	Liters

Table II

QUANTITIES AND UNITS OF MECHANICS

Multiply	By	To obtain
MASS		
Grains (1/7,000 lb)	64.79891 (exactly)	Milligrams
Troy ounces (480 grains)	31.1035	Grams
Ounces (avdp)	28.3495	Grams
Pounds (avdp)	0.45359237 (exactly)	Kilograms
Short tons (2,000 lb)	907.185	Kilograms
	0.907185	Metric tons
Long tons (2,240 lb)	1,016.05	Kilograms
FORCE/AREA		
Pounds per square inch	0.070307	Kilograms per square centimeter
	0.689476	Newtons per square centimeter
Pounds per square foot	4.88243	Kilograms per square meter
	47.8803	Newtons per square meter
MASS/VOLUME (DENSITY)		
Ounces per cubic inch	1.72999	Grams per cubic centimeter
Pounds per cubic foot	16.0185	Kilograms per cubic meter
	0.0160185	Grams per cubic centimeter
Tons (long) per cubic yard	1.32894	Grams per cubic centimeter
MASS/CAPACITY		
Ounces per gallon (U.S.)	7.4893	Grams per liter
Ounces per gallon (U.K.)	6.2362	Grams per liter
Pounds per gallon (U.S.)	119.829	Grams per liter
Pounds per gallon (U.K.)	99.779	Grams per liter
BENDING MOMENT OR TORQUE		
Inch-pounds	0.011521	Meter-kilograms
	1.12985×10^6	Centimeter-dynes
Foot-pounds	0.138255	Meter-kilograms
	1.35582×10^7	Centimeter-dynes
Foot-pounds per inch	5.4431	Centimeter-kilograms per centimeter
Ounce-inches	72.008	Gram-centimeters
VELOCITY		
Feet per second	30.48 (exactly)	Centimeters per second
	0.3048 (exactly)*	Meters per second
Feet per year	0.965873×10^{-6}*	Centimeters per second
Miles per hour	1.609344 (exactly)	Kilometers per hour
	0.44704 (exactly)	Meters per second
ACCELERATION*		
Feet per second^2	0.3048*	Meters per second^2
FLOW		
Cubic feet per second (second-feet)	0.028317*	Cubic meters per second
Cubic feet per minute	0.4719	Liters per second
Gallons (U.S.) per minute	0.06309	Liters per second
FORCE*		
Pounds	0.453592*	Kilograms
	4.4482*	Newtons
	4.4482×10^{-5}*	Dynes
WORK AND ENERGY*		
British thermal units (Btu)	0.252*	Kilogram calories
	1,055.06	Joules
Btu per pound	2.326 (exactly)	Joules per gram
Foot-pounds	1.35582*	Joules
POWER		
Horsepower	745.700	Watts
Btu per hour	0.293071	Watts
Foot-pounds per second	1.35582	Watts
HEAT TRANSFER		
Btu in./hr ft^2 deg F (k, thermal conductivity)	1.442	Milliwatts/cm deg C
	0.1240	Kg cal/hr m deg C
Btu ft/hr ft^2 deg F	1.4880*	Kg cal m/hr m^2 deg C
Btu/hr ft^2 deg F (C, thermal conductance)	0.568	Milliwatts/cm^2 deg C
	4.882	Kg cal/hr m^2 deg C
Deg F hr ft^2/Btu (R, thermal resistance)	1.761	Deg C cm^2/milliwatt
Btu/lb deg F (c, heat capacity)	4.1868	J/g deg C
Btu/lb deg F	1.000*	Cal/gram deg C
Ft^2/hr (thermal diffusivity)	0.2581	Cm^2/sec
	0.09290*	M^2/hr
WATER VAPOR TRANSMISSION		
Grains/hr ft^2 (water vapor transmission)	16.7	Grams/24 hr m^2
Perms (permeance)	0.659	Metric perms
Perm-inches (permeability)	1.67	Metric perm-centimeters

Table III

OTHER QUANTITIES AND UNITS

Multiply	By	To obtain
Cubic feet per square foot per day (seepage)	304.8*	Liters per square meter per day
Pound-seconds per square foot (viscosity)	4.8824*	Kilogram second per square meter
Square feet per second (viscosity)	0.092903*	Square meters per second
Fahrenheit degrees (change)*	5/9 exactly	Celsius or Kelvin degrees (change)*
Volts per mil	0.03937	Kilovolts per millimeter
Lumens per square foot (foot-candles)	10.764	Lumens per square meter
Ohm-circular mils per foot	0.001662	Ohm-square millimeters per meter
Millicuries per cubic foot	35.3147*	Millicuries per cubic meter
Milliamps per square foot	10.7639*	Milliamps per square meter
Gallons per square yard	4.527219*	Liters per square meter
Pounds per inch	0.17858*	Kilograms per centimeter

GPO 835-159

ABSTRACT

Studies were made to develop rubber seals suitable for use on wheel- and roller-mounted gates operating under high heads. During the closing cycle under unbalanced pressure conditions, the seal bulb tends to be pinched between the seal clamp and seal seat. Six factors affecting this pinching were varied in an attempt to find the optimum seal assembly. Eleven double-stem seal designs, utilizing different combinations of fluorocarbon and brass cladding and rubber compositions, were tested at heads up to 600 ft (182.88 m). The tests were conducted in a special test rig which accommodated full-size seal specimens, 12-1/8 in. (30.798 cm) long. The tests included measuring the seal bulb extension, and photographing and observing the general behavior of the seal under load during opening and closing cycles of the gate.

ABSTRACT

Studies were made to develop rubber seals suitable for use on wheel- and roller-mounted gates operating under high heads. During the closing cycle under unbalanced pressure conditions, the seal bulb tends to be pinched between the seal clamp and seal seat. Six factors affecting this pinching were varied in an attempt to find the optimum seal assembly. Eleven double-stem seal designs, utilizing different combinations of fluorocarbon and brass cladding and rubber compositions, were tested at heads up to 600 ft (182.88 m). The tests were conducted in a special test rig which accommodated full-size seal specimens, 12-1/8 in. (30.798 cm) long. The tests included measuring the seal bulb extension, and photographing and observing the general behavior of the seal under load during opening and closing cycles of the gate.

ABSTRACT

Studies were made to develop rubber seals suitable for use on wheel- and roller-mounted gates operating under high heads. During the closing cycle under unbalanced pressure conditions, the seal bulb tends to be pinched between the seal clamp and seal seat. Six factors affecting this pinching were varied in an attempt to find the optimum seal assembly. Eleven double-stem seal designs, utilizing different combinations of fluorocarbon and brass cladding and rubber compositions, were tested at heads up to 600 ft (182.88 m). The tests were conducted in a special test rig which accommodated full-size seal specimens, 12-1/8 in. (30.798 cm) long. The tests included measuring the seal bulb extension, and photographing and observing the general behavior of the seal under load during opening and closing cycles of the gate.

ABSTRACT

Studies were made to develop rubber seals suitable for use on wheel- and roller-mounted gates operating under high heads. During the closing cycle under unbalanced pressure conditions, the seal bulb tends to be pinched between the seal clamp and seal seat. Six factors affecting this pinching were varied in an attempt to find the optimum seal assembly. Eleven double-stem seal designs, utilizing different combinations of fluorocarbon and brass cladding and rubber compositions, were tested at heads up to 600 ft (182.88 m). The tests were conducted in a special test rig which accommodated full-size seal specimens, 12-1/8 in. (30.798 cm) long. The tests included measuring the seal bulb extension, and photographing and observing the general behavior of the seal under load during opening and closing cycles of the gate.

Mohrbacher, R D
HIGH HEAD GATE SEAL STUDIES
USBR Lab Rept Hyd-582, Hyd Br, March 1968. Bureau of Reclamation, Denver, Colo, 10 p, 13 fig, 2 tab, 1 ref
DESCRIPTORS-- *gate seals/ *gates/ roller gates/ high pressure gates/ test facilities/ test specimens/ test procedures/ *hydraulic gates and valves/ mechanical engineering/ rubber/ fixed wheel gates/ leakage/ water pressures/ friction/ compression/ flexibility/ vibrations/ deformation/ loads
IDENTIFIERS-- emergency closures

Mohrbacher, R D
HIGH HEAD GATE SEAL STUDIES
USBR Lab Rept Hyd-582, Hyd Br, March 1968. Bureau of Reclamation, Denver, Colo, 10 p, 13 fig, 2 tab, 1 ref
DESCRIPTORS-- *gate seals/ *gates/ roller gates/ high pressure gates/ test facilities/ test specimens/ test procedures/ *hydraulic gates and valves/ mechanical engineering/ rubber/ fixed wheel gates/ leakage/ water pressures/ friction/ compression/ flexibility/ vibrations/ deformation/ loads
IDENTIFIERS-- emergency closures

Mohrbacher, R D
HIGH HEAD GATE SEAL STUDIES
USBR Lab Rept Hyd-582, Hyd Br, March 1968. Bureau of Reclamation, Denver, Colo, 10 p, 13 fig, 2 tab, 1 ref
DESCRIPTORS-- *gate seals/ *gates/ roller gates/ high pressure gates/ test facilities/ test specimens/ test procedures/ *hydraulic gates and valves/ mechanical engineering/ rubber/ fixed wheel gates/ leakage/ water pressures/ friction/ compression/ flexibility/ vibrations/ deformation/ loads
IDENTIFIERS-- emergency closures

Mohrbacher, R D
HIGH HEAD GATE SEAL STUDIES
USBR Lab Rept Hyd-582, Hyd Br, March 1968. Bureau of Reclamation, Denver, Colo, 10 p, 13 fig, 2 tab, 1 ref
DESCRIPTORS-- *gate seals/ *gates/ roller gates/ high pressure gates/ test facilities/ test specimens/ test procedures/ *hydraulic gates and valves/ mechanical engineering/ rubber/ fixed wheel gates/ leakage/ water pressures/ friction/ compression/ flexibility/ vibrations/ deformation/ loads
IDENTIFIERS-- emergency closures