UNITED STATES
DEPARTMENT OF THE INTERIOR
BUREAU OF RECLAMATION

MASTER
FILE COPY
BUREAU OF RECLAMATION
HYDRAULIC LABORATORY
NOT TO BE REMOVED FROM FILES

HYDRAULIC MODEL STUDIES OF THE CEDAR BLUFF DAM OUTLET WORKS REGULATING GATE AND STILLING BASIN--CEDAR BLUFF UNIT--MISSOURI RIVER BASIN PROJECT

Hydraulic Laboratory Report No. Hyd.-245

RESEARCH AND GEOLOGY DIVISION

BRANCH OF DESIGN AND CONSTRUCTION
DENVER, COLORADO

AUGUST 22, 1950

CONTENTS

	Page
Purpose	1
Conclusions	1
Recommendations	2
Introduction	2
The Model Studies	3
Description of the 1:12 Scale Model	3
Initial Testing of the Outlet Works	3
Investigation of the Slide Gate	3
Standard Design	3
Flat Gate Leaf	5
Concave Gate Leaf	5
Gate Slot Deflectors	5
Discharge Capacity Curves	6
Investigation of the Stilling Basin	6
Operation with the Modified Gate	6
Effect of Baffle Piers	7
Training Wall Rate of Divergence	7
Tail Water Elevation Requirements	7

LIST OF FIGURES

Figure	
1	Location Map.
2	Outlet Works, plan and section.
3	1:12 scale model.
4	Effect of gate design on flow distribution--gate 23% open, 80 foot head, and 200 cfs discharge.
5	Standard 4'x5' high-pressure gate.
6	Concave leaf designs.
7	Concave gate leaf--Design 12.
8	Gate slot deflectors.
9	Modified gate with flat leaf--operating in wide-open and 5% closed positions.
10	Discharge capacity curves. Standard Design--Modified Design-- with either flat or concave leaf.
11	Discharge capacity curves Outlet Works.
12	Flow conditions in the stilling basin.
13	Alignment of the stilling basin training walls--original design.
14	Tail water elevation required to prevent sweeping pool out of the stilling basin and amount of tail water available.

UNITED STATES
DEPARTMENT OF THE INTERIOR
BUREAU OF RECLAMATION

Branch of Design and Construction
Research and Geology Division
Denver, Colorado
August 22, 1950

Laboratory Report No. 245
Hydraulic Laboratory
Compiled by: W. P. Simmons, Jr.
Reviewed by: J. W. Ball
W. C. Case

Subject: Hydraulic model studies of the Cedar Bluff Dam Outlet Works regulating gate and stilling basin--Cedar Bluff Unit--Missouri River Basin Project.

PURPOSE

To determine the flow characteristics of the Cedar Bluff Dam Outlet Works regulating gate and the effectiveness of the stilling basin in dissipating the destructive energy of the released water.

CONCLUSIONS

1. The standard high-pressure slide gate (Figure 5) is not suitable for use in Cedar Bluff Outlet Works or in any similar structure where the flow passes directly into a stilling basin which utilizes a hydraulic jump for energy dissipation. At small gate openings and at heads greater than 30 feet the flow from the gate forms a solid, high-velocity jet in the center of the chute downstream from the gate (Figure 4A). At heads of 50 feet or more the jet springs free from the floor of the chute and at heads of 90 feet or more the jet sweeps the water out of the stilling basin.

2. The convex upstream face and rounded upstream lower edge of the gate leaf, together with the wide gate slots of the standard design, produce a nonuniform-flow contraction through the gate which results in the flow concentration described in Conclusion No. 1.

3. Modifying the gate by replacing the standard convex leaf with a flat one, 3 inches thick, and narrowing the gate slots to accomodate the thinner leaf greatly improve the flow characteristics of the gate.

4. A better flow distribution than that with the flat leaf is obtained by using the concave leaf tested in the laboratory (Figure 7).

5. The wedge-shaped deflectors placed immediately upstream from the gate slots in the design recommended for the Cedar Bluff Outlet Works deflect the water past the slots and prevent regions of severe subatmospheric pressure and possible cavitation (Figure 8).

6. When the gate is operated wide open, a flow contraction and a subsequent expansion occur as the water passes the gate slot deflectors. The expanding flow impinges on the training walls and forms large, objectionable fins. These fins are eliminated by closing the gate about 5 percent.

7. The Cedar Bluff Outlet Works stilling basin, as originally designed effectively dissipates the destructive energy of the discharging water when this water enters the basin with uniform distribution.

8. The reduction in the rate of divergence of the stilling basin training walls at Station 11+31.50 (Figure 13) results in objectionable fins along the walls. By extending the training walls in straight lines from the gate to Station 11+77.50 (Figure 3), the fins are eliminated.

9. Discharge capacity curves for the standard design and for the modified design with narrow gate slots, slot deflectors, and either the flat or the concave leaf are presented in Figure 10.

10. Discharge capacity curves for the outlet works with the modified gate are presented in Figure 11.

RECOMMENDATIONS

1. Use the flat gate leaf together with narrow gate slots and gate slot deflectors in the Cedar Bluff Outlet Works structure.

2. Limit the gate opening to about 95 percent of full-open except in cases of emergency when the full capacity is required.

3. Construct the stilling basin training walls in straight lines from the gate to Station 11+77.50.

INTRODUCTION

Cedar Bluff Dam is located on the Smoky Hill River, 22 miles west of Hays and 19 miles south of Wakeeney in West-Central Kansas (Figure 1). It is a compacted earth structure rising 136 feet above the riverbed and forms a reservoir with a storage capacity of 768,400 acre-feet. An overflow spillway to pass flood waters is provided at the right bank of the dam and an outlet works for the normal release of river water is provided near the left bank.

The outlet works consist of a trashrack structure, a conduit which passes through the dam, a 4- by 5-foot emergency gate, a 4- by 5-foot regulating gate, a concrete stilling basin, and a channel which conveys the discharged water to the riverbed (Figure 2). Present plans call for the release of 200 second-feet of water at a normal operating head of 80 feet and a maximum head of 130 feet. Hydraulic model studies were

conducted on the regulating gate and the stilling basin to determine the operating characteristics of these structures and to make any design changes indicated to insure proper hydraulic operation.

THE MODEL STUDIES

Description of the 1:12 Scale Model

The model was constructed on a 1:12 scale in a wooden box lined with sheet metal (Figure 3). The outlet works conduit was constructed of sheet metal and terminated in a model of the 4- by 5-foot high-pressure regulating slide gate. The conduit was made shorter than the true scale length because the study was concerned only with the outlet end. However, the proper model to prototype relationship of pressures and velocities at the gate was maintained for any discharge by proper settings of the gate and the 6-inch control valve. A flow straightener was placed in the conduit immediately downstream from the control valve to provide uniform flow into the model. The stilling basin chute and floor were formed in concrete screeded to metal templates and the training walls were made of oil-treated plywood. A section representing 148 feet of the canal downstream from the stilling basin was formed in pea gravel. The stilling basin tail water elevation was regulated by a tailgate placed at the lower end of the model. Suitable gages were used to measure the tail water elevation and the pressure head in the pipe immediately upstream from the model gate. Water was supplied to the model by the laboratory system which contained venturi meters for measuring the rate of flow.

Initial Testing of Outlet Works

At large openings the flow through the standard gate occurred smoothly. However, at near-closed gate settings and at heads greater than 30 feet the flow became concentrated into a single, high-velocity jet in the center of the chute downstream from the gate. At heads of 50 feet or more the jet sprang free from the chute floor and impinged on the surface of the stilling pool (Figure 4A). At the 20-percent open position and at a head of 90 feet the action of the jet was so violent that the tail water was swept completely out of the stilling basin. It was obvious that the flow through the gate would have to be improved if the outlet works were to function properly.

Investigation of Slide Gate

Standard Design

Model tests were conducted in an attempt to isolate the effect of various parts of the standard gate design on the flow pattern. The effects of the 2-inch offset in the floor of the gate, the gate slots, and the shape of the gate leaf were investigated.

The centerline of the downstream gate frame of the 4- by 5-foot high-pressure slide gate is 2 inches lower than the centerline of the

upstream frame. This results in a 2-inch offset in the floor of the gate structure, the floor at the lower end of the upstream frame curving downward on a 30-inch radius to meet the bottom seal and the floor of the downstream frame (Figure 5). To determine the effect of this offset on the flow through the gate, the floor of the downstream frame was covered with beeswax so that the passage floor continued level from the upstream frame until it faired into the chute. The flow through the modified gate was similar to that with the offset, except that less spray was present (Figure 4B), thereby indicating that the offset was not a major factor contributing to the flow concentration. The beeswax was therefore removed.

The effect of the gate slots on the flow when the standard leaf was used was determined by filling the portions of the slots exposed to the discharging water with modeling clay to make the sidewall surfaces continuous. No basic change in the flow pattern resulted from this alteration; the only effect was a reduction in the amount of spray.

The other feature tested was the shape of the gate leaf. The leaf of the standard gate is constructed with the downstream face flat, the upstream face convex in the horizontal plane, and an 18-1/8-inch radius in the vertical plane at the lower upstream edge (Figure 5). To determine the effect on the flow of changing the shape of the leaf, rectangular bars equivalent to 3, 6, and 9 inches high, 6 inches thick, and extending the full width of the gate were fastened to the bottom of the model leaf. Considerable improvement in the flow resulted, the greatest improvement being noted for the highest bar. In all cases when leaf bars were used the gate slots had a pronounced effect on the flow. With the slots open there was a heavy spray and the flow sprang free of the chute floor. With the slots filled with modeling clay the flow was smooth, spread relatively well on the chute floor, and showed little tendency to spring free of the floor. The disturbance produced by the slots when the bars were used was due to the control point being at the upstream bottom edge of the gate leaf. This permitted the high-velocity water to enter the slots and cause considerable turbulence.

To move the control point as far as possible downstream, a leaf extension equivalent to 1 inch in thickness and 7-1/2 inches high was fastened to the bottom downstream corner of the leaf. The flow obtained with this modification and with the gate slots open compared favorably with that obtained with the 9-inch high bar and the slots filled. Little improvement was obtained in the flow pattern by filling the gate slots when the leaf extension was used.

The model tests conducted to this point indicated that the convex upstream face and the rounded upstream lower edge of the gate leaf were the primary causes of the concentrated flow. The secondary cause was the disturbance produced by the wide gate slots when the point of control in the gate was at the upstream bottom edge of the leaf.

Flat Gate Leaf

A new gate leaf was developed through the combined efforts of the Mechanical Design Section and the Hydraulic Laboratory which could be used for this and other installations. This gate leaf eliminated or minimized the sources of flow disturbances found in the standard leaf. First, the upstream face of the leaf was made flat. Second, the bottom of the gate leaf was made with a square edge on the upstream face. Third, the gate thickness was reduced from the previous minimum of 6.6 inches to 3 inches. This permitted the use of narrow gate slots (3.8 inches wide as compared with the previous width of 6.8 inches) with a corresponding reduction in the flow disturbances produced by the slots. All of these design changes were readily adaptable to the standard gate frame.

The performance of the gate structure using the flat leaf and the narrow gate slots was considerably better than any previous design. The spreading action in the chute was greatly improved even though most of the water was still concentrated in a stream the width of the gate (Figure 4C). This concentration resulted in a rougher stilling pool action than would be obtained with an even sheet of water entering the pool. There was no tendency for the flow to spring from the chute floor and the water could not be swept out of the stilling basin under any operating condition of the prototype structure.

The flat gate-leaf design, although recommended for use in the Cedar Bluff Outlet Works, does not represent the best design, from a hydraulic standpoint, evolved from the model studies. The design was chosen because it was a modification readily adaptable to the standard gate frame, was acceptable structurally, and presented few manufacturing difficulties.

Concave Gate Leaf

Further studies were conducted to develop a gate leaf design which would produce a better flow pattern in the outlet chute than the flat leaf. It was reasoned that because the change from a convex to a flat surface on the upstream face of the gate improved the flow characteristics of the gate, additional improvement could be realized by making this face concave. Accordingly, model tests were made on a number of designs, all essentially concave on the upstream face (Figure 6). Design 12 (Figures 6 and 7) was evolved from this study and, when used in the standard gate frame with narrow gate slots, it produced a nearly uniform sheet that moved smoothly down the chute into the stilling basin. The action of the pool was excellent, and the variation in water surface from wave crest to trough was less than that for any other design. Leaf Design 12 should therefore be considered for use in future structures where uniform flow is required downstream from the gate.

Gate Slot Deflectors

Pitting by cavitation in the region immediately downstream from gate slots has occurred in Bureau structures and those of other engineering

organizations. The damage has been so severe in some cases that investigations were made to find means of eliminating the low-pressure regions causing the cavitation. Laboratory and field studies showed that these critical pressures could be avoided by placing wedge-shaped deflectors just upstream from the gate slots to direct the flow past the slots. In accordance with this experience slot deflectors, which extend into the passage 1 inch and faired upstream into the sidewalls at a 15° angle, were installed on the model gate with the flat leaf (Figure 8).

During the tests in which the deflectors were used, large fins formed along the training walls immediately downstream from the gate when the gate was operated in the full-open position (Figure 9A). An examination of the flow revealed that a contraction occurred as the water passed the slot deflectors, and as the water entered the outlet chute the stream spread at a rate greater than that at which the walls diverged. The water, therefore, impinged on the walls to form the fins. Further model tests showed that by closing the gate about 5 percent, the fins were entirely eliminated (Figure 9B). This partial gate closure reduced the maximum rate of discharge at an 80-foot head from 803 to 776 cfs, or about 3 percent. Since this reduction in capacity is not serious, it is recommended that the maximum gate opening be limited to 95 percent of full-open for all normal operating conditions. In cases of emergency, the maximum capacity may be obtained by opening the gate fully.

Discharge Capacity Curves

Discharge capacity curves were determined for the standard design (Figure 10A) and for the modified design with the narrow gate slots, slot deflectors, and either the flat or the concave leaf (Figure 10B). The capacity of the modified design is somewhat less than the standard design due to the obstruction caused by the slot deflectors and to the flow contraction which occurs downstream from the square edge of the leaf. The coefficient of discharged based on the total head on the gate centerline, the area of the conduit at the gate entrance, and the gate 100% open is 0.84 for the modified gate with either the flat or concave leaf, and is 0.95 for the standard gate.

The available total heads at the gate centerline after the losses through the conduit structure have been subtracted are shown in dashed lines in Figure 10A and B for heads of 80 and 100 feet (reservoir elevation 2144.0 and 2194.0 respectively).

Discharge capacity curves for the outlet works are presented in Figure 11 from which the discharge can be determined when the reservoir elevation and the gate setting are known.

Investigation of the Stilling Basin

Operation with the Modified Gate

Figure 12A shows the operation of the stilling basin at the design discharge of 200 second-feet at the normal head of 80 feet and with the

modified gate using the flat leaf. The operation of the basin at the near-maximum flow of 760 second-feet and a head of 80 feet is shown in Figure 12B. The velocity distribution at the end of the basin apron was good and no objectionable eddy currents were present. The maximum variation in water surface at the end of the apron, or the difference in elevation between the highest wave crest and the lowest trough for the discharge of 760 second-feet was 2 feet prototype. At the design flow of 200 second-feet the maximum variation in water surface was 1 foot prototype. The scour in the pea gravel used in the model at the canal entrance was negligible.

Effect of Baffle Piers

Baffle piers were installed in the model and moved upstream and downstream on the basin floor to determine, by visual examination, the optimum location in the basin. The best location was found to be Station 11+87.50 or 10 feet downstream from the toe of the basin chute. Little change in the operation or the appearance of the basin was noted with the piers installed. The profile of the water in the basin was determined both with and without the baffle piers installed, at flows of 200 and 750 second-feet and using the flat gate leaf. At both flows the change in the profile due to the piers was negligible. On the basis of these results, and because little difference was evident in the wave action and velocity distribution at the canal entrance, it was concluded that baffle piers were not required.

Training Wall Rate of Divergence

In the original design of the stilling basin, the divergence of the training walls from the gate to Station 11+31.50 was 1.43 feet in 10 feet, while the divergence from this point to Station 11+77.50 was 1.11 feet in 10 feet (Figure 13). The model tests showed that the gate discharge spread on the floor of the chute immediately downstream from the gate with the water near the walls flowing parallel to them. When the flow passed into the section of lesser divergence, the water was deflected inward, forming fins at the walls. These fins were present at all flows but were more pronounced when moderate quantities of water were released at high heads. By modifying the model training walls to provide straight surfaces with one rate of divergence from the gate to the pool entrance (Station 11+77.50), the fins caused by the change in divergence were eliminated. Therefore, this change was recommended for the prototype structure.

Tailwater Elevation Requirements

Further model tests were made to determine the tail water elevations required for various operating heads to prevent the water in the basin from being swept out. The results of the tests are shown in Figure 14, together with the tail water elevations which are expected to occur at the structure. It is apparent that in all cases the tail water elevation available will exceed the elevation required, and therefore, there is no danger of the water being swept from the basin.

FIGURE 1
HYD REPORT 245

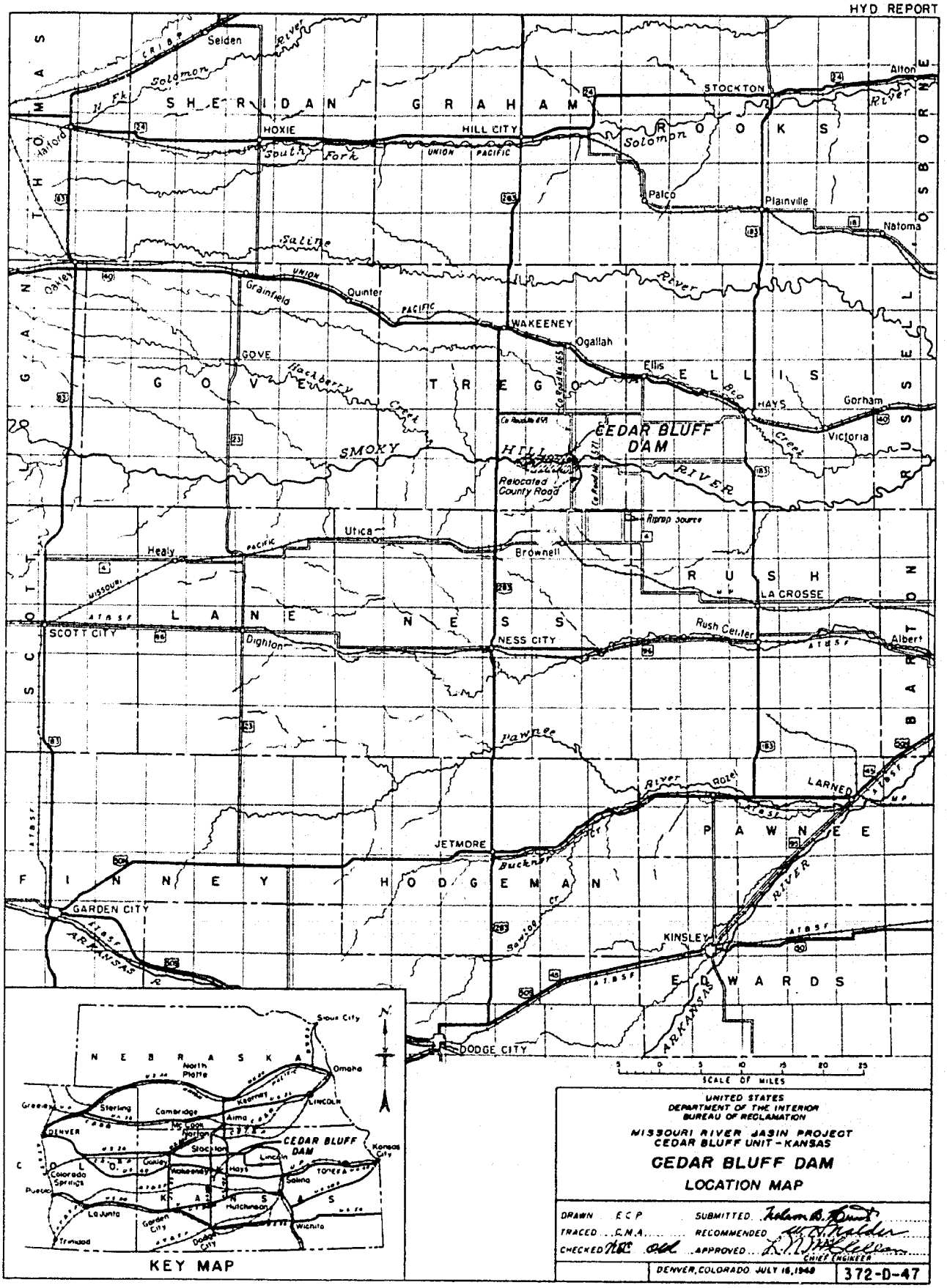

UNITED STATES
DEPARTMENT OF THE INTERIOR
BUREAU OF RECLAMATION

MISSOURI RIVER BASIN PROJECT
CEDAR BLUFF UNIT - KANSAS

CEDAR BLUFF DAM

LOCATION MAP

DRAWN E.C.P. SUBMITTED
TRACED C.M.A. RECOMMENDED
CHECKED APPROVED
CHIEF ENGINEER

DENVER, COLORADO JULY 16, 1949 | 372-D-47

FIGURE 2
HYD. REPORT 245

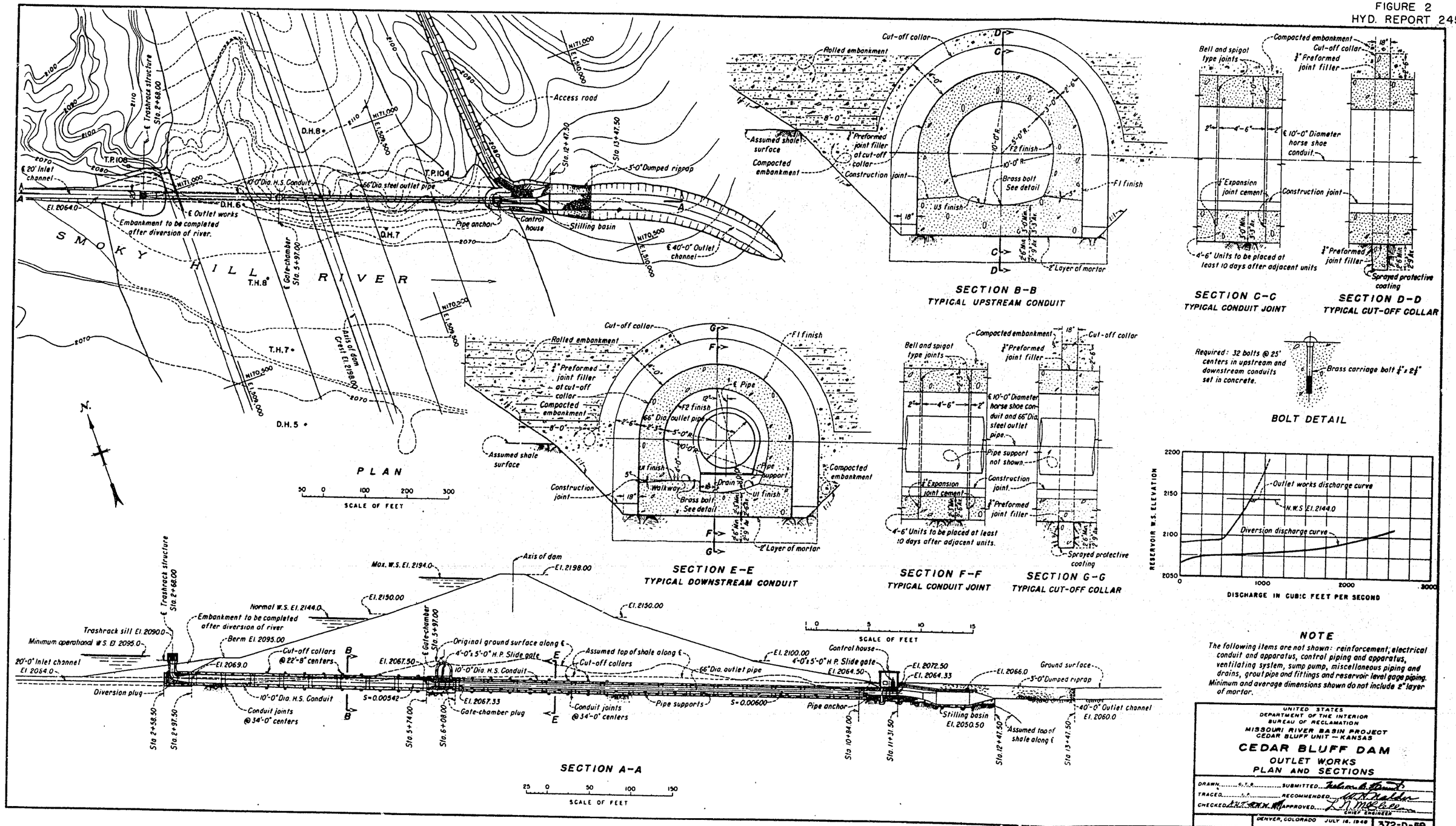

NOTE

The following items are not shown: reinforcement, electrical conduit and apparatus, control piping and apparatus, ventilating system, sump pump, miscellaneous piping and drains, grout pipe and fittings and reservoir level gage piping. Minimum and average dimensions shown do not include 2" layer of mortar.

UNITED STATES
DEPARTMENT OF THE INTERIOR
BUREAU OF RECLAMATION
MISSOURI RIVER BASIN PROJECT
CEDAR BLUFF UNIT — KANSAS

CEDAR BLUFF DAM

OUTLET WORKS
PLAN AND SECTIONS

DRAWN G.T.B. SUBMITTED
TRACED RECOMMENDED
CHECKED APPROVED
CHIEF ENGINEER

DENVER, COLORADO JULY 16, 1948 372-D-59

FIGURE 3

HYD. REPORT 245

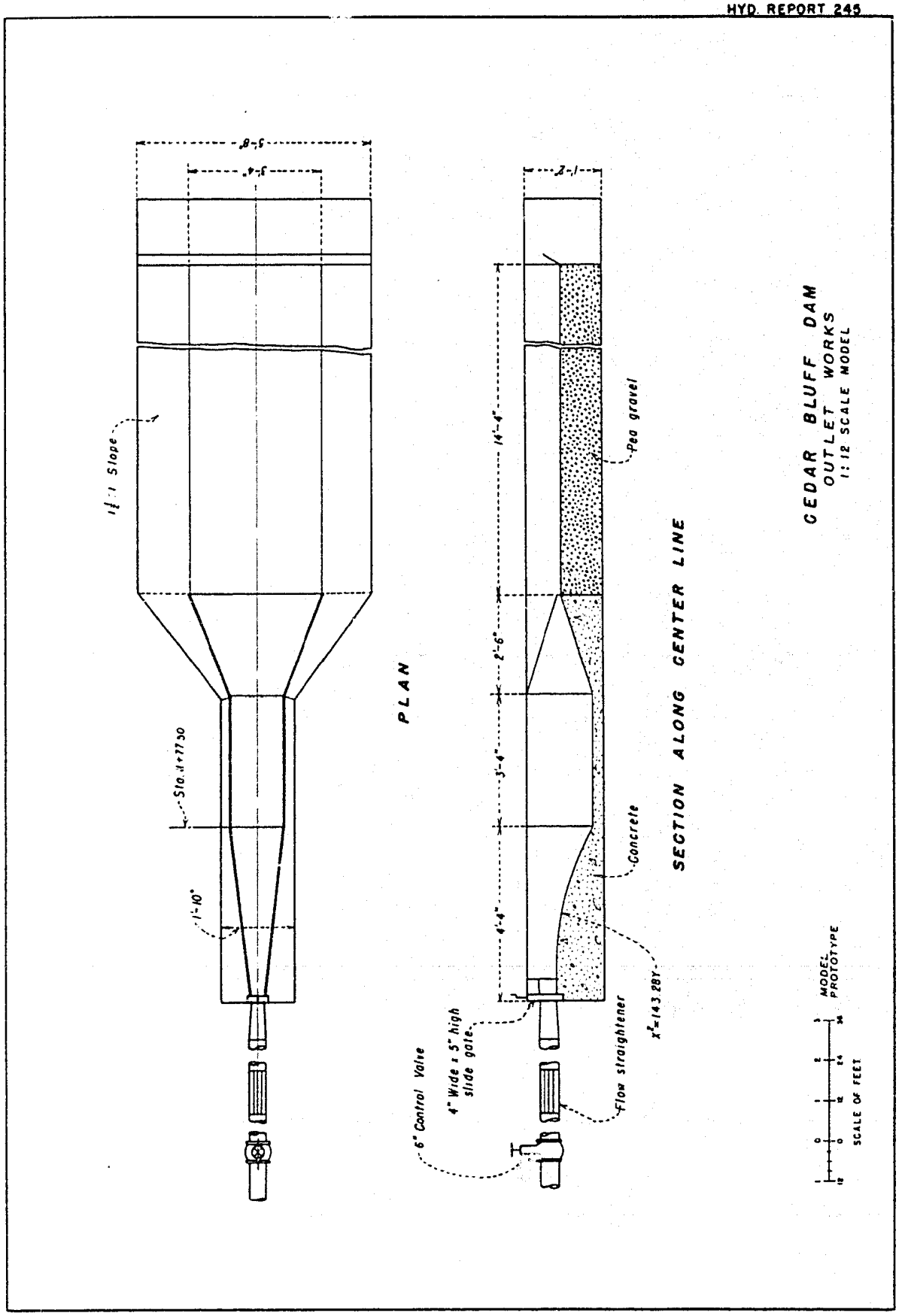

A. Standard gate.

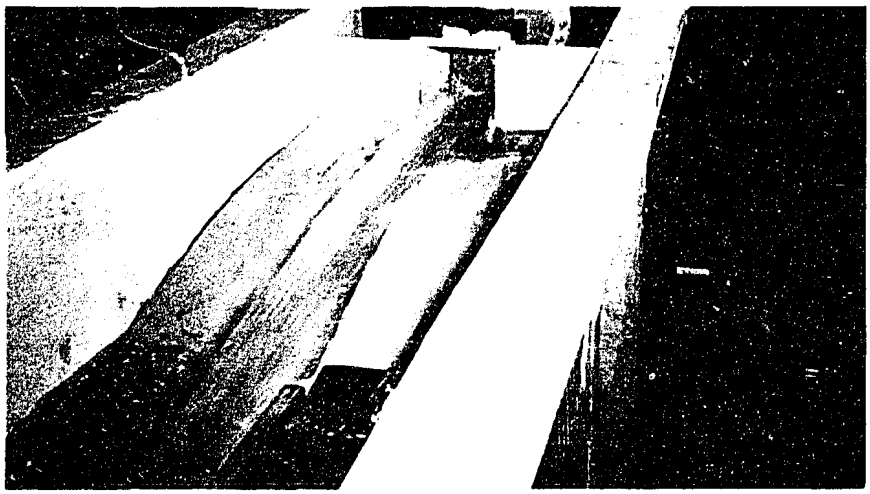

B. Standard gate with level floor.

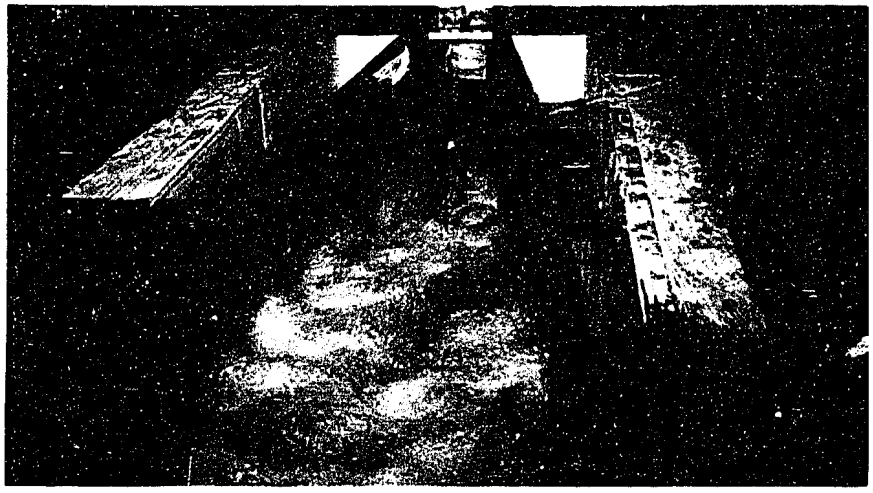

C. Modified gate with flat leaf.

Effect of gate design on flow distribution--
gate 23% open, 80 foot head, and 200 cfs discharge
CEDAR BLUFF OUTLET WORKS
1:12 Scale Model

Fig. 5
Hyd. 245

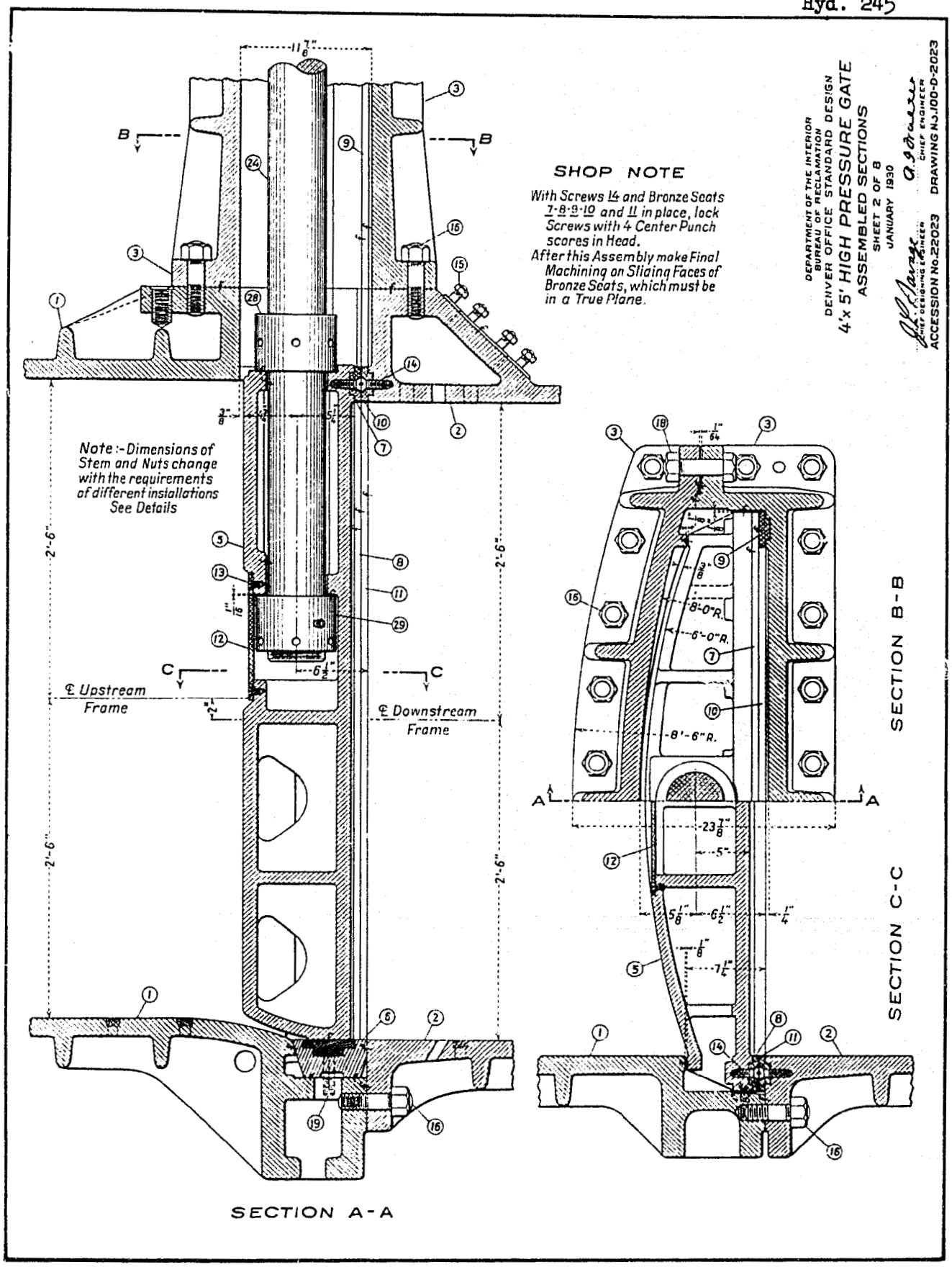
SHOP NOTE
With Screws 14 and Bronze Seats 7·8·9·10 and 11 in place, lock Screws with 4 Center Punch scores in Head.
After this Assembly make Final Machining on Sliding Faces of Bronze Seats, which must be in a True Plane.
Note :- Dimensions of Stem and Nuts change with the requirements of different installations See Details
℄ Upstream Frame
℄ Downstream Frame
SECTION A-A
SECTION B-B
SECTION C-C
DEPARTMENT OF THE INTERIOR
BUREAU OF RECLAMATION
DENVER OFFICE STANDARD DESIGN
4'x 5' HIGH PRESSURE GATE
ASSEMBLED SECTIONS
SHEET 2 OF 8
JANUARY 1930
CHIEF DESIGNING ENGINEER
CHIEF ENGINEER
ACCESSION No. 22023
DRAWING NJ.100-D-2023
REV. 5-10-35, 9-25-35, 11-14-42

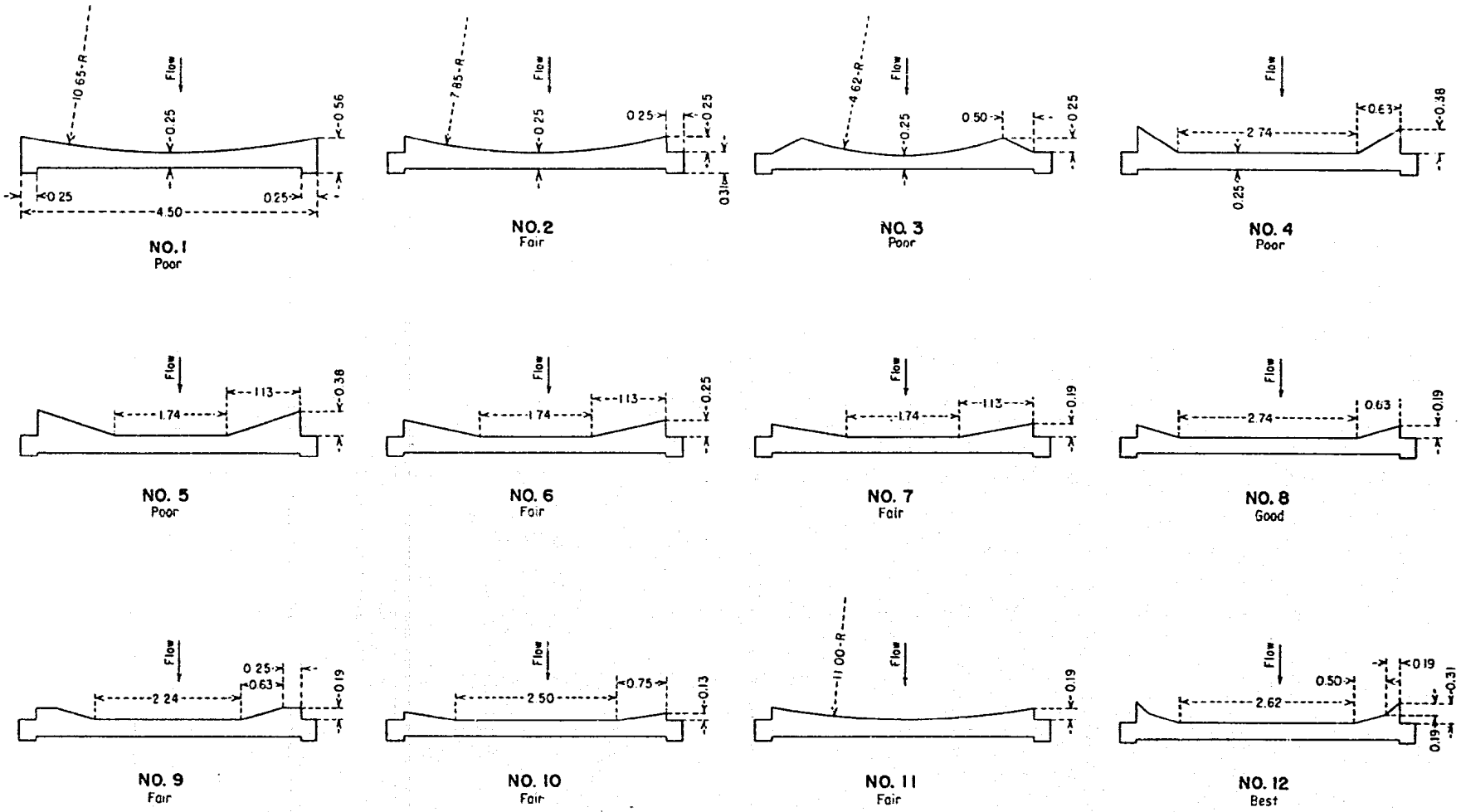

The above notes refer to the nature of the discharge produced by the leaf design

CEDAR BLUFF DAM

OUTLET WORKS

CONCAVE LEAF DESIGNS

1:12 SCALE MODEL

FIGURE 6
HYD. REPORT 245

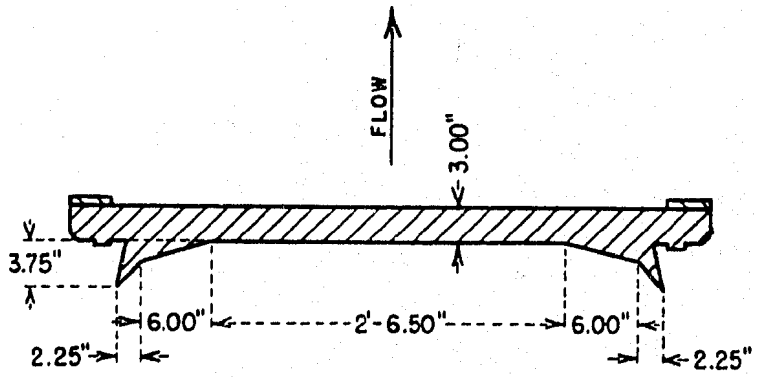

SECTION A-A

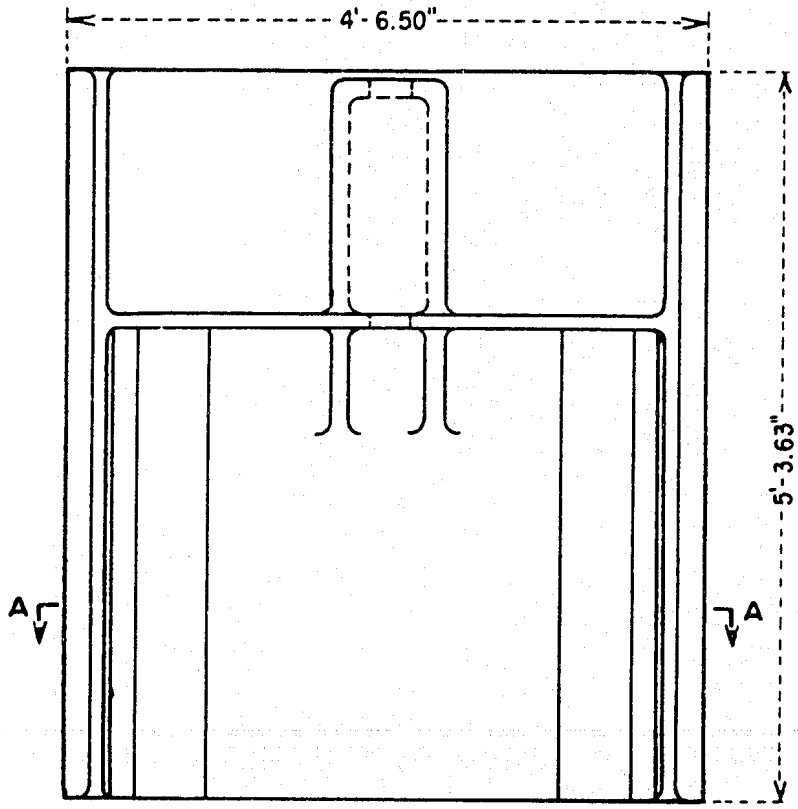

CEDAR BLUFF DAM
OUTLET WORKS
CONCAVE GATE LEAF – DESIGN 12
1:12 SCALE MODEL

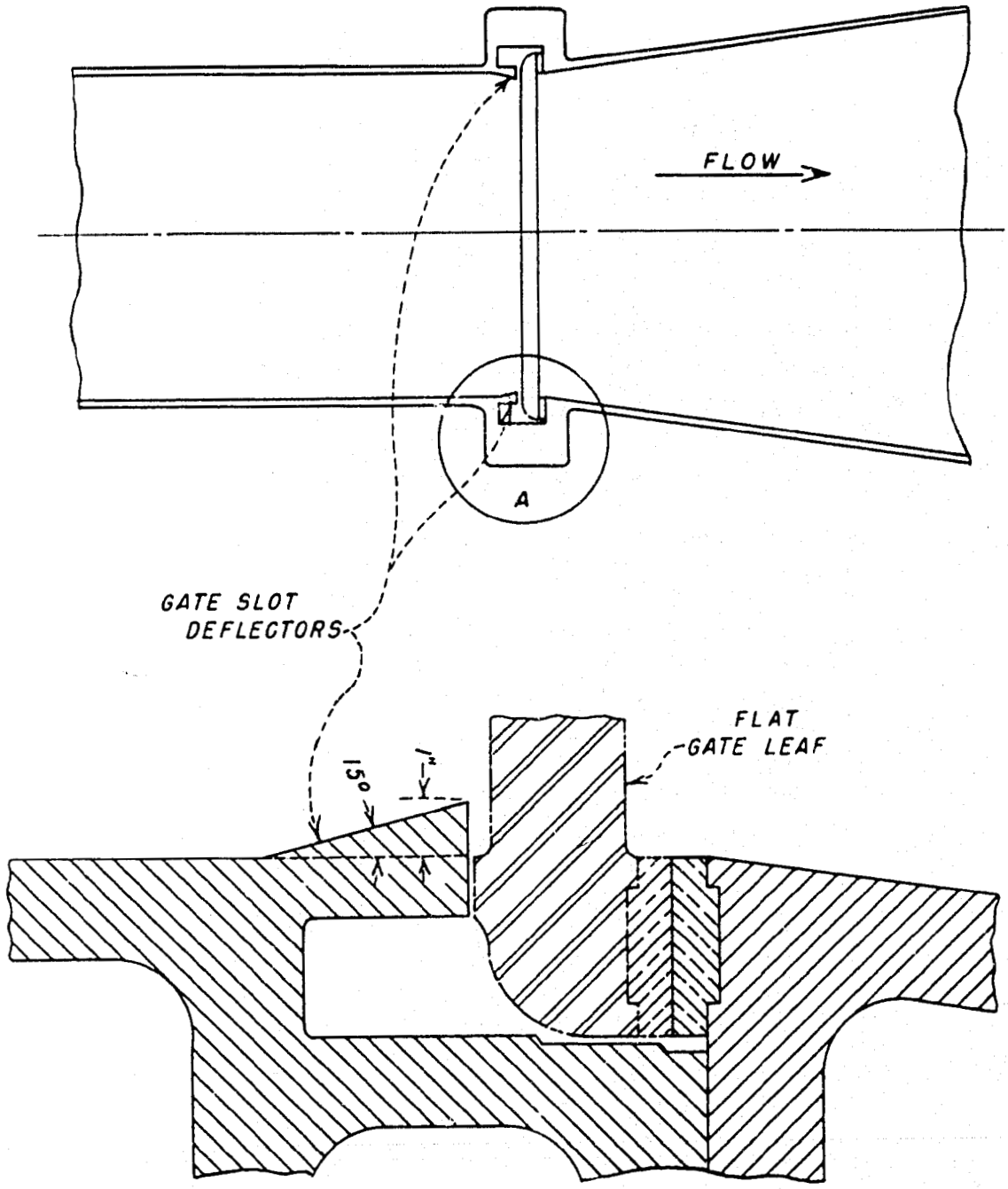

DETAIL A

CEDAR BLUFF DAM
OUTLET WORKS
GATE SLOT DEFLECTORS
1:12 SCALE MODEL

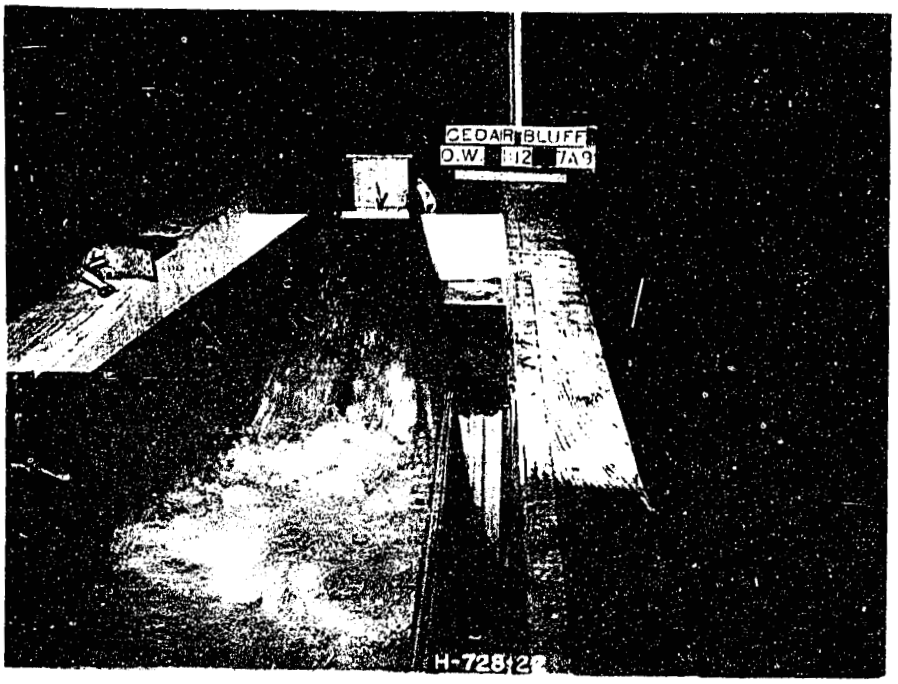

A. Wide open. Q = 785 cfs.

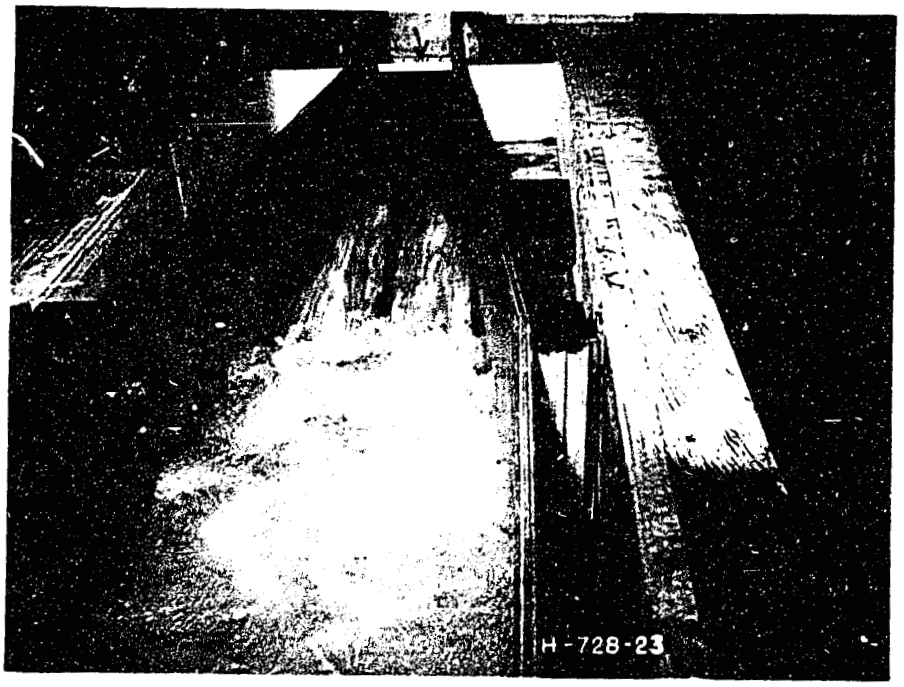

B. 5% closed. Q = 760 cfs.

Modified gate with flat leaf--operating in wide-open and 5% closed positions.
CEDAR BLUFF OUTLET WORKS
1:12 Scale Model

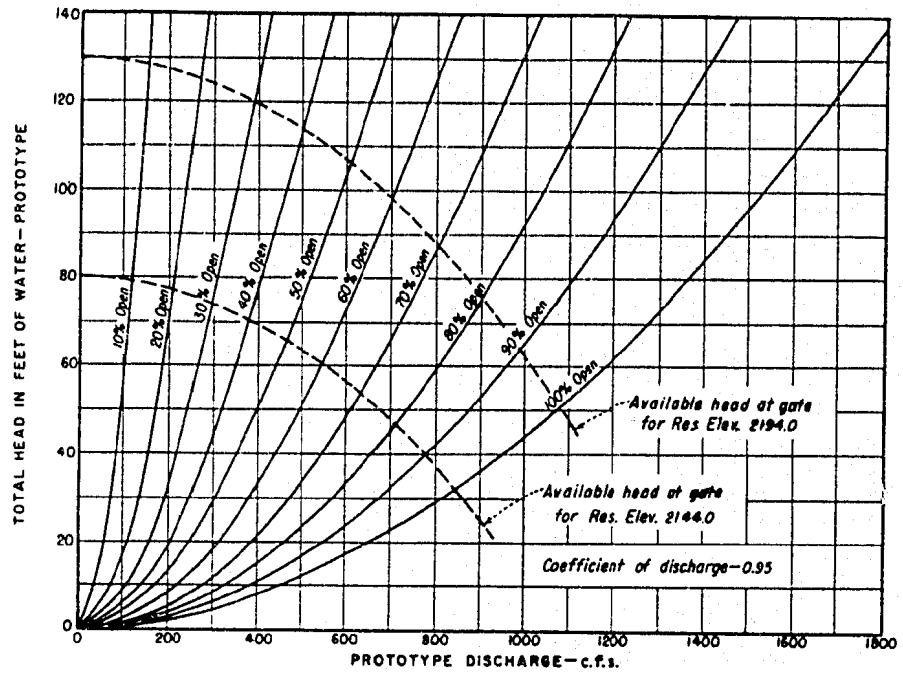

A. STANDARD DESIGN

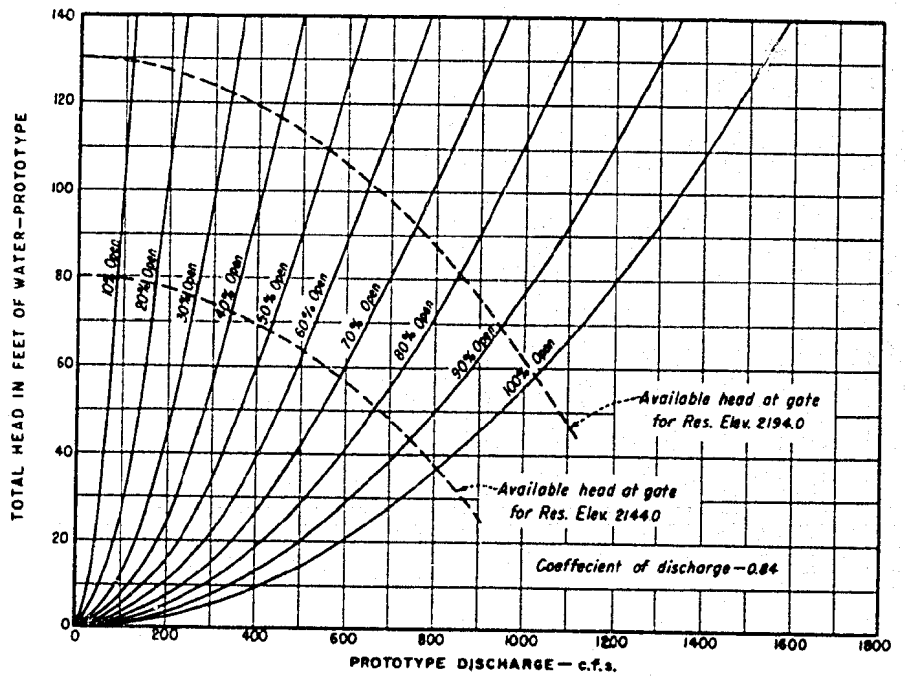

B. MODIFIED DESIGN WITH NARROW GATE SLOTS, SLOT DEFLECTORS, AND EITHER FLAT OR CONCAVE LEAF

NOTE: Coefficient of discharge is based on the total head at the gate center-line, area of the conduit at the gate entrance and the gate 100% open

CEDAR BLUFF DAM
OUTLET WORKS
4'-0" x 5'-0" HIGH PRESSURE SLIDE GATE
DISCHARGE CAPACITY CURVES
STANDARD DESIGN—MODIFIED DESIGN WITH EITHER FLAT OR CONCAVE LEAF

FIGURE 11
HYD. REPORT 245

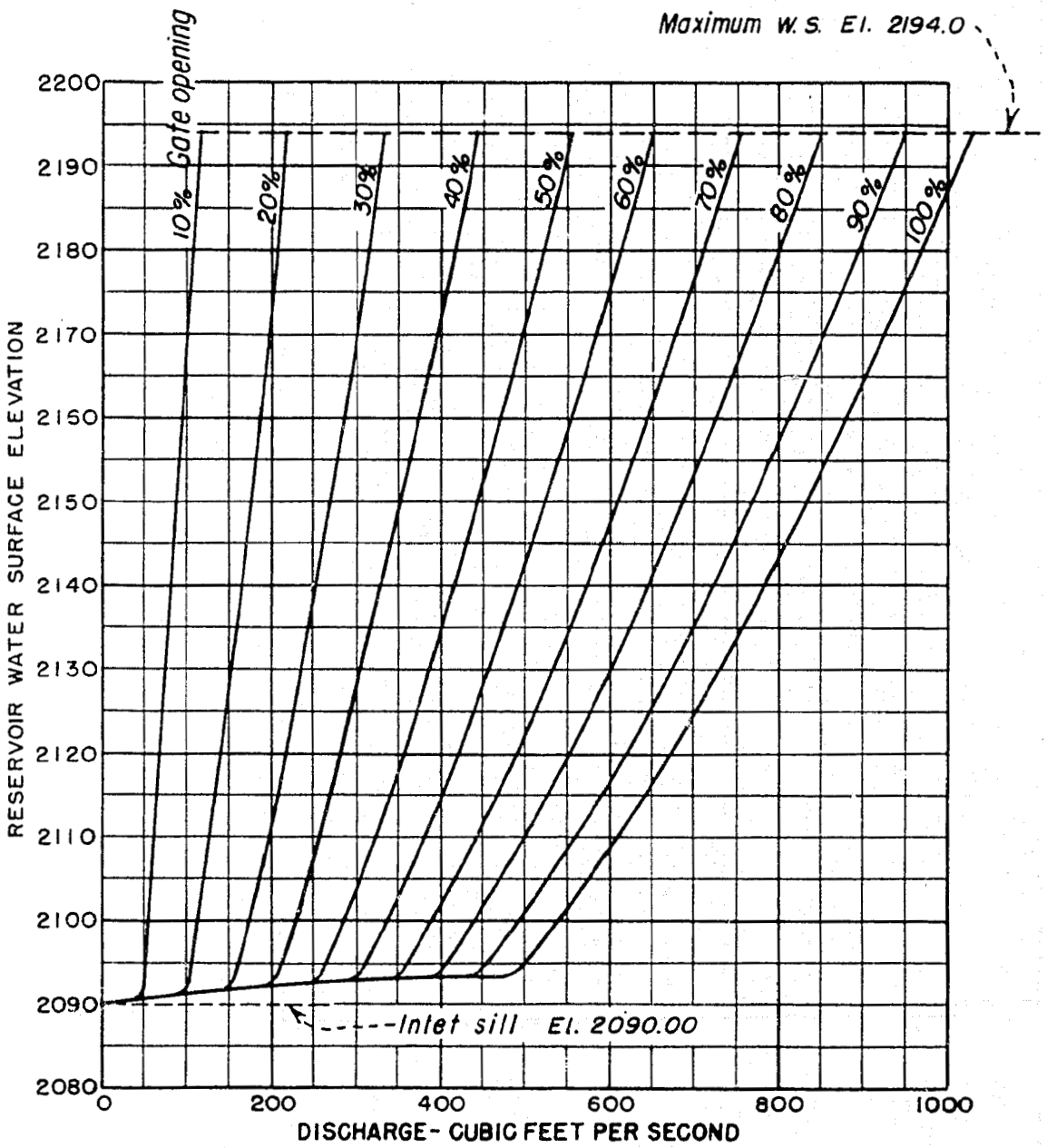

NOTE

Any variations in discharge from these curves as determined by measurements of flow downstream from the outlet works should be reported to the Chief Engineer

Regulating gate - 4'-0" x 5'-0" High pressure slide gate

UNITED STATES
DEPARTMENT OF THE INTERIOR
BUREAU OF RECLAMATION
MISSOURI RIVER BASIN PROJECT
CEDAR BLUFF UNIT - SMOKY HILL DIV.

CEDAR BLUFF DAM

OUTLET WORKS
DISCHARGE CURVES

DRAWN E.G.R. SUBMITTED
TRACED C.E.M. RECOMMENDED
CHECKED APPROVED
CHIEF DESIGN ENGR.

DENVER, COLO., JULY 20, 1950 | 372-D-228

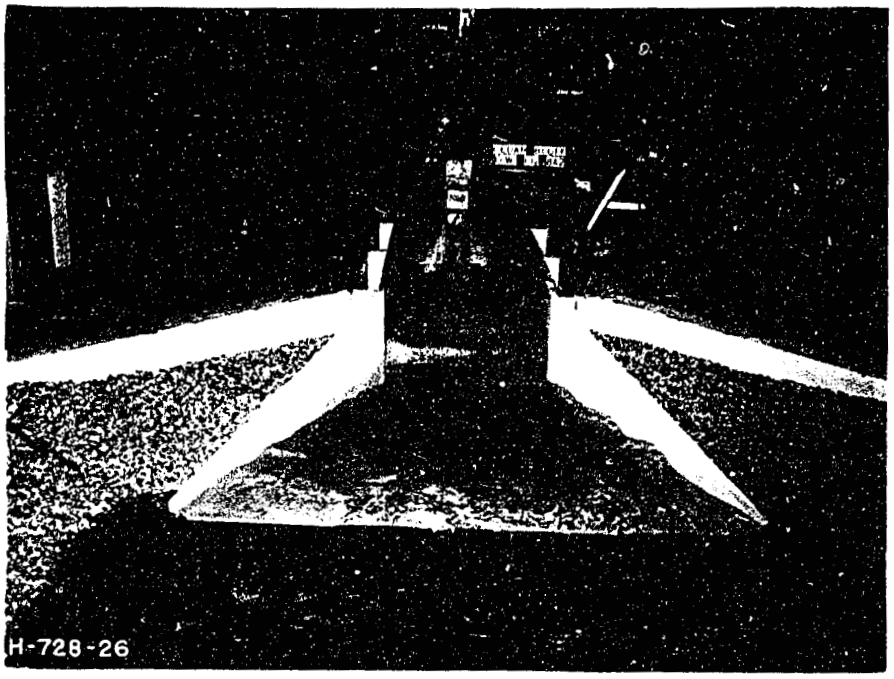

A. Modified gate with flat leaf discharging 200 cfs into stilling basin at a head of 80 feet.

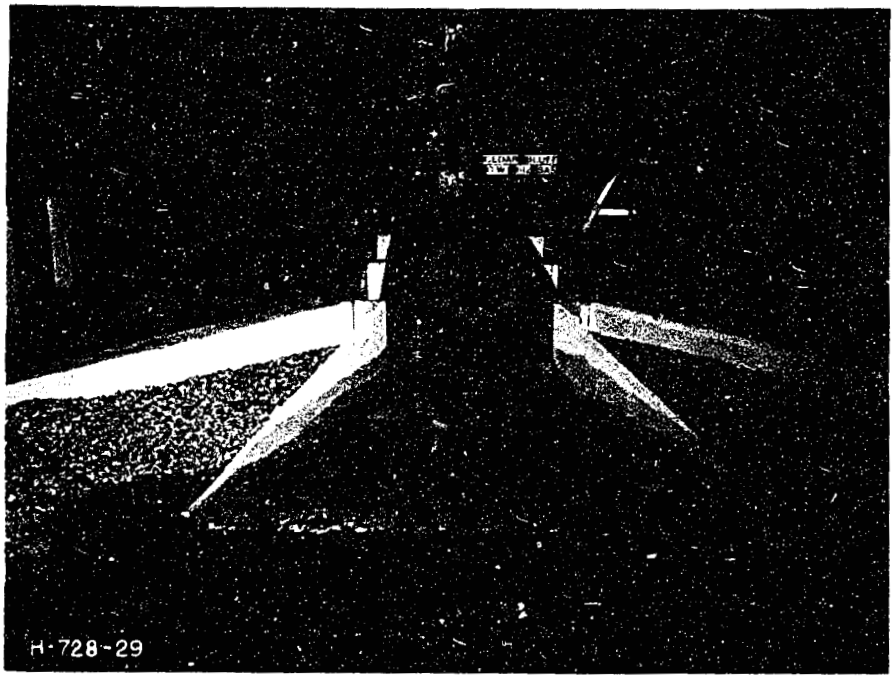

B. Modified gate with flat leaf discharging 760 cfs into stilling basin at a head of 80 feet.

Flow conditions in the stilling basin.
CEDAR BLUFF OUTLET WORKS
1:12 Scale Model

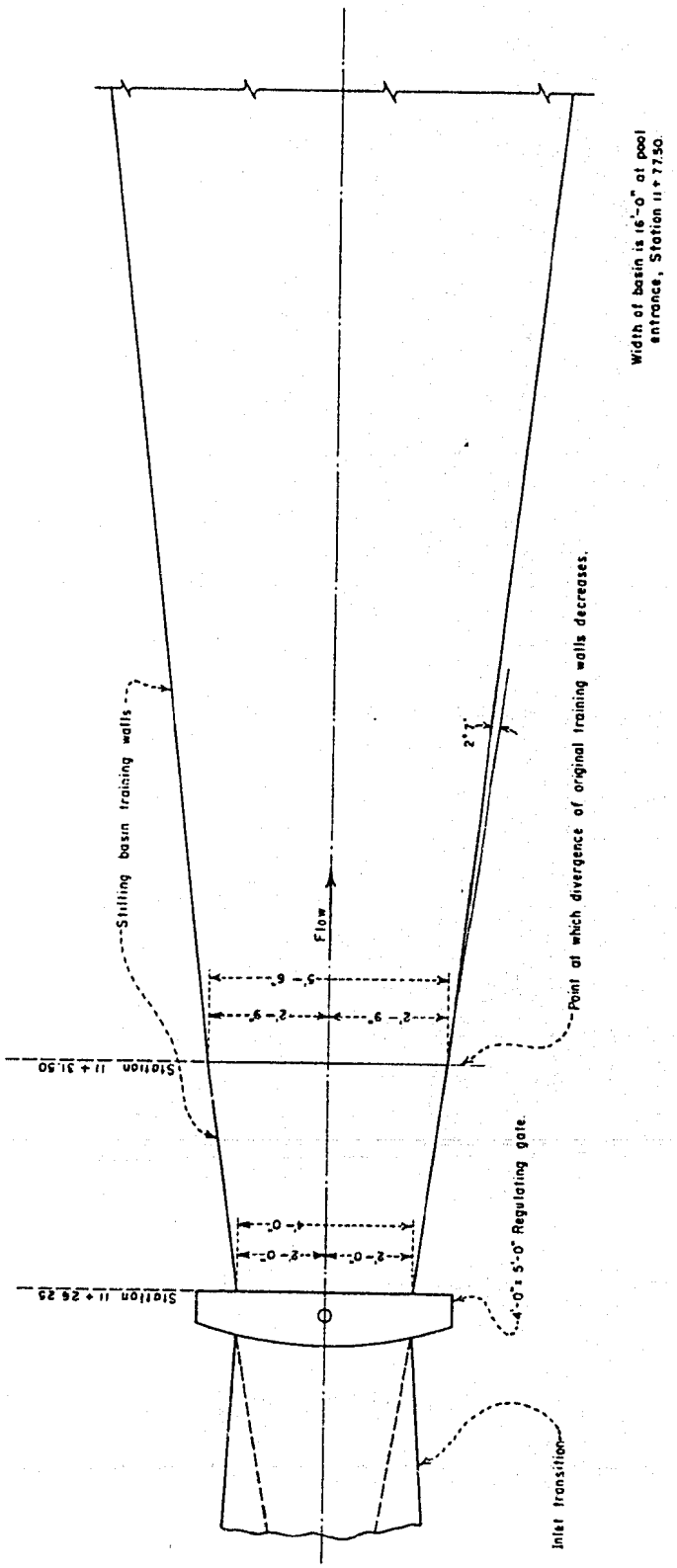

PLAN VIEW

CEDAR BLUFF DAM

OUTLET WORKS

ALIGNMENT OF THE STILLING BASIN TRAINING WALLS – ORIGINAL DESIGN

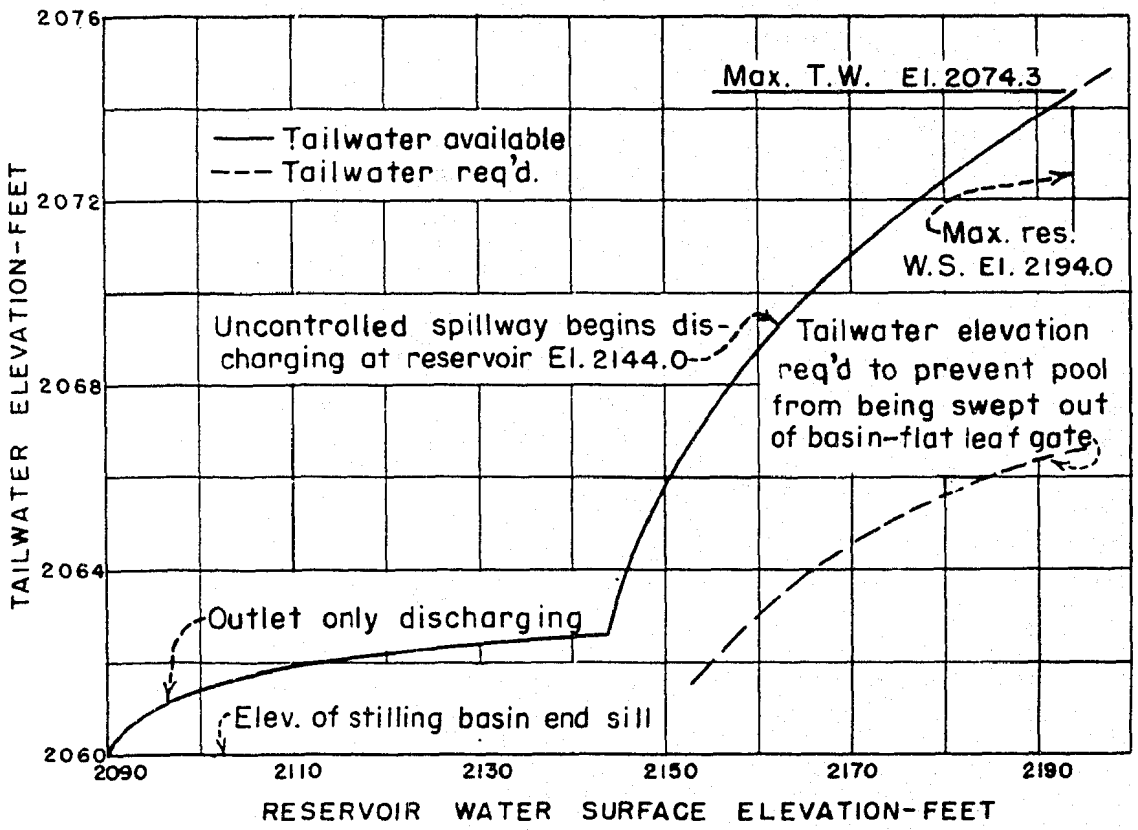

NOTES

Head on outlet works slide-gate is 80' when the resevoir elevation = 2144.0 (normal reservoir elevation).

The pool will not be swept out of the basin at any possible combination of head and discharge.

CEDAR BLUFF DAM

OUTLET WORKS

TAILWATER ELEVATION REQUIRED TO PREVENT SWEEPING POOL OUT OF STILLING BASIN, AND AMOUNT OF TAILWATER AVAILABLE

1:12 SCALE MODEL

Interior - Reclamation - Denver, Colo.