RECLAMATION

Managing Water in the West

San Luis Drainage Feature Re-evaluation

Appendix A
Feasibility Design Appendix

U.S. Department of the Interior
Bureau of Reclamation
Mid-Pacific Region
Sacramento, California

November 2007

Mission Statements

The mission of the Department of the Interior is to protect and provide access to our Nation's natural and cultural heritage and honor our trust responsibilities to Indian Tribes and our commitments to island communities.

The mission of the Bureau of Reclamation is to manage, develop, and protect water and related resources in an environmentally and economically sound manner in the interest of the American public.

Feasibility Design Appendix

BUREAU OF RECLAMATION
Technical Service Center, Denver, Colorado

San Luis Drainage Feature Re-evaluation Feasibility Design Appendix

Drainage Feature Re-evaluation Feasibility Study
Central Valley Project, California
Mid-Pacific Region

Scott R. Irvine P.E. — August 31, 2007

Prepared: Scott Irvine, P.E. — Date

Team Leader, Water Treatment Engineering & Research Group, 86-68230

Jack L. Delp P.E. — Sept. 04, 2007

Peer Review: Jack L. Delp, P.E. — Date

REVISIONS			
Date	Description	Team Leader	Peer Review

Contents

	Page
Drainage Service Alternatives – Feasibility Evaluation	1
Introduction	1
In-Valley/Drainage-Impaired Area Land Retirement Alternative	3
In-Valley/Water Needs Land Retirement Alternative	3
Proposed Facilities	4
Cost Estimates	6
Implementation Schedules	8
Appropriation Ceiling	8
Proposed Facilities for the Northerly Area	13
Drainwater Quantity	13
Flows from Existing Tile-Drained Farmland	14
Flows from Future Tile-Drained Farmland	15
Flows Intercepted from Existing Sumps along the DMC	16
Total Northerly Area Inflows to Federal Drainage Service System	16
Design Flow Volumes and Rates for Drainage Service	17
Drainwater Quality	18
Drainage Collection System	21
Non-Federal Components	21
Proposed Federal Components	22
Drainage Collector Pipelines	22
Delta-Mendota Canal Sump Intercept System	24
Drainage Reuse Facilities	25
Existing Reuse Facilities	25
Proposed Reuse Facilities	26
Reuse Locations	26
Soil Investigations of the Reuse Area	27
Reuse of RO Treatment Plant Backwash	37
Reuse Irrigation and Canal-Side Pumping Plants Design Summary	40
Reuse Drainage System Design Summary	49
Conveyance System	52
Reuse Drainage Pumping Plants Design Summary	52
Communications	58
SCADA Systems	60
Flow Meters	60
Sump Pumps	61
Pipelines and Regulating Tanks	61
Reverse Osmosis Treatment Plant	62
Pilot Plant Testing	63

Page

Alternative Process Testing 65
Future Testing 65
Expected Feedwater Quality 66
Reverse Osmosis Plant Design 66
Inlet/Regulating Tanks 66
Pretreatment 69
Cartridge Filters 71
Siting of Equipment and Materials 71
Instrumentation and Control 71
High-Pressure Pumps 72
Reverse Osmosis Skids 73
Product Water 79
Concentrate Disposal 80
Cost Estimates 80
Procurement and Construction 81
Selenium Biotreatment Plant 81
General Description 81
Unit Process Sizing 83
Structural Considerations and Construction Materials 94
Administration Building; Heating, Ventilating, and Air Conditioning; Water and Sewer 102
Electrical Systems, Instrumentation and Controls 106
Disposal of Selenium Concentrate 107
Evaporation Ponds 109
Number of Evaporation Pond Facilities 109
Selection of Pond Location 110
Evaporation Pond Water Management and Cell Layout 111
Evaporation Process Design 112
Cell Wall and Interceptor Trench Design 119
Other Vertical Wall Construction Options Considered 122
Embankment Gate Structure 124
Cell Liner Design Criteria and Regulatory Requirements 125
Surface Water Concerns 131
Environmental Mitigation Facilities 131
Mitigation Planning 131
Environmental Impacts and Estimates of Mitigation Requirements 132
Selection of Potential Mitigation Sites 135
Mitigation Habitat Designs and Cost Estimates 135

Proposed Facilities for Westlands 143
Drainwater Quantity 143
Phased Implementation of Drainwater Services 144
Westlands Drainage Service System Capacity 145
Drainwater Quality 146

Page

Drainage Collection System 148
Selection of Retired Lands 148
Existing Facilities 148
Collection System Design 149
Drainage Reuse Facilities 151
Reuse Locations 151
Soil Investigations of the Reuse Area 151
Drainwater Inflow to Reuse Areas 153
Annual Reuse Crop Irrigation Estimates 153
Reuse Irrigation 154
Reuse Subsurface Drainage 156
Conveyance System 159
Westlands Reuse Drainage Pumping Plants Design Summary 159
Communications 165
SCADA Systems 168
Flowmeters 169
Pipelines and Regulating Tanks 170
Reverse Osmosis Treatment Plants 171
Expected Feedwater Quality 171
Reverse Osmosis Skids 171
RO Product Water Disposition 180
RO Concentrate Disposition 180
Cost Estimates 180
Procurement and Construction 180
Selenium Biotreatment Plants 180
General Description of Biotreatment Process 182
Plant Design Summary 185
Evaporation Ponds 185
Number and Location of Evaporation Pond Facilities 185
Solids Generation Quantities and Disposal 187
Evaporation Process Design and Cell Sizing 188
Environmental Mitigation Facilities 188
Mitigation Land Areas – Initial Estimates and Contingency Allowances 188
Selection of Potential Mitigation Sites 190

Attachments

Attachment 1 Feasibility Design Appendix Drawings
Attachment 2 Lands and Rights ..... Attachment 2-1
Attachment 3 Project and Construction Cost Estimates ..... Attachment 3-1
Attachment 4 Implementation Schedules ..... Attachment 4-1

Tables

		Page
Table 1	Area needing drainage service	1
Table 2	Feasibility level cost construction estimates for the In-Valley/Drainage-Impaired Area Land Retirement Alternative	7
Table 3.	Feasibility level cost construction estimates for the In-Valley/Water Needs Land Retirement Alternative	7
Table 4	Available funding ceiling for the San Luis Unit	12
Table 5	Northerly Area drainage flow volume estimates	17
Table 6	Existing and proposed expansion areas for Northerly Area reuse facilities	27
Table 7	Reuse areas soil productivity grades	28
Table 8	Hydraulic conductivity test summary for general soil types	29
Table 9	Ditch contribution to Station A flow	31
Table 10	Flows in Russell Avenue, FC5 and PO2 ditches	32
Table 11	Irrigation design parameters for Section 9, between Eagle Field and Russell Avenue—620 acres	32
Table 12	Reuse tile drain spacings, sumps, and estimated drainage discharge flows	36
Table 13	Model summary of reuse inflow, volume reduction, and outflow	37
Table 14	Pump and pipeline design parameters for Northerly Area reuse irrigation system	42
Table 15	Pump and pipeline design parameters for Northerly Area conveyance system	53
Table 16	Composition of RO feed and reject streams	67
Table 17	Summary of design of RO treatment plant	68
Table 18	Projections of RO feedwater, concentrate, and product water streams	74
Table 19	Preliminary design of RO skids	76
Table 20	Values substituted to obtain ion balance	81
Table 21	Bioreactor design flows	87
Table 22	Biotreatment sizing summary	91
Table 23	Biotreatment solids production estimates	108
Table 24	Net evaporation rates for area weather sites in inches	108
Table 25	Average climatic data collected near Five Points, California	116
Table 26	Evaporation cell sizes and salinities	118
Table 27	Mitigation planning components	133
Table 28	Initial estimates and contingency allowance of mitigation land areas for the Northerly Area	135
Table 29	Westlands drained acres[1] and drainwater flow estimates	145
Table 30	Proposed reuse areas for Westlands	152
Table 31	Westlands reuse areas soil productivity grades	152

Page

Table 32 Estimated irrigation demands and drainage rates for Westlands reuse areas 154
Table 33 Transient-state drain spacing for Reuse Area A 156
Table 34 Soil permeability, depth to barrier, and drain spacings 157
Table 35 Estimated quantities required of drain tile, collector lines, and manholes 158
Table 36 Composition of feed and reject streams 172
Table 37 Projections of RO feedwater, concentrate, and product water streams 172
Table 38 Preliminary design of RO skids 177
Table 39 Summary of design of RO plants—Westlands 181
Table 40 Westlands Bioreactor Plant Sizes[1] 184
Table 41 Biotreatment Design Summary 186
Table 42 Biotreatment solids production estimates 187
Table 43 Evaporation cell sizes and salinities for the three Westlands areas 189

Figures

Figure 1 Westlands Water District and Northerly Area lands in in the drainage study area 2
Figure 2 In-Valley/Drainage-Impaired Area Land Retirement Alternative features ..... follows page 4
Figure 3 In-Valley/Water Needs Land Retirement Alternative features ..... follows page 4
Figure 4 Proposed drainage service features for both feasibility alternatives 5
Figure 5 Implementation schedule for the Drainage-Impaired Alternative 9
Figure 6 Implementation schedule for the Water Needs Land Retirement Alternative 10
Figure 7 Annual flow volumes measured at Station A 15
Figure 8 Combined annual DMC sump flows, 1988–2004 16
Figure 9 Northerly Area drainage service system—average annual flow volumes 19
Figure 10 Northerly Area drainage service capacity – nominal maximum annual flow volumes 20
Figure 11 Flow schematic of drainage service in the Northerly Area ..... follows page 20
Figure 12 Proposed drainage collection system and reuse facilities in the Northerly Area ..... follows page 22
Figure 13 Average Station A flow pattern and crop ET pattern from 1996–2004 33

Figure 14 Estimated reuse bypass flows to treatment for years 2003–2004 modeling scenario 34
Figure 15 Reuse water table height above drains modeled for Section 1, west of Eagle Field..... 38
Figure 16 Reuse water table height above drains modeled for Section 9, east of Eagle Field..... 38
Figure 17 Design of the 80-acre reuse cell for RO backwash disposal 39
Figure 18 Reuse and backwash tile drain discharges to WCC06D pumping plant for 2003–2004 modeling scenario 51
Figure 19 Existing and proposed reuse areas, including conveyance facilities in the Northerly Area ..... follows page 52
Figure 20 Process diagram of the Northerly Area RO plant 67
Figure 21 Fraction of feed flow from reuse areas 69
Figure 22 Suspended solids in bypass flow by day of year..... 70
Figure 23 Line diagram of pretreatment for the Northerly Area..... 70
Figure 24 Reverse osmosis plant instrumentation..... 72
Figure 25 Expected RO feedwater temperature and relative productivity 76
Figure 26 Northerly Area feedwater supply and RO treatment capacity (average year) 77
Figure 27 Northerly Area feedwater supply and RO plant capacity (wet years) 78
Figure 28 Conductance of bypass flow by day of year 79
Figure 29 Flow path and cell operation during normal operation..... 113
Figure 30 Flow path and cell operation during low flow operation..... 113
Figure 31 Average monthly inflows to evaporation ponds 116
Figure 32 Cross section of composite sheet pile wall construction..... 119
Figure 33 Cross section of slurry wall construction: cement-bentonite (CB) or soil-cement-bentonite (SCB) 119
Figure 34 Option 3—Reinforced concrete retaining wall 122
Figure 35 Option 4—Stacked gabions 123
Figure 36 Option 5—Slip-formed curb, evaporation pond concrete retaining wall..... 123
Figure 37 Flow of brine through gate structure..... 124
Figure 38 Plan view of gate structure..... 125
Figure 39 Hydralic conductivity testing results (field and lab)—site permeability..... 127
Figure 40 SEEPW output of steady state flow local to embankment wall..... 129
Figure 41 SEEPW output showing seepage from a cell without a liner 129
Figure 42 Seepage at steady state from a clay-lined cell 130

Page

Figure 43 Evaporation pond salt loss versus seepage collection rate..... 130
Figure 44 Aerial view of proposed locations for Northerly Area Alternative habitat..... 136
Figure 45 In-Valley/Water Needs Land Retirement Alternative features in Westlands North..... follows page 144
Figure 46 In-Valley/Water Needs Land Retirement Alternative features In Westlands Central ..... follows page 144
Figure 47 In-Valley/Water Needs Land Retirement Alternative features in Westlands South..... follows page 144
Figure 48 Nominal flow capacities of the various features in the Westlands Westlands drainage service system 147
Figure 49 Flow schematic of drainage service in Westlands..... follows page 146
Figure 50 Estimated drainwater discharges from Reuse Area A 158
Figure 51 Expected RO feedwater temperature and relative productivity 176
Figure 52 North Westlands feed supply and plant intake capacity 178
Figure 53 Central Westlands feed supply and plant intake capacity 179
Figure 54 South Westlands feed supply and plant intake capacity 179
Figure 55 Average monthly inflows to evaporation ponds 189
Figure 56 Location of Proposed AH Mitigation Facilities in Westlands North..... 191
Figure 57 Location of Proposed AH Mitigation Facilities in Westlands Central 192
Figure 58 Location of Proposed AH Mitigation Facilities in Westlands South..... 193

Abbreviations and Acronyms

A	ampere
ACH	air changes per hour
acre-ft	acre-feet
AH	alternative habitat
AH-S	shallow water alternative habitat
ASME	American Society of Mechanical Engineers
ASTM	American Society for Testing and Materials
AWG	American Wire Gauge
CCID	Central California Irrigation District
DFG	California Department of Fish and Game
cfm	cubic feet per minute
cfs	cubic feet per second
CH	compensation habitat
CH-D	deep water compensation habitat
CH-S	shallow water compensation habitat
CIMIS	California Irrigation Management Information System
cm	centimeter
DEC	Design, Cost Estimating, and Construction
DMC	Delta-Mendota Canal
DOS-IR	drain or sub-irrigation riser
EBCT	empty bed contact time
EIS	environmental impact statement
EPDM	gasketing for cover panel joints
ET	evapotranspiration
FCV	flow control valve
FRP	fiberglass reinforced plastic
ft	feet
ft^2	square feet
ft^3	cubic feet
FY	fiscal year
gal	gallons
gpm	gallons per minute
H_2S	hydrogen sulfide
HDPE	high density polyethylene
HRT	hydraulic retention time
HVAC	heating, ventilating, and air conditioning
in/day	inches per day

in/hr	inches per hour
kcmil	thousand circular mil
kV	kilovolt
kVA	kilovolt-ampere
kWh/yr	kilowatthours per year
m	meter
MCC	motor control center
mg/L	milligrams per liter
mgpd	million gallons per day
mph	miles per hour
NF	nanofiltration
O&M	operation and maintenance
ORP	oxidation reduction probe
PFR	Plan Formulation Report
PLC	programmable logic controller
ppm	parts per million
psi	pounds per square inch
psig	pounds per square inch gauge
PVC	polyvinyl chloride
Reclamation	Bureau of Reclamation
RO	reverse osmosis
RRR	Red Rock Ranch
RTU	remote terminal unit
RWQCB	Regional Water Quality Control Board
S	reduced sulfur
SCADA	supervisory control and data acquisition
Scfm/sf	air flow requirement for mixing
SDI	silt density index
Se	selenium
SJRIP	San Joaquin River Improvement Program
SLDFR	San Luis Drainage Feature Re-evaluation
SLR	surface loading rate
SWRCB	State Water Resources Control Board
TDS	total dissolved solids
TEFC	totally-enclosed fan-cooled
TLDD	Tulare Lake Drainage District
TPCA	Toxic Pits Control Act
TSS	total suspended solids
Westlands	Westlands Water District
XLPE	cross linked polyethylene
V	volt
VFDs	variable frequency drives
yr	year

µg/L	micrograms per liter
µS	microsiemens
%	percent
°C	degrees Celsius
°F	degrees Fahrenheit

Drainage Service Alternatives – Feasibility Evaluation

Introduction

Feasibility designs and cost estimates are presented for two drainage service alternatives:

- In-Valley/Drainage-Impaired Area Land Retirement Alternative
- In-Valley/Water Needs Land Retirement Alternative

The term "in-valley" indicates that drainage service features are constructed entirely within the geographic boundaries of the project area in the San Joaquin Valley. For this study, the drainage study area has been subdivided into two geographic areas: Westlands Water District (Westlands) (north, central, and south sections) and the Northerly Area. Refer to figure 1 for a map of the study area and table 1 for a description of the drainage-impaired areas that require drainage service.

Table 1. Area needing drainage service[1]

District	Area (acres)
Westlands North	102,000
Westlands Central	104,000
Westlands South	92,000
Subtotal (Westlands)[1]	298,000
Northern San Luis Unit Districts[2]	45,000
Northerly Area Outside of San Luis Unit	36,000
Subtotal (Northerly Area)	81,000
Total	**379,000**

Source: *San Luis Drainage Feature Re-evaluation Environmental Impact Statement*, Bureau of Reclamation, May 2006.

[1] The areas needing drainage service were revised for the *San Luis Drainage Feature Re-evaluation Plan Formulation Report*, Reclamation, December 2002 and Addendum, July 2004 (PFR) Addendum based on land retirement actions that occurred since the publication of the PFR in December 2002, but they are not revised for this environmental impact statement (EIS) because the baseline for existing conditions is 2001. The retired lands (44,106 acres) are included as part of the action alternatives (section 2.3.3).

[3] Based on projections in the EIS, Appendix C, table C1-3.

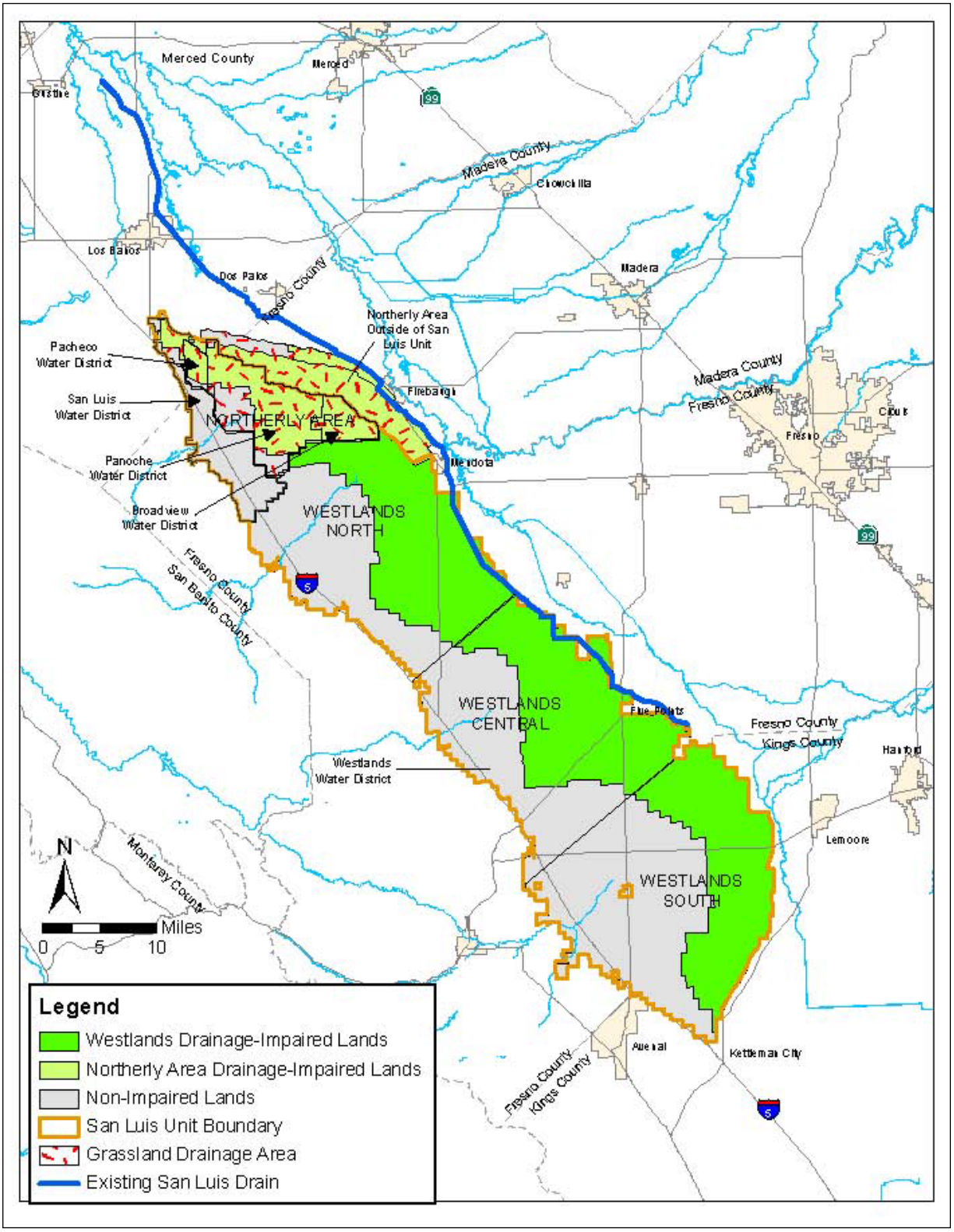

Figure 1. Westlands Water District and Northerly Area lands in the drainage study area.

The term "drainage-impaired" refers to lands that are not capable of sustaining commercial agricultural production without the installation of tile drains to collect and remove subsurface drainage and shallow groundwater from the root zone. Drainage-impaired lands arise from a combination of subsurface hydrogeologic properties that naturally impede the removal or drainage of shallow groundwater.

The term "land retirement" indicates that both alternatives incorporate retirement of farmland as a significant component of drainage service. The primary difference between the two alternatives is the amount of land that would be retired from irrigation and the amount of land for which drainage service features would be constructed.

In-Valley/Drainage-Impaired Area Land Retirement Alternative

A geographic depiction of the proposed retired lands and constructed drainage service features in both the Westlands area and the Northerly Area for the In-Valley/Drainage-Impaired Land Retirement Alternative is shown in figure 2.

Westlands

The In-Valley/Drainage-Impaired Area Land Retirement Alternative retires all drainage-impaired lands within Westlands— approximately 298,000 acres. Retired lands in Westlands would include 44,106 acres retired under a previous agreement plus 253,894 acres proposed under this alternative. Drainage service features would not be constructed for farms within the Westlands district under this alternative.

Northerly Area

This alternative includes retirement of 10,000 acres in the Broadview Water District in the Northerly Area. Drainage service features would be constructed for the remaining drainage-impaired lands in the Northerly Area—approximately 71,000 acres. This area includes and would incorporate existing infrastructure that currently provides drainage to approximately 48,000 acres in the Northerly Area districts.

In-Valley/Water Needs Land Retirement Alternative

A geographic depiction of the proposed retired lands and constructed drainage service features in both Westlands and the Northerly Area for the In-Valley/Water Needs Land Retirement Alternative is shown in figure 3.

Westlands

The In-Valley/Water Needs Land Retirement Alternative was developed because Westlands does not currently receive sufficient water supply to irrigate all of the farmland within its district. This alternative retires about 184,000 acres (44,106 previous acres plus 139,850 additional acres) of drainage-impaired lands within Westlands. Drainage service features would be constructed for the remainder of the drainage-impaired farmland in Westlands—about

114,000 acres—which would then have adequate water to meet irrigation demands based on the projected available water supply within the district.

Northerly Area

This alternative also includes retirement of 10,000 acres in the Broadview Water District and construction of drainage service features for approximately 71,000 acres of drainage-impaired lands in the Northerly Area. This area includes and would incorporate existing infrastructure that currently provides drainage to approximately 48,000 acres in the Northerly Area districts. Land retirement and drainage service construction for the Northerly Area portion of the project is identical under both of the feasibility alternatives.

Proposed Facilities

The proposed Federal drainage service features for both alternatives are depicted graphically in figure 4 and described below. Feasibility design drawings are provided in attachment 1.

- **Drainage Collection System**: A combination of existing open drainage ditches and proposed closed pressurized pipelines that collect and convey drainage from farmlands to regional reuse facilities.

- **Drainage Reuse Facilities**: Designated agricultural lands that utilize subsurface drainage collected from surrounding farmlands to irrigate salt tolerant crops. The purpose of reuse facilities is to reduce the volume of drainwater that requires further treatment and disposal at downstream facilities. The volume of drainwater is reduced through evapotranspiration (ET) of irrigated crops. Reuse facilities would be built and operated similar to commercial farmlands with irrigation, seeding, harvesting, tailwater recovery, and collection of reused drainwater from subsurface tile drains. Reused drainwater would be conveyed to reverse osmosis (RO) treatment plants.

  The Northerly Area reuse irrigation system would require several canal-side pumping plants to convey drainage from the existing open collector drains to the reuse fields. Westlands would have 11 reuse areas scattered across the district, which would receive irrigation supplies from the proposed gravity-flow collector pipelines.

- **Conveyance System**: A network of pumping plants and pipelines that convey drainwater collected from reuse facilities to RO treatment plants.

- **Reverse Osmosis Treatment**: Desalination treatment of drainwater conveyed from the reuse facilities using reverse osmosis membranes to recover approximately 50 percent (%) of drainage as desalted product water. The desalted product water would be available for reuse as an irrigation supply for commercial farmlands. The remaining 50% of the

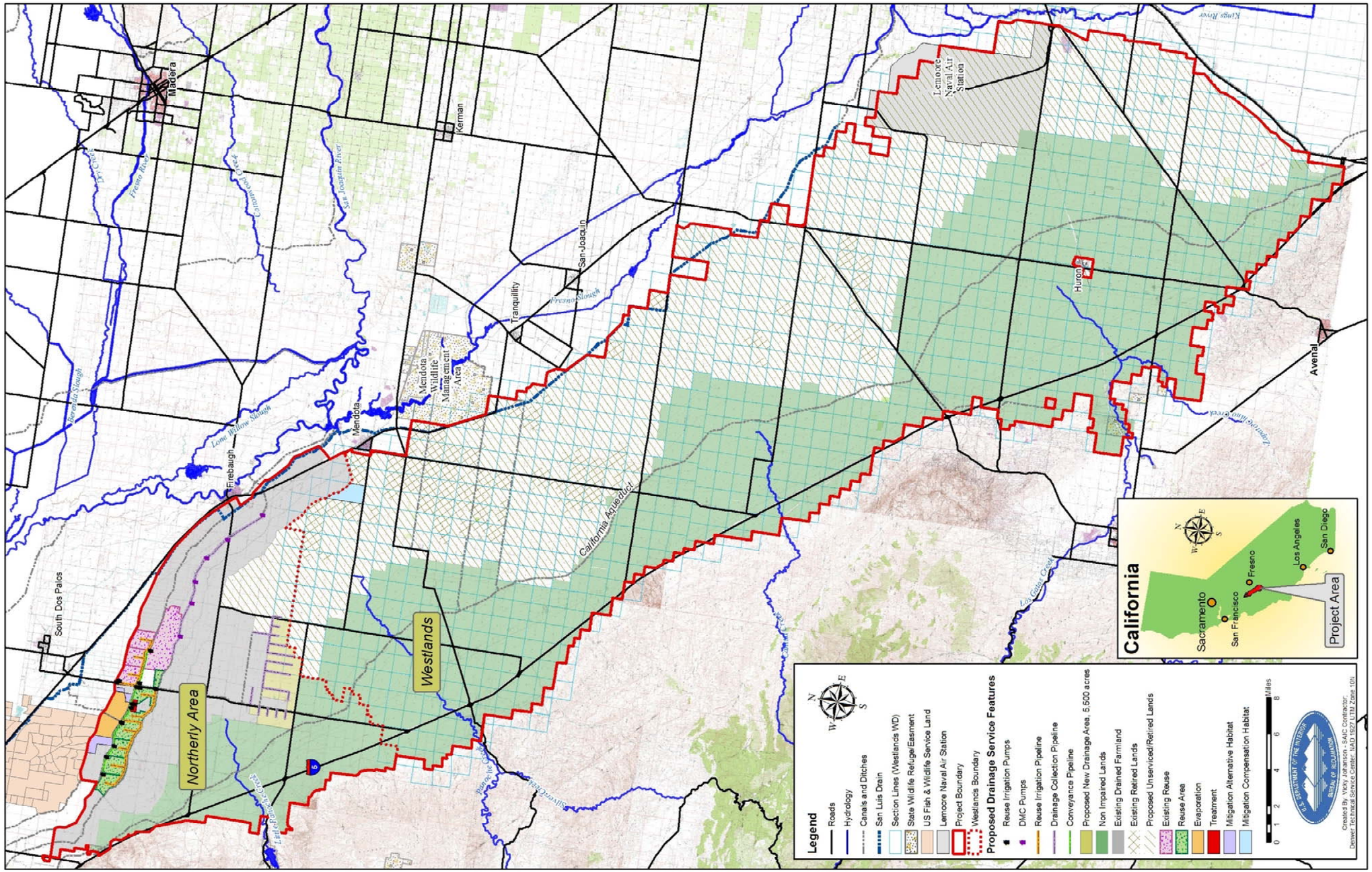

Figure 2. In-Valley/Drainage-Impaired Area Land Retirement Alternative features.

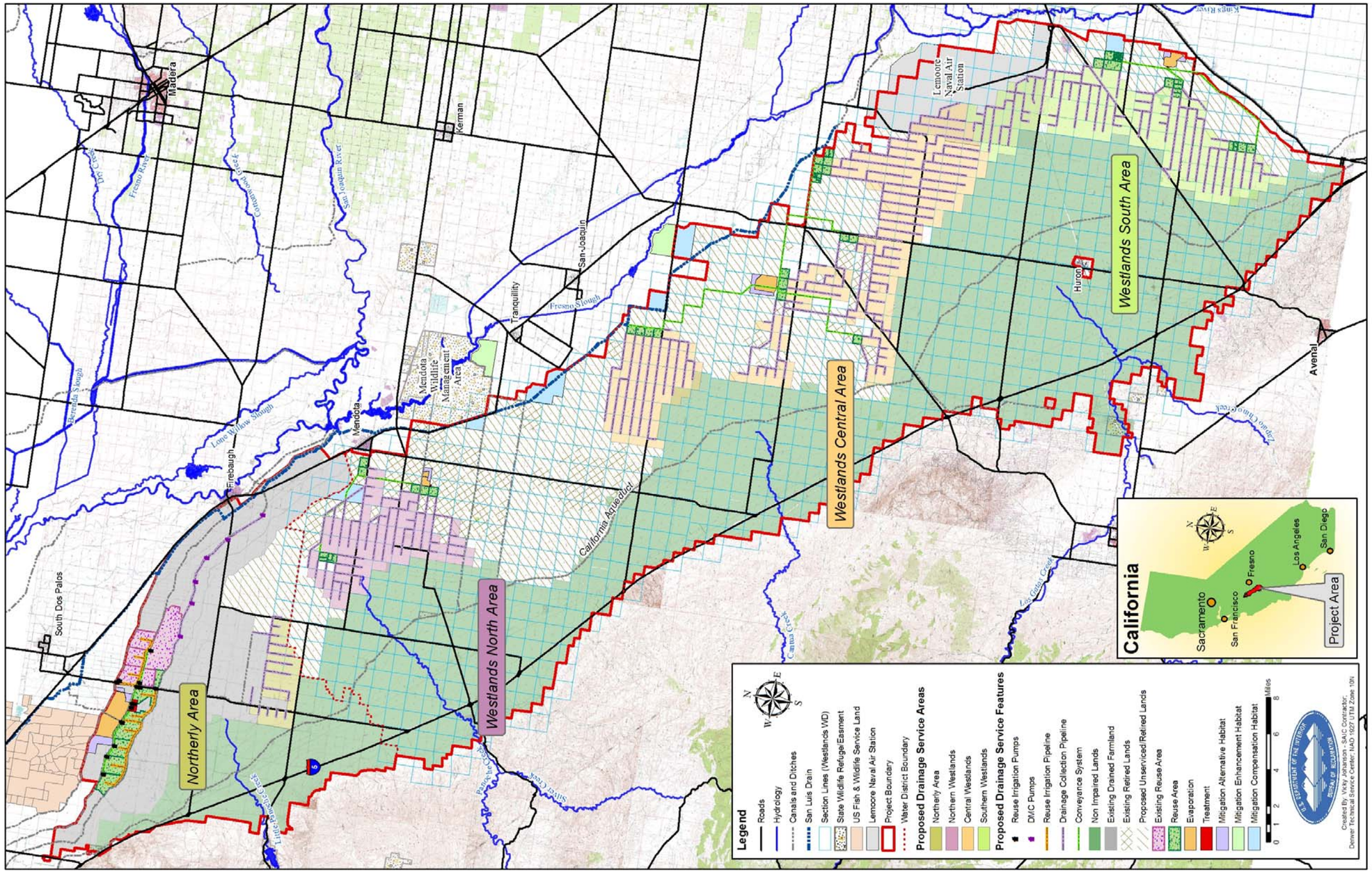

Figure 3. In-Valley/Water Needs Land Retirement Alternative features.

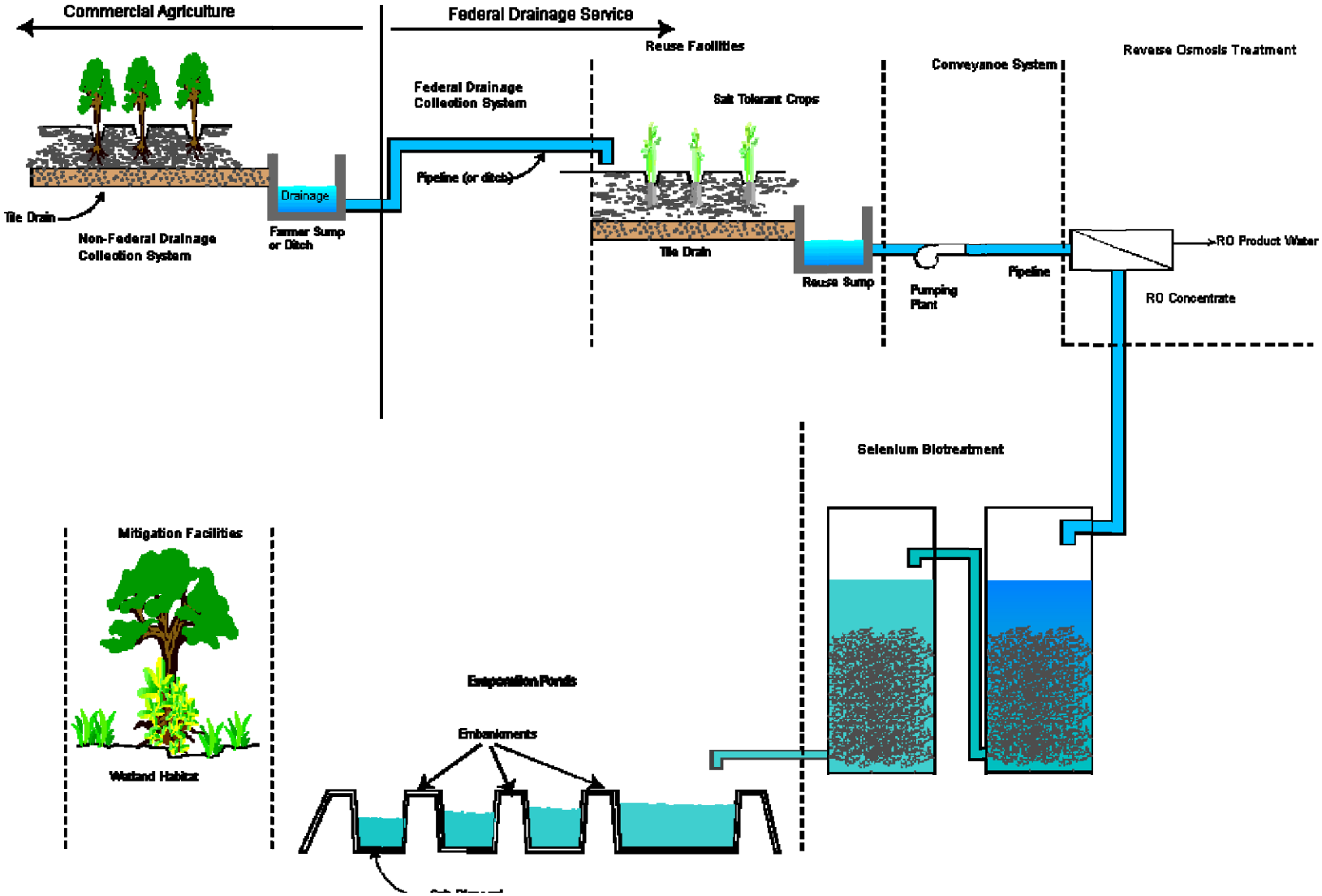

Figure 4. Proposed drainage service features for both feasibility alternatives.

drainage would be concentrated wastewater requiring subsequent biotreatment and disposal at evaporation ponds. The Northerly Area would have one large RO treatment plant, and Westlands would have three smaller plants.

- **Selenium Biotreatment**: Enclosed media-filled bioreactor tanks that utilize microbes to remove selenium from the concentrated waste stream from the RO plants. Selenium concentrations are reduced to below 10 micrograms per liter (µg/L) in the treated effluent to reduce potential environmental impacts when discharged to evaporation ponds for final disposal. Selenium is removed from the bioreactor tanks as part of a biological sludge waste stream that would require disposal at a licensed hazardous waste landfill. A biotreatment plant would be co-located with each RO treatment plant.

- **Evaporation Ponds**: A series of interconnected storage cells surrounded by embankments that impound the treated effluent from the biotreatment plants for sequential solar evaporation, leaving dry salts for in-place burial in the terminal evaporation cell. An evaporation pond facility would be co-located with each RO and biotreatment plant facility. Ponds would be constructed with geomembrane liners to minimize seepage potential and managed to maintain a minimum 4-foot depth.

- **Mitigation Facilities**: Wetland habitats constructed to mitigate potential adverse environmental impacts of the evaporation ponds. Wetlands would serve as both alternative and compensation mitigation and would provide both shallow and deep habitats. Potential environmental impacts were evaluated in the environmental impact statement (EIS).

- **Land Retirement**: Real estate interest will be acquired through the purchase of nonirrigation covenants that restrict irrigation water use but permit the land to be used for grazing, fallowing, and dry-land farming. Land retirement is considered a feature of drainage service because it reduces contributions of water to the shallow groundwater table. Cost data and assumptions for acquisition of lands and rights are provided in attachment 2.

Cost Estimates

A review of this Feasibility Design Appendix was performed in accordance with the Bureau of Reclamation (Reclamation) manual temporary release of Policy, Independent Oversight of Design, Cost Estimating, and Construction (DEC) (FAC TRMR-12). This Feasibility Design Appendix addresses and incorporates the DEC recommendations as agreed to by the Directors of the Mid-Pacific Region and Technical Resources. Feasibility level construction cost estimates for each alternative are presented in tables 2 and 3 below with the

Table 2. Feasibility level cost construction estimates for the In-Valley/Drainage-Impaired Area Land Retirement Alternative

Description	Total Field Cost	Noncontract Cost	Total Construction Cost	Percent of Total Cost (%)
Total Project Costs	**1,975,907,000**	**262,242,000**	**2,238,149,000**	**100.00**
Collection System	14,533,000	3,941,000	18,474,000	0.83
Conveyance System	52,774,000	14,333,000	67,107,000	3.00
Reuse Areas	199,024,000	56,007,000	255,031,000	11.39
RO Treatment Plant	34,419,000	9,618,000	44,037,000	1.97
Selenium (Se) Biotreatment Plant	103,535,000	26,465,000	130,000,000	5.81
Evaporation Ponds	336,022,000	92,478,000	428,500,000	19.15
Mitigation	35,600,000	9,400,000	45,000,000	2.01
Retired Land	1,200,000,000	50,000,000	1,250,000,000	55.85

Table 3. Feasibility level cost construction estimates for the In-Valley/Water Needs Land Retirement Alternative

Description	Total Field Cost	Noncontract Cost	Total Construction Cost	Percent of Total Cost
Total Project Cost	**2,222,852,500**	**464,262,500**	**2,687,115,000**	**100.00**
Northerly Area - Project Cost	*775,907,000*	*212,242,000*	*988,149,000*	*36.77*
Collection System	14,533,000	3,941,000	18,474,000	
Conveyance System	52,774,000	14,333,000	67,107,000	
Reuse Areas	199,024,000	56,007,000	255,031,000	
RO Treatment Plant	34,419,000	9,618,000	44,037,000	
Se Biotreatment Plant	103,535,000	26,465,000	130,000,000	
Evaporation Ponds	336,022,000	92,478,000	428,500,000	
Mitigation	35,600,000	9,400,000	45,000,000	
Westlands - Project Cost	*816,945,500*	*222,020,500*	*1,038,966,000*	*38.66*
Collection System	218,810,000	59,190,000	278,000,000	
Conveyance System	54,748,500	14,760,500	69,509,000	
Reuse Areas	84,490,000	23,690,000	108,180,000	
RO Treatment Plant	25,186,000	6,891,000	32,077,000	
Se Biotreatment Plant	83,545,000	23,455,000	107,000,000	
Evaporation Ponds	325,746,000	87,254,000	413,000,000	
Mitigation	24,420,000	6,780,000	31,200,000	
Retired Land	630,000,000	30,000,000	660,000,000	24.56

exception of the cost estimates for the RO treatment plants. Cost estimates for the RO treatment plants are appraisal level because they were generated from computer software that uses cost data from other plant construction projects. The RO treatment cost estimates represent less than 3% of the total project construction cost. The RO and other technologies employed in the designs for drainage treatment are considered to be established and proven technologies; however, additional pilot studies will be needed during final design to optimize construction and operational details. Consequently, the cost estimates provided herein for the RO treatment plants include higher than normal contingency allowances to address the uncertainties regarding treatment technologies. Project cost estimates and detailed construction cost estimates for both alternatives are presented in attachment 3.

Implementation Schedules

Detailed Gannt charts for implementation of both alternatives are provided in attachment 4. Summary descriptions and schedules are presented in the following paragraphs.

In-Valley/Drainage-Impaired Area Land Retirement Alternative

The implementation schedule for the In-Valley/Drainage-Impaired Area Land Retirement Alternative is shown below in figure 5. Most tasks are completed in about 6 years; however, a second construction phase for additional mitigation facilities may be implemented depending on the results of monitoring impacts after the first phase is completed.

In-Valley/Water Needs Land Retirement Alternative

The implementation schedule for the In-Valley/Water Needs Land Retirement Alternative is shown below in figure 6. The chart indicates that most tasks for providing drainage to the Northerly Area and the Westlands span approximately 10 years from design data collection through construction of all features, with the second phase of mitigation work, if required, finishing after 11 years have elapsed.

Appropriation Ceiling

The San Luis Unit was authorized with two appropriation ceilings. Section 8 of Public Law 86-488, 74 Statute 156, June 3, 1960, the authorizing legislation for the San Luis Unit, states *"There is hereby authorized to be appropriated for construction of the works of the San Luis Unit, including joint-use facilities, authorized by this Act, other than distribution systems and drains, the sum of $290,430,000, plus such additional amount, if any, as may be required by reason of changes in costs of construction of the type involved in the San Luis Unit as shown by engineering indexes…."* and *"There are also authorized to be appropriated, in addition thereto, such amounts as are required (a) for construction of such distribution systems and drains as are not constructed by local interests, but not exceeded in total cost the sum of $192,650,000…"*

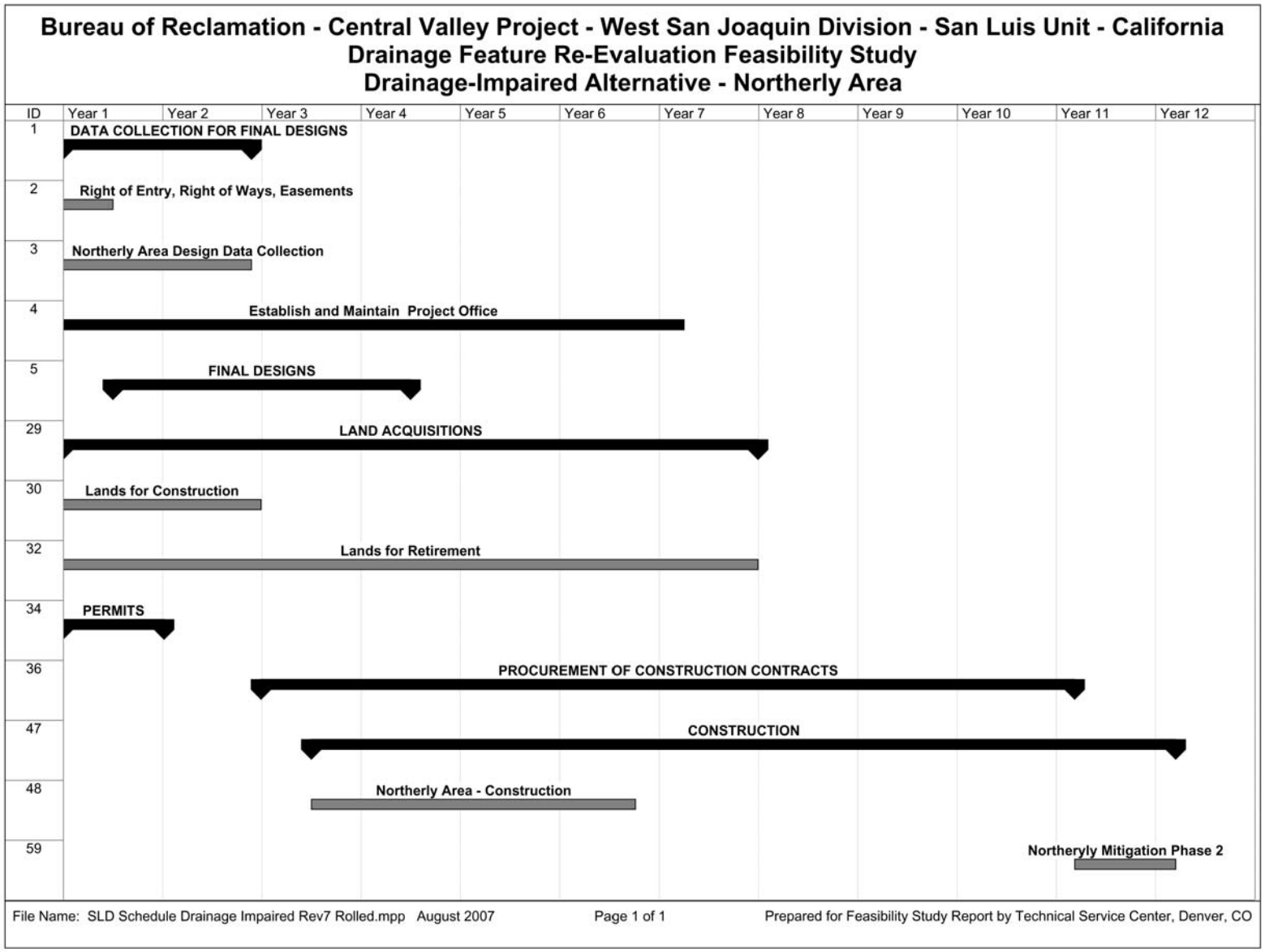

Figure 5. Implementation schedule for the Drainage-Impaired Alternative.

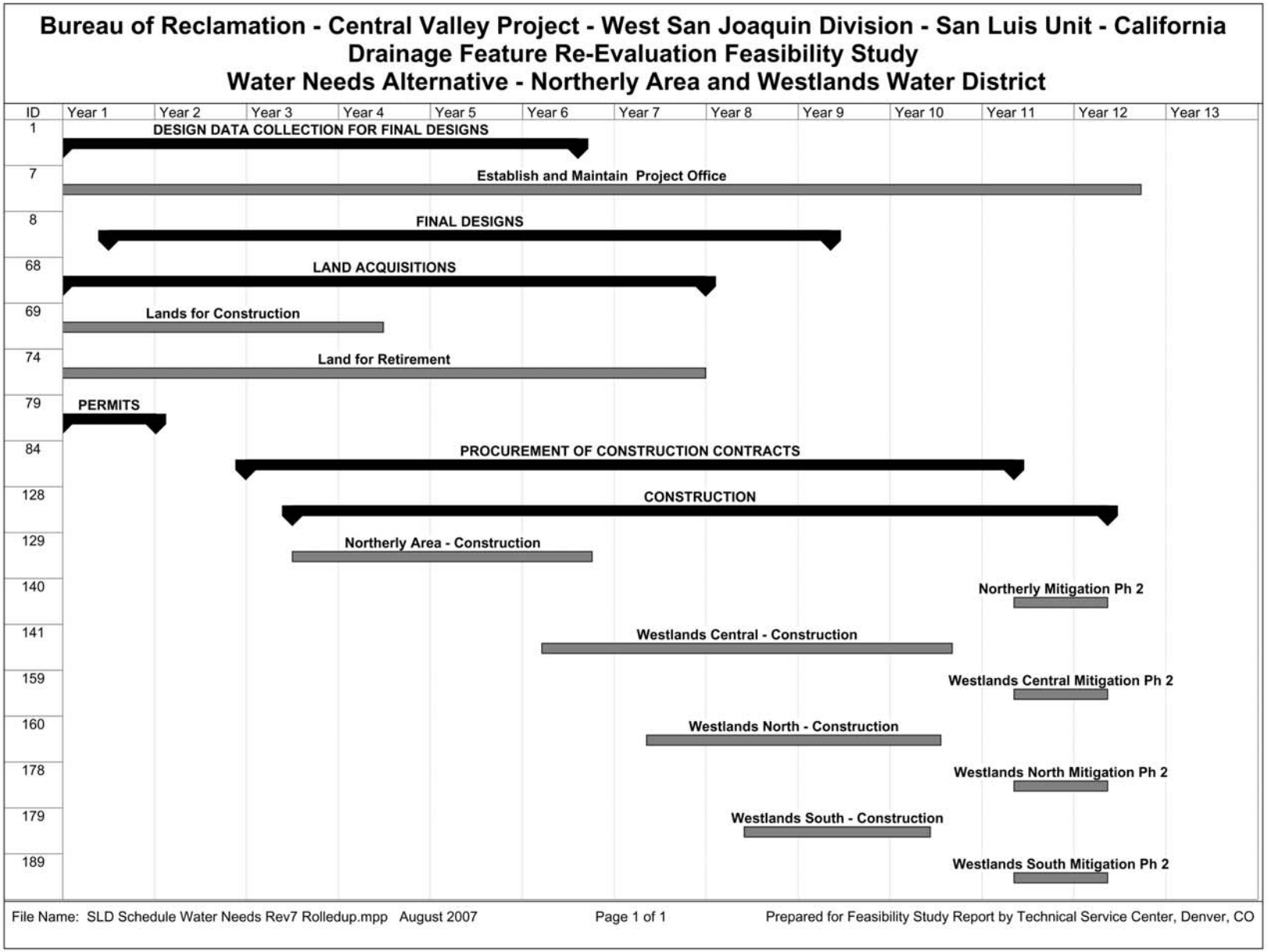

Figure 6. Implementation schedule for the Water Needs Land Retirement Alternative.

The construction of project works, except for distribution systems and drains, are covered by an indexable ceiling. The ceiling for the distribution systems and drains is not subject to indexing. As facilities are constructed, the costs of construction are applied to one of the authorized ceilings. Construction of the joint-use and Federal (only) facilities are applied against the indexable ceiling. Included in the Federal facilities is a facility called the "interceptor drain."

The only costs applied against the $192,650,000 are the costs of (primarily) Westlands distribution and collector drain systems.

The ceiling for the distribution systems and drains was exceeded in fiscal year (FY) 1977 when the cost of constructing the San Luis Drain was moved from the indexable ceiling for the joint-use and federal facilities to the ceiling for distribution systems and drains pursuant to a November 5, 1976 Solicitor's Opinion. Appropriate congressional committees were notified; and on June 15, 1977, Public Law 95-46 was enacted which provided $31,050,000 *"for continuation of construction of distribution systems and drains on the San Luis Unit. . . .."* A determination was later made, and tested by a Government Accounting Office Investigation, that the new ceiling figure is $236,176,311 which includes a number of factors, including $31,050,000 provided by Public Law 95-46.

This ceiling was computed after the November 1976 Solicitor's Opinion reclassified the San Luis Drain from main project facilities component to the distribution systems and drains component. Shifting of over $40 million of cost caused the distribution systems and drains ceiling to be exceeded. This figure was first presented to the Congress in the San Luis Unit PF-65 for the FY 1979 Budget Justifications.

A letter from the Acting Commissioner dated June 24, 1985; subject: Increase in Appropriation Ceiling for San Luis Ceiling for San Luis Unit, Central Valley Project, states *"It has been determined that the appropriation ceiling for the San Luis Unit Distribution and Drainage System can be increased by $7 million based on the general legislative provisions of our Reclamation Instructions."* In FY 1985, $7 million was added to the ceiling under the authority of the Secretary of the Interior to use available funding for emergency situations (studies at Kesterson).

In FY 1986, $9,794,000 was added to the ceiling, based on provisions in the Joint Conference Report supporting the FY 1986 Energy and Water Development Appropriation which allows that the studies (at Kesterson) continue *"at the present levels of effort."* The appropriation ceiling for distribution systems and drains is now $252,970,311 and has been stated as such in the Budget Justifications documents for a number of years.

Table 4 summarizes the available funding ceiling for the San Luis Unit.

Table 4. Available funding ceiling for the San Luis Unit

In-Valley/Drainage-Impaired Area Land Retirement Alternative	Main Project Facilities *Indexing Authorized*	Distribution System and Drains *No Indexing Authorized*
Authorization:		
Public Law 86-488 (June 3, 1960)	$290,430,000	$192,650,000
Public Law 95-46 (June 15, 1977)		31,050,000
Indexed ceiling (as of 10-08)	802,316,000	223,700,000
Computed ceiling		236,176,311
Increases: Emergency Authority		7,000,000
Fiscal Year 1986 Appropriation		9,794,000
	802,316,000	252,970,311
Obligations through September 30, 2006:		
Distribution Systems and Drains		185,815,162
Main Facilities and Joint-Use Facilities	440,796,372	
Available Ceiling:	**361,519,628**	**67,155,149**

The total remaining construction cost ceiling for the San Luis Unit is $428,674,777. The total estimated cost to implement the In-Valley/Drainage-Impaired Area Land Retirement Alternative is $2.3 billion. The total estimated cost to implement the In-Valley/Water Needs Land Retirement Alternative is $2.7 billion. Thus, implementation of either of these action alternatives would exceed the combined remaining construction cost ceilings for the San Luis Unit.

Proposed Facilities for the Northerly Area

This section presents the feasibility designs for the proposed drainage service facilities in the Northerly Area. The Northerly Area facilities are identical for either the In-Valley/Drainage-Impaired Area Land Retirement Alternative or the In-Valley/Water Needs Land Retirement Alternative. The Northerly Area consists of districts within the San Luis Unit that lie north of Westlands and lands adjacent to the San Luis Unit that are part of the Grassland Drainage Area. The term "drainage" is used throughout this report and always refers to subsurface drainage that results from irrigation of farmlands unless otherwise noted.

Drainwater Quantity

Groundwater and drainage analyses conducted in the EIS (refer to Appendix C of the EIS) developed some of the fundamental parameters used to project drainwater quantity. Specifically, the EIS developed the following assumptions:

1. **Quantity of drainage-impaired lands**: Conversations with landowners within the Northerly Area districts were used as the basis to predict that 81,000 acres of drainage-impaired lands will require drainage service during the 50-year planning horizon of the project. These land areas consist of 45,000 acres within the San Luis Unit and 36,000 acres in the Grassland Drainage Area adjacent to the San Luis Unit.

2. **Quantity of lands having installed tile drains**: It is reasonable to expect that not all of the areas needing drainage service would actually have subsurface drainage systems installed. Some farmers would elect not to drain based on economic considerations. Therefore, it was assumed that two-thirds of the areas designated as needing drainage service (i.e., 54,000 acres) would actually have subsurface drainage systems installed. A modeling effort analyzed this assumption and found that sufficient arability of the root zone within the entire drainage-impaired area can be maintained with this drainage condition.

3. **Drainage rate**: The projected drainage rate for newly installed tile drains in the Northerly Area is 0.42 acre-foot per tiled acre per year. This estimate was based on a variety of factors including monitoring data from the Grassland Area farmers and Grasslands Bypass Project, regional groundwater modeling results, and the professional judgment of the EIS technical team.

The assumptions above were incorporated into the feasibility study as the starting point to develop estimates of the quantity of drainwater that would enter into the proposed Federal drainage service facilities. These assumptions and their underlying analyses in the EIS provide the foundation for concluding that the drainage quantity estimates and proposed Federal drainage system capacity are feasible and adequate to achieve the project purpose (i.e., ". . . a long-term, sustainable salt and water balance in the root zone of irrigated lands. . ."). For ease of analysis, drainwater flows entering the Federal system are separated into three categories: existing tile drains, proposed tile drains, and the proposed Delta-Mendota Canal (DMC) interceptor pipeline. The analyses and estimates for each are described in the paragraphs below.

Flows from Existing Tile-Drained Farmland

Drainage is currently collected from about 48,000 acres of farmland using tile drains that primarily discharge into a network of open ditch collector drains (ditches). These ditches flow by gravity and are combined into the Grasslands Bypass Channel, which discharges into the San Luis Drain through an agreement in the Grasslands Bypass Project. The combined drainage flows from the Grassland Area into the San Luis Drain are measured at Station A, which is a flow measuring point located near the inlet to the San Luis Drain. Flow is measured at Station A as the depth of water over a sharp-crested weir.

During the irrigation season (approximately May through September), the flows at Station A are made up of tile discharge from existing tiled lands, shallow groundwater accretion into the open ditch drain network, and a small amount of accidental surface tailwater discharges. During the fall (before the winter storm season), discharges through Station A are comprised entirely of tile water discharges and shallow groundwater accretion. During the storm season (usually late December through April), rainfall can provide a significant contribution to flows at Station A in the form of surface runoff, as well as tile discharges resulting from rainfall infiltration through the soil.

Winter storm events are a major source of variable and uncontrollable discharges into the existing open drainage infrastructure and occasionally result in localized area flooding. Regulating reservoirs to control the high variable flows are not considered a viable option because of the potentially hazardous levels of selenium in the drainwater. Therefore, the combined drainage and precipitation flows collected in the existing drain system will be managed in the proposed Federal facilities on a daily basis using a combination of reuse crop irrigation, reuse area groundwater storage, and treatment.

An estimate of future Northerly Area drainage flows and required reuse capacity was provided by Summers Engineering, *In-Valley Drainage Solution Projects – Summary Brief* (October 2004), on behalf of the Grassland Area drainage districts. The brief contains estimates of anticipated drainage reductions resulting

from future source control measures and drainage recycling. The results of the districts' recent drainage reduction efforts are evident in the trend of decreasing flow measurements recorded at Station A during the past several years (see figure 7). This trend is expected to continue given the districts' stated intentions to continue implementing drainage reduction measures. The districts' goal is to reduce drainage flows to a level of about 14,200 acre-feet (acre-ft) per year.

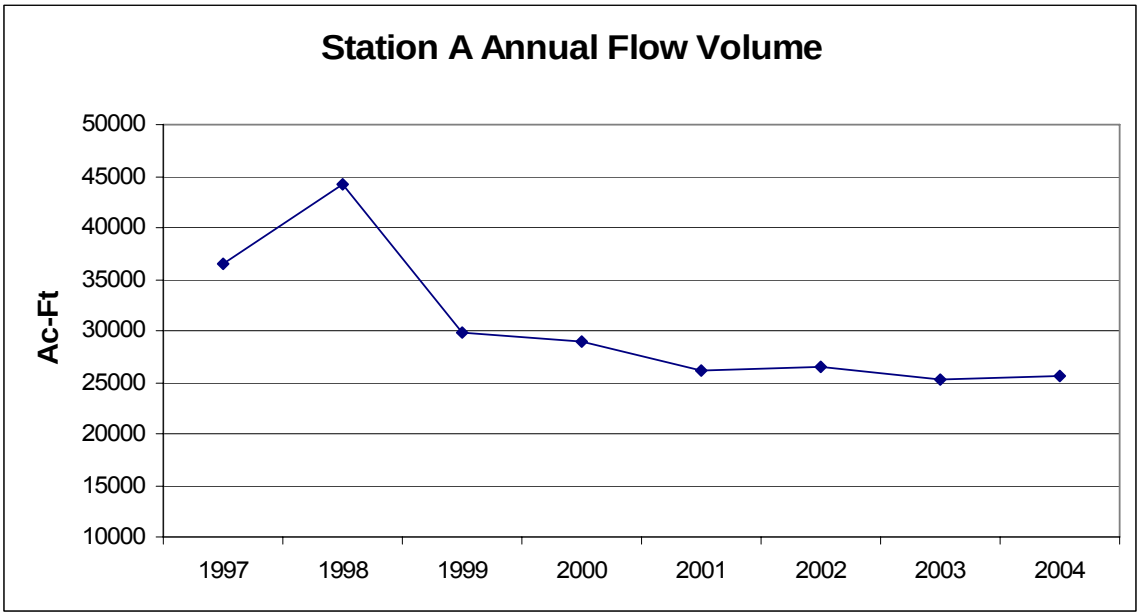

Figure 7. Annual flow volumes measured at Station A.

The annual drainage flows at the time Federal drainage service begins will be lower than the 25,600 acre-ft recorded at Station A in 2004 but higher than the future goal of 14,200 acre-ft. District and Reclamation staff agree that a reasonable assumption for feasibility designs is a drainage rate of 0.42 acre-ft per drained acre per year, which yields 20,160 acre-ft per year for the existing 48,000 acres of drained farmland. This amount is consistent with the districts' planned drainage reduction effort and the renewal of the downward trend prior to 2001 depicted in figure 7.

Flows from Future Tile-Drained Farmland

Based on discussions with personnel from the Northerly Area districts, it is assumed that tile drains will be installed in approximately 5,510 acres of farmland not currently connected to the drainage system. Using the assumed future maximum drainage rate of 0.42 acre-ft per drained acre per year, the annual drainage discharge for this area will be approximately 2,314 acre-ft per year. This quantity is assumed to be both the average and maximum annual flow since most of the anticipated drainage reduction measures may not impact this new drainage

area. Drainage collected from the additional 5,510 acres of farmland would be conveyed via new collection pipelines and discharged to the closest existing open ditch collector drains.

Flows Intercepted from Existing Sumps along the DMC

The total annual discharges of the DMC sumps over a 14-year period are shown in figure 8. A new pipeline would be constructed as part of the proposed Federal facilities to intercept these flows and convey them to the Northerly Area reuse facility. Since the reasons for the flow variation and trend shown in figure 8 are unknown, it is conservatively assumed that the average and maximum annual flow volumes are equal to the maximum volume recorded—1,782 acre-ft in 1988.

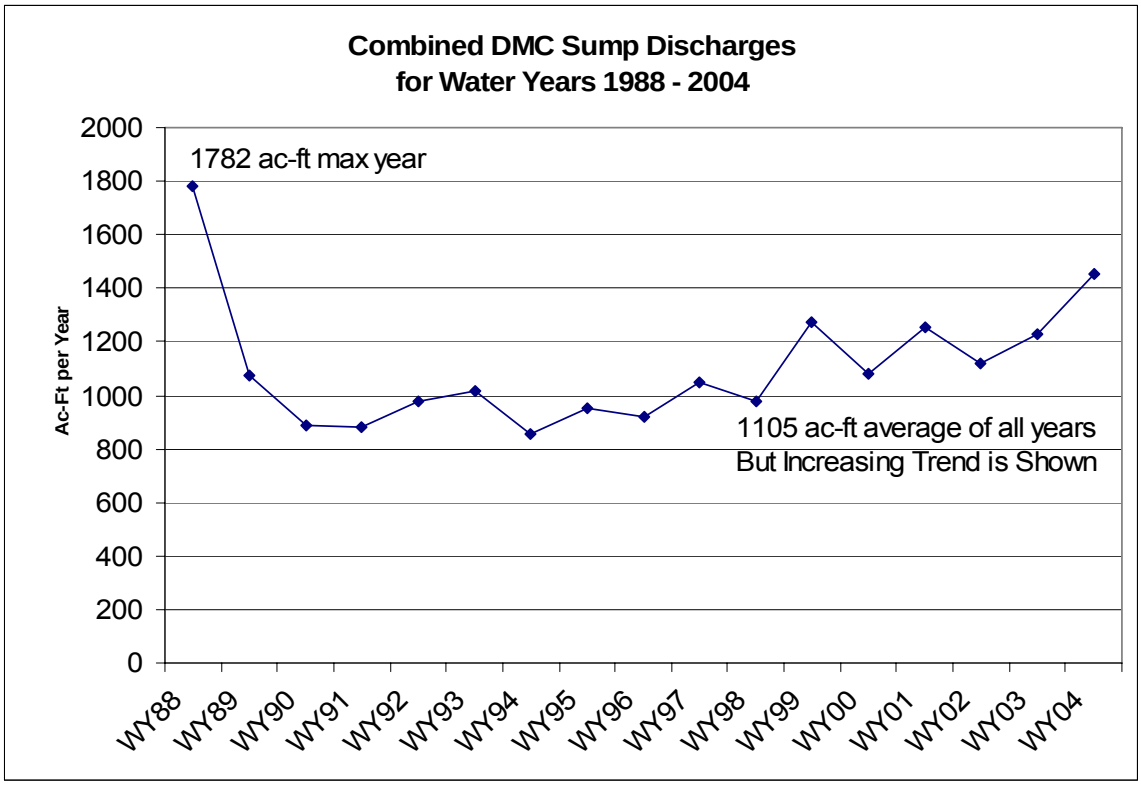

Figure 8. Combined annual DMC sump flows, 1988–2004.

Total Northerly Area Inflows to Federal Drainage Service System

The estimated flows from each of the three sources are summed to estimate the total flow into the proposed Federal drainage service system in the Northerly Area. Table 5 summarizes the projections of the future average annual flow and the future maximum annual flow.

Table 5. Northerly Area drainage flow volume estimates

Flow Source	Future Average Annual Flow Volume (acre-ft)	Future Maximum Annual Flow Volume (acre-ft)
Existing Drainage System	14,200	20,160
Proposed Drained Farms	2,314	2,314
Proposed DMC Interceptor Pipeline	1,782	1,782
Annual Total	**18,296**	**24,252**

Design Flow Volumes and Rates for Drainage Service

The drainage service inflows shown in table 5 are annual flow volumes. Due to the uncontrolled nature of the existing open drainage infrastructure, actual drainwater flows are quite variable; therefore, the instantaneous flow rate at any point in time could be significantly higher or lower than these annual flow rates.

Feasibility designs for the various drainage service features require a detailed assessment of expected drainwater flow rate variations. Daily historical drainwater flow measurements at Station A were used as inputs to develop a model for flow management and design of drainage service features.

The years 2003 and 2004 had annual measured flows of 25,386 and 25,615 acre-ft, respectively, at Station A (figure 7), which are about 5% higher than the projected maximum annual drainwater inflows to the Federal drainage service system. The daily flow records from Station A for these 2 years were used to develop a model of flow management for feasibility designs of all drainage service features and their individual components (pumps, pipes, tanks, etc.). These individual components are sized to meet the maximum capacity requirements as determined by the flow management model using the 2003–2004 daily flow inputs from Station A. The flow management model is described further in the "Drainage Reuse Facilities" portion of this section because that is primarily where flow variations are managed. The resulting design capacities of individual drainage feature components are described throughout this section.

Drainage Service Capacity

The drainage service capacity is best described in terms of the nominal flows through the system because actual real-time capacity will vary in response to farming practices and hydrologic conditions, which are constantly changing variables. The overall nominal system capacity is the maximum annual flow volume shown in table 5. Flow volumes through the drainage service system are reduced by two primary features: reuse facilities and RO treatment.

Reuse facilities reduce the flow volume by 73% through ET where drainwater is used to irrigate salt-tolerant crops. The effluent from reuse facilities is conveyed

to an RO treatment plant, which extracts 50% of the remaining flow volume as clean product water, which can be used for irrigation of commercial crops. The average annual flow volumes of the various features in the drainage service system are shown in the flow schematic in figure 9. The nominal maximum annual flow capacity of the overall system is shown in the flow schematic in figure 10. The designs of individual drainage service features incorporate technology- or equipment-specific peaking factors and are described throughout this appendix. A more detailed flow schematic for Northerly Area drainage service components is provided in figure 11.

Exceedance of Drainage Service Capacity

The daily flow records show large daily fluctuations in Station A flows that are much greater than the variations in the annual flow volumes shown in figure 7. As noted previously, these flow variations result primarily from storm events, which produce temporary uncontrollable surges to the open ditch network. These storm events and accompanying flow surges in the existing drainage infrastructure occasionally produce flooding in the local farmlands.

It is not the goal of this project and these feasibility designs to prevent future occurrences of flooding. Therefore, it is possible and expected that the Federal drainage service capacity will occasionally be exceeded due to storm events and produce flooding in the local farmland. The frequency and intensity of these potential flood events were not evaluated as part of this study but would be dependent upon the interaction of future farming practices and hydrologic conditions.

Drainwater Quality

Projections of drainwater quality parameters were developed and analyzed in Appendix C of the EIS. Groundwater quality data collected from monitoring wells in the Northerly Area were tabulated and analyzed using groundwater and geostatistical modeling. The resulting projections of drainwater quality for flows into the proposed Federal drainage service system in the Northerly Area are found in table C2-7 of the EIS. The feasibility analyses and designs presented in this report are based upon these influent drainwater quality projections from the EIS.

Drainwater quality is modified as it flows through the drainage service system and is an important factor in process design and material selection for all of the drainage service features. In the reuse facilities, drainwater quality is affected by ET, geochemical interactions with soils, and commingling with shallow groundwater. The impact of these interactions is analyzed and discussed in the RO treatment portion of this section because the plant design is highly dependent on the quality of drainwater that is conveyed to it from the reuse facilities.

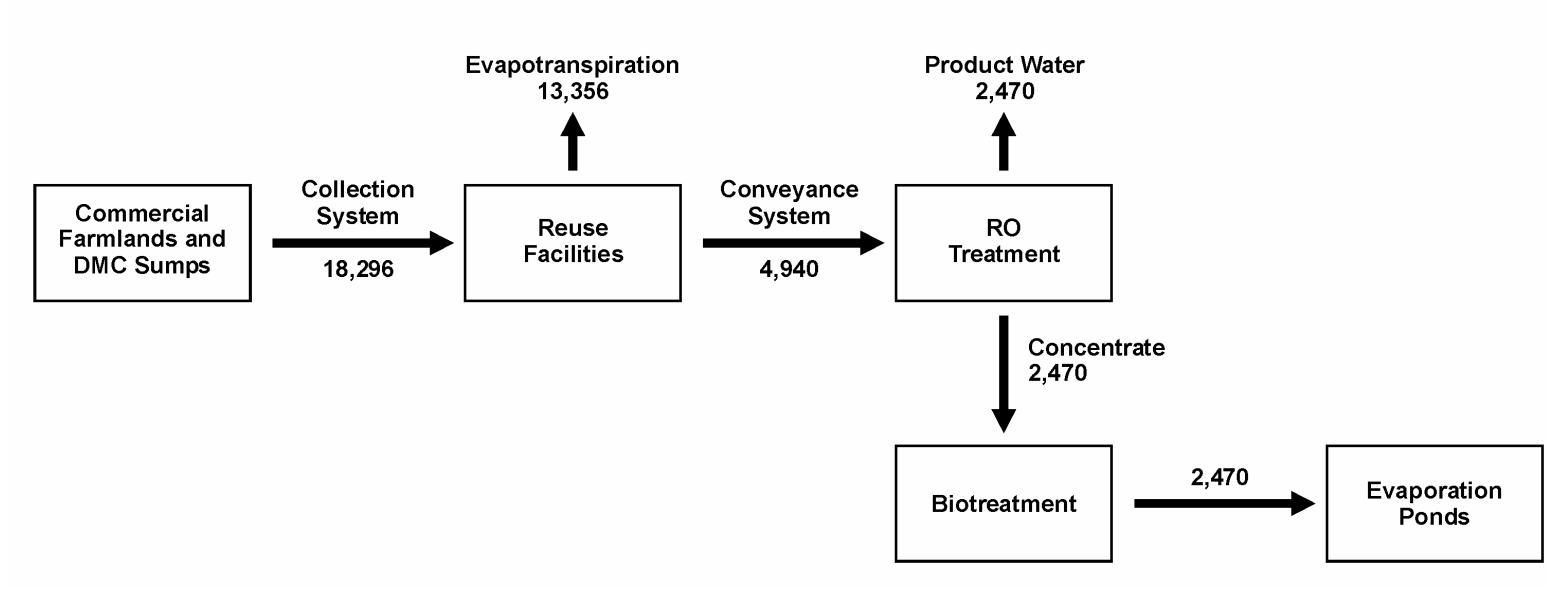

Figure 9. Northerly Area drainage service system—average annual flow volumes (acre-ft).

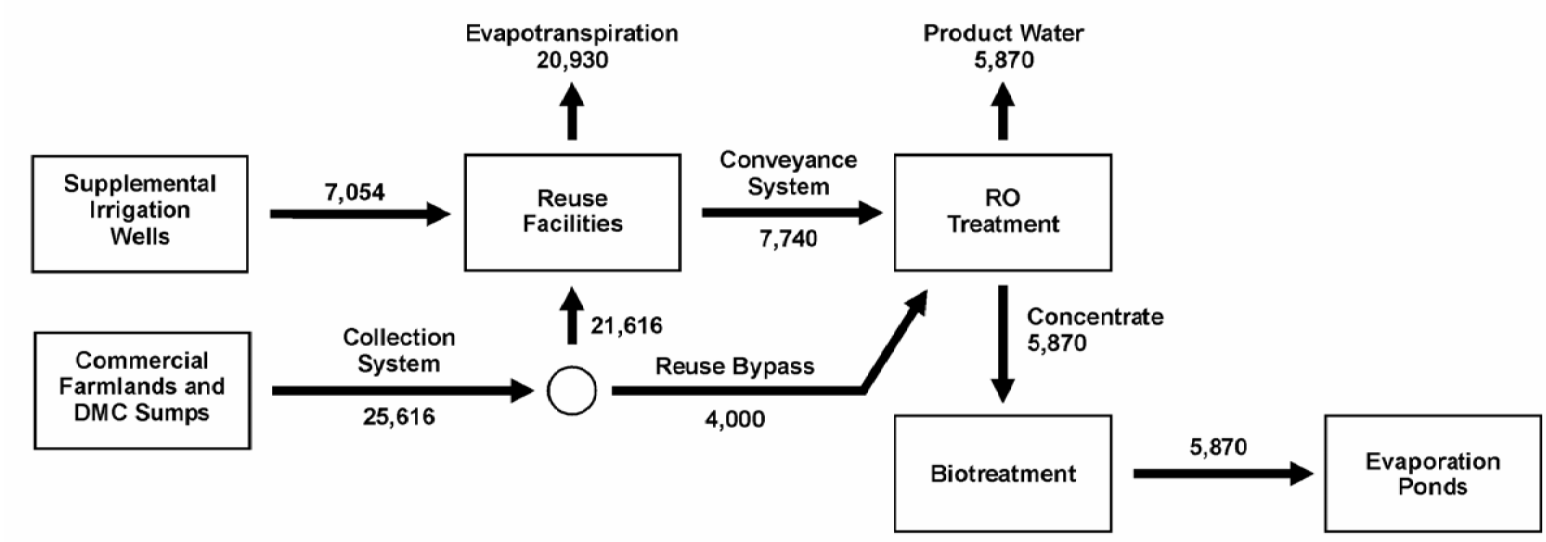

Figure 10. Northerly Area drainage service capacity—nominal maximum annual flow volumes (acre-ft).

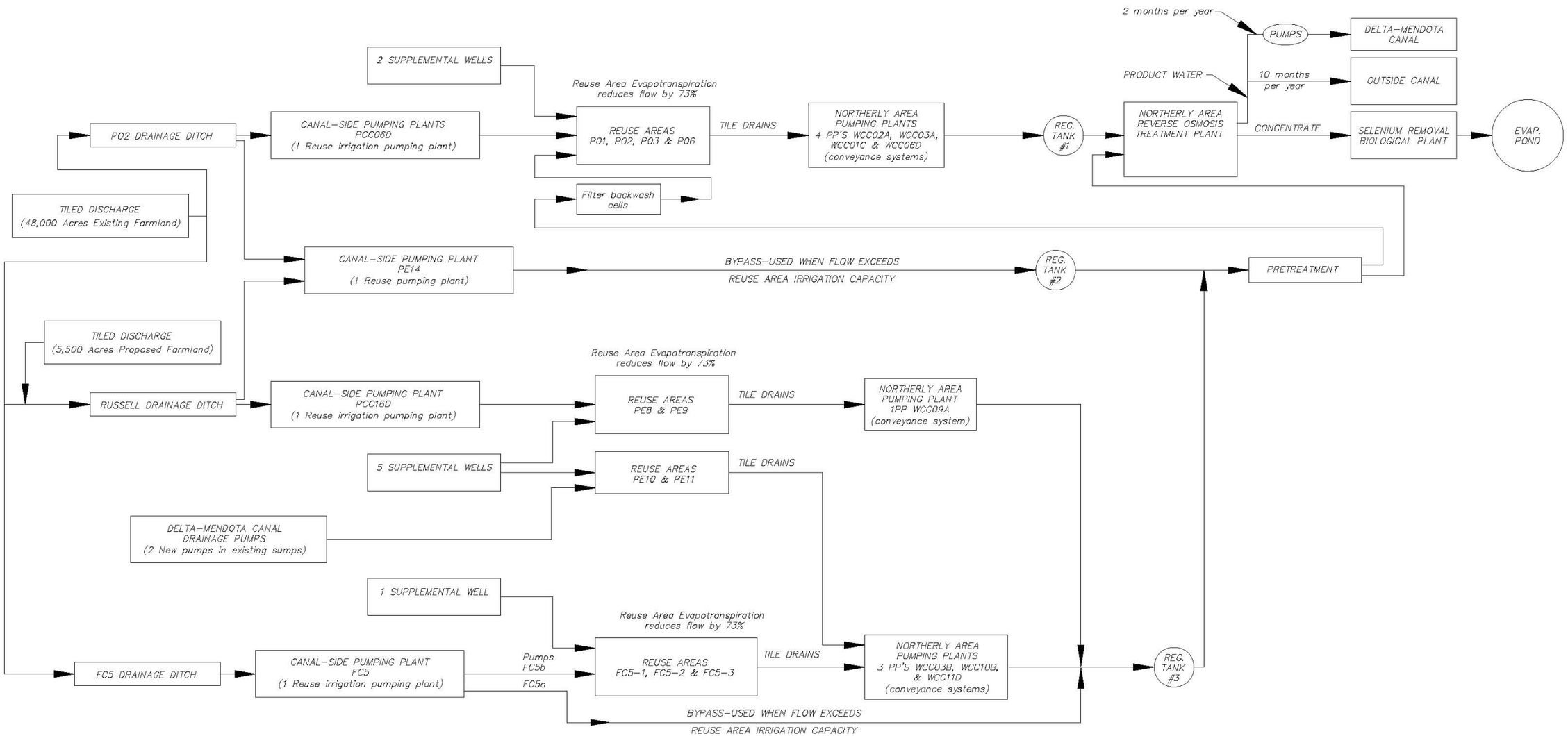

Figure 11. Flow schematic of drainage service in the Northerly Area.

The concentration of dissolved drainwater constituents is doubled by the RO treatment process as it extracts 50% of the flow volume as desalted product water. The concentrated waste stream from the RO plant is delivered to the biotreatment plant, which removes about 99% of the dissolved selenium constituents.

The selenium-depleted effluent is discharged to evaporation ponds, where the concentrated drainwater gradually evaporates, leaving behind precipitated salts. Drainwater quality changes and their significance to the feasibility designs are presented throughout this section.

Drainage Collection System

The drainage collection system for the Northerly Area consists of a network of tile drains, sumps, pumps, pipelines, and open unlined drainage ditches that are used to collect drainage from about 54,000 acres of commercial farm fields and convey it to reuse facilities. The Northerly Area collection system also includes a pipeline with pumps to convey shallow groundwater collected from existing sumps along the DMC to the reuse facilities. The drainage collection system is comprised of both Federal and non-Federal components, of which some are existing and some are proposed, as described in the sections below. Refer to figure 4 for the demarcation line between Federal and non-Federal components.

Non-Federal Components

A significant portion of the collection system has already been constructed and is currently operated by the Northerly Area districts; this existing infrastructure is not part of the proposed Federal facilities but will be integrated with it. Additionally, the installation of new on-farm tile drains, sumps, and pumps to collect drainage from farms are not part of the proposed federally furnished components of the drainage collection system (refer to figure 4).

Existing Non-Federal Components

Existing non-Federal components include:

- Tile drains, sumps, and pumps on about 48,000 acres of farmlands currently being drained.
- Network of unlined drainage ditches and canals that currently receives drainage from the 48,000 acres of tiled farmland and conveys it to reuse areas and the Grasslands Bypass Project.
- Six existing sumps with pumps that currently collect shallow groundwater along the DMC and discharge it into the DMC. A portion of this pumped groundwater is assumed to derive from

local agricultural drainage, although the local districts do not consider these sumps to be part of their drainage collection system.

Assumed Future Non-Federal Components

The assumed future non-Federal components include the following:

- Construction of tile drains, sumps, and pumps by farmers on about 5,500 acres of farmlands not currently being drained.
- On-farm and district improvements that reduce the quantity of drainage such as high-efficiency irrigation, lining of irrigation supply ditches and canals, groundwater pumping to increase deep percolation, and drainage recycling.

Proposed Federal Components

There are two primary Federal components of the drainage collection system and these are shown in figure 12:

- Collector pipelines to convey drainage from newly drained farmlands. Buried collector pipelines would be constructed to collect drainage from about 5,510 acres of farmlands, where it is anticipated that farmers will install on-farm drainage systems consisting of tile drains, sumps, and pumps. Collector pipelines across this area will convey and discharge subsurface drainwater to nearby existing drainage ditches. The Government would also install mechanical and electrical equipment to control the flow of drainwater into the collector pipelines from the non-Federal tile drain sumps.
- DMC interceptor pipeline from existing sumps to reuse area. The Government would replace pumps in three of the six existing sumps along the DMC and construct a pipeline to convey shallow groundwater collected in these sumps to the reuse area designated as Field PE11.

The designs for the proposed Federal components are described in the following paragraphs.

Drainage Collector Pipelines

Approximately 5,510 acres of additional farmland would be connected to the existing drainage system as part of the Federal drainage collection system. Farmers and districts would be responsible for installing tile drains and drainage collection sumps with submersible pumps at the low point of each quarter section (160 acres) of drained farmland. Designs and cost estimates are not included for the non-Federal portion of the drainage collection system (i.e., tile drains, sumps, and submersible pumps).

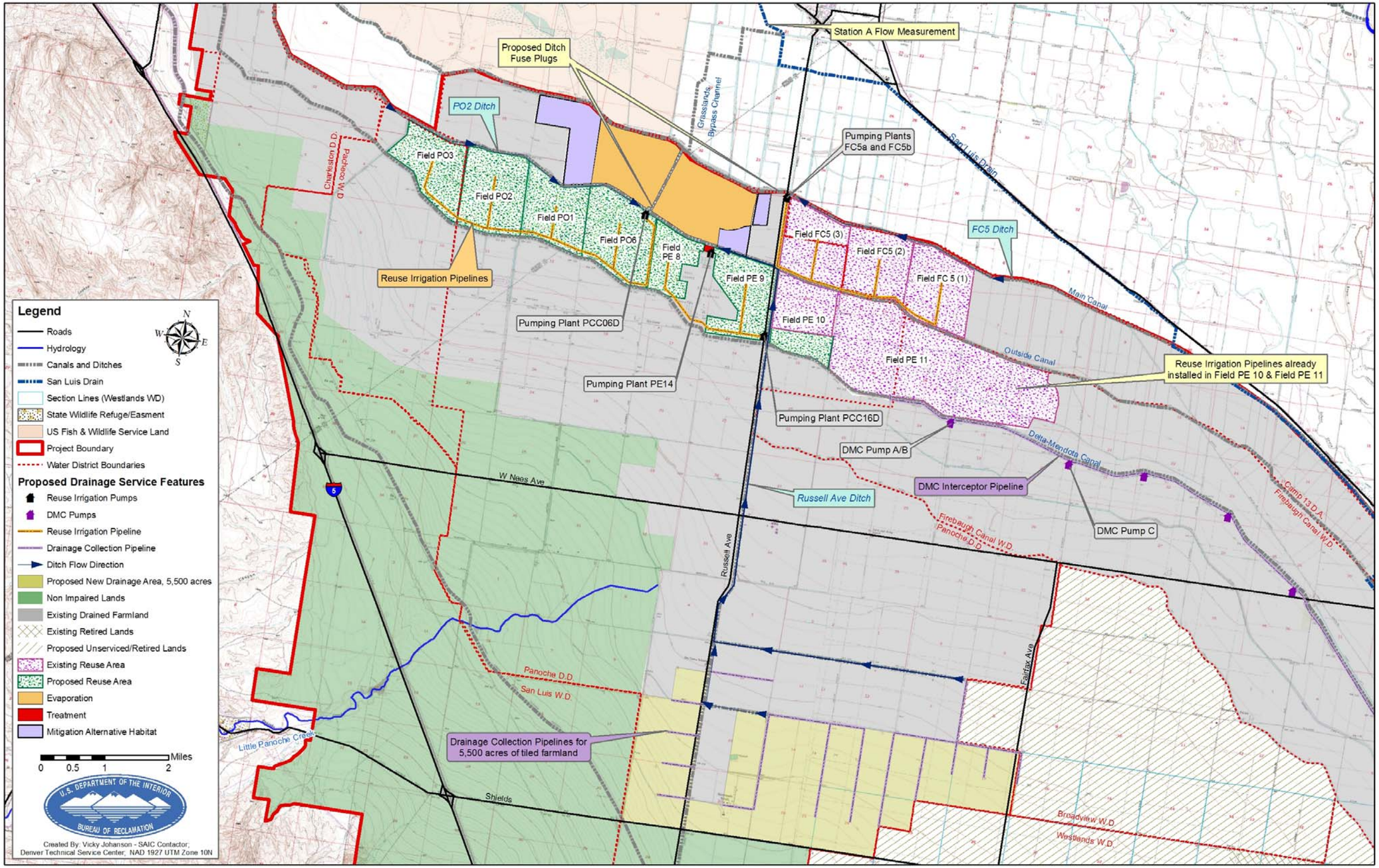

Figure 12. Proposed drainage collection system and reuse facilities in the Northerly Area.

The new buried Federal collector pipelines would convey the drainage received from the farmers' sumps to the nearest existing downgradient collector ditch. These pipelines are designed for full pressurized flow conditions but are constructed with sufficient slope to permit gravity flow. Design of the collector pipelines requires the evaluation of both crop drainage needs in the commercial farmlands and irrigation supply needs for the downstream reuse facilities. The timing of drainage flows and irrigation supply flows is not concurrent; therefore, drainage collection design assumes installation of on-farm drain or sub-irrigation riser (DOS-IR) valves to permit temporary shallow groundwater storage as needed to manage the flows between the farmlands and the reuse facilities. Flows into the collector pipelines will be controlled by cycling the sump pumps and adjusting the DOS-IR valves on each contributing tile drainage system.

The collector pipelines must accommodate the larger of the maximum required drainage design flow or the maximum flow required for downstream irrigation of reuse areas. Analysis of these conditions determined that the controlling maximum flow condition for any pipeline is when all contributing farmlands are draining at the same time to meet the irrigation requirements for grasses in the receiving reuse area, which yields a maximum flow rate of 0.0012 cubic feet per second (cfs) per acre, or 0.87 acre-ft per acre per year.

Pipeline flow rates are determined by the sump pump discharge rate and the number of contributing sump pumps in operation. The sump pump discharge rate is directly related to the subsurface drainwater and surface water elevation in the farmers' sumps, which are dependent on the local water table elevation. These water elevations change in response to climate conditions and irrigation practices and can vary by as much as 6 feet during the year. To evaluate the potential impact on drainage flow rates in the collector pipelines, designers selected a Goulds WE Series Model 3885 submersible pump that farmers could install to drain a 160-acre parcel of farmland. The pump curve indicates a flow variation of 30% across the range of potential sump water elevations and a maximum flow of 0.0012 cfs per acre when the water elevation in the sump is at its highest point.

Connecting several sumps to a pipeline requires sump standpipes to accommodate pressure variations resulting from cycling of sump pumps (see drawing 805-D-10448). Flow analyses determined that pressure variations will induce temporary surges in the standpipes between 5.4 and 20.1 feet above ground surface. The cost of the sump standpipes is considerably less than the cost of increasing the size of the collector pipelines for the temporary flow increases. Therefore, all of the collector pipelines were designed for a constant flow rate of 0.0012 cfs per acre.

The collection system design uses pressurized, high density, polyethylene (HDPE) pipelines; head losses were computed with the Darcy-Weisbach equation, using a rugosity of 0.000005 feet. The hydraulic grade line is usually at or below the ground surface and never higher than 5 feet above the ground surface. The

minimum cover over the pipe is 3 feet. The design maintains flow through a combination of ground elevation change and pressure heads. The system does not require pressure tanks.

The design quantities include pipe, excavation, backfill, compacting backfill, and road crossings. Drawing 805-D-10449 shows the profile cut for a typical road crossing, and drawing 805-D-10450 illustrates the pipe trench pay line section using vertical pay lines. The actual section requiring a trench box for constructability and safety would look similar. All open trench excavations, including excavations with trench box or shoring, must be excavated in accordance with *Reclamation Safety and Health Standards*. Maintaining an open trench would be difficult in many areas. Much of the in situ soil would be unstable when water is present. Many of the soil layers are also very soft.

These conditions led to using a typical trench, as shown on drawing 805-D-10450. The trench would also be over-excavated to 1 foot below the pipe and then backfilled with compacted native material. The backfill would then be compacted up to 6 inches above the crown of the pipe, except for a 4-inch-thick layer of pipe bedding. The pipe bedding would be native material for pipe diameters less than 12 inches and select material for pipe diameters 12 inches and larger. The backfill would come from the material excavated from the trench. Due to the lack of groundwater mapping information, trench box excavation and associated earthwork quantities are assumed to be 20% of the total pipeline length.

Delta-Mendota Canal Sump Intercept System

Existing pumping plants pump shallow groundwater collected along the upgradient side of the DMC into the DMC. The Federal drainage collection system includes a pump and pipeline intercept system to incorporate this collected groundwater into the drainage service system. The pipeline design is HDPE and ranges in diameter from 10 to 18 inches along a total length of 57,000 feet.

Two of the existing pumping units in the groundwater collection system on the DMC would be replaced with two new pumping units, A/B and C. The units would be installed in two existing sumps located along the DMC. The pumps would discharge water into a new pipeline, which conveys drainwater to reuse areas PE10 and PE11. The two pumping units would be vertical turbine type pumps with fixed-speed, vertical induction motors.

The 10- and 12-inch unit piping and valves for pumping units A/B and C were not included in the feasibility level design. The unit piping and valves would be included in the final design. The single unit DMC drainage plants would utilize a 600-volt control board for operating the fixed-speed pumping unit. The layout of electrical equipment for the DMC pumping units is included in the typical layout drawing for all Northerly Area pumping plants (see drawing 805-D-10431). The electrical power distribution diagrams for these units are shown on a typical single-line drawing (805-D-10425).

Drainage Reuse Facilities

The reuse of irrigation drainwater by growing salt tolerant plants provides an opportunity to consume some of the drainwater through ET, resulting in a much reduced volume of drainwater requiring disposal. Reuse areas also provide groundwater storage capacity to attenuate variations in the drainage outflow from reuse areas and allow other treatment processes to perform more economically. In addition to growing salt tolerant crops, the reuse facilities provide for the control, management, and containment of the project area on-farm tile discharges.

There are ongoing reuse area operations in the Northerly Area and the Westlands Water District area. The San Joaquin River Improvement Project (SJRIP), operated by the Panoche Drainage District, and privately operated Red Rock Ranch (RRR) have been re-using drainwater as the irrigation supply for salt tolerant plants. The field experience of the SJRIP operation, as well as reuse operations by RRR in the Westlands area, provided some background information. Ongoing drainwater reuse at these sites will continue to provide practical field experience and information on crop types, crop rotation, soil salinity, drainage, and general operational guidelines.

The general requirements of the reuse areas are that they can sustain irrigated cropping for the life of the project (50 years) and beyond. Reclamation's land classification techniques have been applied to evaluate soils in potential reuse areas. Similarly, Reclamation's subsurface drainage investigation methods have been used to evaluate the drainage required for each reuse area. The specifics of the soils and drainage investigations are presented in other sections of this appendix.

During reuse operations, the soil salinity within the reuse area would be higher than typically allowed in commercially irrigated areas. This is due to using higher salinity drainwater originating at commercial farmlands (conveyed by the collection system pipelines and ditches) for the irrigation supply of the reuse areas. Salt tolerant crops would use this water; however, the result would be higher salinity in both the soil and the water table under the reuse area. The soil salinity would be controlled with the use of subsurface tile drains and appropriate amounts of irrigation to help move the salts through the soil and into the tile drains. The discharge from reuse area tile drains would be conveyed to a RO water treatment plant as described in subsequent appendix sections.

Existing Reuse Facilities

The existing Northerly Area reuse facilities consist of agricultural reuse land, tile drains, reuse crops, irrigation pipeline, supplemental irrigation wells, and tailwater recirculation pumps. The districts have acquired a total of 3,803 acres of land, which are actively farmed by the districts for drainage recycling and reuse with salt tolerant crops. Only 1,677 acres of existing reuse land have installed tile

drains. Under the proposed plan, the existing facilities will be modified by installing tile drain systems (including manholes, water control valves) on all of the acquired reuse lands and by seeding and re-leveling of the reuse lands not currently being farmed.

Proposed Reuse Facilities

The proposed reuse facilities include:

- Modification of the existing reuse facilities by installing tile drains on 2,126 acres of existing undrained reuse land.

- Expansion of the existing 3,803 acres of reuse area by 4,585 acres to yield a total reuse area of 8,388 acres. The expanded area will require the installation of tile drains, water control valves, concrete manholes, land re-leveling, irrigation furrows, initial crop seeding, and furrows for tailwater discharge to existing drainage ditches.

- Reuse irrigation supply system consisting of four canal-side pumping plants (pumping plants PCC06D, PE14, PCC16D, and FC5b) with pipelines to convey drainwater from existing drainage ditches to supply irrigation water to reuse areas or directly to the RO treatment plant, and eight supplemental irrigation supply wells. Communication, supervisory control, and data acquisition (SCADA) equipment for the irrigation system are part of an integrated system that interfaces with the drainage collection system at commercial farmland sumps and the conveyance system that conveys reuse drainage to treatment and disposal features; the designs for this equipment are included in the "Conveyance System" section of this appendix. Similarly, the designs of the sumps, pumping plants, and pipelines that convey the reuse drainage to the RO treatment plant are presented in the "Conveyance System" section of this section.

Most of the existing and proposed reuse facilities and their locations are shown in figure 12.

Reuse Locations

Reuse facilities include the existing and proposed expansion areas as recommended by the Northerly Area districts. Limited field investigations in the Northerly Area were conducted on the existing reuse area, and the proposed expansion area determined that surface and subsurface soils are suitable for reuse agriculture. The existing and proposed expansion areas are described in table 6. Final designs for all reuse areas would include additional field investigation to determine more detailed soil and subsoil properties, updated expected service area inflows, and actual reuse crop acreage areas.

Table 6. Existing and proposed expansion areas for Northerly Area reuse facilities

Irrigation Subarea and Source	Existing Acres	Proposed Acres	Location
SJRIP FC5 Ditch	1,036		T. 12 S., R. 12 E., parts of Sec. 2, 3, and 10 between the Central California Irrigation District (CCID) Main Canal and the CCID Outside Canal
PE 14 East FC5 Ditch		664	T. 12 S., R. 12 E., parts of Sec. 1, 11, and 12 between CCID Main Canal and the CCID Outside Canal
SJRIP Russell Avenue Ditch and DMC Interceptor Pipeline	2,303		T. 12 S., R. 12 E., parts of Sec. 11,12,13,14; T. 12 S., R. 13 E., Sec. 17, 18; between Outside Canal and DMC
SJRIP Russell Avenue Ditch and DMC Interceptor Pipeline	464		T. 12 S., R. 12 E., part of Sec. 10 between Outside Canal and DMC
PE14 East Russell Avenue Ditch and DMC Interceptor Pipeline		211	T. 12 S., R. 12 E., part of Sec. 15 between CCID Outside Canal and DMC
East Side of Eagle Field Russell Avenue Ditch and DMC Interceptor Pipeline		620	T. 12 S., R. 12 E., Sec. 9 and 16; between Eagle Field and Russell Avenue
West of Eagle Field Russell Avenue Ditch and DMC Interceptor Pipeline		400	T. 12 S., R. 12 E., Sec. 5 and 8 immediately adjacent to west edge of Eagle Field
West of Eagle Field PO2 Ditch		760	T. 12 S., R. 12 E., Sec. 6 and 7 between Outside Canal and DMC
West of Eagle Field PO2 Ditch		570	T. 12 S., R. 11 E., Sec. 1 and 12 between Outside Canal and DMC
West of Eagle Field PO2 Ditch		750	T. 12 S., R. 11 E., Sec. 2 and 11 between Outside Canal and DMC
West of Eagle Field PO2 Ditch		610	T. 12 S., R. 11 E., Sec. 3; between Outside Canal and DMC; this acreage is not needed as crop area but is used for potential emergency storm water storage
Total Area	3,803	4,585	

Soil Investigations of the Reuse Area

Land Productivity Potential

A modified Reclamation land classification evaluation process was used to develop productivity grades for the reuse area soils. This work was to determine

if these soils are suitable for sustained plant growth using saline drainwater as the irrigation supply. An assignment of land grade for productivity was used to refine the estimated crop water use that could be expected on the reuse areas. The results of this soil evaluation are summarized in table 7.

Table 7. Reuse areas soil productivity grades

Acres					Location
Grade 1	Grade 2	Grade 3	Grade 4	Grade 6	
		3,497	588	152	Sec. 2, 3, 10, 11, 12, 13, 14, T. 11 S., R. 12 E., Sec. 17, 18, 19, T. 11 S., R. 13 E.
					Sec. 36, T. 11 S., R. 11 E., Sec. 1, T. 12 S., R. 11 E., Sec. 31, 32, 33, T. 11 S., R. 12 E., and Sec. 4, 5, 6, T. 12 S., R. 12 E.
		745	363	315	Sec. 34, 35, 36, T. 11 S., R. 11 E.
	947	363			Sec. 1, T. 12 S., R. 11 E., Sec. 6, 7, T. 12 S., R. 12 E.
	538	76		14	Sec. 34, T. 11 S., R. 11 E., Sec. 3, 4, T. 12 S., R. 11 E.
	140	869			Sec. 8, 9, 16, 17, T. 12 S., R. 12 E.
		741			Sec. 14, 15, T. 12 S., R. 12 E.
		744	95	41	Sec. 17, 19, 20, 29, 30, T. 12 S., R. 13 E.
			111	289	Sec. 11, 12, T. 12 S., R. 12 E.
	1,625	7,035	1,157	811	Sec. 33, 34, 35, T. 12 S., R. 13 E., Sec. 2, 3, 4, 8 through 16, T. 13 S., R. 13 E., and Sec. 7, 18, T. 13 S., R. 14 E.

Reuse Area Subsurface Drainage Investigations

Field data collection for subsurface drainage properties of the potential reuse areas was intended to provide onsite soils logs to at least 20 feet in depth, in-place soil permeability measurements, and estimated depth to barrier (relatively slow permeable layer) for tile drain designs. Soil layering, permeability, and depth to barrier are critical values required to estimate tile drainage depth and spacing. Without proper drainage for both water table control and salt leaching, the reuse areas would fail; and the project would not provide a long-term solution to drainage needs.

Field data collection for the Northerly Area focused on the proposed expansion area. Some additional soils information was collected on the existing SJRIP reuse area and in the proposed evaporation pond area. A total of 16 holes were drilled for the drainage investigation. A total of 33 hydraulic conductivity tests were conducted. The hydraulic conductivity tests were used to calculate a weighted hydraulic conductivity for each of the 16 holes. The depth to a relative barrier and drain spacing were also computed for each drill hole.

In summary, soils logs for deep profile descriptions were completed on about 120 locations with hydraulic conductivity tests conducted on nearly all of them. Weighted soil hydraulic conductivity (table 8) and depth to a relative barrier were determined for each soil profile. Drain spacing was calculated for each profile located in or near a reuse area. A quantity estimate for reuse area tile drainage was completed based on the drain depth and spacing required to control the water table at each reuse area.

Table 8. Hydraulic conductivity test summary for general soil types

General Soil Texture	Geometric Mean of Permeability Tests (inch per hour)
Clay	0.58
Clay Loam	0.93
Silty Clay Loam	2.35
Silty Clay	1.17
Sandy Clay Loam	4.18
Fine/Very Fine Sandy Loam	3.77
Silt Loam	3.22

Soil Leaching Factor and Evapotranspiration

The primary factor in determining the irrigation requirement for the reuse crops is leaching of salts to maintain the soil salinity within acceptable levels. A leaching factor of 27% (which corresponds to a 73% irrigation efficiency) for both commercial and reuse facilities in the project area was selected in the EIS. This factor was confirmed as a valid and feasible assumption for this study based on the results of the soils investigations, historical irrigation efficiency values (65–80%), and discussions with district personnel. The leaching factor is used to calculate the total reuse crop area needed to consume the influent drainwater.

The specific crop types and particular crop rotations have not been developed. The basis for crop water use is a mix of crops that would be equivalent to 80% of the local reference ET as reported by California Irrigation Management Information System (CIMIS) weather station sites. The operations and management of the reuse areas would need to be flexible to periodically adjust the actual crop mix, rotations, and acres planted. More emphasis on perennial plants and plants that have higher salt tolerance and greater water use rates would make the reuse area more efficient in terms of water consumption. Examples of some crops considered are tall wheatgrass, rio wild rye, salado alfalfa, bermuda grass, barley, paspalum, red gum, and some varieties of athel. Single row or multiple row tree plantings could be used as field borders to provide deeper groundwater use through their deeper root systems. Tree selection would be dependent upon salinity and boron tolerance of each individual variety.

Recent field studies on crop ET, by California State University, Fresno, have shown salt tolerant crops of tall wheatgrass, creeping wild rye, and paspalum use water at rates similar to reference ET. Measurements at RRR, where these crops were irrigated with drainwater, show ET in the range of 85 to 98% of reference ET at the CIMIS 105 site near Tranquility.

Operation and Management of Reuse Facilities

Drainwater inflow to the Northerly Area reuse facilities arrives from three existing primary open ditch sources: the Russell Avenue drain, the FC5 drain, and the PO2 drain (refer to figures 11 and 12). Flows from these three drainage ditches eventually are combined into a single ditch that exits to the north of the reuse area. The combined flows are measured at Station A along this drainage outlet. The flows at Station A are made up of tile discharge from about 48,000 acres of existing tiled land, overland runoff flow from precipitation, tailwater discharges, and some uncontrolled groundwater intercepted by the deeper sections of the open drains.

The Russell Avenue drainage ditch carries the bulk of the drainwater from irrigated land to the south. This drain provides the bulk of the inflow to the eastern part of the reuse area and is also the major part of the flow measured at the PE 14 measuring site, which is located in the Bypass Canal and measures flows contributed by both the Russell Avenue ditch and the PO2 ditch.

The FC5 drainage ditch along the south side of the Main Canal carries drainwater from the east/southeast areas such as Firebaugh Canal Water District, Camp 13 Drainage Area, and Broadview Water District area. Flows in this open drain are measured at location FC5 and contribute to the flows measured at Station A.

The PO2 drainage ditch along the south side of the Outside Canal carries drainwater from the west (Charleston Drainage District and Pacheco Water District areas). Flows in this open drain are measured at location PO2, which is also a component of the flow measured at Station PE14.

The percentages of flow contribution at Station A from each of the three tributary drains were developed from flow measurements recorded at Station A, PE14, PO2, and FC5 and are shown in table 9 (data provided by Summers Engineering, Inc.). The breakdown of the individual contributions of these three major inflows to Station A would require more verification and refinement for final design. The variation in flows reflects the variation of the sources contributing to the drainage ditches.

Reuse Irrigation

Design inflow percentages used to determine irrigation routing are shown in table 9. Three general areas of reuse are matched to the three drainage ditch sources. The Russell Avenue percentage is calculated as the difference between the PE14 and PO2 measurements. The land between the Central California Irrigation District (CCID) Main Canal and the CCID.

Table 9. Ditch contribution to Station A flow

	Percent of Station A Flow		
Month	Russell Avenue	FC5	PO2
January	60	12	28
February	49	37	14
March	48	29	23
April	43	32	25
May	43	38	19
June	37	43	20
July	41	44	15
August	34	41	25
September	10	41	49
October	30	30	40
November	45	15	40
December	52	14	34

Outside Canal would be associated with flows at FC5. All areas east of Eagle Field, between the Outside Canal and the DMC, including Section 8 immediately west of Eagle Field, would be associated with the flows along Russell Avenue (also called PE14 East as it is the portion of PE14 measured flow that arrives from the east side of the area). All areas west of Eagle Field, with the exception of Section 8 on the immediate west side of Eagle Field, would be associated with the flows represented by PO2 (the PO2 contribution to measured PE14 flow arrives from the west side of the area).

Canal side pumping plants are sized to remove the flows shown in table 10 from the open drainage ditches.

An example of the design parameters to determine the crop irrigation requirements and the associated pumping plant sizes is shown in table 11.

The goal of the drainage reuse facilities for the Northerly Area is to eliminate discharges to the San Luis Drain in most cases except for larger, storm related, runoff-discharge events. Since the drainage flow is primarily by open ditch gravity flow collector drains, there is very little opportunity to control the discharge and flow variations. The drainage water contains a significant selenium component; therefore, regulating reservoirs are not considered viable at this time.

Consequently, the drainage flow must be managed daily through reuse crop irrigation, reuse area groundwater storage, or directly bypassing the flows to the treatment plants.

Table 10. Flows in Russell Avenue, FC5 and PO2 ditches

Ditch Flow	Russell Avenue	FC5	PO2
2003 Maximum Day Supply (acre-feet per day [acre-ft/day])	64.69	51.63	35.23
2003 Average Daily Supply (acre-ft/day)	22.82	21.46	13.59
2003 Annual Supply (acre-ft)	10,485	8,830	6,070
2004 Maximum Day Supply (acre-ft/day)	97.73	73.45	37.63
2004 Average Daily Supply (acre-ft/day)	23.91	22.03	13.83
2004 Annual Supply (acre-ft)	10,655	8,835	6,125

Table 11. Irrigation design parameters for Section 9, between Eagle Field and Russell Avenue—620 acres

Chateau Clay	5.32	Inches Water Holding Capacity
Permeability (Infiltration Rate)	.06 – 0.2	Inch per hour (in/hr) (Natural Resource Conservation Service)
Soil Infiltration Rate	0.13	In/hr average
Managed Allowable Depletion	50%	
Available Water Capacity (AWC)	2.66	In
Maximum Day Crop Water Use	0.29	Inch per day (in/day)Class 3
Crop Water Deficit (AWC)	0.22	Acre-ft per acre (acre-ft/acre)
Irrigation Efficiency	0.73	
Required Application	0.30	Acre-ft/day
Irrigation Set Time	1.17	Days (Class 3 productivity)
Required Application Time	9	Days
Irrigation Set Area	80	Acres
Supply Pump Rate	20.92	Acre-ft/day
Design Pumping Rate[1]	41.8	Acre-ft/day

[1] Design pumping rate is twice the supply rate to provide irrigation scheduling flexibility.

A flow management scenario was developed and modeled using Station A flow records for years 2003–2004. The modeling results indicate that reuse area designs, operations, and flow management techniques provide adequate capacity to manage the flow variations without exceeding the overall system capacity for this inflow scenario. It is expected, however, that the capacity of the reuse facilities and treatment plants will occasionally be exceeded during periods of high precipitation. During these periods, earthen ditch plugs will be breached to temporarily permit drainage discharge through the Grasslands Bypass Channel, to the San Luis Drain, flooding nearby farmlands as is currently the case with the

existing facilities. It is not the goal of the Federal drainage service to prevent this from happening in the future. A hydrologic analysis was not performed to assess the interaction of farming practices and climatic conditions which would produce flows exceeding drainage service capacity nor the frequency and magnitude with which they would occur.

The available flow records for Station A, FC5, PE14, and PO2 show fairly significant daily fluctuations. Figure 13 shows the flow pattern at Station A from 1996 through 2004. It is evident from this figure that crop irrigation requirements are not matched with drainwater flows during much of the year. There are periods when drainwater inflows exceed reuse irrigation demands and when these inflows are substantially less than needed for irrigating reuse crops. This imbalance between available drainwater and reuse irrigation requirements is addressed through a combination of reuse bypass, supplemental well supplies, and reuse subsurface storage.

Supplemental Reuse Irrigation Supply Wells

As shown in figure 13, there is a shortage of inflows to fully meet crop ET requirements during May through October. A supplemental irrigation water supply is provided to meet 50% of the predicted irrigation shortage. It is assumed that eight new irrigation wells will be required to meet this shortage based on the flow management model using 2003–2004 flow data. This supplemental irrigation supply is included to prevent crop loss when drainwater supplies are inadequate to maintain crop viability.

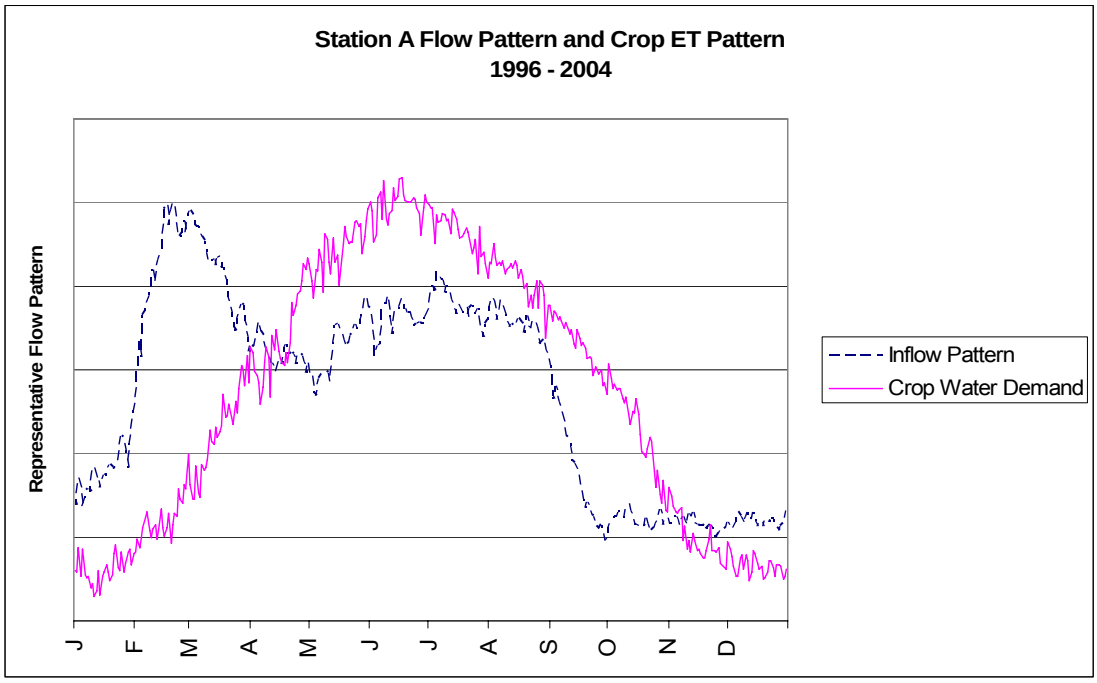

Figure 13. Average Station A flow pattern and crop ET pattern from 1996–2004.

The two existing supplemental irrigation wells pump groundwater from above the Corcoran Clay. The proposed eight new wells are assumed to be generally the same and, for cost estimating purposes, are considered to be 400 feet total depth, 100 feet of well screen, 16-inch diameter casing, 28-inch diameter bore, gravel pack from 50-400 feet, 200-horsepower electric motor, pumping capacity 2,000-2,500 gallons per minute (gpm). Subsequent contribution to drainage flow from application of supplemental water on reuse crops is included in the reuse tile drain discharge flow estimates.

Reuse Irrigation Bypass Flows

The expanded reuse area will not have sufficient capacity to accommodate 100% of the drainwater flows from the collection system during periods of low ET or high precipitation (especially during winter months). A portion of the drainwater flow will bypass the reuse facilities and be conveyed directly to RO treatment when the irrigation demand of the reuse area is exceeded. A majority of the January, February, and March flows can potentially bypass reuse and go directly to the RO treatment plant. Figure 14 shows the timing and amounts of estimated bypass to RO treatment for the years 2003-2004 reuse operation scenario.

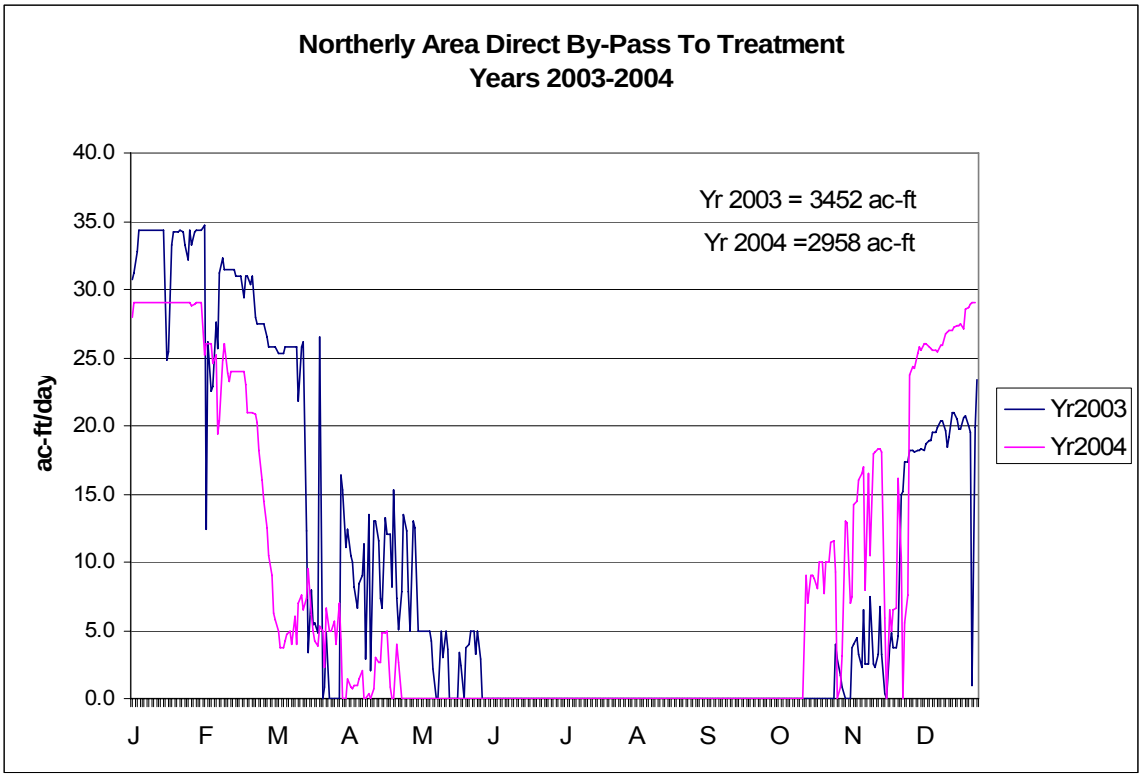

Figure 14. Estimated reuse bypass flows to treatment for years 2003-2004 modeling scenario.

Drainwater bypass of the reuse areas will be accomplished using canal side pumping plants PE14 and FC5a. Any drainwater not withdrawn from the Russell Avenue ditch will flow along the south side of the Outside Canal to a point close to the RO treatment plant site. At this location, the canal side PE14 pumping plant will bypass the reuse area and convey the drainwater directly to the RO treatment plant. A portion of the PO2 ditch would need to be re-graded to permit gravity flow to the PE14 pumping plant. Final treatment plant location may be moved farther west to eliminate this re-grading issue.

Bypass flow originating from the FC5a location will be pumped through a pipeline to the RO treatment plant via a regulating tank at the intersection of Russell Ave and the CCID Outside Canal. At the regulating tank, the FC5a bypass drainwater will be combined with drainwater discharge from reuse areas.

Reuse Subsurface Storage and Controlled Drainage Discharge

Reuse flows in excess of the treatment plant capacity would be spread on the reuse area to the extent possible without ponding of water. The volume of water spread on the land in the winter months is not reduced by crop ET and merely infiltrates to the groundwater below the reuse area where it is stored until adequate downstream treatment capacity is available later in the year.

A reuse area that is sized to contain the flows of the years 2003–2004 results in a crop area of 6,628 acres and a fallow area of 1,680 acres used to store excess flows. The excess flows would be applied to the fallow land in similar fashion to other reuse areas during winter months and infiltrate to the shallow groundwater for temporary storage until adequate treatment capacity is available in the following spring and summer months. Reuse drainage discharge will be controlled using valves. The fallow area will be planted as needed for crop rotation. The planted area, 6,628 acres, may require supplemental irrigation to remain viable from year to year.

Due to the need for groundwater storage and associated timely release through the tile system, the Northerly Reuse Area tile spacings are closer than they normally would be to handle irrigation-induced drainage only. Extra depth is not required, and the drain depth is an average 8 feet from ground surface. The narrow drain spacings allow for rapid removal of stored water when necessary to provide room for winter or summer irrigation deep percolations. Tile drains feed into larger collector pipes that convey subsurface drainage by gravity to eight different reuse sumps. The tile drainage systems feeding into each reuse sump would have discharge valve control and would require management decisions about when and how much to discharge from each tile sump. The decisions on discharge would be based on the available RO treatment plant capacity and the depth to the water table under the reuse field. The designs for the reuse tile sumps and pumping plants are presented in the “Conveyance System” section of this appendix.

The Northerly Area districts have been successfully managing subsurface storage, water table elevation, and drainage discharge flows from their reuse facilities since 2002. The management and control are accomplished using 15 DOS-IR valves installed on collector drains across 930 acres in the existing reuse areas, which provide one valve per 62 drained acres. The proposed expansion area would substantially increase this level of control by installing two DOS-IR valves on each spaced drain—one at the midpoint of its length and the other at the downstream end where it connects to the collector drain, which would provide one valve per 13 drained acres.

The hydrologic model for the 2003–2004 flow data includes transient drainage equations for DOS-IR valve operation to manage subsurface storage and water table elevation. Selected tile drain design parameters used in the model are presented in table 12; refer to figure 12 for subarea locations.

The existing SJRIP area has approximately 1,680 acres of existing tiled reuse area. The drain spacings throughout this area are varied; therefore, an area weighted average spacing was used for calculating the water table response and drainage flow from this area. The existing tile sumps discharge into a surface ditch which flows west and would be pumped from the ditch (using the FC5a pumping plant) into the conveyance system pipeline to the downstream Regulating Tank No. 3.

Table 12. Reuse tile drain spacings, sumps, and estimated drainage discharge flows

Sump Number/Subarea	Acreage (acres)	Drain spacing (ft)	Maximum discharge (cfs)
WCC03B/ Sections 2 and 3 Between Outside and Main Canals (Existing SJRIP)	1,700	300	13.1
WCC11D/existing SJRIP	2,363	200	13.15
WCC10B/existing SJRIP	675	300	4.1
WCC09A/east side of Eagle Field	620	400	4.65
WCC06D/west side of Eagle Field	1,160	300	9.65
WCC01C/west of Eagle Field	570	300	12.7
WCC02A/west of Eagle Field	750	300	15.9
WCC03A/far west end; temporary use	610	300	8.9

The exact response of the water table cannot be predicted for the entire Northerly Area. More field data on the subsoil physical properties and irrigation management would be required for final design. For this feasibility estimate, the application of water, based on containing the Station A years 2003 and 2004 record of flow, was used. The application of water could only be generalized to fit the entire reuse area since operators of the area can decide which particular

fields to water and which ones to leave dry or fallow. The water table responses for two reuse subareas using the 2003–2004 flow management scenario are shown in figures 15 and 16. The intent of the flow management model is to maintain the water table within about 4 feet above the tile drain piping.

The proposed scheme for reuse operations and flow management using subsurface storage and controlled drainage discharge is deemed feasible and practical based on the local historical success of this approach, the proposed increase in DOS-IR control valves, and the satisfactory results predicted by the hydrologic model.

The modeling results for the reuse management techniques described above are summarized in table 13, which shows the total reuse inflows (irrigation drainwater plus water from supplemental irrigation wells), reuse volume reduction through ET (based on the 27% soil leaching factor), and the total reuse outflows (reuse drainwater plus direct bypass flows) for the design model simulation years of 2003–2004.

Table 13. Model summary of reuse inflow, volume reduction, and outflow

Reuse Facilities Modeling Simulation	Water Inflow, Drainwater Plus Supplemental Irrigation Water (acre-ft)	Water Outflow, Tile Discharge Plus Direct Bypass Flow (acre-ft)	Reuse Volume Reduction (acre-ft)
Year 2003	31,935	11,263	20,642
Year 2004	32,670	11,740	20,930

Reuse of RO Treatment Plant Backwash

Reuse Backwash Cell Design

The RO treatment plant would receive water from the reuse tile drains as well as some ditch water that bypasses the reuse areas in the winter months. The bypassed water is a combination of on-farm tile discharge as well as surface runoff. This water is expected to have a sediment load that is much higher than tile water, so prefilters have been included in the RO designs. The prefilters would collect the sediment particles and occasionally need to be back washed to flush the collected sediment out of the filter media. The proposed disposal of the backwash water is to be in unlined earth cells that would contain the sediment and infiltrate the water.

A total of 80 acres immediately west of the existing sewage disposal cells on Eagle Field would be dedicated to these infiltration cells. The 80 acres would be divided into eight cells (figure 17) that would receive water in a rotation cycle.

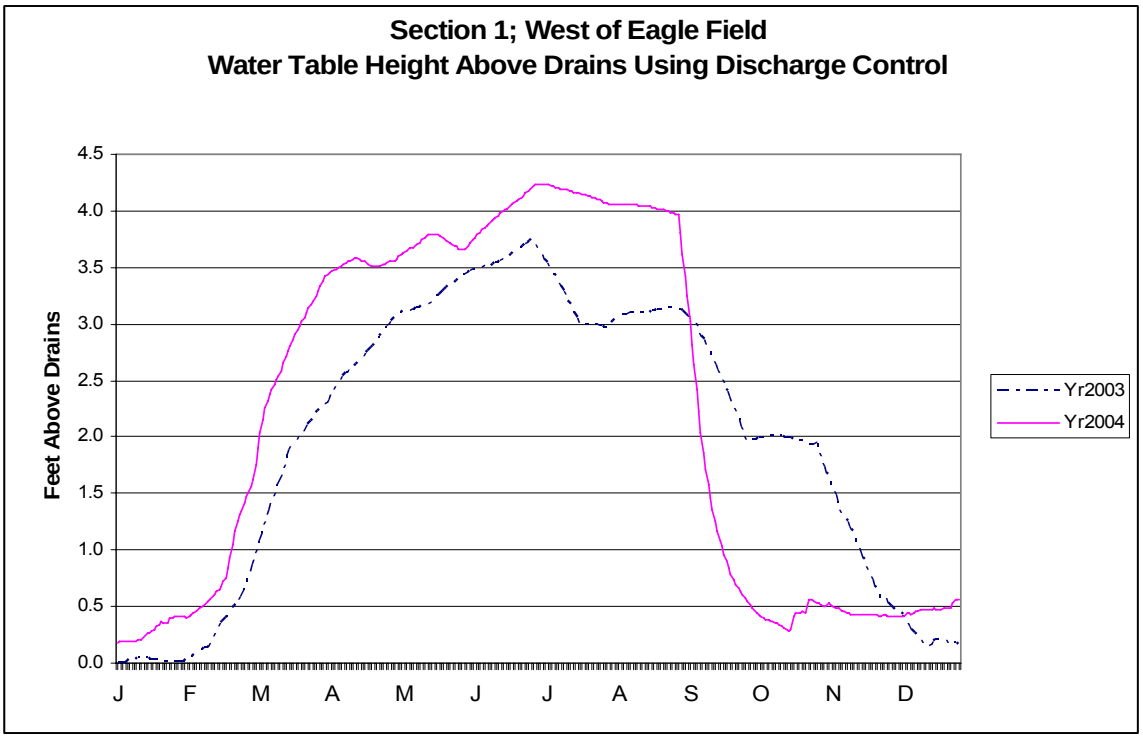

Figure 15. Reuse water table height above drains modeled for Section 1, west of Eagle Field.

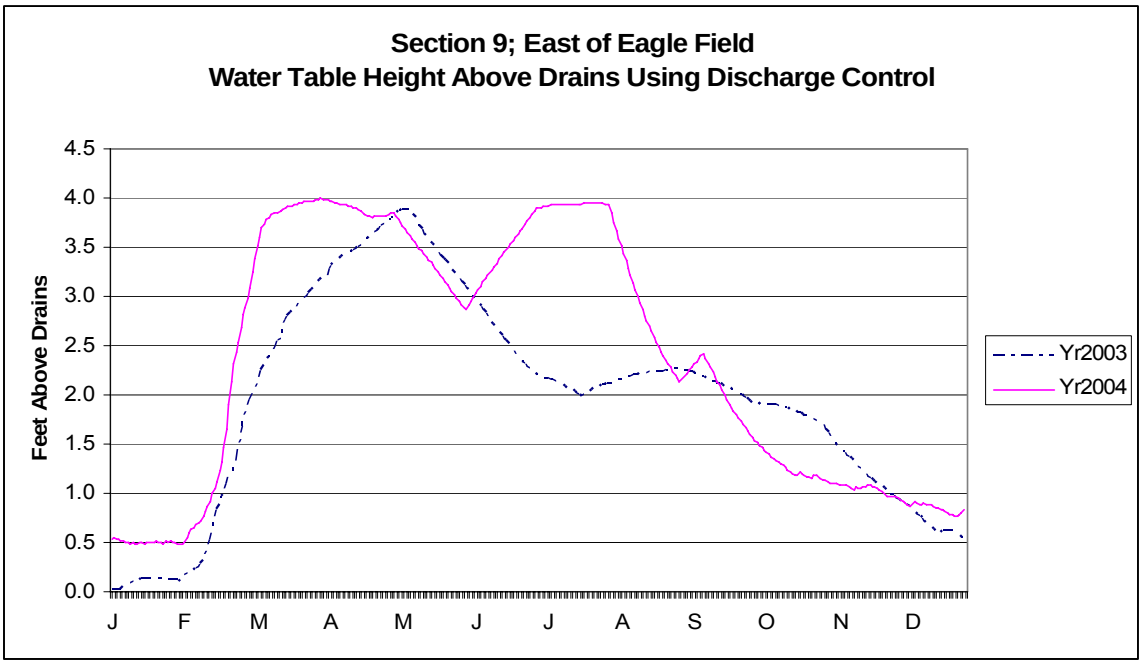

Figure 16. Reuse water table height above drains modeled for Section 9, east of Eagle Field.

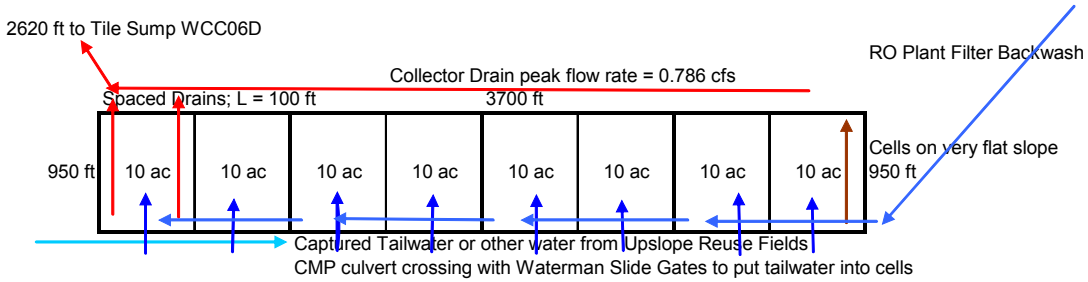

Figure 17. Design of the 80-acre reuse cell for RO backwash disposal.

Currently, the prefilter design estimate assumes backwash would be required every 3 days. Using all eight infiltration cells, each cell would receive water once every 24 days.

The eight cells would be constructed with a very flat slope (from south to north) and be separated by 1- to 2-feet-high earth dike/borders. The earth borders around the entire perimeter would have an 8-foot top width and gravel surfacing for operation and maintenance (O&M) vehicle access. Every other interior earth border would also be an 8-foot top width for maintenance vehicle access, so that at least one side of every cell would require a graveled access road. The other interior borders would have a 4-foot top width with no special surfacing. All earthwork for the dike/borders is considered to be compacted, although being water tight is not a requirement. Earth fill material to construct the border dikes is assumed to be readily available, either locally or from the cell leveling process.

The expected backwash volume of 770,000 gallons produced in approximately 90 minutes results in a flow rate of 19.5 cfs. The backwash volume would be pumped into one of the 10-acre cells and allowed to infiltrate or be used by plant vegetation. This volume of water represents an irrigation application of 2.8 inches over the entire 10-acre cell. The soils in this area are Chateau Clay, with infiltration rates between 0.06 inch per hour and 0.20 inch per hour. Using an average infiltration rate of 0.1 inch per hour, it would take about 28 hours for each backwash volume to completely infiltrate over the 10 acres. The rotation of the cells in use can be adjusted as operational procedures are refined. Final designs may not require as many individual cells. Onsite soil infiltration rates and subsurface permeability measurements are needed to refine this estimate. Final designs need to include an estimate of the chemical constituents of the winter flow water and sediments expected in the RO plant prefilter.

The tile drain discharge from this area would be connected by buried pipeline to the tile sump WCC06D. This tile sump has a design peak capacity of 9.65 cfs. The addition of tile drain discharge from the backwash cells is easily accommodated within this peak capacity. Backwash cells would generate tile discharge during the winter months, and reuse area tile drains served by pumping plant WCC06D would generate more water during the summer months.

Backwash Cell Operation

Each cell is assumed to have some type of perennial vegetation cover, so there would be some ET use of the backwash water. Water not consumed by vegetation ET would be directly added to the water table and would need to be controlled and discharged by the subsurface drains. Reference ET and daily rainfall, from the year 2003-2004 CIMIS data, has been used to estimate the amount of water that would end up in the water table. Since bypass water occurs only in the winter months, prefilters only need to be backwashed in the winter months. Very little vegetation ET is available in the winter months; so for years 2003 and 2004, approximately 85 and 92% of the backwash water flows into the tile drains and is returned to the treatment plant through tile sump WCC06D.

The vegetation on the backwash cells is assumed to be in place to consume some water and limit exposure of the water to wildlife. If the vegetation is to remain active, additional irrigation water would be needed when backwash water is not provided (during the summer). It is assumed that the regular reuse water, or reuse tailwater, can be recycled as needed during the summer months for this purpose. A tailwater style of ditch (shallow and gently sloping) would be constructed along the upper ends of the cells and at the outside toe of the cells' border dike.

Backwash cell tailwater would be returned into the upper end of the cells by a simple culvert crossing under the cell border dike with a Waterman style slide gate on the inlet of the culvert. The culvert can be either corrugated metal pipe or concrete pipe, depending upon the amount of cover available. The culvert is assumed to be 12 inches in diameter for all cells. The backwash cells have the advantage of being located at the low end of Section 8 and also at the end of the PO2 ditch and near the end of the Cambria drain, so any excess supply water or tailwater should be easily available when needed. A small tailwater style of pump may be needed, depending upon grades, to return the tailwater into the backwash cells.

Reuse Irrigation and Canal-Side Pumping Plants Design Summary

Four new canal-side pumping plants would be constructed to remove drainage from existing drainage ditches/canals. These four pumping plants would serve both the irrigation needs of the reuse crops and the off-season diversions for winter storage when needed. Pumps are designed to provide at least 1 foot of head above ground surface at the delivery point in the reuse areas, which is adequate for irrigation distribution. Designs for the reuse tile drain sumps, pumping plants, and conveyance pipelines to treatment facilities are presented in the "Conveyance System" section of this appendix.

Pumping plant PCC16D would remove drainage flows from the Russell Avenue ditch; pipelines would convey these flows to reuse areas PE8 and PE9. Pumping plant PCC06D would remove drainage flows from the PO2 ditch, and pipelines would convey these flows to reuse areas PO1, PO2, PO3, and PO6. Pumping

plant FC5 would remove drainage flows from the FC5 ditch, and pipelines would either convey these flows to reuse areas FC5(1), FC5(2), and FC5(3) or bypass directly to the RO treatment plant (via Regulating Tank No. 3). Pumping plant PE14 would remove drainage from the Russell Avenue ditch downstream of the PCC16D pumping plant when the ditch flows exceed the reuse irrigation/storage capacity. The flows from pumping plant PE14 would bypass the reuse areas and be conveyed by pipeline directly to the RO treatment plant (via Regulating Tank No. 2). Locations of irrigation pumping plants and pipelines that distribute flows to the reuse areas are shown in figure 12. A summary of pump and pipeline design parameters is shown in table 14.

Pipelines

Pipelines convey irrigation drainwater from the pumping plants to the high point in each reuse subarea. Pipelines are HDPE, and construction is similar to that described in the collector pipeline section; except that pipelines buried under reuse fields require a minimum cover of 5 feet, and surge pressures from pumping units require air chambers. Additionally, the backfill above the reuse pipelines are compacted to 85% Proctor to minimize potential subsidence due to farming operations. The approximate total length of HDPE irrigation pipeline is approximately 51,000 feet. Gated aluminum irrigation pipe would distribute irrigation water from the terminus of HDPE supply pipes to open surface within each irrigation subarea. Connections between the HDPE and aluminum pipes would have valve control. Approximately 180,000 feet of aluminum irrigation pipe would be installed in the reuse areas.

Drainage Ditch Fuse Plugs

During the infrequent occasions when ditch flows exceed the drainage service capacity (i.e., reuse, reuse bypass, and treatment), excess drainwater flows require a mechanism to exit the drainage system in the manner that they currently do (i.e., through the Grasslands Bypass project). For this purpose, fuse plugs would be installed just downstream from the PCC06D (in the Grasslands Bypass ditch) and FC-5 pumping plants to permit excess flows to discharge into the drainage system. The quantities for these fuse plugs are not included in the designs and cost estimates, as it is assumed that a small portion of the waste material from the treatment plant or pumping plants foundation could be utilized for this purpose.

Pump and Unit Piping Selection

Reclamation materials engineers evaluated current and projected drainage water quality reports and prepared a list of recommended pump materials—the least expensive being stainless steel as well as a recommendation to not use graphite impregnated packing. Based on the evaluation, enamel-coated cast iron bowls with stainless steel impellers were selected. During final design, less expensive impeller material would be evaluated to use on this project.

Variable-frequency drives (VFDs) were used on all the pumps in the canal-side pumping plants. It was assumed that the speed of each individual pump could be

Table 14. Pump and pipeline design parameters for Northerly Area reuse irrigation system

	Inlet								Pipeline			Outlet				
				At Pump												
Collection Water Source	Pump Location	G.S. Elev. (ft)	W.S. Below G.S. (ft)	Static Head (ft)	TDH (ft)	Flow (ft^3/s)	*Initial* BHP (HP/ea)	Air Chamber Dia x H (ft x ft)	Nom. Dia. (in)	Length (ft)	Flow (cfs)	Reach Terminus	Discharge Outlet	G.S. Elev. (ft)	Approx. W.S. Above G.S. (ft)	Comments
Surface water	PCC16D	161	5	6	7.0	2.0	*2.1*	15x15	36	9,240	Varies along pipeline	Fields 8 and 9	Gated delivery pipe	161	1	Min. flow for pumping plant
					16.0	7.0	*17.1*									Min. flow in field 8 (1 part)
					20.0	14.0	*42.8*									Max. flow in field 8 (2 parts)
					16.0	10.6	*25.9*									Min. flow in field 9 (1 part)
					18.0	21.2	*58.3*									Max. flow in field 9 (2 parts)
					30.0	26.3	*120.5*									Max. flow for pumping plant
Surface water	FC5a (to treatment only)	135	5	43	44.0	2.0	*13.4*	15x15	24	6,028	2.0	TCC09A	Regulating tank #3	148	25	Min. flow, only pump station running
					47.0	6.6	*47.4*				6.6					Max. flow, only pump station running
					45.0	2.0	*13.7*				4.0					Min. flow in both stations running
					63.0	2.0	*19.2*				15.1					Min. flow, max flow in other station
					76.0	6.6	*76.6*				19.7					Max. flow in both stations running
Surface water	FC5b (to irrigation only)	135	5	19	20.0	2.0	*6.1*	15x15	36	18,480	Varies along pipeline	Fields 3,2, and 1	Gated delivery pipe	148	1	Min. flow for pumping plant
					37.0	6.6	*37.3*									Min. flow in field 2 (1 part)
					44.0	13.2	*88.7*									Max. flow in field 2 (2 parts)
					31.0	11.0	*52.1*									Min. flow in field 3 (1 part)
					36.0	22.0	*121.0*									Max. flow in field 3 (2 parts)
					40.0	11.3	*69.0*									Min. flow in field + (1 part)
					52.0	22.6	*179.5*									Max. flow in field + (2 parts)
					57.0	27.5	*239.4*									Max. flow for pumping plant
Surface water	PCC06D	148	5	19	20.0	2.0	*6.1*	15x15	36	23,760	Varies along pipeline	Fields 3,2,1, and 6	Gated delivery pipe	161	1	Min. flow for pumping plant
					33.0	10.0	*50.4*									Min. flow in field 3 (1 part)
					44.0	19.0	*127.7*									Max. flow in field 3 (2 parts)
					41.0	13.0	*81.4*									Min. flow in field 2 (1 part)
					41.0	19.0	*119.0*									Max. flow in field 2 (2 parts)
					31.0	10.0	*47.3*									Min. flow in field 1 (1 part)
					38.0	19.0	*110.3*									Max. flow in field 1 (2 parts)
					37.0	13.0	*73.5*									Min. flow in field 6 (1 part)
					34.0	19.0	*98.7*									Max. flow in field 6 (2 parts)
					44.0	19.0	*127.7*									Max. flow for pumping plant
Surface water	PE14	148	8	23	23.0	15.1	*53.0*	None	24	100	15.1	WCC05D	Regulating tank #2	148	15	Max. flow
					23.0	2.0	*7.0*				0.0					Min. flow

reduced to provide a range of flows from 100% (rated) to 60%. The flow range would be verified with pump suppliers during final design and adjusted as required. Pumps were selected to meet the pumping plant requirements, including a 5% margin for wear. All of the pumps are mounted over a conventional wet sump concrete intake structure.

The unit and manifold piping for each of the pumping units is steel and is sized for a maximum velocity of 10 feet per second to minimize friction losses.

The air chambers would be designed and constructed in accordance with American Society of Mechanical Engineers (ASME) Boiler and Pressure Vessel Code.

Typical spare pump parts, such as pump bearings, lineshaft bearings, motor bearings, wear rings, gaskets, and seals, would be provided to expedite pump repairs should the need arise.

Pumping Plants PCC16D, PCC06D, and PE14

One typical plant layout was developed for these three pumping plants, which would provide conservative pumping plant sizes and associated costs. A more detailed design for each of the various size pumping plants would be completed during the final design phase of this project, as required.

Each of the pumping plants consists of four vertical turbine pumps with VFDs. Four different sized pumps with VFDs were needed to pump from 27.6 to 3.0 cfs, including any flow within the range. The rated flows for the pumps are 27.6, 16.5, 9.8, and 5.1 cfs, respectively. Only one pump per pumping plant would be operated at any time.

If the minimum allowable flow of 3.0 cfs can be increased, the number of pumps at each pumping plant can be reduced from four pumps to three pumps.

During final design, utilizing three pumps per pumping plant would be evaluated.

Pumping Plant FC5

The FC5 pumping plant consists of two FC5a pumps and four FC5b pumps. The four FC5b pumps supply water to reuse areas, while the two FC5a pumps bypass flow around the reuse areas when the total flow from the FC5 pumping plant exceeds the reuse area irrigation capacity.

FC5a Pumps. The FC5a pumps consist of two identical vertical turbine pumps with VFDs. The pumps would operate individually or together to pump from 6.9 to 1.3 cfs, including any flow between the range. The rated flow for each of the two pumps is 3.5 cfs per pump.

Instead of using two identical pumps, two different sized pumps were also evaluated with the larger pump capable of pumping from 6.9 to 4.0 cfs. At lower

flows, the smaller pump would be operated. While the efficiency of two different sized pumps was slightly higher, two identical sized pumps were selected because the equipment and construction cost of two identical sized pumps was lower.

FC5b Pumps. The FC5b pumps consist of four different sized vertical turbine pumps with VFDs. Four pumps were needed to pump from 28.9 to 2.6 cfs, including any flow within the range. The rated flows for the pumps are: 28.9, 17.2, 10.3, and 6.0 cfs, respectively. Only one pump per pumping plant would be operated at any time.

If the minimum allowable flow of 2.6 cfs can be increased, the number of pumps at each pumping plant can be reduced from four pumps to three pumps. During final design, utilizing three pumps per pumping plant would be evaluated.

A second option that would be evaluated is utilizing two identical pumps instead of two different sized pumps for the two largest pumps. Utilizing this pump combination could slightly reduce the sump depth, the cost of pump motors, and cost of the VFDs.

Structural and Architectural Design

The Northerly Area pumping plants located at drainage canals have multiple pumps with the pump column and bell housed in an open sump below a concrete slab. The power source to the plant sites is electricity from the local power grid. Motor voltage power would be provided via a small pad-mounted transformer located within the service yard. (See drawings 805-D-10404 and 10406.)

The pumping plant sites are located adjacent to open surface drains and lift water to the nearby treatment facilities or the irrigated reuse fields. Water is supplied to the pumping plant sump by the open drain and would contain trash, aquatic growth, and silt. The plants have an intake structure with a trash rack, entry diffuser wall, stoplog slot, and a traveling waterscreen to reduce the impact of the water quality on the pumping operations. The pumped water quality is considered corrosive to metals, and adequate concrete cover would be necessary for steel reinforcement. A cathodic protection system is not considered for feasibility design and may be considered in final design.

The service yard is sized to accommodate the pumping plant, an air chamber (when required), and vehicle access for O&M. The yard is delineated and protected by a 7-foot-high fence with two access points consisting of a 20-foot-wide double gate entry. The service yard is surfaced with 6-inch-deep gravel. The soil at the pumping plant sites provides little support when saturated and may require further remediation to accommodate wheel loads in subsequent designs.

Service yard drainage would be provided by sloping the finished yard away from the pumping plant or other features located within the service yard. The finished yard surface would match the existing ground elevation along the perimeter of the service yard.

A reinforced concrete masonry unit wall is provided on the plant deck as a noise and visual barrier and bullet protection to the equipment. The plant equipment is self-contained for dust and moisture protection and cooling (when required). The plant deck slab is sized to accommodate the mechanical and electrical equipment and spaced to provide operating and safety clearances. The dimensions for equipment used in the depicted layouts are estimated. (See drawings 805-D-10405 and 10407.)

The plants are outdoor type; and the intake structure, plant slab deck, discharge pipe encasement, and the open sump are constructed with cast-in-place reinforced concrete. A sunshade is required to limit the heat exposure of the plant deck. The sunshade has a removable roof section for access to the pump units. The plants are unmanned and are remotely controlled; therefore, no toilet or office areas or tool area for maintenance and repair are provided. Cranes and other lifting devices are not installed at the pumping plants. All equipment handling would be provided by a mobile crane or portable hoisting equipment.

Operation of the pump delivery system may raise the groundwater at the pumping plant sites because of reuse area irrigation, and irrigation drainage. The designs for the structural foundations would account for this anticipated rise in the groundwater elevation.

Foundation Conditions

The use of native materials as compacted structural backfill is not uncommon in this area. Only the few areas of high plastic index soils would exclude the native soils from being utilized as backfill material. Even so, lean to sandy-lean clay material of acceptable plastic index would be available from wasted soils at adjacent excavations given the size and scope of this project. It is appropriate for feasibility level design, that native soils be utilized as structural backfill for the proposed pumping plant structures (and water treatment facilities). It is anticipated that soils may require moisture content conditioning prior to placement to meet Reclamation's structural backfill compaction requirements.

The issue of differential settlement or expansive soils is of concern to all structures of this project. It is not practical to assume that structural foundation treatments alone will adequately address the issue. Even with over-excavation and replacement of foundation materials differential movements can be expected. The region as a whole is prone to differential ground movement. Smaller structures should be designed to provide their own internal stiffness and anticipate differential movements of the foundation. The larger structures are designed to be founded on deep pile foundations; however, some differential foundation movement should be assumed.

Structures should be designed with the assumption of floating foundations and should account for differential movement by liberal use of over-excavation, compaction, and limited slip-pipe couplings that allow for movement or rotation

between points of connection. Removal and replacement of excavated foundation material will not solely solve the issue of differential settlement or expansive soils. In general, the pumping plant structures will be lighter then the material removed. Preconsolidating the base soils may not be required. Preconsolidation may produce rebound that could be detrimental to the structure.

Foundation designs and using excavated soils for structural backfill should be reviewed as more site-specific subsurface geologic data is collected during final design. Foundation pretreatment assumptions should be reviewed in the final design effort. The current assumed 2:1 excavation cut slopes are appropriate for feasibility level design but should also be reviewed at final design.

Open cut excavation is used for the plant sumps and is likely to be used for the intake pipeline within the plant service yard. The open area excavations have 2:1 cut slopes (horizontal:vertical). The foundation backfill compaction improves the soil's bearing capacity, reduces vibration induced settlement, and reduces the potential for consolidation during seismic events.

Construction Considerations

Excavation for the pumping plant sump and the intake pipeline would require dewatering and unwatering during construction to ensure adequate soil compaction and provide some consolidation of the surrounding in situ soil. The groundwater is estimated to be approximately 8 feet below the existing ground surface at all the pumping plant sites.

Vacuum systems such as well points may not be effective in fat clays. Using well points is only one option that was estimated. Dewatering excavations will be difficult at best. The majority of the soils are lean to sandy-lean clays. There are areas of fat clays, but even these fat clays have a higher permeability than what would be expected. The soils have a very low density as well as a fabric of micro fractures that correspondingly increase the transmissivity of the soil. This is evident by both the productivity of the land being farmed and the results of the subsurface field permeability testing as documented. The purpose of well points would be to induce downward drainage to reduce pore pressures within an excavated slope.

All common excavations below groundwater will be difficult due to the general soil conditions of the area. The feasibility level costs were conservatively estimated to reflect this difficulty and the uncertainty of not knowing the soil properties at the precise excavation locations. Although not shown on the design drawings, cost estimates assume placement of a "French drain" system of slotted pipe and a 12-inch layer of gravel across the base of all excavations below the groundwater table for structures such as pumping plants. At best, the low-density, saturated, lean to fat clays will be a muddy mess. These construction difficulties would be exacerbated during the winter rainy season; construction schedules should take this into account. The placement of firm, free-draining gravel will

facilitate placement of concrete slabs as well as facilitate the removal of surface water during the construction effort.

Electrical Power Supply and Equipment

Incoming Power Supply and Distribution Equipment
The local electrical utility would bring in the power lines to each plant. Transmission lines bringing power to the pumping plants are described in attachment 3 of this appendix. Transmission lines would transfer power to a power pole with a fused disconnect and arrester mounted on the power pole. From there, either a pole-mounted transformer or pad type transformer would be connected.

The power requirements were determined by total pump sizes and plant load requirements. Plant loads are estimated considering a maximum load of everything powered on. Power requirements and plant load factors should be re-evaluated during final design.

Assumptions:

- The utility would provide all power needed at the voltage of 12.47 kilovolts (kV), effectively grounded for each plant.
- The power company would install any revenue metering required for power consumption billing purposes.
- The Government would provide poles, fused disconnect and arresters, and a transformer for each plant.

Incoming power to each pumping plant site would be 480 volts, three-phase. The 480-volt incoming power would be brought into a meter base and service disconnect switch and then would continue on to a 480-volt distribution panel board or motor control center which would service plant loads. A combination transformer and load center would be provided to service 240/120-volt power to service lighting, receptacles, and other low voltage plant loads.

Control Equipment
The multi-unit plants would use a motor control center (MCC) and VFD for starting and operating the variable speed pumps. The MCC would contain the standard equipment including combination motor starters, control power transformers, selector switches, pushbuttons, and unit protective and control devices. The MCC would also have motor starters and control equipment for air chamber equipment. The electrical power distribution diagrams for pumping plant FC5a/b are shown on drawings 805-D-10428 and 805-D-10429. A typical single-line drawing shows the electrical power distribution for pumping plants PCC16D, PCC06D, and PE14. (See drawing 805-D-10430.)

Adjacent to the control equipment is a SCADA cabinet which would provide start/stop signals for the pumping units. The SCADA system provides automatic operation of the pumping units based on flow requirements and system conditions. Design of communications and SCADA equipment is integrated with the conveyance system and described further in that section of this appendix.

Main Pumping Unit Motors
The motors for driving the vertical turbine pumping units would be of the induction type with totally-enclosed fan-cooled (TEFC) enclosure. The motor voltage would be 480 volts, and the horsepower of each motor would vary from 15 to 250 horsepower, based on specific pump requirements at each pumping plant site. A typical electrical schematic control diagram for the variable speed units is shown on drawing 805-D-10431.

All motors would have similar control and protective devices supplied to provide for alarm and shutdown of the units for problem conditions. Shutdown of the respective pumping unit would also occur for a low water level condition.

Mechanical Equipment

Trashracks
One trashrack would be required at each drainage canal-side pumping plant at the entrance to the intake structure to prevent debris from entering the pump suction draft tubes. Each trashrack would have a 2-inch clear trashbar opening for protecting the pump units. Each trashrack is to be fabricated from structural steel American Society for Testing and Materials (ASTM) A36 and painted with polyurethane suitable for metal work to be in alternate atmospheric and submerged exposure.

Bulkhead Gates
One bulkhead gate and set of guides would be required at the entrance to each intake structure for maintenance of the pumps and traveling water screens. Each bulkhead gate would have one bypass valve. Each bulkhead gate is to be fabricated from structural steel ASTM A36 and painted with polyurethane suitable for metal work to be in alternate atmospheric and submerged exposure.

Traveling Water Screens
One traveling water screen would be installed at each intake structure of each pumping plant to remove moss, leaves, small twigs, and other debris from entering the pumping plant. Each traveling water screen is designed to be removed or replaced as a unit in stationary guides.

The traveling water screen removes accumulated debris from the water surface of the canal intakes. The traveling water screens would lift the debris to where high-pressure spray nozzles flush the debris away from the screened trays and dispose of it into a conveyor. The solenoid-controlled combination valve regulates the spray water to a pressure of 100 pounds per square inch. The solenoid feature

allows for electrical opening/closing of the valve plus fail safe closure of the valve should the solenoid become de-energized.

When startup of the spray water system is initiated, the solenoid causes the combination valve to open, which in turn causes startup of the screen drive motors. The valve would remain open for a preset time period to allow the fabric screen to travel through at least 1⅓ turns. After completion of travel, the screen drive and spray water are shutdown until the preset level of water elevation across the screen is again reached.

Traveling Water Screen Conveyors
Each traveling water screen would have a horizontal conveyor and an elevated conveyor. Each horizontal conveyor would have a dewatering belt made of rubber with ½-inch holes on a 6-inch center across the 29-inch width of the belt. Each elevated conveyor would have a rubber "Z" belt measuring 41 inches in width. The design load of conveyors is 100 pounds per linear foot of conveyor length. The conveyors would convey trash at a speed within the speed range of 16 to 18 feet per minute. Debris accumulation from the conveyers would require periodic trash removal services. Districts report that debris removal from existing water screen sites is biweekly.

Vertical Turbine Screen Spray Pumps
Each pumping plant would have a vertical turbine-type pump located behind the traveling water screen that provides water to the traveling water screen. The pump would supply 30 gpm of water.

Reuse Drainage System Design Summary

Tile Drains
Each reuse subarea has specific soil hydraulic conductivity and depth to barrier properties that were used to determine the depth and spacing of the tile drains. The discharge from the drains is prescribed to be an average annual rate, so tile diameter size is based on this average flow rate. These parameters were used to calculate drain diameter and length quantities across each subarea. For example, a 480-acre reuse parcel measures approximately 7,920 feet long and 2,640 feet wide. The drain spacing for this area is 250 feet. The spaced drains would run the width of the field (2,640 feet) and be parallel at 250-foot spacing. Therefore, 32 parallel drains would be required (7,920/250). The reuse collector drain would run along the length of the field (7,920 feet) and discharge to a sump. Tile drain design details are shown on drawing 40-D-6746, except that the typical pipe outlet shown on the drawing (discharge to ditch) does not apply. There are eight reuse sumps with pumping plants and pipelines that convey the reuse drainwater to regulating tanks, which feed into the RO treatment plant. The designs for these sumps, pumping plants, pipelines, and regulating tanks are presented in the "Conveyance System" section of this appendix.

Tailwater Recirculation

Irrigation tailwater within the proposed expansion areas of the reuse facilities will be discharged by gravity through furrows into the PO2 and FC5 drainage ditches, which run along the topographic low end of the reuse cropping area. Tailwater flows into the drainage ditches will be recirculated back to the reuse fields via the canal-side pumping plants. The earthwork required to form the tailwater discharge furrows is included in the cost estimate.

Land Leveling and Crop Seeding

Per unit acre prices for initial land leveling and crop seeding are included for the 4,585 acres of expanded reuse area.

Flow Control Valves and Manholes

Drainage flow control valves (DOS-IR valves) are located to control the discharge and groundwater table elevation under the reuse areas. The water table will rise under the field when discharge is restricted, which provides the mechanism for temporary storage of irrigation water. Opening the valves increases the discharge and lowers the groundwater table. Thus, the DOS-IR valves permit management of groundwater storage and water table elevation across the reuse areas.

Each spaced drain is designed with two valves—one at the connection with the collector drain at the low end of the field (at a manhole location) and one about midway upslope along the spaced drain. If only one valve were used, the water table under the field would become very shallow near the valve and deep at the farthest point away from the valve, and minimal success would be allowed on the control of the discharge and water table depth. Using two valves provides greater control for providing a more uniform depth to the water table along the length of the spaced tile drains. Data collection for final design will provide more details on subsurface soil properties, field slopes, pipe sizes, and potential locations for these water level control devices.

The valves are installed within the drains but use sleeved control levers that extend through the soil to above ground to permit O&M. Modeling of reuse operations assumed manual adjustments twice per month to change drainage discharge flows. The valves are assumed to be adjusted as needed to provide necessary groundwater storage, aerated plant root zone, and the prescribed discharge to the RO treatment plant. Valve assemblies are constructed from corrosion-resistant materials.

Concrete 48-inch manholes would be constructed at the junction of each spaced tile drain and collector drain to provide access for drain maintenance. Refer to standard drawing 40-D-6746 for manhole design details. Maintenance of drains would be periodic cleaning with a high-pressure sewer jet cleaner to remove any accumulation of sediment, salts, crop roots, etc., that could collect inside the drain tile.

Reuse Cells for RO Treatment Backwash

Separate tile drains would be constructed under the backwash cells to control the water table height to maintain vegetation growth and prevent localized shallow water tables. The backwash cell tile drains would discharge into a buried collector drain that flows by gravity to pumping plant sump WCC06D, which also receives drain flows from the PO6 reuse area.

The tile drains are assumed to be at 6-foot depth under the backwash cells. The general drain depth for the reuse area drains is 8 feet deep; however, 6-foot deep drains would be less expensive and likely easier to design to fit with a gravity flow collector to tile sump WCC06D. The tile drains would be placed at a spacing of 100 feet under the entire 80-acre plot. This is approximately 36 tile lines with a length of 950 feet each for a total of 34,500 feet. In addition, 36 concrete manholes (4 feet by 9 feet) would be required for connecting the spaced drain to the collector drain. The collector drain would be 4,550 feet long.

Figure 18 shows the contributions of drainage flow from reuse and backwash cells to the WCC06D conveyance pumping plant for the 2003–2004 modeling scenario. Pumping Plant WCC06D has a design peak capacity of 9.65 cfs. The addition of tile drain discharge from the backwash cells, as shown in figure 18, is easily accommodated within the design capacity.

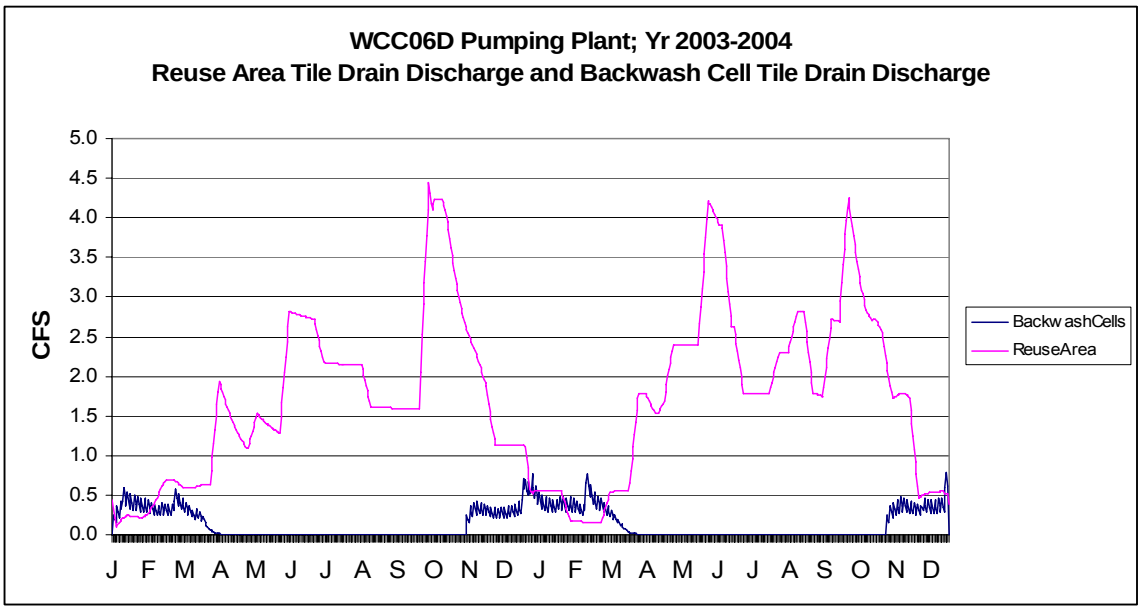

Figure 18. Reuse and backwash tile drain discharges to WCC06D pumping plant for 2003-2004 modeling scenario.

Conveyance System

The conveyance system conveys reuse drainwater from eight reuse sump locations to the RO treatment plant, which is located adjacent to the reuse facilities. The conveyance system consists of eight pumping plants, pipelines, and three flow regulating tanks. The conveyance system is graphically depicted in figure 19, and the conveyance flow schematic is shown in figure 11.

Reuse Drainage Pumping Plants Design Summary

Pumping plants would be constructed at Northerly Area reuse facilities to pump tile drainage collected in eight reuse sumps to the RO treatment plant. A summary of pump design parameters is shown in table 15.

Pump and Unit Piping Selection

Reclamation materials engineers evaluated current and projected drainage water quality reports and prepared a list of recommended pump materials with the least expensive being stainless steel as well as a recommendation to not use graphite impregnated packing. Based on the evaluation, enamel-coated cast iron bowls with stainless steel impellers were selected. During final design, less expensive impeller material would be evaluated to use on this project.

VFDs were used on all the conveyance pumps in the Northerly Area. It was assumed that the speed of each individual pump could be reduced to provide a range of flows from 100% (rated) to 60%. The flow range would be verified with pump suppliers during final design and adjusted as required. Pumps were selected to meet the pumping plant requirements, including a 5% margin for wear. All of the pumps are mounted over a conventional wet sump concrete intake structure.

The unit piping and manifold piping for each of the pumping units is steel and is sized for a maximum velocity of 10 feet per second to minimize friction losses.

The air chambers would be designed and constructed in accordance with ASME Boiler and Pressure Vessel Code.

Typical spare pump parts, such as pump bearings, lineshaft bearings, motor bearings, wear rings, gaskets, and seals, would be provided to expedite pump repairs should the need arise.

Pumping Plants WCC02A, WCC03B, WCC01C, and WCC11D

One typical plant layout was designed for these four pumping plants, which would provide conservative pumping plant sizes and associated costs. A more detailed design for each of the various size pumping plants would be completed during the final design phase of this project, as required.

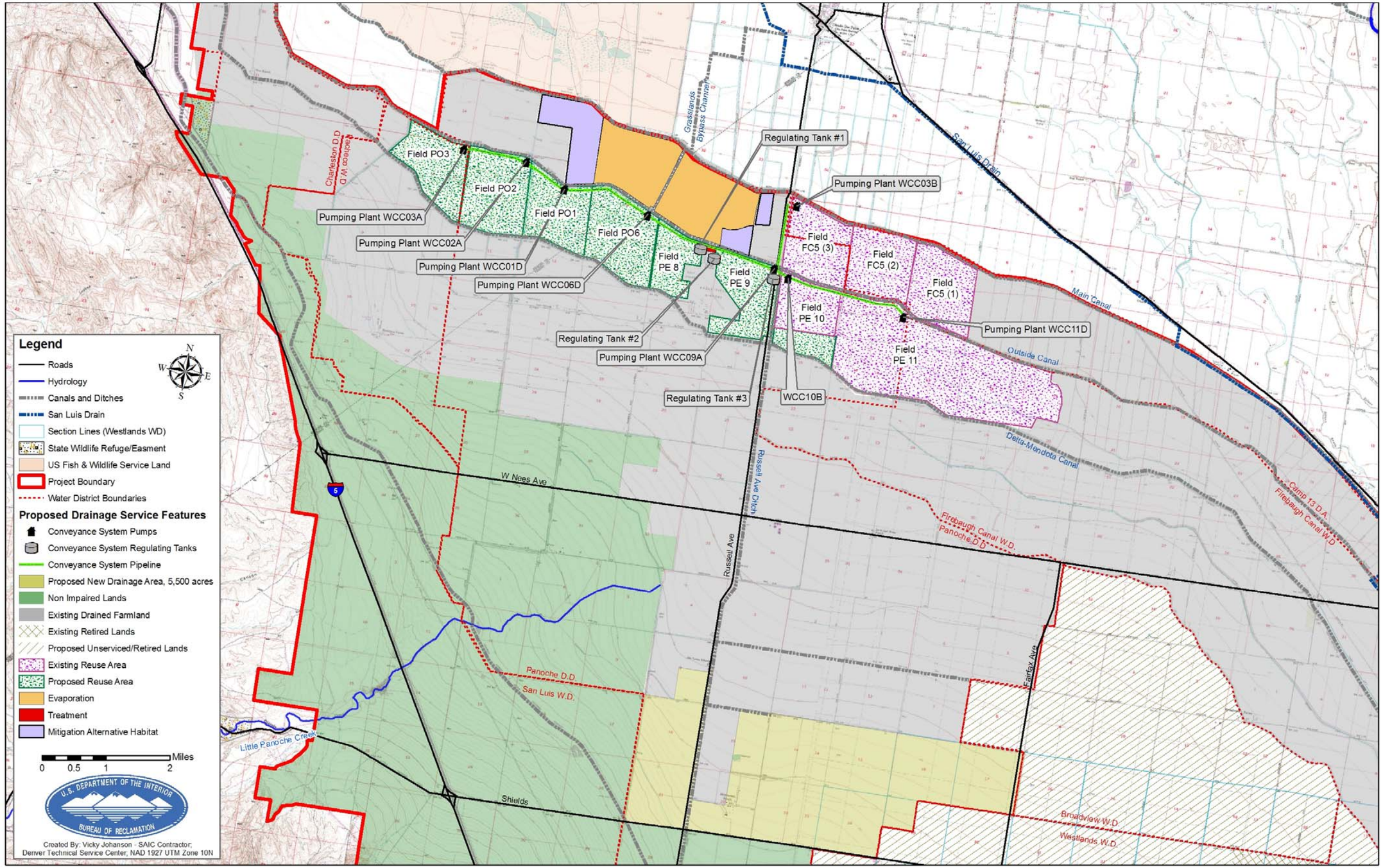

Figure 19. Existing and proposed reuse areas, including conveyance facilities in the Northerly Area.

Table 15. Pump and pipeline design parameters for Northerly Area conveyance system

	Inlet								Conveyance Pipeline			Outlet				Comments
				At Pump												
Collection Water Source	Pump Location	G.S. Elev. (ft)	W.S. Below G.S. (ft)	Static Head (ft)	TDH (ft)	Flow (ft^3/s)	*Initial* BHP (HP/ea)	Air Chamber Dia x H (ftxft)	Nom. Dia. (in)	Length (ft)	Flow (ft^3/s)	Reach Terminus	Discharge Outlet	G.S. Elev. (ft)	W.S. Above G.S. (ft)	
Tile drain	WCC03B	135	12	50	51.0	2.0	*15.6*	15x15	24	6,028	2.0	TCC09A	Regulating tank #3	148	25	Min. flow, only pump station running
					66.0	13.1	*132.0*				13.1					Max. flow, only pump station running
					52.0	2.0	*15.9*				4.0					Min. flow in both stations running
					57.0	2.0	*17.4*				8.6					Min. flow, max. flow in other station
					83.0	13.1	*166.1*				19.7					Max. flow in both stations running
Tile drain	WCC11D	148	12	37	81.0	13.2	*162.7*	15x15	22	10,867	13.2	TCC09A	Regulating tank #3	148	25	Max. flow
					38.0	2.0	*11.6*				7.8					Min. flow
Tile drain	WCC10B	148	12	37	37.0	4.1	*23.2*	15x15	14	287	4.1	TCC09A	Regulating tank #3	148	25	Max. flow
					37.0	2.0	*11.3*				2.5					Min. flow
Tile drain	WCC09A	148	12	37	38.0	4.7	*27.0*	15x15	14	100	4.7	TCC09A	Regulating tank #3	148	25	Max. flow
					37.0	1.0	*5.7*				2.8					Min. flow
Tile drain	WCC03A	148	12	27	128.0	8.9	*174.0*	15x15	20	5,264	8.9	WCC02A	Regulating tank #1	144		Max. flow
					30.0	1.5	*6.9*				1.5					Min. flow
Tile drain	WCC02A	144	12	31	116.0	15.9	*281.7*	15x15	22	3,679	24.8	WCC01C	Regulating tank #1	148		Max. flow
					33.0	1.0	*5.0*				2.5					Min. flow
Tile drain	WCC01C	148	12	27	65.0	12.7	*126.1*	15x15	30	7,360	26.7	WCC06D	Regulating tank #1	148		Max. flow
					29.0	1.5	*6.6*				4.0					Min. flow
Tile drain	WCC06D	148	12	27	42.0	9.7	*61.9*	15x15	32	6,114	26.7	WCC05D	Regulating tank #1	148	15	Max. flow
					28.0	1.5	*6.4*				5.5					Min. flow

Each of the pumping plants consists of three vertical turbine pumps with VFDs. Three different sized pumps with VFDs were needed to pump from 3.0 to 13.8 cfs, including any flow within the range. The rated flows for the pumps are: 13.8, 8.3, and 4.9 cfs, respectively. Only one pump per pumping plant would be operated at any time.

During final design, using two identical pumps instead of two different sized pumps for the two largest pumps would be evaluated. Utilizing this pump combination could slightly reduce the sump depth, the cost of pump motors, and cost of the VFDs. A second option that would be evaluated is utilizing a fixed-speed drive instead of a VFD for the smallest pump.

Pumping Plants WCC03A, WCC09A, WCC10B, and WCC06D

One typical plant layout was designed for these four pumping plants, which would provide conservative pumping plant sizes and associated costs. A more detailed design for each of the various size pumping plants would be completed during the final design phase of this project as required.

Each of the pumping plants consists of two identical vertical turbine pumps with VFDs. The pumps would operate individually or together to pump from 3.3 to 9.3 cfs, including any flow within the range. The rated flow for each of the two pumps is 4.7 cfs per pump.

Structural and Architectural Design

The conveyance system pumping plants have multiple pumps with the pump column and bell housed in an open sump below a concrete slab. The power source to the plant sites is electricity from the local power grid. Motor voltage power would be provided via a small pad-mounted transformer located within the service yard. (See drawings 805-D-10408 and 10410.)

The pumping plant sites are located within the reuse fields and lift water to the regulating tanks located at or near the RO treatment plant. The pumping plant sump is fed by gravity with clean (i.e., naturally filtered) water from the reuse field drainage collection system. Consequently, trash, aquatic growth, and silt accumulation do not influence the pumping operations. The pumped water quality is considered corrosive to metals, and adequate concrete cover would be necessary for steel reinforcement. A cathodic protection system may be considered in the final design for exposed metalwork.

The service yard is sized to accommodate the pumping plant, an air chamber, and vehicle access for O&M. The yard is delineated and protected by a 7-foot-high fence with two access points consisting of a 20-foot-wide double gate entry. The service yard is surfaced with 6-inch-deep gravel. The soil at the pumping plant sites provides little support when saturated and may require further remediation to accommodate wheel loads in subsequent designs.

Service yard drainage would be provided by sloping the finished yard away from the pumping plant or other features located within the service yard. The finished yard surface would match the existing ground elevation along the perimeter of the service yard.

A reinforced concrete masonry unit wall is provided on the plant deck as a noise and visual barrier and bullet protection to the equipment. The plant equipment is self-contained for dust and moisture protection and cooling (when required). The plant deck slab is sized to accommodate the mechanical and electrical equipment and spaced to provide operating and safety clearances. The dimensions for equipment used in the depicted layouts are estimated. (See drawings 805-D-10409 and -10411.)

The plants are outdoor type; and the intake structure, plant slab deck, discharge pipe encasement, and the open sump are constructed with cast-in-place reinforced concrete. A sunshade is required to limit the heat exposure of the plant deck. The sunshade has a removable roof section for access to the pump units. The plants are unmanned and are remotely controlled; therefore, no toilet or office areas or tool area for maintenance and repair are provided. Cranes and other lifting devices are not installed at the pumping plants. All equipment handling would be provided by means of a mobile crane or portable hoisting equipment. Operation of the pump delivery system may raise the groundwater at the pumping plant sites because of reuse area irrigation, and irrigation drainage. The designs for the structural foundations would account for this anticipated rise in the groundwater elevation.

Foundation Conditions

Using native materials as compacted structural backfill is not uncommon in this area. Only the few areas of high plastic index soils would exclude the native soils from being used as backfill material. Even so, lean to sandy-lean clay material of acceptable plastic index would be available from wasted soils at adjacent excavations, given the size and scope of this project. It is appropriate for feasibility level design that native soils be used as structural backfill for the proposed pumping plant structures (and water treatment facilities). It is anticipated that soils may require moisture content conditioning prior to placement to meet Reclamation's structural backfill compaction requirements.

The issue of differential settlement or expansive soils is of concern to all structures of this project. It is not practical to assume that structural foundation treatments alone will adequately address the issue. Even with over-excavation and replacement of foundation materials differential movements can be expected. The region as a whole is prone to differential ground movement. Smaller structures should be designed to provide their own internal stiffness and anticipate differential movements of the foundation. The larger structures are designed to be founded on deep pile foundations; however, some differential foundation movement should be assumed.

Structures should be designed with the assumption of floating foundations and should account for differential movement by liberal use of over-excavation, compaction, and limited slip-pipe couplings that allow for movement or rotation between points of connection. Removal and replacement of excavated foundation material will not solely solve the issue of differential settlement or expansive soils. In general, the pumping plant structures will be lighter then the material removed. Preconsolidating the base soils may not be required. Preconsolidation may produce rebound that could be detrimental to the structure.

Foundation designs and the use of excavated soils for structural backfill should be reviewed as more site-specific subsurface geologic data is collected during final design. Foundation pretreatment assumptions should be reviewed in the final design effort. The current assumed 2:1 excavation cut slopes are appropriate for feasibility level design but should also be reviewed at final design.

Open cut excavation is used for the plant sumps and is likely for the intake pipeline within the plant service yard. The open area excavations have 2:1 cut slopes (horizontal:vertical). The foundation backfill compaction improves the soil's bearing capacity, reduces vibration induced settlement, and reduces the potential for consolidation during seismic events.

Construction Considerations

Excavation for the pumping plant sump and the intake pipeline would require dewatering and unwatering during construction. This would ensure adequate soil compaction and provide some consolidation of the surrounding in situ soil. The groundwater is estimated to be approximately 8 feet below the existing ground surface at all the pumping plant sites.

Vacuum systems such as well points may not be effective in fat clays. Using well points is only one option that was estimated. Dewatering excavations will be difficult at best. The majority of the soils are lean to sandy-lean clays. There are areas of fat clays, but even these fat clays have a higher permeability than what would be expected. The soils have a very low density as well as a fabric of micro fractures that correspondingly increase the transmissivity of the soil. This is evident by both the productivity of the land being farmed and the results of the subsurface field permeability testing as documented. The purpose of well points would be to induce downward drainage to reduce pore pressures within an excavated slope.

All common excavations below groundwater will be difficult due to the general soil conditions of the area. The feasibility level costs were conservatively estimated to reflect this difficulty and the uncertainty of not knowing the soil properties at the precise excavation locations. Although not shown on the design drawings, cost estimates assume placement of a "French drain" system of slotted pipe and a 12-inch layer of gravel across the base of all excavations below the groundwater table for structures such as pumping plants. At best, the low-density,

saturated, lean to fat clays will be a muddy mess. These construction difficulties would be exacerbated during the winter rainy season; construction schedules should take this into account. The placement of firm, free-draining gravel will facilitate placement of concrete slabs as well as facilitate the removal of surface water during the construction effort.

Electrical Power Supply and Equipment

Incoming Power Supply and Distribution Equipment
The local electrical utility would bring in the power lines to each plant. Transmission lines bringing power to the pumping plants are described in attachment 3 of this appendix. Transmission lines would transfer power to a power pole with a fused disconnect and arrester mounted on the power pole. From there, either a pole-mounted transformer or pad type transformer would be connected.

The power requirements were determined by total pump sizes and plant load requirements. Plant loads are estimated considering a maximum load of everything powered on. Power requirements and plant load factors should be re-evaluated during final design.

Assumptions:

- The utility would provide all power needed at the voltage of 12.47 kV, effectively grounded for each plant.
- The power company would install any revenue metering required for power consumption billing purposes.
- The Government would provide poles, fused disconnect and arresters, and a transformer for each plant.

Incoming power to each pumping plant site would be 480 volts, three-phase. The 480-volt incoming power would be brought into a meter base and service disconnect switch and then would continue on to a 480-volt distribution panel board or motor control center which would service plant loads. A combination transformer and load center would be provided to service 240/120-volt power to service lighting, receptacles, and other low voltage plant loads.

Control Equipment
The multi-unit plants would use a MCC and VFD for starting and operating the variable speed pumps. The MCC would contain the standard equipment including combination motor starters, control power transformers, selector switches, pushbuttons, and unit protective and control devices. The MCC would also have motor starters and control equipment for air chamber equipment. Two typical single-line drawings show the electrical power distribution for the eight conveyance system pumping plants. (See drawings 805-D-10426 and -10427.)

Adjacent to the control equipment is a SCADA cabinet which would provide start/stop signals for the pumping units. The SCADA system provides automatic operation of the pumping units based on flow requirements and system conditions.

Main Pumping Unit Motors
The motors for driving the vertical turbine pumping units would be of the induction type with a TEFC enclosure. The motor voltage would be 480 volts, and the horsepower of each motor would vary from 20 to 200 horse power, based on specific pump requirements at each pumping plant site. A typical electrical schematic control diagram for the variable speed units is shown on drawing 805-D-10431.

All motors would have similar control and protective devices supplied to provide for alarm and shutdown of the units for problem conditions. Shutdown of the respective pumping unit would also occur for a low water level condition.

Communications

General Designs
Fiber optic and wireless networks would be used to establish communications between the RO and biotreatment plants, reuse irrigation pumping plants, conveyance pumping plants, and farm sumps.

Fiber Optic Networks
Each fiber optic network would be comprised of 12 and 24 fiber single mode fiber optic cables. Using single mode fiber optic cable guarantees that communications via fiber between sites can be accomplished without repeaters for distances up to 50 miles. The fiber optic cable would be installed in HDPE conduit that is installed when collection, distribution, and conveyance pipe is being installed. The fiber optic cable would be pulled into the conduit after installation of the pipe and construction of the various features (RO, biotreatment, pumping plants, etc.).

The fiber optic cable of choice is a double jacketed all-dielectric cable manufactured by Corning. The all-dielectric cable is immune to induced voltage and can be installed parallel to power cable and near power equipment if necessary.

Network switches with integral media converters would be used to transmit data among the various fibered sites. This network can be used for other communication needs if desired. Voice-over-data communications (telephone) and full frame video (security) are available using existing hardware from several manufacturers, if required.

Wireless Networks

The wireless networks would be comprised of wireless spread spectrum radios. The configuration of the collection and conveyance system determines the type and location of wireless communication. All wireless networks used in this design are license free.

Spread spectrum radios would be used at RO treatment plants to communicate with the commercial farm wells, reuse irrigation pumping plants, irrigation delivery valves, and reuse drainage pumping plants.

Spread spectrum radios have been selected to create the various radio networks throughout the Northerly Area. Spread spectrum radios operate in two frequency bands, 900 megahertz and 2.4 gigahertz. Respectively, the frequency bands offer 50 to 400 channels (noninterfering frequencies), 240 user selectable radio addresses, 30- to 100-user selectable hop patterns, and radio ranges up to 20 miles. By design with noninterfering frequencies, selectable radio addresses, and selectable hop patterns, spread spectrum radios provide secure and reliable communications and provide the ability to create subnetworks when the terrain provides radio dark spots.

Specific Northerly Area Designs

Approximately 15,000 feet of fiber optic cable would be used to connect the RO and biotreatment facilities and pumping plants FC5a-b, WCC03B, WCC09A, and WCC10B. Spread spectrum radio networks would be used to connect the fiber optic network to pumping plants PE14, WCC06D, WCC01C, WCC02A, WCC03A, WCC11D, PCC06D, PCC16D; 35 farm wells; pumping plant FC5-b to fields FC5-1, FC5-2, and FC5-3; pumping plant PCC06D to fields P01, P02, P03, and P06; and pumping plant PCC16D to fields Russell 8 and Russell 9.

Northerly Area spread spectrum radio networks are defined as follows:

- NR-NET1 connects the fiber network to pumping plants PE14, WCC06D, WCC01C, WCC02A, WCC03A, WCC11D, PCC06D, and PCC16D.
- NR-NET2 connects the fiber optic network to the 35 farm wells.
- NR-NET3 connects pumping plant FC5-b to fields FC5-1, FC5-2, and FC5-3.
- NR-NET4 connects pumping plant PCC06D to fields P01, P02, P03, and P06.
- NR-NET5 connects pumping plant PCC16D to fields Russell 8 and Russell 9.

SCADA Systems

A key feature of the SCADA system design was to pursue an integrated homogenous control system for the entire project. It is believed that the integrated homogenous control system would reduce hardware and software conflicts, reduce integration costs, reduce O&M costs, reduce training costs, and reduce spare parts inventories. An integrated homogenous control system implies that the same hardware, software, and instrumentation selected to control RO treatment would be used at biotreatment, reuse area pumping plants, and farm pumping plants, etc., whenever possible.

The RO treatment facility is viewed as the pivotal location in the collection-treatment process and is, therefore, recommended as the location of the SCADA master station. Control origination from the RO treatment facility should allow the collection system (reuse area pumping plants) to follow or track RO treatment. Following or tracking is the recommended method of control for the Northerly Area pumping plants because of using variable speed pumps.

A Rockwell (Allen-Bradley)-Geomation solution has been selected that would use Allen-Bradley programmable logic controller (PLC) at all treatment plants and pumping plants, and Geomation remote terminal units (RTUs) at all farm wells. Both the Allen-Bradley PLCs and Geomation RTUs can be controlled by Rockwell's RSView software. RSView software has been selected because of ease of programming, scalability, flexibility, and excellent training and support.

The Allen-Bradley PLC line was selected because of the RSView Software, the number of different configurations of PLCs, compatibility with Allen-Bradley variable speed drives, and the available Allen-Bradley wiring and terminal block systems. The wiring and terminal block systems reduce wiring errors and conductor tagging.

The geomation RTU was selected because of its compatibility with the Rockwell Software, operating temperature range (-40 to 70 degrees Celsius [°C]; -40 to 158 degrees Fahrenheit [°F]), compact size, modular input/output modules, and remote input/output capability. The temperature range is of great importance because of the farm field environment that the RTUs would be placed in and the remote input/output capability because it allows one RTU to control two wells at double well sites.

Flow Meters

Each of the reuse drainage pumping plants would have a magnetic flow meter in the outflow pumping line to measure the flow of water conveyed to the regulating tanks. The magnetic flow meters were selected as a low-cost alternative of acceptable accuracy for measuring water. The flow meter shall indicate, totalize, and transmit flow in full pipe. The flow meter

requirements are based on the design flows through the diameter of the pipeline. The flow meter for each would be microprocessor-based.

Each flow meter would be designed with 150-pound flanges. Each flow meter would have a remote mounted flow meter transmitter furnished in a NEMA 4X enclosure box. The transmitter would simultaneously display flow rate (cfs), the quantity of water in acre-feet, and indicate instantaneous flow rate in gpm. Each flow meter would have 10 diameters of pipe length before the flow meter and 5 diameters after the flow meter. Each flow meter measures within plus or minus 0.5% of actual flows, where the flow velocity is above 1.0 foot per second. Each flow meter lining would be polyurethane and would be suitable for operation at temperatures from -20 ºF to 140 ºF. The analog outputs are isolated type output signals, which provide 4- to 20-milliampere output signals for flow rates to be linear to their respective flows. Each flow meter would be suitable for operation with 120-volt, single-phase, 60-hertz power. No ventilation would be supplied in the flow meter vault.

Sump Pumps

A drainage sump pump unit would be supplied in each flow meter vault and would have a minimum capacity of 10 gpm at 15 feet of head, a threaded discharge connection, a cast iron body with corrosion resistant components, and would be designed for submersible operation without an internal check valve.

Pipelines and Regulating Tanks

Pipelines convey reuse drainwater from each of the eight reuse sumps to the three flow regulating tanks. Pipelines are HDPE, and construction is the same as described for pipelines in the “Drainage Reuse Facilities” section. Total length of conveyance system pipelines is approximately 40,000 feet.

Pumping plants WCC03A, WCC02A, WCC01C, and WCC06D are connected in series along a single pipeline that discharges into Regulating Tank No. 1 at an elevation head of 15 feet above ground surface. Pumping plants WCC03B, WCC11D, WCC10B, and WCC09A each have a separate pipeline that carries drainwater from its sump to Regulating Tank No. 3 and discharge at an elevation head of 25 feet above ground surface.

Regulating Tank No. 2 receives reuse bypass flows (i.e., not reuse drainwater) at an elevation head of 15 feet about ground surface during the winter months from the canal-side pumping plant PE14 as described in the “Drainage Reuse Facilities” section. The design for this tank is included in this “Conveyance System” section since all three tanks are similar.

Regulating Tanks No. 1 and No. 2 are both located at the RO treatment plant. Regulating Tank No. 3 is located about 1 mile east (see figure 19) and requires

an additional gravity flow pipeline to convey the reuse drainwater to the RO treatment plant where it is discharged at an elevation head of 15 feet above ground surface.

The diameter of each of the three regulating tanks was determined by the maximum flow rate of the largest pump supplying water to the regulating tank and the minimum allowable motor run time for the respective pump motor. Factoring in the minimum allowable motor run time would provide optimum life of the motor windings by preventing overheating and premature failure of the winding insulation from inadequate cool-down periods occurring from frequent starting and stopping of the units. The height of the tanks includes volume to maintain a minimum water surface, volume for overflow, and a 10-foot operating range for the pumps. The regulating tanks would be designed and constructed in accordance with American Water Works Association D-100. Silt accumulation may be a maintenance issue for the tanks that receive drainwater from the canal-side pumping plants (FC5a and PE14).

The Northerly Area pipeline regulating tanks have a precast concrete pile foundation with a reinforced concrete pile cap. The pile cap extends 1 foot beyond the inside diameter of the regulating tank to facilitate anchorage connections. (See drawings 805-D-10414 and -10415.) The tank foundation style is modeled after the design for the biotreatment plant foundations. The soil in the area would provide weak support and is susceptible to consolidation. The friction type piles would provide a feasible foundation support for these conditions.

The regulating tank service yard is sized to accommodate the tank, the tank foundation, associated equipment, and vehicle access for O&M. The yard is delineated and protected by a 7-foot-high fence with a 20-foot-wide double gate entry. The service yard is surfaced with a 6-inch depth of gravel. The soil at the tank sites provides little support when saturated and may require further remediation to accommodate wheel loads in subsequent designs. The regulating tank emergency overflow piping would be routed to a nearby low area for disposal.

Reverse Osmosis Treatment Plant

The cost estimates developed from the designs presented in this section (with the exception of product water conveyance) do not meet Reclamation's standards for feasibility level and are, thus, considered appraisal level designs and cost estimates. RO treatment is considered to be an established and proven technology; however, additional pilot studies will be needed during final design to optimize construction and operational details. Consequently, the cost estimates developed from these designs include higher than normal contingency allowances to address the uncertainties associated with the appraisal-level costs and future piloting.

Most drainage is delivered to reuse areas where approximately 73% of the water is removed through ET. Up to the limits of solubility, the salts and other dissolved components remain in the water. The effluent from the reuse facilities and some drainwater that bypasses the reuse facilities in the Northerly Area comprise the feedwater for the RO plant. The RO plant operates at approximately 50% recovery. Half of the volumetric flow from which most of the salt has been removed is returned to the districts' irrigation supply (Outside Canal and DMC). The half containing most of the salt is delivered to the biotreatment facility where the selenium is removed. The treated effluent from the biotreatment facility is delivered to the evaporation ponds for final disposal.

Pilot Plant Testing

Field pilot tests were conducted to evaluate RO treatment and pretreatment requirements and to collect data in support of full-scale design and cost estimates. Pilot tests were performed at Panoche Drainage District in the Northerly Area and at RRR in Westlands. Both pilots used agricultural drainage as the feedwater; however, the salinity of the drainage at RRR was approximately twice the concentration of salinity at the Panoche test site. The potential variation in feedwater for full-scale treatment facilities is expected to encompass the range of feedwater qualities at both pilot sites. Therefore, the results from both pilots are considered relevant and discussed below.

RO Pilot Test at RRR

The pilot test was conducted from July to December 2003 and included testing of both RO and nanofiltration (NF) membranes. This was done with the understanding that product water from the proposed plant is not required to meet drinking water regulations but that it should be adequate for irrigation usage. Comparing the two processes, NF was expected to require less energy and a smaller membrane area per unit product water than RO; but because of the higher concentration of dissolved solids, the NF product would have to be blended with larger quantities of fresh irrigation water.

Drainage water collected from an agricultural tile drain system at RRR was used as the pilot feedwater. The collected drainage water is from the third collector system in a sequential series agricultural reuse operations designed to allow reuse of drainage water on progressively more salt tolerant crops to concentrate and minimize the volume of drainage water requiring disposal or treatment. The pilot retrieves this reused drainage from a covered concrete sump, Sump D.

Given that the RO feedwater is shallow groundwater collected from subsurface tile drains, there was a possibility that pretreatment to remove particulates and colloids might not be necessary. Measurements of silt density index (SDI), however, determined that particulate/colloid removal was necessary. Pretreatment steps were added incrementally until particulate/colloid removal was great enough to achieve and maintain SDI measurements less than 4.0. The

following pretreatment steps were added sequentially to achieve the necessary particulate/colloid removal:

1. Dual media filtration (anthracite over sand)
2. Coagulant injection
3. Flocculation/clarification

It was found that a sedimentation basin was not necessary and that weekly backwashing of the media filter was adequate to remove the particulate load.

The RO membranes were fouled shortly after startup due to a failure in the pretreatment. A subsequent membrane cleaning restored some of the lost productivity, and the membranes performed in a stable fashion at about 50% recovery and 99% rejection of total dissolved solids (TDS) and selenium (about 60% for boron) for the remainder of the 700-hour test.

RO Pilot at Panoche, Phase I

The first phase of the pilot test at Panoche was conducted from August to December 2004. The feedwater to the RO pilot was agricultural drainage collected in a concrete sump. In contrast to the RRR site, the feedwater at this location did not require significant pretreatment for removing particulates/colloids. The RO pilot unit included a dual media filter (anthracite over sand), but coagulation and flocculation were not necessary to maintain SDI measurements below about 3.0. A total of 2,042 hours of operation was accrued on the RO membranes, which showed no signs of fouling during operation or subsequent membrane autopsy. The system operated at a recovery of 50%, and the membranes achieved 99% rejection of TDS and selenium (about 40% for boron).

RO Pilot at Panoche, Phase II

The objective of the Phase II RO pilot study (September to December 2005) was to evaluate the performance of RO membranes on drainage water at recoveries higher than 50%. The Phase I RO pilot test, conducted from August 2004 to December 2004, operated at a recovery of 50%. The Phase II RO pilot study operated at recoveries in the range of 55 to 65%.

New antiscalant chemicals recently commercialized offered the possibility of increasing recovery in the RO units. Increasing the RO recovery would reduce the quantity of concentrate flow to the biotreatment plant and evaporation pond facilities. The increase in O&M costs due to running the RO at higher recoveries is considered modest compared to the significant decrease in construction costs that using smaller selenium biotreatment and evaporation pond facilities would provide. A 4-month pilot test period was dedicated to verify the performance of RO membranes at recoveries higher than 50%. In addition, the test allowed using

different antiscalant and antiscalant mixtures. The test would also demonstrate the impacts of operating at higher RO recoveries on the downstream treatment processes.

Unfortunately, the new antiscalant materials did not live up to their promise. Serious scaling of the RO pilot system and of downstream equipment occurred at 64% recovery. The pilot system was subsequently cleaned, and the recovery was reduced to 55%. Scaling continued to occur even at 55% recovery; however, there was uncertainty as to whether the scaling resulted from scale residue within the equipment or insufficient crossflow velocity across the membrane surface. Consequently, it was concluded that 50% recovery should be the assumption for the design of full-scale treatment plants.

Alternative Process Testing

WaterTech Partners (Moraga, California) in collaboration with PCI Membranes (Milford, Ohio) developed and tested a system that they termed "double pass preferential precipitation reverse osmosis" (DP3RO™). This process uses a seeded first pass NF step in which calcium sulfate is removed as a slurry from the water, followed by a second pass RO system in which more soluble salts, principally sodium chloride, are removed. The developers claimed to be able to achieve a water recovery of up to 97%. A pilot test performed at the Panoche site was partially successful. The researchers were able to demonstrate significant removal of calcium sulfate and, therefore, an overall system recovery of product water at 88%; however, the solids in the slurry abraded the surface of the NF membranes. Followup tests with a more durable membrane were not conducted long enough to demonstrate whether this problem had been resolved.

Future Testing

A demonstration test of RO and pretreatment should be performed during final design of the full-scale treatment plant. A suitable demonstration system would consist of one or more 8-inch, six-element vessels of commercially available elements. The demonstration test should use a reuse drainwater source that will actually be used in a full-scale treatment plant and should run a minimum of 12 months to cover the seasonal variations in drainwater that are expected to occur.

The biggest unknown that could be tested is whether the drainage from reuse areas needs the conventional pretreatment system that was used during the RRR pilot test or whether a properly constructed tile drainage system would meet the particulate filtration requirements for RO membranes. Ideally, the drainage collection system (both tile drains and open drainage ditches) would be identical to what is planned for implementing Federal drainage service. Additionally, bench- and pilot-scale evaluations of new technologies to increase RO product water recovery should be considered on a continual basis.

Expected Feedwater Quality

The feedwater for the RO treatment plant will be collected in agricultural tile drains, delivered to sumps, and pumped to a feedwater tank, where it will have from 40 minutes to several hours residence time. The amount of particulates and colloids in the collected drainwater are dependent upon the construction and the operation of the tile drainage system in the reuse facilities. The RO pilot tests conducted at RRR and Panoche indicate that widely different results can occur and impact the type of pretreatment required. A portion of the feedwater flow to the Northerly Area RO plant will consist of drainwater pumped from open drainage ditches occasionally during winter months when the reuse areas are unable to utilize it for irrigation of reuse crops. These bypass flows will not receive the benefit of subsurface filtration at the reuse facilities prior to arrival at the RO plant. These drainwater flows are considered to be surface waters requiring conventional pretreatment for removal of particulate loads.

Considerable uncertainty exists with respect to the composition of the feedwaters, particularly to the change of composition that would be produced by percolation of the drainwater through the soils of the reuse facilities. The equilibrium chemistry of reuse irrigation, soil infiltration, and the subsequent quality collected drainwater was evaluated using chemical equilibrium software. The parameters that most significantly affect performance of the RO plants are the percent saturation of sparingly soluble salts such as calcium sulfate and calcium carbonate. Based on the results of the chemistry evaluation, it appears reasonable to conservatively assume that drainage effluent from the agricultural reuse areas would be saturated with respect to these two compounds, which eliminates them as variables when considering a wide variety of possible input compositions.

Major feedwater composition parameters, including TDS of the feed and the reject streams, are given in table 16.

Reverse Osmosis Plant Design

RO design programs from three membrane manufacturers—Koch Membrane Systems, Hydranautics, and Osmonics—were employed. Figure 20 shows a line diagram of the RO treatment plant. The plant layout is presented in drawing 805-D-10419. A summary of the plant design is presented in table 17.

Inlet/Regulating Tanks

There are three inlet/regulating tanks with a volume of feedwater sufficient for at least 30 minutes of operation. The design and locations of the regulating tanks are described in the “Conveyance System” section of this appendix.

Table 16. Composition of RO feed and reject streams

Parameter	Units	Northerly Area
Feed Composition		
TDS	mg/L	6,096
Sodium	mg/L	2,002
Chloride	mg/L	1,837
Sulfate	mg/L	1,786
Reject Composition		
TDS	mg/L	12,273
Sodium	mg/L	3,950
Chloride	mg/L	3,619
Sulfate	mg/L	3,558

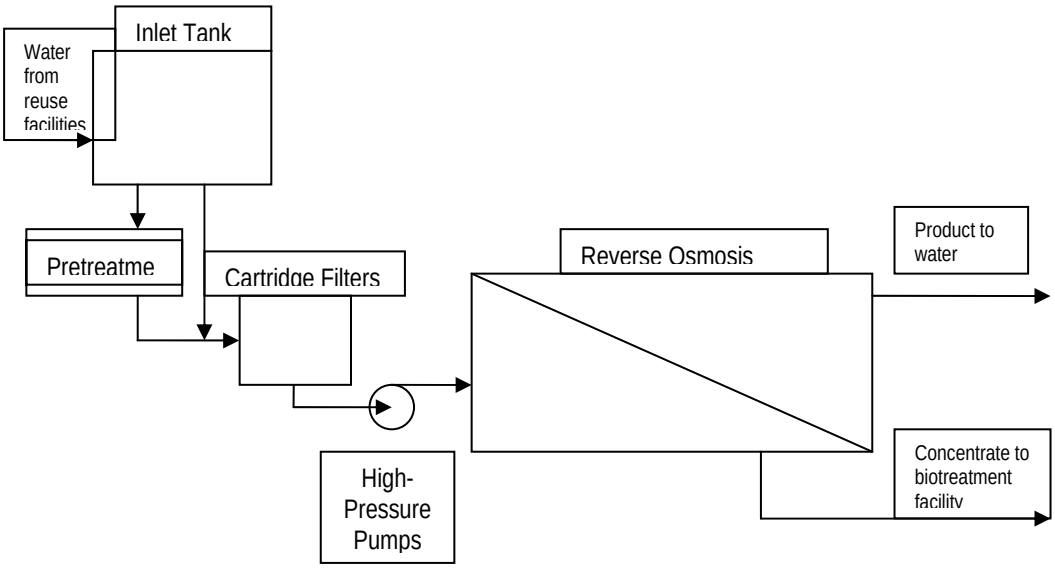

Figure 20. Process diagram of the Northerly Area RO plant.

Table 17. Summary of design of RO treatment plant

Parameter	Value
Plant	
Nominal Feed Flow, gpm	11,000
Recovery	Generally 50%
Planned Operation, hours per day	24
Plant Availability	95%
Operating Temperature	19 ± 6 °C
Pretreatment	
Feed Storage Tank, gallons	≥ 330,000
Rapid mix tank volume, gallons	3,938
Flocculator volume, cubic feet	29,000
Filter Area, square feet	2,954
Antiscalant Chemical Addition	6 mg/L
Pad Area, SF	22,000
Backwash Volume, gallons per year	35,000,000
Backwash Disposal	To reuse area
Desalting Units	
Number of Trains	4
Number of Vessels	308
Number of Membrane Elements	1,848
Nominal Operating Pressure, psi[1]	262
Maximum Operating Pressure, psi	325
Energy Recovery	No
Product Delivery	
Nominal Product Flow, gpm	5,500
Product Water Treatment	None
Product Water Delivery	To irrigation reuse
Concentrate Disposal	
Nominal Concentrate Flow, gpm	5,500
Concentrate Disposal	To biotreatment
Other	
Power Requirement, kWhr/yr[1]	11,000,000
Building Area, SF	18,560
Drawing Number	805-D-10419

[1] psi = pounds per square inch; kWh/yr = kilowatthours per year.

Pretreatment

Feedwater flows to the RO plant are dependent upon the upstream operations in the reuse facilities. Estimates of feedwater flows were developed by modeling reuse operations as described in the "Collection" and "Reuse" sections of this appendix. Based on this modeling, it is assumed that most of the drainwater flow in the Northerly Area will bypass the reuse areas during the winter months. This flow is conveyed through open canals or ditches and may receive considerable insolation during its passage to the plant. A graph showing expected reuse area drainage and bypass flows (data from the year 2002) is provided in figure 21.

This figure shows that from December to March, most of the flow to the treatment plant is bypass flow.

The quality and composition of the bypass flow would be much more variable than the flows from reuse drainage sumps. Data used for this analysis were those taken from a site described as Grasslands Bypass Project Site A. Data reported were measured between September 1996 and June 2005. Since the desalting plant would receive this flow only during certain seasons of the year as indicated above, the data have been plotted by day of year.

Figure 22 shows suspended solids. This parameter varies widely, several points being above 500 parts per million (ppm). The average is just over 100 ppm. The high suspended solids means that feed flow would have to be pretreated from approximately the beginning of November to the end of the following March.

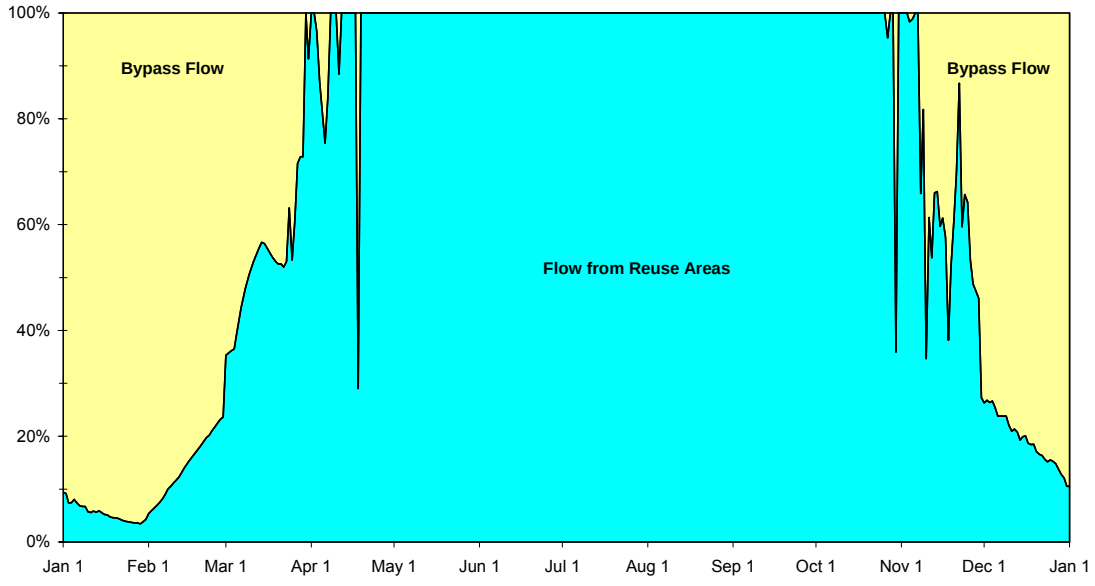

Figure 21. Fraction of feed flow from reuse areas.

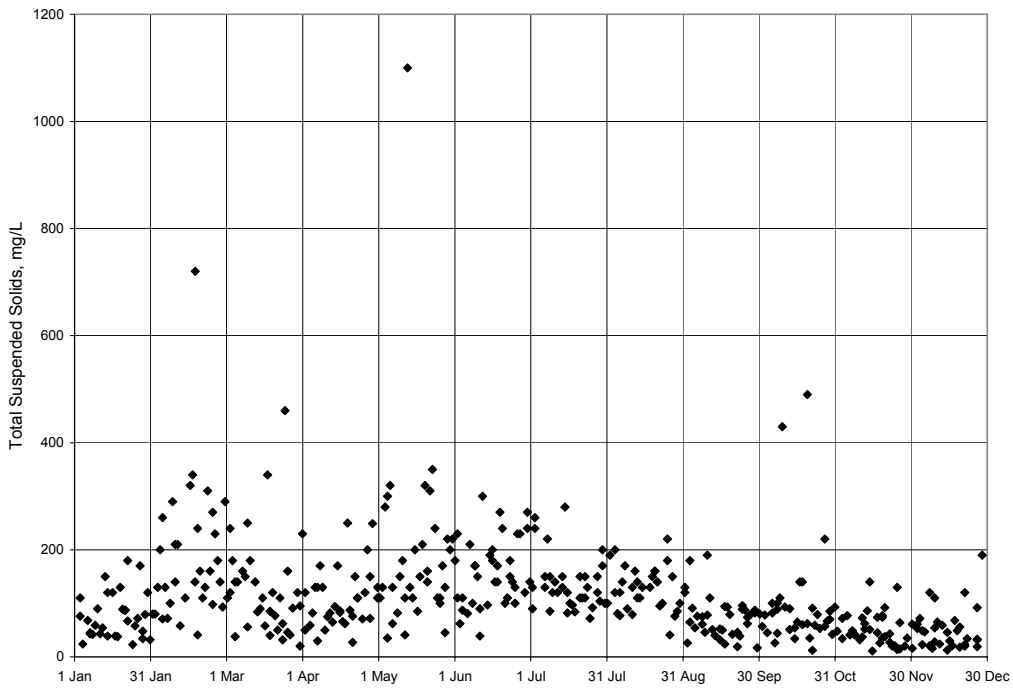

Figure 22. Suspended solids in bypass flow by day of year.

The planned pretreatment is conventional—i.e., rapid mix, flocculation, sedimentation, and dual media (12 inches of anthracite over 24 inches of sand) filtration. This filter bed is like that used in the RO pilot plant testing. Because the concentration of suspended solids in this water is high, sedimentation follows flocculation and precedes the filtration. A reasonable alternative to this pretreatment would be microfiltration, which produces a more reliable water quality but at greater cost. The pretreatment train is diagrammed in figure 23.

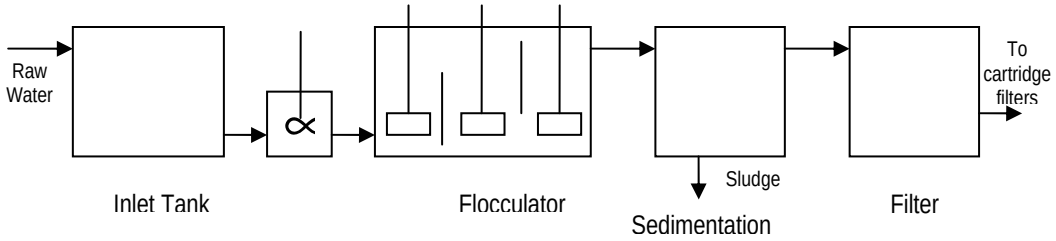

Figure 23. Line diagram of pretreatment for the Northerly Area.

The filters would be backwashed with filtered water which would require disposal. Using the data from modeling reuse operations (year 2002 flow data) for a basis, filters would run from approximately November 6 to March 21. Calculated volume of backwash water is 34,650,000 gallons per year. This would

contain a total of 929,000 pounds of solids (dry weight). The composition of the solid material is unknown, which makes prediction of its properties difficult. It is probably largely silica and calcite mixed with a variety of other minerals. It is not expected to have solids content greater than 35% (a measurement that needs to be verified in final design). At 35% solids, a year's worth of sludge would occupy approximately 35,000 cubic feet. The filter backwash is considered nonhazardous and would be returned to an 80-acre embanked plot in the reuse facilities. Subsurface tile drains would later collect this water, and it would be recycled back through the RO treatment plant (refer to the "Drainage Reuse Facilities" section of this appendix).

It is not certain that the RO feedwater conveyed from the reuse drainage sumps would require media filtration because passage through the soil in the reuse areas should have a similar effect to passage of water through beach wells or riverbank filtration systems, which have been shown to provide satisfactory filtration in several locations. The water may contain ferrous iron or may pick up some from the soil during passage through the reuse areas. There is the possibility of biological contamination of the water. There may also be some degradation of water quality in the pipeline and regulating tanks between the reuse areas and the desalting plants. Therefore, conventional pretreatment, as shown in figure 23, is conservatively assumed to be required for both RO feedwater flows that are conveyed from the open drainage ditches (i.e., reuse bypass flows) and flows that are conveyed from reuse drainage sumps.

Since the need for filtration may be unnecessary or seasonal, each pretreatment train contains a line that allows the flow to bypass the pretreatment when the water quality in the inlet tank, as measured by the SDI, is satisfactory for RO treatment without media filtration.

Cartridge Filters

Cartridge filters provide additional protection of the RO membranes in case of particle breakthrough in the conventional pretreatment system. A potential alternative to cartridge filtration would be bag filtration, which would occupy about the same area.

Siting of Equipment and Materials

The desalination racks, cartridge filters, pumps, and controls would be housed in an air-conditioned building. The inlet tanks and pretreatment system would be located on concrete pads outside the building.

Instrumentation and Control

The required instrumentation is shown in figure 24. The parameters to be measured and access points, roughly in process flow order, consist of the following for each plant: a water level indicator on the inlet tank; differential

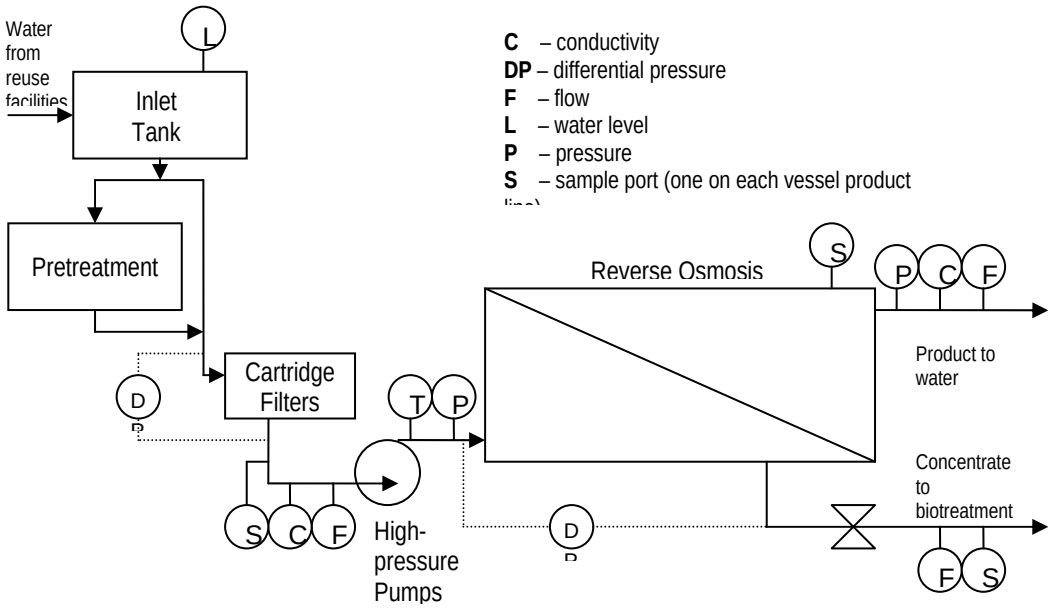

Figure 24. Reverse osmosis plant instrumentation.

pressure across the cartridge filters; sample tap, conductivity, and flow on the feed to the high-pressure pumps; temperature and pressure at the outlet of the pump bank; pressure, conductivity, and flow of product; and sample tap and flow of concentrate; differential pressure across the aggregate of pressure vessels in each rack; and a sample port on the outlet end of each vessel.

The control system would allow the operators to run the system from a centralized panel on which operational data are presented. The operating pressure would be set to maintain the level in the inlet tank relatively constant adjusting for the water temperature and the expected flow of feedwater to the plant.

A multiport sleeve valve would serve as the control valve. The setting of this valve would determine the recovery of the plant.

High-Pressure Pumps

To match the feedwater supply to the plant capacity, the high-pressure pumps would be variable speed pumps. Additionally, variable speed pumps will accommodate the expected variations of TDS in the RO feedwater. The effect of an increase, or decrease, in TDS is to increase, or decrease, the osmotic head that the high-pressure pumps must push against. Four pumps are supplied for each plant. The nominal capacity of the pumps is one-fourth of the nominal feed capacity of the plants. High-pressure pumps are run in parallel, feeding the aggregate of RO vessel racks—also run in parallel. Each pump or each rack can be isolated individually. This allows one pump or one rack to be removed from service for maintenance or repair during periods of

moderate demand without affecting the operation of the plant. This also eases the situation during the time when the capacity of the plant is being increased.

Reverse Osmosis Skids

Based on the pilot tests, the product water recovery assumed for these plants is 50%. Recovery is limited by the probability of formation of scale from several sparingly soluble salts, primarily calcium sulfate and calcium carbonate, either in the membrane elements or later in the downstream selenium biotreatment plant. It may be possible that a higher recovery could be obtained by use of advanced precipitation inhibiters; but until these have been demonstrated, the more conservative value, 50%, is used. Projections of the compositions of RO feedwater, concentrate, and product water streams are presented in table 18.

Operating temperature was calculated by fitting an assumed sinusoidal curve to data taken during testing of the RO and biotreatment pilot systems. This curve is shown in figure 25. The average temperature is 19 °C with a seasonal swing of ± 6 °C (66.2 °F ± 10.8 °F). The average occurs at approximately the ends of April and October. The average absolute deviation in temperature of all data points on figure 25 from the correlation line is 1.95 °C.

Temperature affects productivity. The effect of this seasonal variation on the productivity of the plants is shown by the green line, being an increase of 20% at the end of July and a decrease of 15% at the end of January. The units are assumed to have an operating fraction of 95%.

Other assumptions used in the calculation of plant performance were 4-year average life of membrane elements, 5-psi product pressure to provide net positive suction head (NPSH) for pumps to convey the product water to wherever it would be taken.

Based on the required treatment capacity, the plant would be based on the use of elements 8 inches in diameter and 40 inches long. With a recovery of 50%, the plants would be designed to desalt in a single stage. The stage would consist of RO racks arranged in parallel. Each rack would be 22 feet long and contain 14 pressure vessels. Each pressure vessel would house six RO membrane elements fed in series.

The only chemical addition is antiscalant, assumed to be at a concentration of 6 milligrams per liter (mg/L) based on pilot studies. Given the chemical composition of the feedwater, the principal scalant of concern is calcium sulfate. There is anecdotal evidence that particles of highly insoluble compounds, such as calcium carbonate and barium sulfate, can act as nucleation sites for formation of calcium sulfate. The particular antiscalant to be used should be evaluated during final design.

Table 18. Projections of RO feedwater, concentrate, and product water streams[1]

Northerly Area (portion of flow from the Reuse Drainage Sumps)

		Feed Flow	Reject Flow	Recovery	
	cfs acre-ft/yr[2] mgd	7.98 5,778 5.16	3.99 2,889 2.58	0.50	
Analyte	Units	Feed Concentration[3]	Rejection	Reject Concentration	Product Concentration
Conductance	µS/cm[4]	10,886		19,751.85	
Major Components					
Bicarbonate	mg/L	237	96.7%	462.46	11.54
Bromide	mg/L	8	98.0%	15.76	0.24
Calcium	mg/L	957	99.0%	1,899.72	14.28
Carbonate	mg/L	0	98.0%	0.00	0.00
Chloride	mg/L	1,815	98.0%	3,576.09	53.91
Magnesium	mg/L	266	99.5%	530.01	1.99
Nitrate	mg/L	145	88.5%	266.35	23.65
Potassium	mg/L	30.4	98.2%	59.99	0.81
Silica	mg/L	7.0	97.0%	13.69	0.31
Sodium	mg/L	1,980	98.2%	3,907.02	52.98
Sulfate	mg/L	3,534	99.5%	7,041.56	26.44
pH		7.5		7.65	6.80
Minor Components					
Ammonia	µg/L	3,300	95.0%	6,358.54	241.46
Aluminum	µg/L	0	95.0%	0.00	0.00
Arsenic	µg/L	31	98.0%	61.08	0.92
Boron	µg/L	30,000	90.0%	55,714.29	
		30,000	40.0%		20,769.23
Cadmium	µg/L	0	99.5%	0.00	0.00
Chromium	µg/L	22	98.0%	43.35	0.65
Copper	µg/L	13	98.0%	25.61	0.39
Iron	µg/L	0	99.0%	0.00	0.00
Lead	µg/L	18	99.0%	35.73	0.27
Manganese	µg/L	8	99.0%	15.88	0.12
Mercury	µg/L	1	98.0%	1.58	0.02
Molybdenum	µg/L	85	98.0%	167.48	2.52
Nickel	µg/L	20	99.0%	39.70	0.30
Selenium	µg/L	400	99.5%	797.01	2.99
Silver	µg/L	0	98.0%	0.00	0.00
Strontium	µg/L	0	98.0%	0.00	0.00
Zinc	µg/L	9	98.0%	17.73	0.27
TDS	mg/L	8,045			
TDS sum of ions		9,013		17,836	

Table 18. Projections of RO feedwater, concentrate, and product water streams[1] (continued)

Northerly Area (portion of flow bypassing the Reuse Areas)

		Feed Flow	Reject Flow	Recovery	
	cfs Acre-ft/yr[2] mgd	5.54 4,013 3.58			
Analyte	Units	Feed Concentration[3]	Rejection	Reject Concentration	Product Concentration
Conductance	µS/cm	6,154			
Major Components					
Bicarbonate	mg/L	170	96.7%	331.72	8.28
Bromide	mg/L	2.2	*98.0%*	4.33	0.07
Calcium	mg/L	290	99.0%	575.67	4.33
Carbonate	mg/L	*0*	98.0%	0.00	0.00
Chloride	mg/L	550	98.0%	1,083.66	16.34
Magnesium	mg/L	93	99.5%	185.30	0.70
Nitrate	mg/L	44	88.5%	80.82	7.18
Potassium	mg/L	9.2	*98.2%*	18.15	0.25
Silica	mg/L	35.0	*97.0%*	68.45	1.55
Sodium	mg/L	600	98.2%	1,183.94	16.06
Sulfate	mg/L	1,500	*99.5%*	2,988.78	11.22
pH		8.2		*8.35*	*7.50*
Minor Components					
Ammonia	µg/L	1,000	*95.0%*	1,926.83	73.17
Aluminum	µg/L	*0*	*95.0%*	0.00	0.00
Arsenic	µg/L	*31*	*98.0%*	61.08	0.92
Boron	µg/L	9,100	*90.0%*	16,900.00	
		9,100	*40.0%*		6,300.00
Cadmium	µg/L	30	*99.5%*	59.78	0.22
Chromium	µg/L	59	*98.0%*	116.25	1.75
Copper	µg/L	3.4	*98.0%*	6.70	0.10
Iron	µg/L	130	*99.0%*	258.06	1.94
Lead	µg/L	4.8	*99.0%*	9.53	0.07
Manganese	µg/L	2	*99.0%*	3.97	0.03
Mercury	µg/L	*1*	*98.0%*	1.58	0.02
Molybdenum	µg/L	*85*	*98.0%*	167.48	2.52
Nickel	µg/L	5.3	*99.0%*	10.52	0.08
Selenium	µg/L	1,200	*99.5%*	2,391.02	8.98
Silver	µg/L	*0*	*98.0%*	0.00	0.00
Strontium	µg/L	6,000	*98.0%*	11,821.78	178.22
Zinc	µg/L	240	*98.0%*	472.87	7.13
TDS	mg/L	4,000			
TDS sum of ions		3,311		6,555	

[1] Concentrations in green romans are from J. Yahnke memo, February 23, 2006. Rejections in black romans were determined from RO test at Panoche, Phase I. Rejections in blue italics were estimated.

[2] Flows are from R. Burnett memo, Drainwater Reuse Outflow, November 2, 2005. These numbers are based on the year 2002. Other years may be different. In particular, years 2003 and 2004 are considered "wet" years, and total annual flows are higher.

[3] Concentrations in orange italics are from the *San Luis Drainage Feature Re-evaluation Draft Environmental Impact Statement*, Appendix C, table C2-9.

The rejection for boron specified in this table, while low compared to that of other species, is high compared to the typical performance of an RO membrane. This rejection is significantly affected by solution pH, operating pressure, temperature, and membrane type.

[4] mgd = million gallons per day; µS/cm = microsiemens per centimeter.

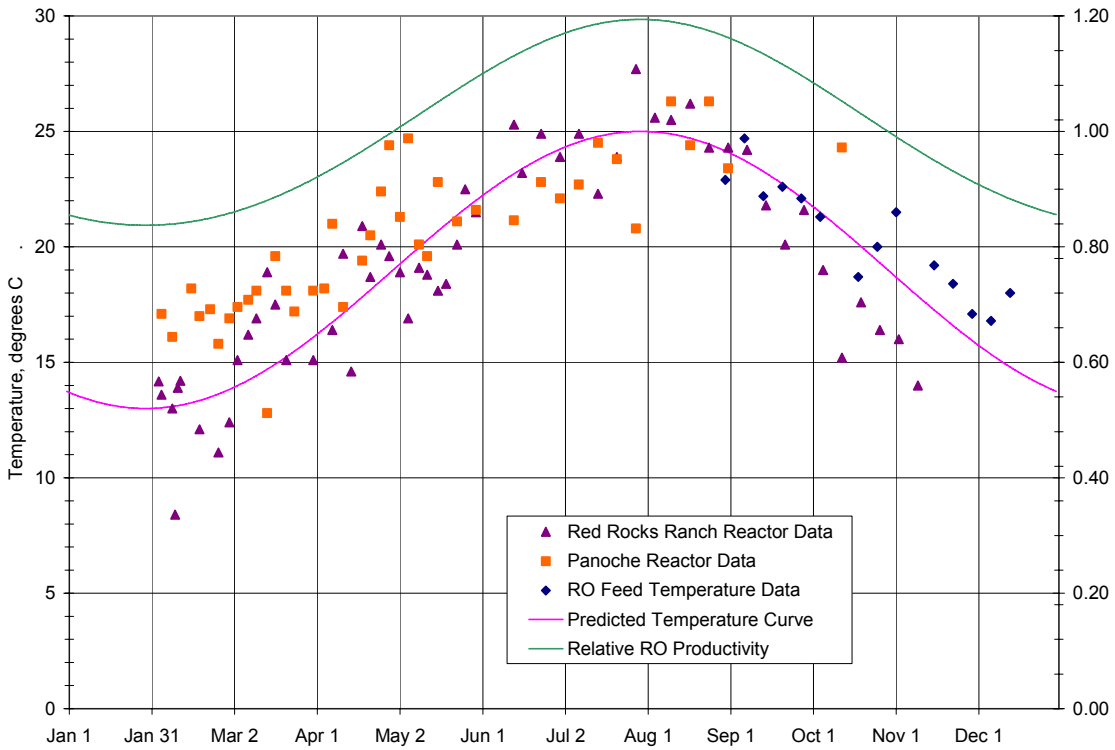

Figure 25. Expected RO feedwater temperature and relative productivity. (All temperatures left scale, relative performance right scale).

A system is included for periodic in-place cleaning of membrane elements. For cost estimation, the cleaning materials are assumed to be citric acid and sodium hydroxide. The cleaning frequency is assumed to be three times per year or every 4 months.

Preliminary design criteria, based on manufacturers design programs, are given in table 19.

Table 19. Preliminary design of RO skids

	Northerly Area
Feed Flow, gpm	variable
Product Flow, gpm	≤ 50%
Reject Flow, gpm	≥ 50%
Hydranautics LFC 3	
Vessels	176
Feed/Vessel	variable
Feed Pressure	variable
Permeate TDS, mg/L	~113

The particular membrane elements investigated represent a reasonable range of commercially available membranes, taking into consideration the composition of

the feedwater and the expected product water recovery. The low-pressure elements, Hydranautics ESPA 4 and Koch TFC-ULP, proved not to be suitable for this application. Identification of particular elements and manufacturers are not intended to imply selection of these or any specific membrane elements.

It is generally desirable to operate RO equipment as nearly continuously as possible. Plant shutdowns for more than a few hours can cause degradation of membrane element performance. Since the plant is to be operated at constant recovery, the capacity is required to increase as the volumetric flow of drainage to be treated increases.

Because there is negligible storage capacity in the reuse areas in the Northerly Area, this plant must be able to treat the quantity of water delivered to it. Consequently, the required flexibility for handling the expected flow variations must be designed into the operation of the desalination plant. The principal independent parameter is the operating pressure.

A set of performance curves for the plant designed for the Northerly Area is shown in figure 26. The plant relating to these performance curves contains 176 vessels, each containing six Hydranautics LFC3 elements. It has a maximum feed capacity of slightly more than 10,000 gpm. The treatment capacity of the plant can be adjusted to match the expected feed flow at the given temperature by adjusting the feed pressure. There are two limitations on any plant containing a

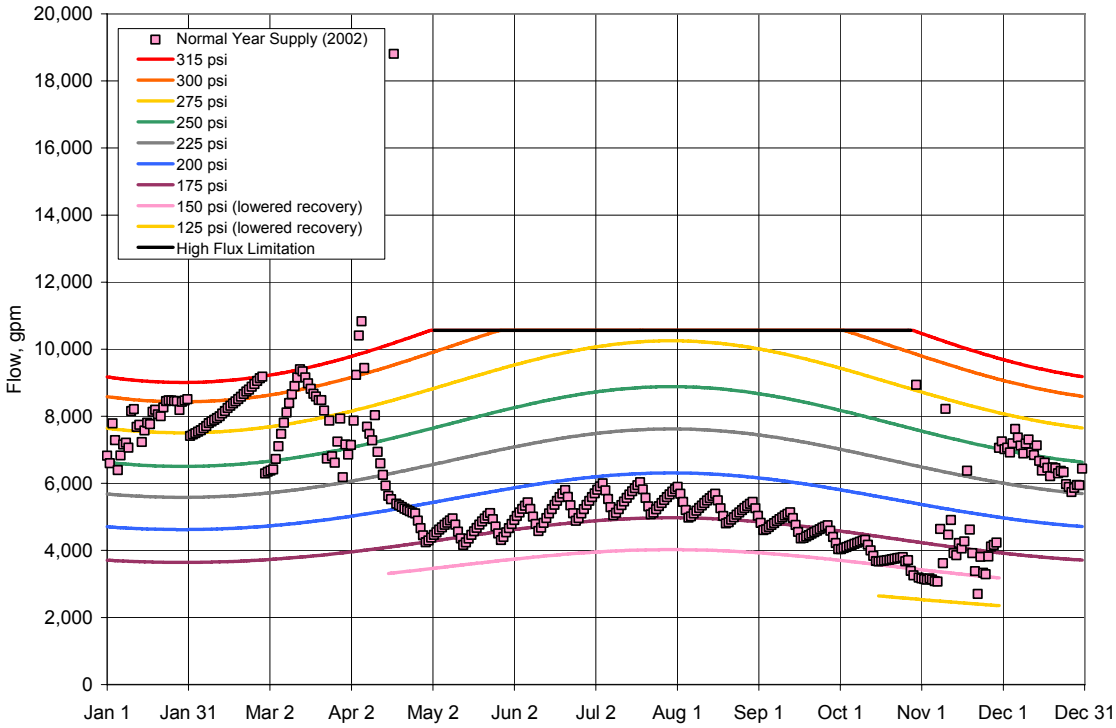

Figure 26. Northerly Area feedwater supply and RO treatment capacity (average year).

fixed number of elements. The upper limit for these elements is a flux of 18 gallons of permeate per square foot per day. This is represented by the black line in figure 26. The lower limit is 12 gpm of flow from the last element in a vessel. This corresponds to a minimum feed flow of 2,112 gpm. These limitations represent the conditions where the permeate flux is too high or the cross flow velocity is too low to avoid fouling of the membranes.

Superimposed on the performance curves for this plant, assuming the design temperature profile, are daily feedwater flows derived from reuse operation modeling using historical data for the year 2002, which is considered to represent an average flow year. Note that March would be the challenging period for high flows, and October to November would be the challenging periods for low flows. On several days—April 5, 6, and 18—there are spikes in flow. Spikes of this magnitude are clearly unpredictable. The plant would be unable to handle such flows.

We expect that wet years would occur from time to time. The years 2003 and 2004 are considered to be wet years. Data from 2003 and 2004 are superimposed on the performance curves in figure 27.

During the summer in wet years, which are assumed to occur 1 year in 5, there would be sufficient flow in excess of the plant's ability to treat that some accommodation must be made to handle this excess flow. This is a period of 3 to 4 months out of 5 years, or about 6% of the time. The provision made in this design is to have an extra rack of vessels in the desalting building. These vessels are to be empty most of the time and only contain installed elements when there

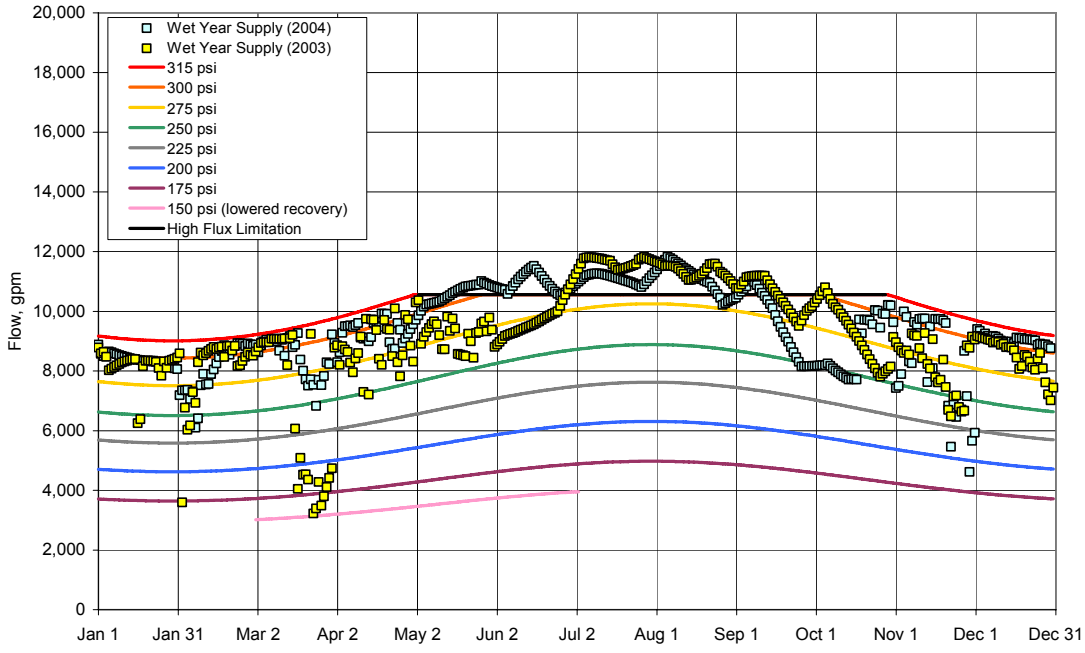

Figure 27. Northerly Area feedwater supply and RO plant capacity (wet years).

are strong indications there would be high flows. One strong indication would be high flows in April, when middle to low flows would normally be expected. When the high flow period is over, these elements, which would only have been used for a few months, can be used to replace older elements near the end of their useful lifetime. Other means of handling the excess flows during wet years probably exist.

Low flow conditions are more easily dealt with. If the feed flow drops below 4,224 gpm, the recovery of the plant can be reduced. This has the effect of increasing the reject flow. Alternatively, some of the product flow can be recycled to the feed of the plant, which produces essentially the same effect but with increasing equipment cost and operating complexity.

Expected variability in composition of the bypass flow is shown in figure 28 (data obtained from Station A flow records). Conductivity was measured on the same days and at the same location as the suspended solids shown in figure 22. Unfortunately, the highest variability occurs during the time of year when the drainage flow bypasses the reuse areas.

Product Water

RO product water would be conveyed and discharged into nearby freshwater irrigation canals. Preliminary information indicates that a National Pollutant Discharge Elimination System permit would not be required for this discharge;

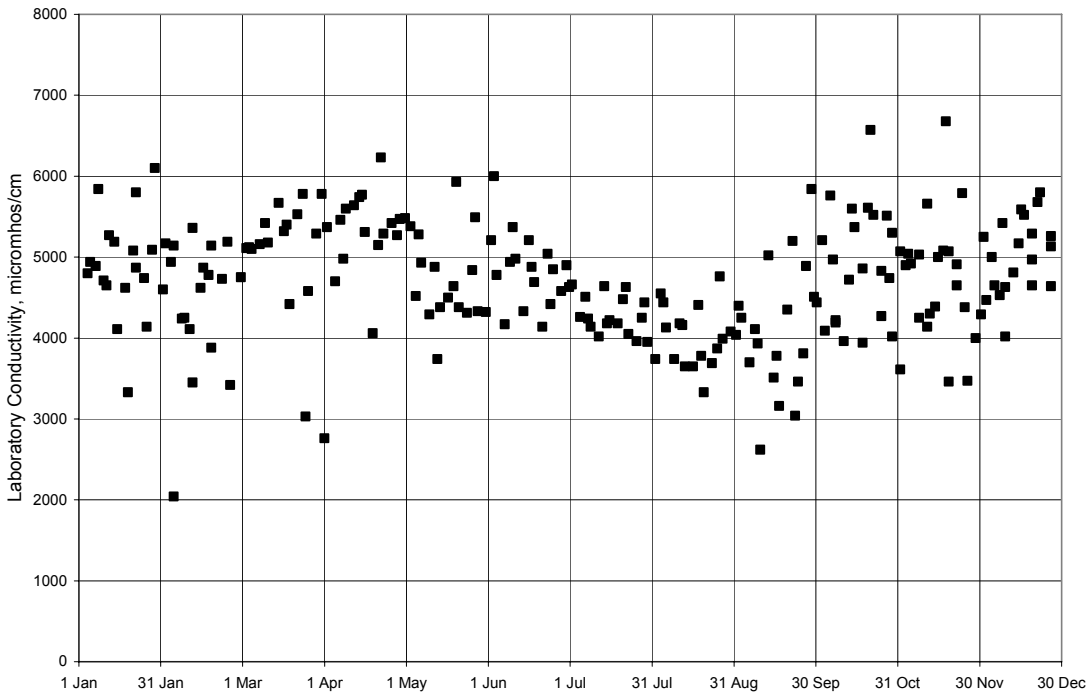

Figure 28. Conductance of bypass flow by day of year.

therefore, it is assumed that post-treatment operations are not required. However, boron is a contaminant of concern because it can potentially impact agricultural productivity. Boron rejection by the RO membranes can potentially range from about 40 to 90% depending upon the membrane selected in final design. At 40% rejection, the boron concentration in the product water may be as high as 23 mg/L. Based upon a review of water quality and quantity in the nearby freshwater irrigation canals, it is assumed that product water blending with the irrigation water will reduce the overall concentration of boron to less than 1 mg/L, which is acceptable for commercial crop production.

Alternatively, a boron removal system can be installed. One possible system is an ion-exchange bed containing Amberlite™ IRA743 resin. The cost of this type of system is not included in the cost estimate.

The design for RO product water distribution assumes that it would be conveyed via gravity to the Outside Canal, which is adjacent to the RO treatment plant. The design also assumes that during 2 months per year, the Outside Canal would be taken out of service for annual maintenance and repairs. During this 2-month period, a sump and sump pumps are required to divert the RO product water to the nearby DMC.

The local districts report that the Outside Canal is normally taken out of service during the nonirrigation winter season. Based on the water temperature data between November 1 and February 28, the maximum quantity of product water anticipated from the RO plant is 12.25 cfs, and the minimum flow would be approximately 2.23 cfs. Three identical 4.29-cfs fixed speed vertical turbine pumps would be used to pump the water to the DMC. Since the RO treatment process reduces the alkalinity of water, the product water would be corrosive to metals; therefore, stainless steel bowls and impellers are assumed. During the final design, further study would be required to identify the most cost-effective material for the three pumps.

Concentrate Disposal

The RO concentrate would be conveyed to the biotreatment plant for selenium removal prior to disposal in evaporation ponds. A short, gravity flow, buried pipeline between the two plants is included in the cost estimate.

Cost Estimates

RO treatment plant costs were estimated using Reclamation's *Water Treatment Estimation Routine* and WTCost©. These cost estimates do not meet the level of detail and accuracy prescribed by Reclamation's guidelines for feasibility level cost estimates. The cost estimates for the RO treatment plant are considered to be appraisal level.

Costs are indexed to April 2006 and are generally rounded to the nearest $100. Certain design assumptions that the user cannot change are incorporated in WTCost©, which is a costing program, not a design program. These assumptions are not always the same as the information from the manufacturers' design programs, so some details are not entirely consistent between the plant designs and the plant cost estimates.

The cost program requires water composition input to be chemically balanced. Since the data presented earlier in table 17 do not balance chemically, the total concentration of cations being greater than the total concentration of anions, some adjustments were made in these concentrations. It is not clear which components were in error. To provide chemical balance, the values shown in table 20 were substituted for concentrations of sodium, chloride, and sulfate.

Table 20. Values substituted to obtain ion balance

Items	Northerly Area (mg/L)
Sodium	1,855
Chloride	1,950
Sulfate	1,939

Procurement and Construction

For simplification of logistics and operation, the most effective and economical process would be to procure the construction of the plants for the Northerly Area and the Westlands under a single contract that emphasized uniformity of equipment and controls among the plants. Desalination plants are commonly constructed as turnkey units from pretreatment to post-treatment.

The plant for the Northerly Area should be constructed with completion (i.e., the plant ready to run, scheduled for the same time as the water supply systems are in place). This assumes that the feedwater delivery system and the systems to receive the concentrate and the product water are in place and operable when the plants are completed.

Selenium Biotreatment Plant

This section describes the biotreatment of RO concentrate containing high levels of selenium and nitrate.

General Description

The heart of the system is the ABMet® selenium biotreatment cells. Multiple trains of two cells in series would be utilized. Each train would treat a maximum

feed flow of 285 gpm. To achieve the required selenium removal efficiency, an empty bed contact time (EBCT) of 12 hours would be used. Each cell (40 feet long by 16 feet wide by 32 feet high) would have a 22-foot-deep bed of media. Pilot testing by ZENON determined that ABMet® technology could remove selenium and nitrate to below 10 micrograms per liter (µg/L) and 10 mg/L, respectively. Therefore, these values were used for the design effluent targets.

The biotreatment main process includes a feed tank, bioreactor trains, and oxidation tank(s). The backwash mode process flow includes the backwash water storage tank and backwash clarifier. Ancillary systems include nutrient feed, sludge dewatering, and odor control biofilter beds. One of the more important of these ancillary systems is the nutrient material that is used as a carbon source for the micro-organisms in the bioreactor cells. Since the nutrient material is quite viscous, the nutrient system is arranged so that a continuously recirculating supply of nutrient material is available at each bioreactor cell.

The bioreactor cleaning is done by backwashing. A backwash clarifier provides capacity to contain a 20-minute backwash from any bioreactor cell. The intended operation of the backwash clarifier is to provide gravity solids separation, which is anticipated to require less than 24 hours. After gravity separation is complete, a sludge pump would remove the settled solids to the dewatering system.

The dewatering system would use a belt press which is expected to produce waste solids with a total solids content of 30-40%. At this concentration, the solids would be in the form of a cake and not a liquid. Title 22 of the California Code of Regulations (section [§] 66261.24) defines acceptable quantities of selenium associated with solids as less than 100 parts per million. Since selenium concentrations in the wasted solids would have over 2,000 parts per million, the wasted solids are defined as hazardous and, as such, must be disposed at a Class 1 hazardous waste landfill. The closest Class 1 landfill is the Kettleman Hills Landfill in Kings County.

The proposed biotreatment location soils would require the concrete tanks be supported on pile foundations. The concern for the corrosive nature of the liquids prompts special concrete tank design using type V cement, admixtures, and interior lining. Metals in contact with the water would also be corrosion resistant.

An administration building is included in the layout. The administration building layout includes a reception area, lab, office, control room, breakroom, restroom/shower, electrical room, garage, and utility room. The building is a single level metal building with insulated metal panel walls having a floor area of approximately 2,500 square feet

Two other buildings enclose the mechanical and dewatering equipment. These buildings would also be constructed using steel frames and metal panel wall construction. The area contained between the biotreatment trains (gallery) would be enclosed with a roof.

The Northerly Area biotreatment plant layout is shown on drawing 805-D-10457. The biotreatment plant would be co-located with the RO treatment plant and evaporation pond (refer to figure 19).

Unit Process Sizing

The design of selenium biotreatment plants is based on a modular concept. Plants of varying size have a varying number of two-stage treatment trains to accommodate the plant design flow, but the remaining components are the same.

General Process Description

Each treatment train consists of two bioreactor cells in series that are designed to remove selenium from the feed stream. First stage and second stage cells are identical internally. Each train of two cells is identical to every other train of two cells. Only the common feed and filtrate headers that supply the trains vary as plant size changes. The feed and filtrate pumps are sized according to plant design flow, but full redundancy is provided in all cases.

Since every individual cell is identical to every other cell, and the frequency between backwash operations is expected to be approximately monthly, the backwash facilities for all the plants are identical, and the only variable would be the frequency with which the backwash system is operated. A second backwash clarifier is provided for those times when two backwash operations may occur on the same day. However, only one backwash storage tank is provided, since the tank would be refilled in less than 36 minutes at the plant's production rate of 5,000 gpm.

The normal flow pattern through each cell is from top to bottom. Since most of the active biological solids reside in the portion of the media that first sees the nutrient, most of the gas production (primarily carbon dioxide and nitrogen gas) occurs in the first few feet of travel through the media. Pilot testing has shown that when the active media is on the bottom of the cell, the gasses tend to form large bubbles before attaining enough buoyancy to be forced up through the media. The large bubbles are disruptive and tend to carry solids into the filtrate. By keeping the most active part of the bed at the top, the gas bubbles have a shorter path to the surface and do not pass through the full depth of the bed. The media below tends to continue filtering the solids and prevents them from entering the filtrate. With the active biological solids near the top of the media, this also permits using an intermittent low-rate backwash to help dislodge the gas bubbles before they become too large.

Provisions for Flow Variation

Each cell has a dedicated recycle pump that maintains a constant feed flow through the cell. This flow rate is optimized to provide for proper distribution through the feed and filtrate laterals and provides the optimum surface loading rate (SLR) for the process. Feed flow to each train is variable over the full range of zero to maximum design flow rate, since the feed flow is injected into the

recycle stream on the inlet side of the cell and an equal amount of filtrate is removed from the recycle stream on the outlet side of the cell. Under normal operations, it is anticipated that all of the available trains (including redundant trains at the smaller plants) would operate with the load split approximately equally among the trains.

When operating at flows less than design flow, the contact time increases; and the system should provide at least equal removal efficiency but, more likely, better removal efficiency.

A new cell that has no attached growth established can be left idle indefinitely. Once inoculated, the biological population needs to have a periodic nutrient "feeding" to remain healthy. The recycle pump needs to operate during the "feeding" to distribute the nutrient throughout the media, but no new flow necessarily needs be added to the cell. During startup or extended periods of low flow, it may be advantageous to leave some cells idle until needed; but once inoculated, the total plant flow should be split among all the inoculated cells. There are no disadvantages to operating at flows less than design flow which eliminates the need to periodically feed an idle, but inoculated, cell.

Detailed Process Description and Sizing

The design criteria for selenium removal in a biological reactor have been developed from pilot plant testing. Previous pilot testing used hydraulic retention time to size the reactor, which is inaccurate due to solids loading/accumulation within the system, thus changing the hydraulic retention time over time. Since the geometry of the media particles and the volume occupied by the attached biological growth can cause confusion and a continuously changing liquid volume, the design criteria are expressed in terms independent of these variables.

Surface Loading Rate

The SLR is a flux rate defined as the volume of flow across the filter bed horizontal surface area. The SLR is a balance between maintaining a high enough velocity through the media to provide for good distribution, but at the same time maintaining a low enough velocity to avoid stripping the attached growth from the media. A low velocity would cause the flow to travel preferentially through the channels that offer the least resistance to flow. If a preferential flow channel is established, the velocity in the channel increases, causing stripping of the media and creating an even more preferential flow channel. The result is a phenomenon known as "rat-holing." Higher velocities tend to discourage "rat-holing." Extremely high velocities, however, could strip the attached growth from media, washing away the bacteria that are needed for selenium removal and nitrate reduction.

Pilot plant testing has shown that an SLR of 0.5-0.6 gpm per square foot (gpm/ft^2) offers a good compromise between the competing factors favoring a high velocity and a low velocity. Since the SLR is based on physical properties, it is

independent of removal efficiency (with the exception of the possible stripping of attached growth at high velocities). Removal efficiency is based on the volume of media required to achieve a specified removal level as described below.

Empty Bed Contact Time

EBCT is defined as the volume of the filter that would be occupied by the media with its attached growth divided by the feed rate. EBCT is based on pilot plant testing and varies with the removal efficiency required. The higher the removal efficiency required, the longer the flow needs to stay in the filter media and the longer the EBCT. EBCT is based only on the volume occupied by the biologically active media and excludes the water column above the media and the water in the support gravel. With the appropriate conversion factors, the EBCT is expressed in hours.

By definition, EBCT removes the physical variables associated with media size, shape, and void volume and eliminates the amount of attached growth as a variable. In those cases where multiple cells in series are used to constitute a train, the EBCT is based on the total volume to be occupied by media in all of the cells. Since the volume of media in the bed is approximately 50% voids, a hydraulic retention time of 6 hours (which is based only on void volume) is essentially equivalent to an EBCT of 12 hours.

Design Example

The proposed Northerly Area biotreatment plant would have multiple trains of two cells in series. Each train would treat a maximum feed flow of 285 gpm. To achieve the required selenium removal efficiency, an EBCT of 12 hours would be required.

Based on maintaining a practical cell depth, a media bed depth of about 20-22 feet would be utilized. For a feed flow of 285 gpm and a 12-hour EBCT, the required bed volume is:

$$\textit{Bed volume} = \frac{285\ \text{gpm} \times 12\ \text{hr} \times 60\ \text{min/hr}}{7.48\ \text{gal ft}^3} = 27{,}433\ \text{ft}^3$$

Split equally between two cells, the required bed volume for each cell is:

$$\textit{Volume/cell} = \frac{27{,}433\ \text{ft}^3}{2\ \text{cells}} = 13{,}717\ \text{ft}^3\text{/cell}$$

For a media depth of 22 feet, each cell would need an area equal to:

$$\textit{Cell area} = \frac{13{,}717\ \text{ft}^3}{22\ \text{feet}} = 624\ \text{ft}^2$$

Based on arraying all of the valves and equipment in a common gallery and using common wall construction between cells, cells would be configured to be two to

three times as long as they are wide. If a length to width ratio of 2:5 is used, a cell that is 16 feet wide by 40 feet long would provide a cell area of 640 feet and would require a media bed depth of 21.43 feet.

$$\textit{Bed depth} = \frac{13{,}717\ ft^3}{16\ feet \times 40\ feet} = 21.43\ feet = 21\ feet\ 5\ inches$$

To achieve an SLR of 0.55 gpm/ft^2 in each cell, a cell feed rate of 350 gpm would be required. Therefore, the cell recycle pump would be rated for 350 gpm, and the feed flow would vary from 0-285 gpm.

$$\textit{Cell feed rate} = 0.55\ gpm/ft^2 \times 640\ ft^2 = 352\ gpm$$

Pilot plant testing has shown that a backwash is necessary to effectively remove accumulated solids. Based on carbon manufacturers' recommendations, a flow rate of 14 gpm/ft^2 (maximum) is required to achieve suitable bed expansion and solids removal. For a cell with a surface area of 640 square feet, 8,960 gpm would be required for backwash.

$$\textit{Backwash volume} = 640\ ft^2 \times 14\ gpm/ft^2 = 8{,}960\ gpm$$

Storage capacity for a 20-minute duration backwash would require a 179,200-gallon storage tank. Likewise, a clarifier designed to collect and hold a full backwash for an extended period of time would also require a volume of 179,200 gallons.

$$\textit{Storage volume} = 8{,}960\ gpm \times 20\ min = 179{,}200\ gallons$$

A 30% bed expansion for 21.43 feet of media would require that at least 6.43 feet of freeboard be provided between the top of the media and the backwash collection troughs.

$$\textit{Freeboard} = 21.43\ feet \times 30\% = 6.43\ feet = 6\ feet\ 5\ inches$$

The total cell height must also include an allowance for the plenum and false floor below the media (16 inches) and freeboard above the flush waste troughs (2.5 feet). Therefore, the cell wall height would be about 32 feet.

$$\textit{Cell height} = 21.43\ feet + 6.43\ feet + 1.3\ feet + 2.5\ feet = 31.66\ feet$$

First and Second Stage Bioreactor Cells

Each first and second stage bioreactor cells contain a media onto which active microbes are attached, feed pipes with distribution orifices, filtrate pipe with distribution nozzles, backwash piping with distribution nozzles, backwash waste pipe with distribution orifices, support gravel, freeboard for bed expansion, additional freeboard for an emergency overflow pipe, an fiberglass reinforced plastic (FRP) cover, support brackets for the piping, and special concrete

protection materials and coatings. All of the first and second stage bioreactor cells are identical internally regardless of the overall plant design capacity.

The physical dimensions of each cell are 16 feet wide by 40 feet long by 32 feet deep. The surface area is 640 square feet, with a 21.43-foot media depth; the bed volume is 13,717 cubic feet. The cell's SLR is 0.55 gpm/ft^2 based on a constant feed rate of 350 gpm.

A bioreactor train consists of a first stage bioreactor cell and a second stage bioreactor cell operating in series. Since the volume of media in each cell is 13,717 cubic feet, the total volume of media in a two-stage bioreactor train is 27,434 cubic feet. The train is rated for a 12-hour EBCT at a feed rate of 285 gpm.

The number of bioreactor trains sets the plant's design capacity. Each bioreactor train can treat flows that range from 0–285± gpm. Table 21 shows operating scenarios for the trains for each of the design flow scenarios.

Table 21. Bioreactor design flows

Plant Location	Flow Condition	Flow (acre-ft/yr)	Flow (gpm)	Trains[1]
Northerly	Peak 24 hr[2]	8,050	5,000	17 at 294 gpm or 18 at 278 gpm
	Wet year	5,873	3,648	13 at 281 gpm or 18 at 203 gpm
	Average year	4,758	2,955	11 at 269 gpm or 18 at 164 gpm

[1] Plant can either have a redundant train or can split the flow between remaining trains during backwash or maintenance. This is possible since the hydraulic flow through each cell can be as high as the recycle flow rate of 350 gpm.
[2] Maximum 24-hour flow rate.

The Northerly Area biotreatment plant would have 18 bioreactor trains, each rated to treat 278 gpm based on the maximum 24-hour flow rate. Normal and wet year flows would allow using fewer trains. Table 21 illustrates that only 11 of the 18 trains are required during normal flow conditions. Actual operations would likely use an additional train to account for train(s) out of service during backwashing or maintenance. Even during maximum 24-hour flow, a backwash operation can be accommodated by routing the feed flow so that the remaining 17 bioreactor cells treat one-seventeenth of the feed flow at 294 gpm each.

Feed Tank

The feed tank provides a point of common collection for the source water, clarifier supernatant, dewatering return streams, and process drains. The feed tank is intended to operate within a normal operating band and provides positive head for the feed pumps.

The physical dimensions of the feed tank are 18 feet in diameter by 18 feet deep. The normal operating water depth is 16 feet, providing a 30,000-gallon operating volume.

The feed tank is constructed of reinforced concrete with special provisions for the high level of chlorides in the feed. All concrete within the feed tank is coated with a waterproof coating that is applied after the concrete has cured to prevent chlorides from reaching the reinforcing steel.

The feed tank cover is intended to prevent birds and other wildlife from coming in contact with the source water. Unlike the bioreactor covers, the cover is not required to contain potentially toxic or combustible gases. There is no internal equipment, pipes, nor supports in the feed tank.

Nutrient Tank

The nutrient tank stores the material used as a carbon source for the micro-organisms in the bioreactor cells. Since the nutrient material is quite viscous, the nutrient system is arranged so that a continuously recirculating supply of nutrient material is available at each bioreactor cell. The injection system of small diameter pipes and meters for individual bioreactor cells is very short.

The nutrient tank capacity varies between plants. The tanks are designed to contain 5 days of nutrient at a conservative consumption rate of 0.4 gallon per 1,000 gallons treated plus a full tank truck (of approximately 5,000 gallons). In other words, there is always at least 5 days of supply remaining when a truck is expected. The required nutrient tank capacity for the Northerly Area biotreatment plant is 16,700 gallons.

The nutrient tank is located in the mechanical room to keep the nutrient material warm enough so that it can be pumped to the bioreactor cells. The nutrient tank is constructed of cross linked polyethlylene (XLPE). In keeping with the modular theme, all of the nutrient tanks would be the same size. A 12-foot-diameter tank, 10 feet high, would hold 8,400 gallons with about 8 inches of freeboard. The Northerly Area plant would have two nutrient tanks.

Aerobic Post-Treatment

The purpose of aerobic post-treatment is to remove biological oxygen demand and to convert residual selenium and sulfur to oxidized, inorganic species in the treated effluent. The aerobic post-treatment would be of the concrete aerobic basin type with submerged aeration headers and multistage centrifugal blowers for supplying the aeration air.

Process Description

Aerobic post-treatment is intended to oxidize reduced sulfur and selenium compounds. These compounds are typically quite odorous and, if not treated, can be expected to create odor at the evaporation ponds. Sulfur oxidation is a demonstrated method for minimizing odors in anaerobic digester effluent.

Reduced sulfur compounds in solution are oxidized in a biologically mediated process in a chemostat—a flow-through, mixed reactor with no recycle and no liquid/solids separation. The bacteria responsible for the biological mediation are ubiquitous, and the chemostat is sized to provide sufficient time for the process to take place, approximately 8 hours HRT.

Process Flow Path

Filtrate from the bioreactors would be collected in the backwash storage tank. The backwash storage tank would normally remain full and is unoxidized, since backwash water needs to be low in dissolved oxygen to prevent upsetting the anaerobic conditions in the bioreactors. A high level overflow from the backwash storage tank would route flow by gravity to the oxidation tank(s). Multistage centrifugal blowers would provide aeration air through a full-floor-coverage array of membrane diffusers in the oxidation tanks. It is anticipated that dissolved oxygen would be measured in the oxidation tanks and used to modulate the blower suction valve to match air delivery with oxygen demand. A high level overflow from the oxidation tank would route flow by gravity to the evaporation ponds.

Aeration Design

Selenium biotreatment reactor effluent would contain residual soluble chemical oxygen demand and small quantities of reduced sulfur compounds. To reduce odor emissions, air is provided in the aeration tank that facilitates oxidation of the soluble residuals. The aeration system design is sufficient for up to 85 mg/L of reduced sulfur (expressed as S) and up to 50 mg/L of oxygen demand from residual chemical oxygen demand and nitrogen. This calculates to be approximately twice the air flow requirement for mixing or 2 x 0.12 Scfm/sf.[1] Note that to keep from overloading the aeration tank, the reduced sulfur has to be controlled to less than 85 mg/L (as S) by not over-feeding the biotreatment reactors. Oxidation of the minute amounts of reduced selenium is estimated to occur simultaneous with sulfide oxidation.

The aeration blowers are multistage, centrifugal style blowers with constant speed motors, motorized inlet throttling valves, and blower protection control panels from the factory. The minimum rise to surge pressure is 0.85 psi (grams).

Fine bubble-diffused aerators provide oxygen for biological reactions in post-treatment aeration tanks. Rubber (i.e., membrane) diffusers are preferable to ceramic diffusers in aggressive environments.

Backwash Clarifier

The backwash clarifier provides capacity to contain a 20-minute backwash from any bioreactor cell. The backwash clarifier provides for gravity separation for 24 hours (assumed to be a maximum but can be longer if not required for

[1] Air flow requirement for mixing.

subsequent backwash). After gravity separation is complete, a sludge pump would operate to remove the settled solids to the dewatering system. A multihopper bottom in the tank would allow the settled solids to be pumped to dewatering. Once the solids are removed, the same pump would pump the relatively clear supernatant to the feed tank for re-processing.

The physical dimensions of the clarifier are 45 feet in diameter by 13.5 feet side water depth. An additional 2 feet of freeboard is provided for a total wall height of 15.5 feet. The floor is sloped at 3 inches per foot to a center hopper. The total volume of the backwash clarifier is 181,400 gallons, which exceeds the 179,200 gallons generated during a backwash. Two backwasher clarifiers are provided in the Northerly Area plant.

The clarifier is constructed of reinforced concrete with special provisions for the high level of chlorides in the backwash waste. All concrete within the clarifier is coated with a waterproof coating that is applied after the concrete has cured to prevent chlorides from reaching the reinforcing steel.

Backwash Storage Tank

The backwash storage tank provides storage capacity for a 20-minute backwash for any bioreactor cell. During normal operation, the backwash storage tank remains full. After a backwash operation, the backwash storage tank is refilled by the filtrate pumps. These are the same pumps that pump from the filtrate tank to the evaporation ponds.

The physical dimensions of the backwash storage tank are 45 feet in diameter by 18 feet deep. The normal operating water depth is 16 feet, providing 190,000 gallons of backwash water which exceeds the 179,200 gallons required for a backwash operation.

The backwash storage tank is constructed of reinforced concrete with special provisions for the high level of chlorides in the filtrate. All concrete within the backwash storage tank is coated with a waterproof coating that is applied after the concrete has cured to prevent chlorides from reaching the reinforcing steel.

Because there is no active biological process in the backwash storage tank, and the selenium levels have been reduced to safe levels, the backwash storage tank is not covered. There is no internal equipment, pipes, nor supports in the backwash storage tank.

Recycle Pumps

The recycle pumps are sized to provide a constant 350± gpm of flow through the cells. The constant flow rate is set to optimize the SLR through the media (0.55 gpm/ft^2), to optimize the performance of the static mixers, and to optimize distribution within the cell. The fixed flow rate permits varying the feed flow rate to each train through the full range of 0 to 285 gpm (potentially up to 350 gpm per train if the contact time is decreased) with no degradation of system performance.

The recycle pumps are single stage centrifugal pumps with motors rated for 5 horsepower or less. The pumps are constructed of materials that are resistant to chlorides at the levels expected for this project.

Waste Solids Dewatering

Solids from the backwash clarifier would need to undergo additional thickening and dewatering prior to transport to a hazardous waste disposal site. All of the dewatering systems would be housed in buildings or enclosures that would prevent birds and other wildlife from coming in contact with the waste solids.

The amount of storage for dewatered solids may vary based on the availability of trucks to haul the waste solids from site.

The dewatering system would use a belt press which is expected to produce waste solids with a total solids content of 30-40%. At this concentration, the solids would be in the form of a cake and not a liquid.

Sizing Summary

The biotreatment system unit process number and size are shown in table 22. The preliminary layouts and plant designs are shown in attachment 1.

Table 22. Biotreatment sizing summary

Component	Size/Capacity
Plant Footprint Dimensions (length [L] feet x width [W] feet [ft])	500 x 280
Plant Flow (acre-ft/yr)	8,050
Plant Flow (gpm)	5,000
Plant Flow (million gallons per day)	7.20
Number of Bioreactor Trains	18
Number of Bioreactor Cells	36
Bioreactor Cell Dimension (ft)	40 ft L x 16 ft W x 32 ft H
Bioreactor Cell Surface Area (ft^2)	640
Bioreactor Cell Bed Volume (ft^3)	13,717
Feed Tank Volume (gal)	30,000 (nominal)
Feed Tank Dimensions (feet)	18 ft diameter x 18 ft H
Filtrate Tank Volume (gal)	30,000 (nominal)
Filtrate Tank Dimensions (ft)	18 ft diameter x 18 ft H
Number of Nutrient Tanks	2
Nutrient Tanks Volume (gal)	8,400 (nominal)
Nutrient Tank Dimensions (ft)	12 ft diameter x 10 ft H
Backwash Clarifier Volume (gal)	181,400
Backwash Clarifier Dimensions (ft)	45 ft diameter x 16 ft H
Backwash Clarifier Side Water Depth (ft)	14
Number of Backwash Clarifiers	2
Backwash Storage Tank Volume (gal)	190,000 (nominal)
Backwash Storage Tank Dimensions (ft)	45 ft diameter x 18 ft H

Table 22. Biotreatment sizing summary (continued)

Component	Size/Capacity
Number of Oxidation Tanks	3
Oxidation Tank Volume (gal)	800,000
Oxidation Tank Dimensions (ft)	89 ft diameter x 18 ft H
Recycle Pumps No. (Constant Speed)	36
Recycle Pumps Capacity (gpm)	350
Feed Pumps Quantity (Constant Speed)	2 (1 duty)
Feed Pumps Capacity (gpm)	5,000
Nutrient Pumps Number (Constant Speed)	2 (1 duty)
Nutrient Pumps (gpm)	5
Sludge Pump Quantity (Variable Speed)	2 (1 duty)
Sludge Pump (gpm)	60-300
Belt Press Dewatering Quantity	2
Belt Press Size (m)	2
Belt Press Capacity (gpm)	300
Drain Sump Pump Quantity	2 (1 duty)
Drain Sump Pump Capacity (gpm)	200
Backwash Pump Number (Constant Speed)	2 (1 duty)
Backwash Pump (gpm)	4,480-8,960
Oxidation Blower Quantity	4 (3 duty)
Oxidation Blower Capacity (cfm)	1,500
Foul Air Blower Quantity	3 (2 duty)
Foul Air Capacity (cfm)	7,800
Biofilter Quantity	2
Biofilter Capacity (cfm)	7,800
Biofilter Dimensions (ft)	100 L x 40 W x 2.5 H
Septic Tank Capacity (gal)	1,500
Septic Drain Field Area (ft^2)	6,050
Septic Drain Field Dimensions (ft)	110 ft L x 55 ft W
Septic Drain Replacement Area (ft^2)	6,050
Site Well Capacity (gpm)	40

Control Strategies

Cell Water Level Control

Water level is sensed in each bioreactor cell with a pressure sensor located in the gallery. The elevation of the pressure sensor plus the pressure reading yields the water surface level in the cell. A predetermined normal operating level is maintained in each cell by modulating a filtrate discharge flow control valve (FCV). As feed flow increases, the filtrate discharge FCV would modulate open to maintain the predetermined level. Feed flow can vary from 0 to 285 gpm (potentially up to 350 gpm per train if the contact time is decreased). The recycle pump maintains a constant ±350-gpm feed rate into the cell for optimum distribution, SLR, and static mixer performance.

During backwash, a predetermined backwash operating level is maintained in the cell by modulating a backwash waste FCV. The backwash operating level is set to be approximately 6 inches above the orifices on the top of the backwash waste pipes. The backwash waste system is intentionally surcharged to prevent air entrainment, which could oxidize the reduced selenium in the backwash waste if the flow were permitted to free-fall into the pipes.

Nutrient Addition

The in-line static mixers are located in the recycle loop for each cell so that they have a constant ±350 gpm through them for optimum mixing. The oxidation reduction probe (ORP) in the filtrate pipe from each cell is monitored and used to calculate the amount of nutrient required. The ORP reading is not used directly but contributes to the calculation. The nutrient is supplied by a recirculating nutrient system that makes a pressurized supply of nutrient available to each cell through a short supply line. The nutrient flow is initiated by opening a solenoid valve and is controlled by a diaphragm valve on the outlet of a nutrient supply magnetic flow meter. The amount of nutrient added is monitored by the flow meter; and when sufficient nutrient has been added, the solenoid valve is closed. If no cell is calling for nutrient, the operating nutrient feed pump is stopped. The pump is restarted as soon as nutrient is needed by any cell. The pressure regulating valve in the nutrient return header is adjustable to maintain backpressure in the nutrient loop.

Cell Headloss and Need for Backwashing

Pressure sensors on the inlet and outlet of each cell monitor feed pressure and filtrate pressure. The differential pressure across the cell is monitored and used to determine headloss across the cell. The need for backwash may be indicated by reaching a maximum headloss across the cell or when a backwash is required.

Feed Rate Control

Two feed pumps are provided to deliver a pressurized feed supply to the bioreactor trains. Each pump can deliver the full rated plant flow. The second pump is a redundant pump. Flow to each train is adjustable from 0 to 285 gpm (potentially up to 350 gpm per train if the contact time is decreased) by a magnetic flow meter and FCV in the first stage feed supply pipe.

Backwash

The backwash feed supply pump is rated to deliver between 4,480 and 8,960 gpm to each cell for backwash. Flow is controlled by a magnetic flow meter and FCV. Since a backwash is anticipated to be required only intermittently, there is no redundancy in the backwash system. The backwash waste flow is returned to a clarifier that is sized to hold the entire 20-minute backwash volume. After as much time elapses as is necessary (±24 hours) to settle the solids, a sludge pump is started to pump the accumulated solids to the drying beds. After the solids are removed, the same pump pumps the relatively clear supernatant back to the feed tank for treatment in the system. The backwash storage tank holds enough water

for a 20-minute forward flush operation. The backwash storage tank is filled with treated filtrate by the same pumps that pump filtrate to the evaporation ponds.

An intermittent low volume backwash through the cells may be required to dislodge accumulated gasses. The PLC would permit this flush to occur automatically at whatever rate and frequency may be required, since the backwash supply valve for each cell is automated. The duration of the backwash is intended to be brief so that the cell water surface does not rise to reach the backwash waste pipe orifices.

Foul Air
The foul air blowers remove potentially toxic and foul gasses from the head space above the reactors, the feed tank, and the clarifier. The gasses may contain toxic levels of hydrogen sulfide (H_2S) and methane in combustible quantities, as well as other foul-smelling gasses. The foul air is exhausted through a biofilter for odor control.

pH Monitoring
An in-line pH probe monitors the pH of the feed stream. There is no automatic response to pH level.

Recycle Pumps
The recycle pumps are sized to provide a constant ±350 gpm of flow through the cells. The constant flow rate is set to optimize the SLR through the media (0.55 gpm/ft^2), to optimize the performance of the static mixers, and to optimize distribution within the cell. The fixed flow rate permits varying the feed flow rate to each train through the full range of 0 to 285 gpm (potentially up to 350 gpm per train if the contact time is decreased) with no degradation of system performance.

Dewatering
The sludge pump is operated in variable speed to remove accumulated solids from the clarifier to the drying beds and to transfer supernatant back to the feed tank for subsequent treatment.

Structural Considerations and Construction Materials

Structural Considerations

Structural Criteria
The current design standard is the 2001 California Building Code (based on 1997 Uniform Building Code). Per Uniform Building Code, the plant locations are in seismic Zone 3. Wind load is based on 70 miles per hour (mph), exposure C. The 2003 International Building Code is applied in California. The code used for detailed design would depend on the agency having jurisdiction for the plant locations. It is recommended that site specific soil information be obtained prior to detailed design for each plant site to define the appropriate seismic design criteria.

Geotechnical

Site Conditions

Reclamation drilled several borings in the San Joaquin Valley as part of the feasibility data collection. Borings were drilled to depths ranging from about 30 to 50 feet below the ground surface in the general area and not at the proposed facility sites. Based on these borings, the subsurface soils in this area of the San Joaquin Valley generally consist of soft to firm or fat clay overlying interbedded loose sand and soft silt to the depth explored. The boring logs indicated that the groundwater depth, where recorded, ranged from 2 feet to 11 feet below the ground surface.

Preliminary Guidelines

Based on review of Reclamation borings, the following preliminary guidelines are provided for estimating costs of the proposed facilities.

Site Preparation

For estimating purposes, the areas under structures would be stripped from 2–2.5 feet below grade. If soils are soft and wet, a nonwoven geotextile (such as Mirafi® 600X, or equivalent) can be placed on native soils along with a gravel working surface to provide a working platform for construction.

Foundations

Pile foundations are recommended for supporting the proposed treatment facilities. Based on the general soil profile described above, a 12-inch-diameter pipe pile (or 12-inch-square concrete pile) founded at a depth of about 50 feet may be used for the static condition. The pile may be designed using an allowable axial pile capacity of about 50 tons. Minor appurtenant buildings, founded at grade may be founded on spread footings using an allowable bearing pressure of 1,500 pounds per square foot.

Site Dewatering

The partially buried facilities would likely require construction dewatering during construction. The only area that should require dewatering (or unwatering) is under the backwash clarifier.

Pavement Section

For estimating purposes, assume a pavement section of 3½ inches of asphalt, 6 inches of aggregate base, and 18 inches of 3-inch minus pit run gravel, with a geotextile on top of the excavated subgrade.

Additional Investigations

These guidelines are provided for estimating costs of the proposed facility. Recognizing that the borings were generally 2 to 3 miles from the proposed site and did not provide strength or compressibility data at the site, additional geotechnical investigations are necessary at these sites prior to development of

actual project plans. In addition to verifying the preliminary guidelines provided above, future investigations should address the liquefaction potential at each site.

Pile Support

Geotechnical investigations were completed using soil borings located within a few miles of each potential facility. The recommended construction based on a geotechnical review is to use 50-ton pile foundations for structures built on the surface (or buried) with either 12-inch-diameter concrete-filled pipe or 12-inch-rectangular precast concrete piles.

Local pile contractors were contacted to verify the assumptions. They suggested the use of precast concrete piles due to cost and constructability issues. Precast piles can be made with type V cement and corrosion inhibitors to reduce the influence of high salinity, chlorides, and sulfates in the groundwater.

The new prison, south of Mendota currently under construction, is using precast pile foundations on the main, multimillion-gallon water storage tank. Most of the piles at this location, and generally in the area, are 45 feet or less. Based on this information, the feasibility design cost estimate assumes 12-inch-rectangular precast concrete piles 60 feet in length. To confirm these assumptions, detailed site-specific geotechnical investigations would need to be completed for each site prior to final design.

Construction Materials

The corrosive characteristics of this water are unique. It appears the process water most resembles dilute sea water (high chloride, sulfate, and TDS content). During the treatment process, however, some of the sulfate may be converted to H_2S which could also be oxidized to sulfuric acid in the condensate in the gas space of the bioreactors and tanks. Outside air would be utilized to exhaust foul air from the gas space. For the purposes of evaluation, materials selection considers the corrosive effects of chloride, sulfate, H_2S, and sulfuric acid.

A series of coupon tests were conducted on the waters of the biotreatment pilot tests. Materials included carbon steel, 316L stainless steel, Hastelloy C276, and a variety of FRP samples utilizing different resins. Visual inspection of the nonplastic samples showed that carbon steel suffered minor corrosion, 316L stainless steel suffered from some crevice corrosion, and no visible corrosion was observed in the Hastelloy C276 sample. Although the exposure period was somewhat shorter than what most manufacturers would prefer, all resin coupons performed satisfactorily. If further pilot testing is planned, it is recommended that coupon testing be performed again to evaluate additional materials and corrosive effects of the gas space environment. It is also recommended that the pilot tanks be inspected to gain additional information as to how a painted steel tank might perform.

Concrete
Concrete tanks would be constructed to resist the corrosive characteristics of the water. The concrete would use type V Portland cement, which is designed for extreme sulfate resistance. Type V cement is specifically used in coastal construction where high sulfate is found in groundwater. Experience has shown that this is commonly used in coastal areas of the Pacific Northwest where some sea water intrusion has occurred. It was learned from contact at several concrete batch plants in the area that the standard mix design uses a type V cement. The mix design should also use a low water-cement ratio that would reduce water content and the potential for concrete corrosion.

In addition, a concrete admixture can be added for rebar corrosion protection. W.R. Grace Co., a leader in concrete admixture products, was contacted. For high chloride content waters and environments, a calcium nitrite admixture (Grace DCI®) is recommended. Calcium nitrite interacts with embedded rebar to prevent chloride attack. The final corrosion protection element would be an interior lining using a polyurea coating system, described in detail later in this section.

There is concern regarding concrete corrosion due to carbonation. The tanks' interior lining systems would limit potentially excessive levels of carbon dioxide formed in the bioreactors to react with concrete. Carbon dioxide levels outside the tanks would be atmospheric and would not cause significant corrosion. In addition, the detailed design would use mix design and construction methods to minimize carbonation (carbonation is less in concrete with low water-cement ratio, high cement content, long curing periods, and high strength). The depth of carbonation of good quality, well-cured concrete is generally of little practical significance.

Liner for Concrete Tanks

Concrete Tanks (Feed Tank, Bioreactor, Backwash Clarifier, Backwash Storage, Aerobic Post-Treatment)
External: No coating system is proposed. Tanks would be constructed above grade, and type V cement is proposed (for both walls and footings). Issues related to submergence in high sulfate groundwater have, therefore, been eliminated.

Internal: The following liner system is proposed. Interior concrete surfaces would first be prepared for coating using the following method—SSPC-13/ National Association of Corrosion Engineers No. 6, Surface Preparation of Concrete. All interior concrete surfaces would receive a liner system consisting of 60-80 mil[2] of an elastomeric coating consisting of 100% solids, pure polyurea coating. Repair concrete cracks, bugholes, and other defects with a 100% epoxy with manufacturer's recommended fillers to suitable paste consistency for

[2] Mil = one-thousandth of an inch or milli-inch.

horizontal and vertical application before applying epoxy conductive coat. The epoxy coating would continue across sealing surfaces (i.e., gasket surfaces, Link-Seals, and the like must contact coated concrete surfaces). A conductive primer would be used to allow coating system testing per ASTM D4787 (holiday test).

An example of this coating system from the Sherwin-Williams Company is as follows:

- General Polymers 3561 Epoxy Resin Glaze
- 4–6 mil DFT Corobond Conductive Epoxy Primer (General Polymers 3524 Epoxy Conductive Primer/Sealer)
- 60–80 mil DFT 100% solids, spray applied, aromatic polyurea coating (Envirolastic AR425)

The embedded HDPE system described in the Process Design Memorandum would not be used.

Bioreactor Cover

The cover shall be vinyl ester based FRP (ASTM D4097). The cover would be connected to the top of the wall using neoprene gaskets and epoxy-mounted Monel 400 anchors. The neoprene gasketing would help protect the anchors from exposure to the reactor contents. Gasketing for cover panel joints shall be EPDM.[3] The choice of these materials is a combination of past experience, manufacturer data, and a brief literature review.

The vinyl ester resins are sometimes used when high durability, thermal stability, and a specified corrosion resistance is required. In this instance, experience and manufacturer data indicate that vinyl ester based FRP would protect against chlorides, H_2S, and sulfuric acid that the cover could be exposed to. The cover would likely be fabricated in several pieces with an EPDM gasketed joint (50 Durometer). It is expected that the FRP cover would have a flanged base for connection to the wall using epoxy anchors. This connection would be neoprene-gasketed and epoxy-anchored to the concrete wall. The lining would extend over the top of the tank wall so concrete would not be directly exposed to the gas space of the reactor at this joint. Both neoprene and EPDM have been used in a number of anaerobic digester installations with no known corrosion issues.

In addition to experience, a survey of manufacturer data indicates that Monel 400, vinyl ester resin based FRP, epoxy, neoprene, and EPDM have good to excellent corrosion resistance to sea water, sulfuric acid, and hydrogen sulfide.

[3] Gasketing for cover panel joints (Ethylene-Propylene-Diene-Monomer).

Bioreactor Internal Supports
If FRP beams are allowed to be field cut, the exposed ends would be gel coated. Internal piping would be supported by FRP beams fastened to the walls using epoxy-mounted Monel 400 anchors. The liner system would be applied to the wall before the beams are placed. A sufficient area of the epoxy resistant to the environment would be provided around the anchors to allow the polyurea lining to carry over onto the epoxy, eliminating the possibility of fluid reaching the concrete; alternately, similar measures generally described in the National Association of Corrosion Engineers 6G197/SSPC-TU2, *Informational Report and Technology Update – Design, Installation, and Maintenance of Coating Systems for Concrete Used in Secondary Containment*, section 4.7.3, shall be employed. The HDPE pipes would be fastened to the beams using Monel 400 hardware.

Feed Tank and Clarifier Covers
The covers on the feed tank and clarifier would be constructed of vinyl ester based fiberglass. Each cover would have access manways and foul air ducts to carry potentially odorous air to treatment.

Nutrient Tank
The nutrient tank would be constructed of XLPE (ASTM D1998). Resin would be 100% virgin, ultraviolet-stabilized, 35 mesh, cross-linkable HDPE. Manufacturer data indicates XLPE has suitable resistance to molasses which is similar to the nutrient solution.

Solids Dewatering
Dewatering of selenium rich biosolids would be done with a belt filter press. A polyvinyl chloride (PVC) (ASTM D1785) static mixer would mix the sludge with polymer to assist in dewatering. The press frame would be constructed with tube sections using 316L stainless steel. The rollers would be coated by a nylon thermo-plastic Rilsan applied by a dipping method for corrosion protection. The belt material is a mono-filament polyester seamed material, supported by corrosion resistant, ultra-high molecular weight polyethylene wear bars. The belt would need replacement on a regular basis (defined in O&M). A wash-down hose would be provided to allow rinsing of the belt filter press after usage. Rinsing would clean the unit, particularly metal supports, of potentially corrosive materials.

Piping
Piping internal to the bioreactor and buried piping between tanks would be butt-fusion welded HDPE to avoid corrosion issues related to backing flanges. Above grade exterior reactor piping would be PVC or FRP, depending on the location and allowed limited thermal movement. PVC flex couplings would be used at fixed points (structures, pumps, etc.). All above grade piping would be indoors and exposed to limited sunlight and potential for ultraviolet degradation. In addition, PVC would be Schedule 80 which has a relatively thick wall and would

provide additional buffer for ultraviolet degradation. Both PVC and FRP have been used in anaerobic digester installations and have experienced no issues with these materials.

Above grade foul air duct (pipe) and blowers would be constructed with vinyl ester resin based FRP. Below grade foul air duct work would be HDPE. In addition to experience, a survey of manufacturer data indicates that PVC and HDPE have satisfactory corrosion resistance to sea water, sulfuric acid, and H_2S.

Recycle Pumps
The recycle pump construction materials have been changed to fiberglass. Fiberglass pump types range from centrifugal American National Standards Institute pumps, close-coupled, recessed impellers, self-priming, magnetic drive, etc. Discussions with Fybroc (Division of Met-Pro Corp.) indicated that their vinyl ester based FRP (ASTM C581) parts would provide suitable corrosion resistance to the process water.

The fiberglass pump from Fybroc that would be used is as follows:

Wetted End Parts:
- Case: FRP with vinyl ester resin
- Impeller: FRP with vinyl ester resin
- Backplate: FRP with vinyl ester
- Gland: FRP with vinyl ester

Non-Wetted End Parts:
- Shaft: 316 stainless steel
- Bearing Housing: Polyester thermosetting powder coated iron
- Adaptor: Polyester thermosetting powder coated iron
- O-Rings: Viton A

Feed, Backwash, and Clarifier Sludge Pumps
These pump construction materials have been changed to rubber lined, centrifugal pumps. While application data is not available for the unique environmental conditions of the process water, the use of these pumps in a wide range of corrosive environments suggests they may be suitable here as well. Wetted end parts including impeller, casing, and backplate would be lined with a corrosion resistant natural rubber liner, Warman Product R33.

Sump Pumps
These pumps would be submersible, centrifugal, cast iron (ASTM A48, Class 35) casing and impeller. Sump pumps would be exposed to belt press centrate on a daily basis. An allowance for frequent replacement of sump pumps has been made because these pumps are relatively inexpensive.

Other

Foul Air Fans
Fan materials in contact with foul air would be constructed of FRP with a corrosion resistant Ashland Hertron 693 polyester resin. No metal parts are exposed to the flow stream. There has been good success using FRP fans pumping biogas from anaerobic digesters.

Static Mixers
Static mixers would be constructed of PVC.

Pipe Penetration
The wall penetrations would be link-sealed, back grouted, and externally restrained to the walls. Link-seal would seal against the lining on one side and against the pipe on the other. Link-seal metallic hardware is to be resistant to the fluid. With the pipes fixed at wall penetrations, expansion would be allowed in the piping (not rigidly anchored to pipe supports).

Pipe Supports
Pipe supports would be constructed of vinyl ester based FRP. Fasteners would be constructed of Monel 400. A discussion of the corrosion resistance of these materials has already been made. In cases where FRP would be field-cut, exposed edges would be gel coated to protect against corrosion.

Pipe Supports
Pipe supports outside the reactor and tanks would be standard galvanized structural type.

Valves
All valves requiring full-port opening would be ball valves, PVC body, and EPDM O-rings. All other valves would be butterfly, bodies epoxy coated, disc PTFE encapsulated over 316 stainless steel, seats PTFE, and stem 17-4 PH stainless steel.

Backwash Clarifier
The backwash clarifier originally included a metal mechanism for sweeping solids to a central hopper. The solids from the bioreactor settle readily; and we have eliminated the mechanism in lieu of a settling tank with multiple hoppers. The clarifier would be lined with the same coating system proposed for the bioreactors.

Aerobic Post-Treatment Tank Diffused Air System
The aerobic post-treatment tank air piping would be constructed of PVC. Pipe supports would be constructed of FRP similar to the bioreactor tanks. Pipe support hardware would be constructed of Monel 400. Fine bubble diffuser membranes would be constructed of EPDM.

Biofilter
The biofilter internals would include HDPE piping. The biofilter walls would be constructed of concrete and would be lined with the same lining system proposed for the bioreactors.

Instruments
Instruments with corrosion resistant materials would be selected for applications that are in contact with water. A review of manufacturer material compatibility indicates these materials would be suitable with the contaminants of concern.

Examples are as follows:

- Magnetic flow meters — Flow tubes would utilize Teflon® lining with Hastelloy C-276 electrodes. Nonwetted housing shall be carbon steel with a polyurethane coating.

- Pressure gauges — Pressure gauges would be isolated by diaphragm seals. Diaphragm and wetted parts material shall be Hastelloy C-276.

- Differential pressure level sensors — Isolated by diaphragm seals described above.

- pH and ORP — Sensors would be insertion type with polyvinyldene difluoride body, Teflon® double junction, and Viton O-rings.

- Ultrasonic level sensor — Sensor would include a polyvinyldene difluoride copolymer enclosure and chloro-sulfonated polyethylene rubber (Hypalon) face.

- Temperature sensor — Sensor body constructed of 316 stainless steel. Periodic sensor replacement would be required. PVC mounting apparatus would be constructed of PVC.

- Dissolved oxygen sensor — Luminescent dissolved oxygen sensor with Noryl and 316 stainless steel probe and polybutyl methacrylate sensor.

- H_2S and lower explosive limit meter — Meters would be located in the pipe gallery room and not exposed to process water or the reactor gas space. Meters would be housed in an epoxy-coated aluminum enclosure.

Administration Building; Heating, Ventilating, and Air Conditioning; Water and Sewer

Administration Building
The administration building layout includes reception area, lab, office, control room, breakroom, restroom/shower, electrical room, utility room and garage. The

lab has a fume hood, standard lab cabinets, sink, eye wash shower, and desk. The building is a single-level building with a floor area of approximately 2,500 square feet. The building would be constructed at grade with a typical spread footing; however, a raised pad should be considered in final design. The floor would be concrete with a vinyl composite tile finish. The garage area floor would be sealed concrete. Layout and details of heating, ventilating, and air conditioning (HVAC) and plumbing in the administration building are shown on drawings 805-D-10477 through 10483.

Structural walls and roofing would use a metal frame with insulated building panels. The wall and roof panels are sandwich type with foamed-in-place polyurethane interior (similar to the American Petroleum Institute series AP 200 and AP 900, Ceres, California). Panel insulation efficiencies would be R-17 (2-inch thickness) on the walls and R-33 (4-inch thickness) on the roof. Interior walls would be metal stud and sheet rock in the main building with a drop acoustical ceiling. The garage and electrical room interior walls would be constructed using standard 8-inch concrete masonry units with a painted finish. The ceilings in the garage and electrical room areas would be sheet rock.

The building HVAC and plumbing are shown on the drawings. The administration fire protection would use fire extinguishers.

Water and Sewer

All of the proposed selenium treatment sites are located in remote areas without accessible water and sewer facilities from surrounding water and/or sewer districts. Nearest facilities are more than 10 miles away and, thereby, deemed unreasonable for economical connection. Due to the location of the proposed plant, wells and conventional septic systems have been selected to service the plant.

The administration building is the sole source for water and sewer requirements with exception of some water requirements for yard hydrants around the facility. Since the administration building is the same size for all options, the water and sewer demands for all of the facilities were assumed to be equal.

The well was sized to accommodate simultaneous water use by the largest water users in the administration building (the shower and sink) and to allow yard hydrants use at the same time. A Well-X-Trol tank may be installed to allow small intermittent demands that may occur during usage, such as flushing a toilet.

The sewer system sizing is designed based on estimated total daily water demands for the administration building, including use of the toilets, sinks, shower, laboratory, and water fountain. The total sewer flow per day is estimated at 467 gallons. Based on a staffing that could vary from four to eight persons, the per capita usage is about 75 gpd per person—a reasonable value.

The water system for the administration building consists of a 40-gpm well, approximately 200 feet deep with a 7.5-horsepower pump and motor. A 2-inch PVC pipe carries water from the well to the administration building. RO "under the sink" units are common in the area due to water quality characteristics of the area.

The sewer system for the administration building consists of septic tank and a drainfield. The nearest water table is generally more than 10 feet below the surface and allows for adequate separation from the bottom of the drainfield. The soils are tight but would allow for subsurface disposal of septic tank effluent with low hydraulic loading. The sewer system consists of a 1,500-gallon septic tank receiving wastewater from the administration building and a 55- by 110-foot drainfield with an equally sized replacement area.

The Fresno County development services require that all wells be a minimum of 50 feet from all septic tanks and a minimum of 100 feet from all leach fields.

Mechanical Room and Dewatering Building

The buildings would be constructed using steel frame and uninsulated metal panel construction. The three mechanical areas that would require HVAC are the gallery, the mechanical room, and the solids dewatering building.

Gallery

The gallery can be treated most effectively as a "tunnel" for HVAC considerations. The constantly operating recycle pumps generate a small amount of heat, which needs to be carried away. No heating or air conditioning is proposed, based on the absence of delicate equipment and the "normally unmanned" status of the gallery. Air flow for tunnels is generally calculated in terms of "face velocity" or, simply, the velocity of a plug of air moving through the tunnel. A face velocity of 50-100 feet per minute based on a gross tunnel cross-sectional area is typical. Based on a tunnel cross-sectional area of 28 feet wide by 32 feet high, the air flow rate for the galleries needs to be 44,800 to 89,600 cubic feet per minute (cfm). Since the amount of heat generated is small, a value at the lower end of the range is appropriate. Tunnel ventilation would be 50,000 cfm, which also meets a secondary requirement of 6 air changes per hour (ACH) (described below) for the longest tunnel.

Mechanical Room

Like the gallery, the mechanical room has no delicate equipment and is normally unmanned; so no heating or air conditioning is proposed. The oxidation blowers in the mechanical room generate a significant amount of heat that needs to be carried away. Ventilation for mechanical rooms is generally calculated in terms of ACH with a typical value of 6–10 ACH. Based on the mechanical room dimensions of 50 feet by 62 feet by a nominal 20 feet high, the air flow rate for the mechanical rooms needs to be 6,200-10,300 cfm. Because a significant

amount of heat would be generated in the mechanical room, a value at the upper end of the range is appropriate; 10,000 cfm would be provided for mechanical room ventilation.

Gallery and Mechanical Room Ventilation

The foul air piping in the gallery and mechanical room represents a potential source of toxic or foul air into the space; however, all of the ducting on the suction side of the foul air blowers operates at a slightly negative pressure. If the mechanical room and gallery operate at a slightly positive pressure, any leaks would pass from the spaces into the foul air stream. If the foul air blowers are located close to an exterior wall, the amount of pressurized foul air ducting is minimized and localized. A H_2S detector and combustible gas detector should be located in this vicinity, and visual alarms (a red strobe light) should be located at all the entry doors into the spaces. An air flow switch in the foul air blower discharge should also be wired into the circuit to annunciate an alarm if the foul air blower is not delivering flow.

A positive pressure can be maintained in the mechanical room and gallery by using a "power in" system of fans and dampers. A supply fan rated for 10,000 cfm should be located on the parking lot end of the mechanical building, and a supply fan rated at 40,000 cfm should be located on the parking lot end of the gallery. The air from the mechanical room would join the air provided by the gallery supply fan to provide 50,000 cfm to the gallery. Gravity exhaust dampers at the remote end of the gallery would provide for exhausting the full 50,000 cfm. During colder weather, the relatively warm air being exhausted from the mechanical room would provide a small amount of heating for the gallery.

The mechanical area electrical room is isolated from the mechanical room and would have separate ventilation and heating.

Solids Dewatering Building

Like the gallery and mechanical room, the solids dewatering building has no delicate equipment and is "normally unmanned," so no heating or air conditioning is proposed. There are no significant heat sources in the solids dewatering building, so the requirement to carry away excess heat does not exist. Ventilation for solids dewatering rooms is listed in National Fire Protection Association Publication 820. The requirement is listed as "none required"; however, experience demonstrates that this is not true.

Experience indicates that 20-30 ACH are required to carry away the vapors and condensate that forms around the solids handling equipment. Based on the solids dewatering building dimensions of 80 feet wide by 40 feet long by a nominal 20 feet high, the air flow rate for the solids dewatering building needs to be 21,300–32,000 cfm. Since an anaerobic sludge is being dewatered in this case, the potential for corrosive vapors is high; and a value at the upper

end of the range is appropriate. Air flow of 32,000 cfm would be provided for solids dewatering building ventilation.

The air flow pattern in the solids dewatering buildings should favor pulling vapors from above the machines for direct discharge to the atmosphere. The best practical way to do this is to provide hoods over the major pieces of equipment and ducting the exhaust to a roof-mounted exhaust fan. Makeup air enters through gravity dampers located low around the periphery of the building, which creates a slightly negative pressure in the building.

The solids dewatering area electrical room is isolated from the dewatering room and would have separate ventilation and heating.

Electrical Systems, Instrumentation and Controls

Administration Building

Calculations for the Administration Building indicate the requirement for a 112.5-kilovoltampere (kVA) utility transformer with a 208-volt secondary transformer. One 2½-inch conduit, with No. 4/0 American Wire Gauge (AWG) copper phase conductors would be routed to a 225-ampere (A) service entrance disconnect. The disconnect would feed a 225-A panel board, via a 230-A, three-pole automatic transfer switch, with one 2½-inch conduits with No. 4/0 AWG copper phase conductors and a No. 4 AWG copper grounding conductor. The panelboard would also be fed from a 90-kilowatt (kW) standby engine-generator set, via the automatic transfer switch. In addition to building loads, the administration panelboard would serve a 7.5-horsepower well pump via a 15-kVA, 208- to 480-volt dry-type transformer.

Mechanical Building

Calculations indicate the requirement for a 1,000-kVA utility transformer with 480-volt secondary to serve process loads. Five 3-inch conduits, each with 500 thousand circular mil (kcmil) copper phase conductors would be routed to a 1,200-A switchboard (tentatively) located within the mechanical building. The switchboard would feed two 600-A MCCs, each via two 2½-inch conduits with 350-kcmil copper phase conductors and No. 1 AWG copper grounding conductors, located within the mechanical room. The switchboard would also feed a single 200-A MCC located within the dewatering room via a single 2-inch conduit with No. 3/0 AWG copper phase conductors and one No. 6 AWG copper grounding conductor. All pumps and fans would be fed from the respective MCC. Lighting is fed from the 208/120-volt panel.

Instrumentation and Controls

The facility control involves a central PLC to monitor and control individual control loops. The majority of field instrument signals would be for monitoring only to provide alarm status (i.e., if the liquid level in the filters climbs too high because of excessive filter headloss). The nutrient feed loop discussed in the

"Nutrient Addition" section, in contrast, involves a feedback loop to maintain an ORP setpoint. A PLC-based system is ideal for this need.

The PLC system can be any of several commercially available systems such as the Allen-Bradley SLC 5/04 system with a DH+ communications protocol. The choice of equipment would depend on Reclamation preferences. Drawing sheet 805-D-10494 Scada System Block Diagram illustrates the instrumentation system. A main process PLC is shown residing in the mechanical building. It controls processes in the mechanical building and solids dewatering building with human-machine interfaces or operator interfaces in each building. For reliability purposes, the PLC cabinet in the mechanical building would contain two PLCs—one duty and one standby. A communications link would allow staff in the administration building to observe operating conditions and make some remote changes. Other units would likely need to remain manual (i.e., blower startups for the multistage centrifugal blowers).

Disposal of Selenium Concentrate

The anaerobic bioreactors capture selenium by bonding to the solids produced in the process. The selenium containing solids are wasted or harvested during backwash events.

Solids Generation Quantities

Nutrient is blended with the RO reject water and fed to the bioreactors. Microbial biomass uses the nutrients to chemically reduce the nitrates through respiration and yield new biomass. The amount of nutrient required to consume the nitrate is estimated between 0.2 and 0.4 gallon of nutrient per thousand gallons RO reject water. This feed rate has a direct effect on the biomass produced. When more nutrient is fed, more biomass is produced. With increased biomass production, shorter filter run times between backwashes are possible, as is increased dewatering and disposal of additional biomass.

Table 23 shows the amount of solids predicted from backwashing the bioreactors. The solids generated by the ABMet® process are a combination of biomass and lost media. The biomass generated is independent of backwash frequency and directly related to the quantity of nutrient fed to the system. The biomass quantities in table 23 are based on the upper value of 0.4 gallon of nutrient per 1,000 gallons water treated.

The backwash solids related to lost media are assumed to occur with each backwash cycle. The media solids are directly related to the backwash frequency. It is assumed that the fully loaded trains would require monthly backwashing. The media loss is assumed to be 0.25% per backwash or about 3% per year for the fully loaded trains. The backwash frequency reduces when all trains are running at reduced load (i.e., when load is spread to redundant units).

Table 23. Biotreatment solids production estimates[1]

Description	Units	Value[2]	Comments
Flow Conditions	acre-ft/yr	4,758	
Backwash Solids			
Backwash Frequency	/year	264	
Total Mass	lbs/bw	5,971	
Backwash Concentration	mg/L	3,977	
Total Mass per year	lbs/yr	1,576,326	
Selenium Concentration	mg Se/kg TSS	2, 974	dry wt basis

[1] Solids production estimates use average annual flows (shown in table 21).
[2] lbs/bw = pounds per body weight; TSS = total suspended solids; kg = kilograms.

Dewatering Alternatives

Drying beds were initially considered as a method to dewater the backwash solids. Table 24 lists net evaporation rates, pan evaporation minus precipitation, for four area weather sites. Net evaporation in the months of November through February is almost negligible. The net evaporation is not much better for the 6-month period between October and March. With limited net evaporation rates in the winter months, it appears that mechanical dewatering would be the preferred method.

Table 24. Net evaporation rates for area weather sites in inches[1]

Month	Bakersfield	Merced	Fresno	Los Banos
January	0.55	-0.79	-0.73	-0.08
February	1.16	-0.03	0.28	1.04
March	3.03	1.63	1.95	4.17
April	5.37	5.18	5.03	8.86
May	8.11	7.91	8.41	13.87
June	9.47	9.96	10.23	16.61
July	9.77	10.92	10.87	17.88
August	8.72	9.01	9.60	15.64
September	6.39	6.42	6.75	11.62
October	4.19	4.02	3.90	7.10
November	1.51	0.44	0.86	2.33
December	0.67	-0.48	-0.25	0.58
October – March (worse case)	11.1	4.8	6.0	15.1
Apr - Sept (best case)	47.8	49.4	50.9	84.5

[1] Weather data from the following sites:
http://www.sjd.water.ca.gov/landwateruse/evaporation/index.cfm
http://www.calclim.dri.edu/ccda/comparative/avgpan.html
http://www.wrcc.dri.edu/cgi-bin/cliRECtM.pl?calbdr

Due to the abrasive nature of granular activated carbon (GAC) solids that would be present in limited amounts in the backwash sludge, we recommend a belt filter press. For corrosion resistance the frame would be constructed with 304L stainless steel. Belt press dewatering is expected to produce waste solids with a total dryness as required by the State of California for ultimate disposal. The dewatering system is expected to produce waste solids with a total solids content of 30 to 40%. At this concentration, the solids would be in the form of a cake and not a liquid.

Solids Disposal

Title 22 of the California Code of Regulations (§66261.24) defines acceptable quantities of selenium associated with solids as less than 100 ppm. Since selenium concentrations in the wasted solids would have more than 2,000 ppm, the wasted solids are defined as hazardous and as such, must be disposed at a Class 1 hazardous waste landfill. The closest Class 1 landfill is the Kettleman Hills Landfill in Kings County. The O&M cost for disposal of hazardous solid waste is estimated based on a quote for hauling and disposal at the Kettleman Hills facility.

Refined selenium is a commodity used in electrical devices, pigments, glass production, and metallurgy. The market for selenium has increased significantly in recent years and remains strong at $60 per pound. A contractor is exploring recovery of selenium from the waste biomass produced in the bioreactors. If this is feasible, recycling the selenium byproduct would result in significant savings in waste disposal costs.

Treated Effluent Disposal

The treated effluent from the biotreatment plant, containing 10 µg/L of Se or less, would be conveyed via gravity flow using HDPE buried pipeline to the evaporation pond facility located on the north side of the Outside Canal, as shown in figure 19.

Evaporation Ponds

The proposed evaporation ponds would impound the treated effluent from the biotreatment plant within a series of interconnected cells for sequential evaporation/concentration until salts are precipitated from concentrated slurry in the terminal cells. As each terminal cell is filled, it would be capped and graded for permanent disposal.

Number of Evaporation Pond Facilities

One evaporation pond facility was designed for the disposal of effluent from the proposed biotreatment plant in the Northerly Area. Alternative quantities of

ponds and configurations with other drainage service components were considered but found to be more costly due to greater costs of conveying the drainage to the evaporation ponds.

Selection of Pond Location

Data obtained from Natural Resources Conservation Services and maps generated by Mid-Pacific Region staff of clay content, Se concentration in groundwater, and Federal Emergency Management Agency 100-year flood plain maps aided in locating preliminary sites to be investigated for construction of the evaporation ponds. Subsurface investigations performed by Reclamation provided additional information to further evaluate potential evaporation pond locations.

Using the criteria described in the paragraphs below, the proposed evaporation pond location for the Northerly Area is between the Main Canal and the Outside Canal, adjacent to the proposed reuse facilities (refer to figure 19).

Environmental Impacts

Areas having existing environmental concerns were taken into account to reduce potential environmental impact. Known bird migration paths and sightings were noted, and attempts were made not to locate evaporation ponds in such areas. Coordination with preparers of the EIS was made to locate the evaporation ponds to minimize environmental concerns that may occur due to the placement of an evaporation pond. Selected pond locations were coordinated with mitigation designers so that at least a 3-mile distance from potential alternative habitat (AH) locations could be maintained.

100-Year Flood

Federal Emergency Management Agency flood plain maps were utilized to locate ponds outside of 100-year flood plains. Additional protection from flooding would be provided by the height of pond outer embankment walls.

Foundation Soils

Subsurface explorations were performed by Reclamation to investigate the soil foundation conditions. The purpose of the subsurface investigation was to obtain soil type and hydraulic conductivity (K) of the areas selected. Areas with predominately “tight” fined-grained soils were favored to reduce potential infiltration and contamination of groundwater from the concentrated drainage impounded in the evaporation ponds.

Groundwater Quality

Areas with existing poor groundwater quality, (i.e., electrical conductivity > 10,000 microsiemens per centimeter and selenium concentrations > 200 µg/L) were preferred to reduce the relative impact of potential pond seepage on the underlying groundwater aquifer.

Proximity to Reuse Facilities and Treatment Plants

Designers of the conveyance system determined placement of evaporation facilities to permit gravity flow from reuse facilities and treatment plants. The locations were further refined to accommodate any limitations or design requirements that may be placed on the conveyance system. As pumping costs are refined in final design, cost comparisons may be made for relocation of evaporation ponds.

Land Use

Consideration was also given to land use in locating the evaporation ponds. Priority was given to land already taken out of service due to land retirement. Land with existing structures, such as homes or existing farm structures, was not considered.

Evaporation Pond Water Management and Cell Layout

The analysis below defines basic operating criteria necessary to establish feasibility designs. A more detailed pond operating manual would be prepared in final design, based on the results of pilot testing. The manual would include standard operating procedures as well as provisions for managing flows during pond startup, dry years, and wet years.

Evaporation ponds were designed to provide an efficient evaporation system and to reduce environmental impacts. Design of the ponds' water management and evaporation systems reduces the potential of a pond cell dropping below a 2-foot water depth to avoid conditions that favor bird nesting. The functionality of the facility is to accommodate both maximum and minimum anticipated inflows and maintain a minimum 2-foot depth during potential minimum flow years (dry years).

The purpose of the 2-foot minimum water depth is to reduce the potential attraction of birds that thrive in shallow water habitat. For further background on the use of a minimum 2-foot depth, refer to section 20 of the EIS.

As an added measure to enhance the evaporation ponds' ability to achieve the 2-foot minimum depth at all times, the normal concentrating cell operating depths are between 4 and 7 feet. The 4-foot depth reduces potential vegetation growth by decreasing the amount of sunlight reaching the base of the pond cells. Vegetation growth, besides being an attraction to water fowl, can reduce the evaporation rate of the water by blocking sunlight at the water surface. The rate of evaporation varies over the year due to temperature, climate, water quality, and a host of other factors. Design inflow rates to the evaporation ponds do not match this variance in evaporation rate. The use of 3-foot depth operating range (volume as a measurement of depth) was determined adequate to store inflow during the winter when evaporation rate is low and maintain minimum cell depth requirement when evaporation rates are high.

The variance in operating volume is also a key factor in providing environmental protections during startup operations of the evaporation pond. As inflow to the evaporation pond increases during startup operations, the initial cells would reach their maximum depth of 7 feet. Once the cell operation reaches this maximum depth, half of its volume would be moved to fill its subsequent adjacent cell. By moving this volume of water in one operation from preceding cell to subsequent cell, the minimum 2-foot water depth for environmental concerns can be maintained at virtually all times during startup operations. To accomplish this, cell number one is divided into smaller subcells as shown in the figure 29 below. This operation may be performed during the winter months when inflows to the evaporation pond are high in comparison to the evaporation rate allowing for further storage before the high evaporation times of the year.

The evaporation pond cells are interconnected to one or more of the subsequent cells to allow for flow paths that would change in response in inflow variations. Evaporation pond design provides the operational capability to take cells out of service to adjust to potential inflow shortfalls due to potential dry years and startup procedures (as shown in figures 29 and 30 below and drawing 805-D-10438). This would facilitate water getting to the designed terminal cell during startup operations that may occur over a period of years while maintaining the 2- to 4-foot minimum depth. Flow paths would be adjusted as necessary to respond to changes in storage volume; however, relative concentration gradients between the concentrating cells would be maintained.

Figure 29 shows the path during normal operations—Cells 1a, 1b, 1c, 1d, 1e, 2, 3, 4, and T1. Figure 30 shows a shortened path—Cells 1a, 1b, 1c, 1d, 4, and T1. The shortened pathway removes cells 1e, 2, and 3 from the evaporation operation. This flexibility also allows water to move from less concentrated cells to the cells with the highest salt concentrations during winter months so that a thin layer of relatively clean water can be placed on the top as a protective layer.

The development of cell layout also considered the need to provide a way of draining each cell. As a cell is taken out of service (for maintenance or closure operations), the ability to drain to one point would assist in the rapid removal of water. This is both important in minimizing the time the cell bottom would be in a “muddy” state as well as the number of pumps required to drain the cell. The cell layout provides the ability to drain cells in an expedient and cost-effective manner. Skid-mounted portable pumps would be used to evacuate cells as needed.

Evaporation Process Design

The approach taken was to develop evaporation ponds for maximum efficiency (i.e., ponds in which the salinity of the brine increases as it moves through a series of concentrating ponds where the evaporation rates are high and then into the terminus pond where the effective evaporation rates are much lower). All

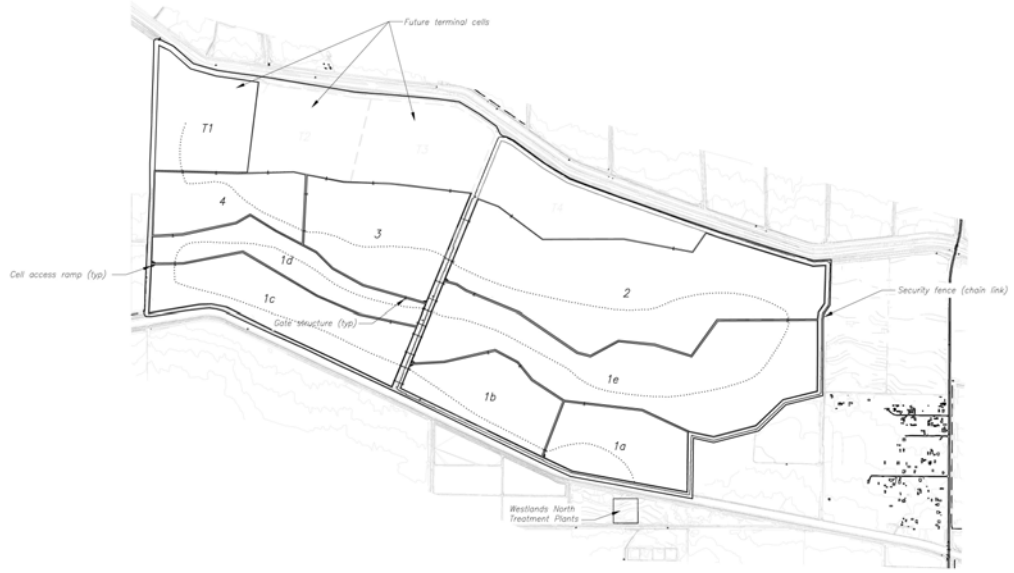

Figure 29. Flow path and cell operation during normal operation.

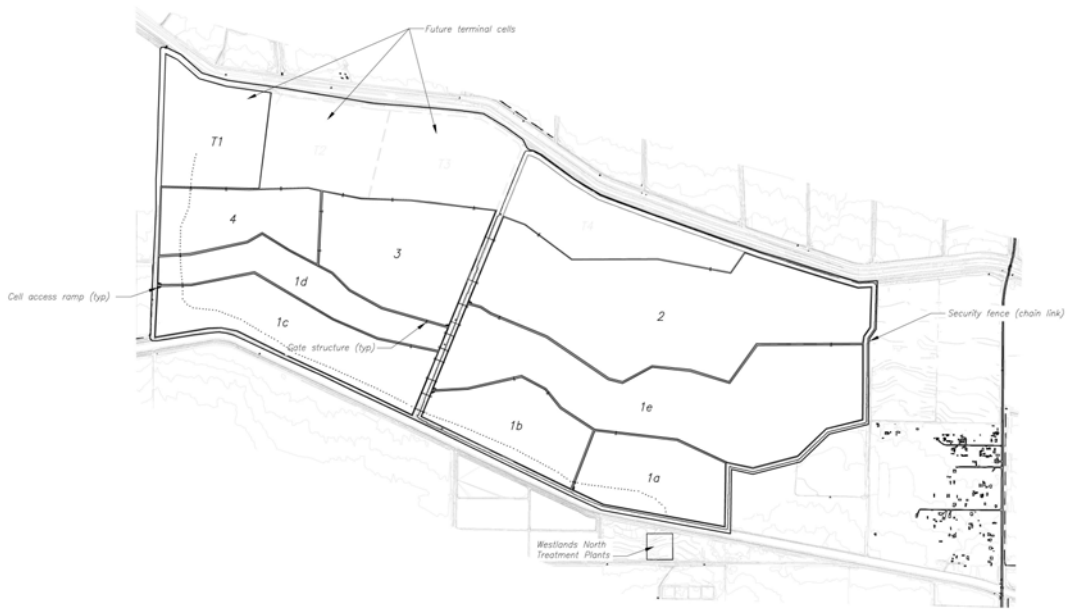

Figure 30. Flow path and cell operation during low flow operation.

evaporation ponds are configured as "once-through, gravity-flow" systems, consisting of a series of concentrating cells capable of receiving and further concentrating the effluent from the biotreatment plant and terminus ponds (cells) at the end which serve as the main repository and final disposal site for the precipitated salts.

Based on a water chemistry analysis and the local experience at other evaporation ponds, it is assumed that most of the dissolved salts in the influent drainwater will precipitate in the terminus ponds. A small amount of calcium carbonate and calcium sulfate may also precipitate in the concentrating cells, with most of it (estimated at less than a 1-inch total over 50 years) deposited in the first cell, since the reject from the RO and (biotreatment) plant under normal operating conditions will be saturated with these salts. Designers considered enhanced evaporation technologies but determined they have not adequately been demonstrated for the purpose of developing feasibility designs and cost estimates. Conventional solar evaporation is the basis for process design.

The criteria used to determine when the concentrated brine will be transferred to the terminus pond(s) are:

- When the salinity in the last in the series of concentrating cells reaches 1.195-1.20 specific gravity (270,000 mg/L TDS) at which point the brine will be near saturation for the sodium salts (chloride and sulfate) that make up about 90% of the salt constituents. Note that the timing of this transfer to the terminus ponds may also be determined to some extent by temperature, since sodium sulfate precipitation is strongly temperature-dependent, starting around 20 ºC (68 ºF).

- When the concentrating cells are full and unable to accept additional inflow due to events such as excessive rainfall and/or the RO treatment facility being temporarily out of service. The terminus pond would thus serve as a temporary emergency holding cell when the capacity of the concentrating cells is exceeded for any reason.

The terminus ponds will be divided into four cells of equal area, each sized to hold 5½ to 6 feet of salt, which is the amount of salt that is expected to accumulate over a 12.5-year period based on a density of 95-105 pounds per cubic foot. The terminus cells will be constructed with a relatively smooth bottom surface that gently slopes toward the sump and lined with a geomembrane sandwiched between layers of compacted clay. Each of the four terminus cells will be further subdivided into managed subunits to control salt deposition and allow the bittern to be flow from one subunit to the next via gravity.

The operational strategy will be to use one terminus cell at a time, keeping at least 2 feet of bittern in it for a period of 12½ years or until 5½ to 6 feet of precipitated salt has accumulated at the bottom. When this occurs, the cell will be retired

(taken out of service); and the leftover bittern, as well as the incoming flow, will be diverted to the next terminus cell, where the salt precipitation process will continue for another 12½ years or until that cell has 5½-6 feet of salt in it. This repetitive process will continue to the end of the project. As each cell is retired, it will be left to drain and dry out before starting the closeout procedure described later, which will end with the salt being landfilled in place.

Design Assumptions

- The ponds are laid out to allow for gravity flow from one cell to the next. The flow control gates between cells will be constructed using corrosion-resistant materials.

- Flow between cells will be from the bottom of one cell to the top of the next to ensure that the heavier brine is moved downstream toward the terminus pond.

- The concentrating cells, as well as the terminus pond(s), will be built with vertical sidewalls. The ponds will be sized to allow for a minimum of 2 feet of freeboard when full.

- All ponds will be constructed with a geomembrane liner to keep leakage (seepage into the groundwater) to less than 1×10^{-6} centimeters per second (cm/sec).

- The concentrating cells will be operated with a minimum water depth of 4 feet to keep out shore birds and to prevent weed growth; a 2-foot minimum is all that will be required for the terminus pond(s), since that environment is not conducive to weed growth.

- Inflows to the evaporation ponds are based on the effluent discharges from the treatment plants described in previous sections of this appendix and are shown in figure 31. For the Northerly Area evaporation pond system, it is assumed that the project will be brought online at full capacity with the inflow varying throughout the year.

- The pond cells are sized based on “average-year” and “wet-year” flow conditions (in terms of inflow and rainfall) as well as varying rates of evaporation. The capability of the basins to handle larger than normal rainfall (and feedwater flow) will be provided for by:

    - Making the cells deeper to increase the storage volume

    - Moving any excess water into the terminus pond even if it has not reached 1.195 specific gravity

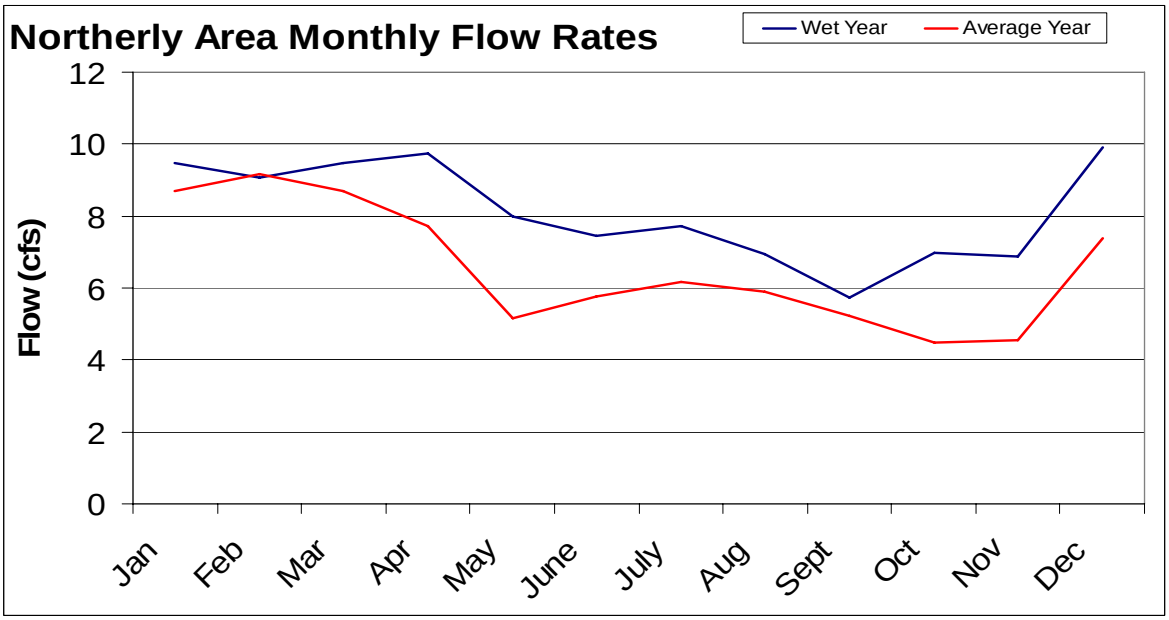

Figure 31. Average monthly inflows to evaporation ponds.

The net evaporation (total minus precipitation) rates shown in the table 25 below are based on "average" weather conditions, using data recorded at the Fresno CIMIS Station (No. 2) located near Five Points, California.

Table 25. Average climatic data collected near Five Points, California[1]

Month	Insolation ($kWh/m^2/day$)	Temperature (ºF)	Relative Humidity (%)	Wind Speed (mph)	Precipitation Average (in/mo)	Net Evaporation (in/mo)
January	2.1	45.7	83	4.9	1.64	(0.39)
February	3.2	51.3	77	5.6	1.57	0.40
March	4.7	55.0	69	6.7	1.55	2.35
April	6.3	61.2	57	7.6	0.45	5.57
May	7.5	69.1	47	8.5	0.31	7.32
June	8.1	76.6	42	8.5	0.08	8.27
July	8.0	81.1	39	7.6	0.04	8.53
August	7.2	80.2	45	6.9	0.06	7.79
September	5.9	74.5	50	6.3	0.26	5.84
October	4.3	65.1	58	5.1	0.59	3.86
November	2.7	53.6	74	4.7	0.67	1.65
December	1.9	45.3	84	4.7	1.05	0.10
Average	5.2	63.2	60	6.5	0.69	4.27

[1] $kWh/m^2/day$ = kilowatthour per square meter per day; in/mo = inch per month.

Pond Performance Model

The computer model developed for the evaporation process design provides the user the capability to calculate:

- Cell sizes for the concentrating cells as well as the terminus pond
- The average salinity in each cell on a yearly basis
- The variation in pond depth that occurs from month to month

Input data – RO reject flow rate (acre-ft/yr) and salinity (mg/L TDS):

- Net evaporation rates (feet per year).
- Pond layout – number of cells and water depth for each.
- Concentrating cell sizes – each expressed as a function of the size of cell 1.
- Number of terminus cells and time required to fill each (years).
- Evaporation brine factor (estimated) for each cell – a factor equal to or less than 1.0 that represents the estimated "effective evaporation of the cell" compared to the evaporation rate for freshwater. Note that this is assumed to equal 0.6 for the terminus cells.
- Salt compaction density (lbs/ft^3) and depth (feet) in the terminus pond.
- Leakage rate (cm/sec).
- Seepage collection factor (between 0 and 1 where 1 = 100% collection).

Output information – surface area for each cell (acres)

- Evaporation brine factor and average salinity for each cell (mg/L TDS)
- Pond depth by month (± feet)
- Salt lost to groundwater as a function of permeability and percent seepage collected

Cell Sizing

The results of the analysis are presented in table 26, which shows the individual cell sizes and salinities (mg/L TDS and specific gravity). The maximum wetted area is the sum of the four concentrating cells plus one of the four terminus cells because only one terminus cell will be in operation at any one time. The total

Table 26. Evaporation cell sizes and salinities

NORTHERLY AREA (k = ≤ 1 x 10^{-6} cm/sec)			
	Size (acre)	Salinity (TDS)	Specific Gravity
Cell 1	653.6	29,377	1.032
Cell 2	261.5	63,227	1.050
Cell 3	130.7	139,302	1.094
Cell 4	65.4	287,587	1.194
Four terminus cells	318.8		
Maximum wetted area	1190.9		
Total land required	1430.0		
Tons of salt lost per year =	0		

land area required over the 50-year planning period includes all four terminus cells but does not include the area needed for embankments, roads, and other site features.

These results are based on the following design parameters:

- Concentrating cells sized assuming:
  - Cell 2 is 40% the size of cell 1
  - Cell 3 is 20% the size of cell 1
  - Cell 4 is 10% the size of cell 1
- Average annual net evaporation of 4.27 feet per year (based on historical data for the service area)
- A terminus pond that is divided into four cells, each capable of holding 12.5 years of uncompacted salt to a depth of approximately 6 feet at 96½ lbs/ft^3
- An evaporation brine factor of 0.6 (compared to freshwater) for the terminus pond

Terminus Cell Closure Plan

Estimates of how much it will cost to close each of the terminus cells and landfill the salt in situ were developed. These estimates are based on the assumption that one terminus cell (representing one-fourth of the disposal area) at each site will be closed every 12½ years. The closeout effort will include dewatering, sampling (an analysis of the pond sediments), decommissioning, earthwork to cap and cover the salt bed with at least 12 inches of compacted clay and 12 inches of topsoil, and the vegetative cover of native halophytes needed to prevent erosion and maintain the integrity of the cap.

Cell Wall and Interceptor Trench Design

The decision to utilize vertical interior sidewalls for all pond cell embankment faces was made to eliminate potential foraging and nesting of shorebirds. This decision was based on a preliminary cost comparisons of several different embankment options and discussions between fish and wildlife agencies and Reclamation personnel working on the EIS. The relatively vertical surfaces should extend the wall above the waterline and far enough below the waterline so that it would not appear as a "beach" to water fowl. The next stage of the evaluation compared cost estimates for two different types of vertical cell wall construction (option 1—sheet pile wall construction and option 2—slurry wall construction); however, the sheet pilot option was selected for the feasibility cost estimate. These options are shown in figures 32 and 33 below and on drawings 805-D-10442 and -10443.

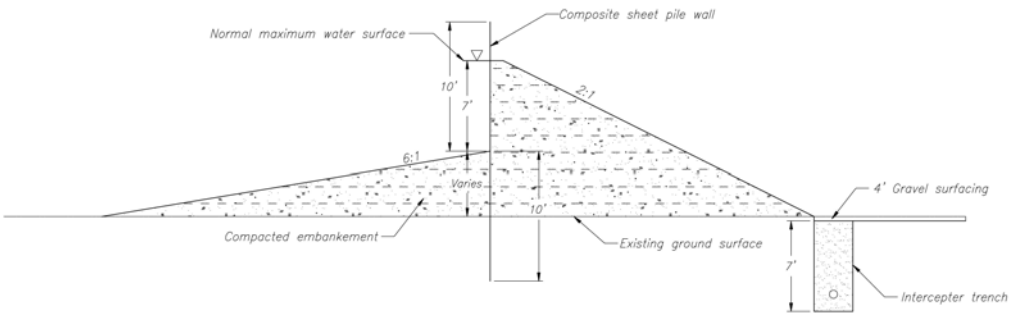

Figure 32. Cross section of composite sheet pile wall construction.

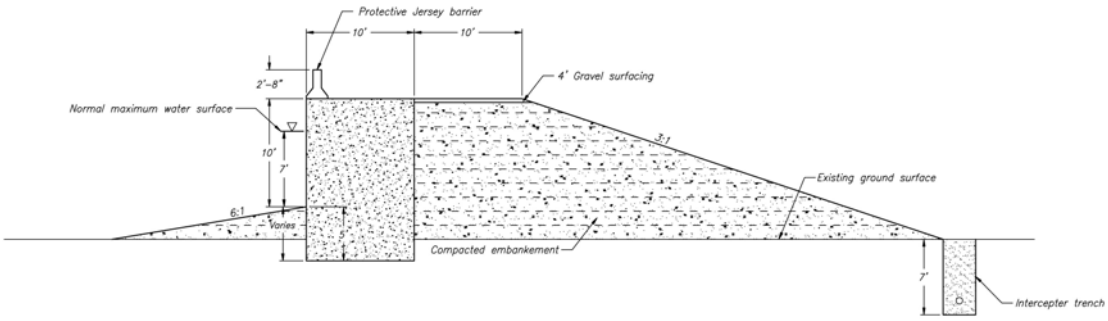

Figure 33. Cross section of slurry wall construction: cement-bentonite (CB) or soil-cement-bentonite (SCB).

Embankment Option 1 – Composite Sheet Pile Wall Construction

Construction of the sheet pile wall would be as follows:

- Construct an embankment to the specified height. Each cell embankment height would be to 7 feet above the highest point of that cell. It is anticipated that this compacted embankment would be constructed utilizing local clay and silty-clay soils found within the cell boundaries.

- Drive 20-foot long composite sheet pile to a 17-foot depth. This would leave 3 feet of composite sheet pile extending above the embankment crest. The use of composite sheet piling is indicated due to the highly corrosive nature of the brine being contained. The foundation soils are weak and contain little to no gravels or cobbles. It is anticipated that the pile would be easily vibrated to depth in utilizing a vibratory hammer. The use of a mandrel may or may not be necessary.

- Excavate the interior (facing the center of the cell) face to a depth of 7 feet with the remaining toe section sloping down at a 6 horizontal (h):1 vertical (v) slope until intersecting natural ground. Waste embankment material would be spread into the low areas with each cell or utilized in the construction of adjacent cell walls. Care should be taken not to create mounds that would block drainage of cell contents.

- Excavate and place an interceptor drain trench at the toe of the outboard face of the embankment. Trench drains would be excavated to or just below the existing groundwater surface. Each cell would be encircled by an interceptor trench with its own collection system.

Sheet piles are not waterproof. There still needs to be an embankment dam behind the pile wall to reduce the seepage losses that are able to pass through the sheet pile interlocks. Composite sheet piles are driven with a sealer in the receiver side of the interlock. Even though the construction would use an interlock sealer, a secondary seepage protection method would be needed to reduce the required section modulus of the sheet pile.

The trench drain system is designed to intercept and return seepage losses from each cell. The salinity of impounded drainage water is different in each cell; therefore, intercepted seepage would be returned to the cell of origin. Cells with a common boundary to another cell share a common interceptor drain. The drainage for that stretch of trench would be monitored and returned to the cell of similar or lower concentration. This system of encircling each cell with an interceptor trench also allows for individual monitoring of each cell liner as well as reducing the pumping/collection distance to a minor amount.

Embankment Option 2 – Slurry Wall Construction

Cell embankment crest elevation would be determined by the cell's topography. The crest would be set at 10 feet above the highest point within the cell. As the topography drops about the cell, so would the base of the embankment. The vertical section of the embankments interior wall would remain at 10 feet and as the base drops with a 3(h):1(v) slope extending to intercept the cell base as shown in figure 33. This would be done to provide support to the vertical section without extending the limits creating a more cost-effective section.

Construction of the slurry gravity wall would be as follows:

- Place an embankment to the height of the proposed wall. Exterior wall would be built to a height of 10 feet above the highest point in the cell, and the interior walls would be constructed to a height of 8 feet above the highest point within the cell.

- Allow the embankment to be in place at least 6 to 12 months to allow the foundation soils to consolidate prior to proceeding with construction of the slurry wall. Unlike a flexible wall, such as a sheet pile wall, this method of wall construction is stiff and would require the existing loose soil foundation to be consolidated prior to placement.

- Excavate and place the CB or SCB wall, using slurry wall construction methods. The embankment already exists because of the preconsolidation of the foundation soils. The perimeter walls would be placed to a depth of 15 feet and the interior walls to a depth of 12 feet.

- Excavate the interior walls (walls totally within the perimeter of the evaporation pond) face to a depth of 8 feet with the remaining toe section sloping down at a 6(h):1(v) slope until intersecting natural ground. Excavate the perimeter walls (wall along the outside of the evaporation pond) face to a depth of 10 feet with the remaining toe section sloping down at a 6(h):1(v) slope until intersecting natural ground surface. Waste embankment material would be spread into the low areas with each cell or utilized in the construction of adjacent cell walls. Care should be taken not to create mounds that would block drainage of cell contents.

- Excavate and place an interceptor drain trench at the toe of the outboard face of the embankment. Trench drains would be excavated to or just below the existing groundwater surface. Each cell would be encircled by an interceptor trench with its own collection system.

- Unlike the sheet pile wall, the slurry wall would be considered waterproof; however, there would be a high probability of cracking due to potential differential settlement. The preconsolidation of the foundation soils would

reduce, but would not eliminate, the potential for differential settlement. The embankment behind the slurry wall would provide secondary seepage protection.

The trench drain system is designed to intercept and return seepage losses from each cell. The salinity of impounded drainage water is different in each cell; therefore, intercepted seepage would be returned to the cell of origin. Cells with a common boundary to another cell share a common interceptor drain. The drainage for that stretch of trench would be monitored and returned to the cell of similar or lower concentration. This system of encircling each cell with an interceptor trench also allows for individual monitoring of each cell liner as well as reducing the pumping/collection distance to a minor amount.

Other Vertical Wall Construction Options Considered

Other vertical wall construction options considered were precast wall systems, gabions, geomembrane/plastic wrapped soil (bag systems), and slip-formed walls. Designs and cost estimates for these wall options were not pursued due to considerations of required longevity (50-year design life), the corrosive nature of the brine being contained, and the cost of the large volume of material required for construction. A brief review of other wall construction options considered is provided below.

Option 3—Reinforced Concrete Retaining Walls

The construction of reinforced concrete retaining walls (figure 34) was not only assumed to be cost prohibitive but would prove difficult to protect the reinforcement from the corrosive environment. Corrosion inhibitors and/or cathodic protection systems may be required. Because the concrete retaining wall is a rigid structure, foundation treatment would be required to minimize potential for differential settlements. The flat, stiff foundation slab would create a potential roof to foundation piping failure modes.

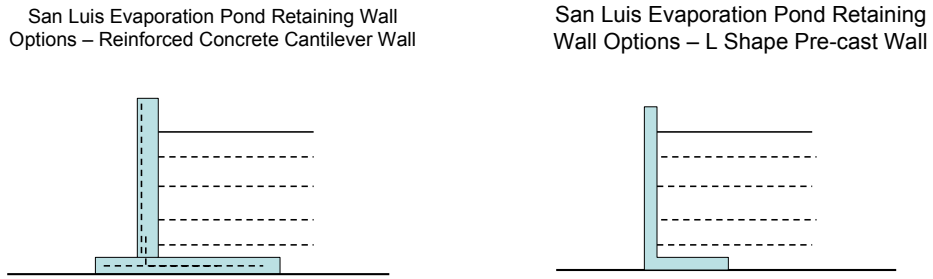

Figure 34. Option 3—Reinforced concrete retaining walls.

Option 4—Stacked Gabions

Stacked gabions (figure 35) were considered but would not meet the required life expectancy. Also, the relatively high level of maintenance required would make the use of gabions cost prohibitive. The gabions consist of soil-filled bags that are 1 to 2 feet high, 5 feet wide and about 25 feet long. The gabions are stacked one upon another to create a wall. There would be difficulty in constructing a durable facing to withstand the environment that the gabions/bags would be subjected to. The gabions would also create a roof to potential piping slope failure mechanisms.

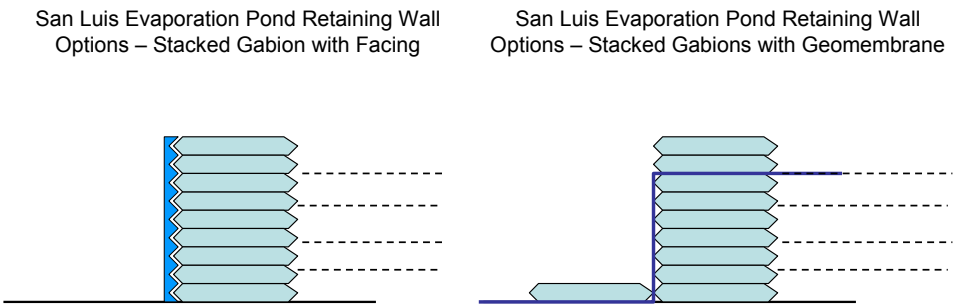

Figure 35. Option 4—Stacked gabions.

Option 5—Slip-Formed Retaining Wall

Slip-formed curb retaining wall construction (figure 36) has been utilized by Reclamation before (Upper Stillwater Dam) but may not be appropriate for this facility, in that a drain would need to be constructed behind the concrete curb wall face. Corrosion inhibitors and/or cathodic protection systems may be required.

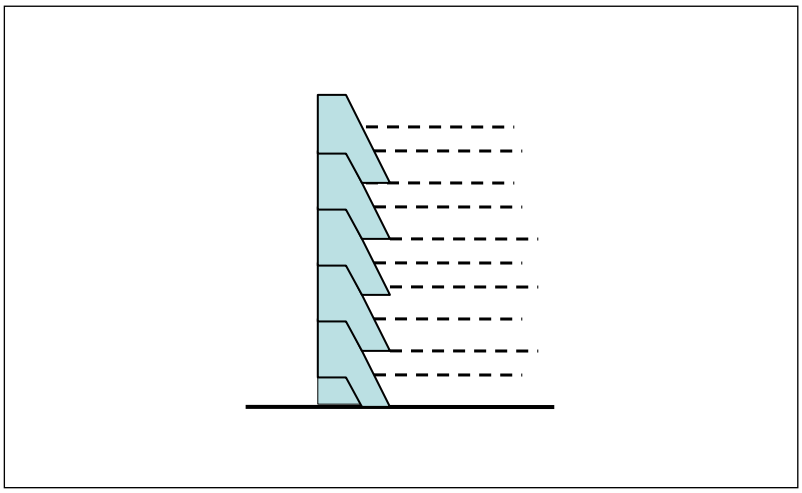

Figure 36. Option 5—Slip-formed curb, evaporation pond concrete retaining wall.

Embankment Gate Structure

Gate structures would be required to allow flow between adjacent cells with the ability to take brine from the bottom of one cell and move it to the top of the other. There would also be a need to move impounded water from the top of one cell to the top of another. This would allow a layer of fresher water to be placed on top of more saline brine in a subsequent cell to reduce the potential of salt crust formation on the pond surface when the temperature drops during the winter months.

The corrosive nature of the brine was also considered in the design of the gates. Water would flow through gates from one cell to another by gravity to avoid the expense of operating and maintaining pumps in this highly corrosive environment.

Figures 37 and 38 below (and drawing 805-D-10444) show the preferred feasibility design for the gate structures. This gate structure design is used for both sheet pile and CB/SCB wall constructions. The design consists of two concrete structures connected by a 24-inch-diameter HDPE pipe. The 24-inch diameter is far greater then the 6 inches required to meet flow requirements (flow requirements given a 1-foot head differential) but is sized to allow for maintenance ease. The separation of the two structures allows the flexibility to separate the cells as needed to fit existing site conditions. This flexibility is required in the Northerly Area where an existing surface water drainage ditch transects the evaporation pond site into two sections. Cells are separated by as much as 200 feet.

Gate structures are liberally placed so that flow between cells can be altered to fit the inflow/outflow needs represented in figures 38 and 40.

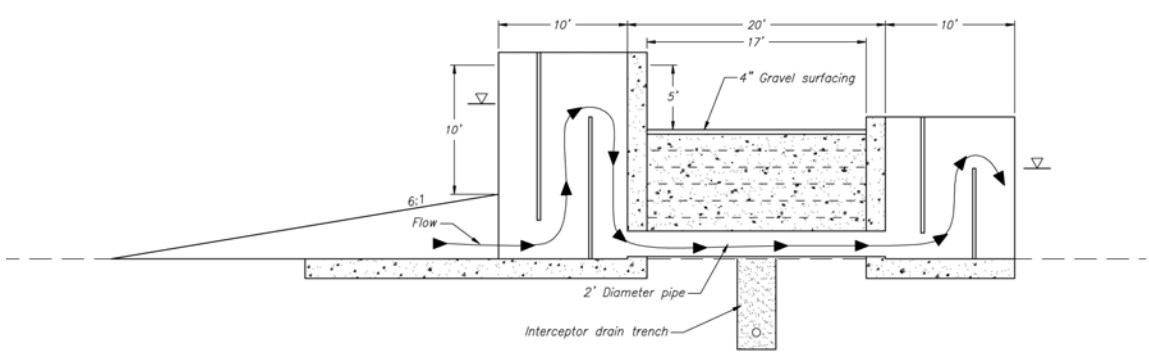

Figure 37. Flow of brine through gate structure.

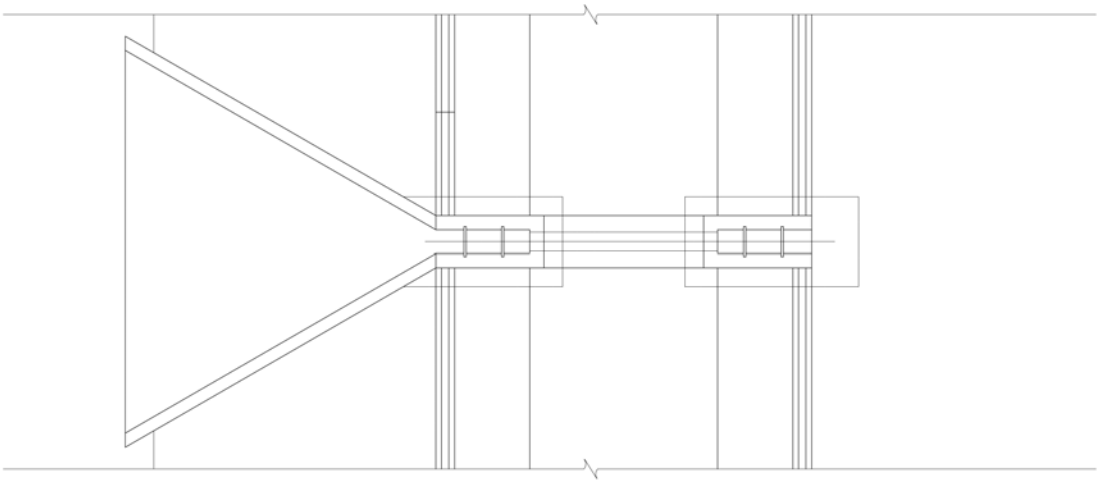

Figure 38. Plan view of gate structure.

The gates are stoplog gates that are constructed using wood slats. Two stoplog gates for each side of the gate structure would allow flow to be pulled from the top or bottom of the pond cell and be regulated by the second gate acting as a weir. Cells can be drained to perform maintenance activities after closing the farthest upstream and downstream gates. Portable skid-mounted pumping units would be placed at low points in cells to assist draining of cells.

Cell Liner Design Criteria and Regulatory Requirements

The cell liner design criteria and regulatory requirements for limiting potential groundwater contamination from the proposed evaporation ponds are not well defined. Reclamation has discussed evaporation pond construction with the Regional Water Quality Control Board (RWQCB) in Fresno, California, and it is anticipated that discussions would continue even through final design efforts. It is difficult for Reclamation and the RWQCB to finalize design requirements until a designed product is made available for the RWQCB to review. The RWQCB has provided some guidance in recommending the following:

1. The soil foundation should have a hydraulic conductivity no greater than 1×10^{-6}cm/sec across a 1-meter thickness.

2. A 5-foot buffer should be between the base of the evaporation pond and the existing groundwater.

3. Subsurface groundwater should not be a beneficial or potable water source (i.e., existing groundwater should have a TDS concentration of at least 10,000 mg/L).

The primary regulations potentially affecting the design of evaporation ponds are State regulations:

1. Toxic Pits Control Act (TPCA): The TPCA applies to impoundments of hazardous waste. If the concentration of dissolved Se in evaporation ponds reaches 1,000 mg/L, it is classified as a hazardous waste and subject to the provisions of the TPCA. Given that influent concentrations to the proposed evaporation ponds are not to exceed 0.01 mg/L and given that past operational experience and scientific investigations at other evaporation ponds in the San Joaquin Valley with similar influent Se concentrations (primarily Tulare Lake Drainage District [TLDD]) do not exceed 100 mg/L of Se in the concentrating cells, it is assumed that the TPCA would not apply to the proposed evaporation ponds.

2. The RWQCB Water Quality Control Plans: The project study area in the Northerly Area regional basin and Water Quality Control Plan:

   a. Water Quality Control Plan for the Sacramento and San Joaquin River Basins, which applies to the proposed Northerly Area evaporation pond.

   The RWQCB control plans do not provide specific design guidance for evaporation ponds; however, this agency would ultimately regulate the design and operation through issuance of Waste Discharge Requirements permit.

3. Title 27, California Code of Regulations: Title 27 regulates hazardous and solid wastes. Existing evaporation ponds have been exempted from this regulation, and the RWQCB has indicated that the proposed ponds may be exempt as well under the provisions of the following paragraph from Title 27:

   Title 27. Environmental Protection, Division 2. Solid Waste. Subdivision 1. Consolidated Regulations for Treatment, Storage, Processing, or Disposal of Solid Waste

   Chapter 1. General

   Article 1. Purpose, Scope and Applicability of This Subdivision

   20090. SWRCB - Exemptions. (C15: S2511)

   The following activities shall be exempt from the SWRCB-promulgated provisions of this subdivision, so long as the activity meets, and continues to meet, all preconditions listed:

   (b) Wastewater —Discharges of wastewater to land, including but not limited to evaporation ponds, percolation ponds, or subsurface leachfields if the following conditions are met:

(1) The applicable RWQCB has issued Waste Discharge Requirements permits, reclamation requirements, or waived such issuance;

(2) The discharge is in compliance with the applicable water quality control plan; and

(3) The wastewater does not need to be managed according to Chapter 11, Division 4.5, Title 27 of this code as a hazardous waste.

Based upon a review of the above regulations and discussions with RWQCB staff, it is assumed that the design of evaporation ponds presented herein complies with the exemption criteria above, and they would be granted permits by the RWQCB.

Analyses of existing foundation soil hydraulic conductivity and pond groundwater flow characteristics show a need for a cell liner to meet the recommended 1×10^{-6} cm/sec foundation permeability and perimeter drains to mitigate the infiltration of brine from the evaporation pond into the groundwater. Evaporation pond seepage models have been developed based upon a review of the available hydraulic conductivity data. The models estimate the flow patterns at a steady state condition. In general, figure 39 shows results of both laboratory and field hydraulic conductivity (permeability) testing.

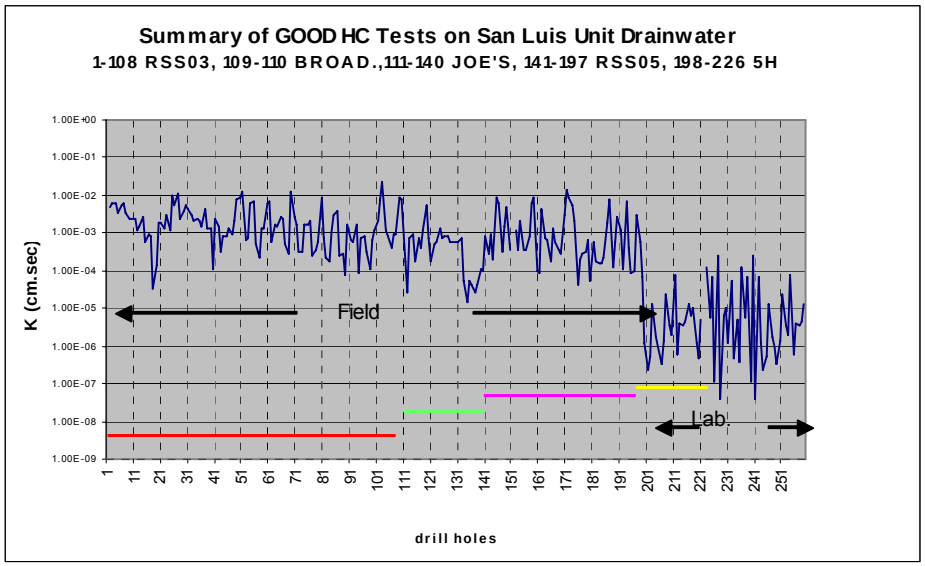

Figure 39. Hydraulic conductivity testing results (field and lab)—site permeability.

The data shows a vast discrepancy between hydraulic conductivity measured in the field and that measured in the laboratory. It was concluded that field data best represents the in situ hydraulic conductivity and the following estimated values were utilized in this feasibility design:

Silty Sand (SM)	10^{-3} cm/sec
Silts to Lean Clays (ML to CL)	10^{-4} cm/sec
Lean to Fat Clays (CL to CH)	10^{-5} cm/sec

The measured laboratory values are greater than the foundation soil hydraulic conductivity of 1×10^{-6} cm/sec recommended by the RWQCB. Discussions with RWQCB have indicated that the use of perimeter interceptor drains may provide adequate collection of seepage from the evaporation pond cells to reduce contamination of the groundwater to acceptable levels, although they have not defined what is adequate or acceptable. The perspective presented by the RWQCB is that the seepage would act as a "bubble" on the existing groundwater and would flow laterally until it leveled itself out. If perimeter drains were placed to the depth of the existing groundwater, recovery of the seepage flowing on top of the existing groundwater would be possible. This condition was modeled using the computer program SEEPW and was found to be true, but only for seepage flow local to the cell walls. A steady state representation of this is shown in figure 40. Figure 41 shows the flow patterns of a cell and follows the path of seepage farther away from the localized conditions by the cell wall.

The option shown in figure 42 is the seepage pathway at steady state with a clay liner. Even with clay liners, there is a need for perimeter drains to collect seepage losses from the cells.

It should be emphasized that it is not the loss of water that is of concern, but the seepage loss of salt and other constituents from the brine in the evaporation pond to the underlying groundwater. For example, using the estimated values in the Northerly Area for influent salinity (12,400 mg/L) and flow rate (4,800 acre-ft/yr), it is estimated that approximately 80,000 tons per year of salt would enter the Northerly Area evaporation pond. Using a clay liner having a permeability of 1×10^{-6} cm/sec and assuming a seepage recovery rate from the interceptor drains of 90%, there would be a net seepage loss to the underlying groundwater of about 10,000 tons of salt per year. The graph in figure 43 shows the estimated salt loss for the Northerly Area evaporation pond for different foundation permeability and seepage recovery rates. The use of a geomembrane liner presumes that there would be no seepage, which is represented by the red diamonds on the horizontal axis on figure 43.

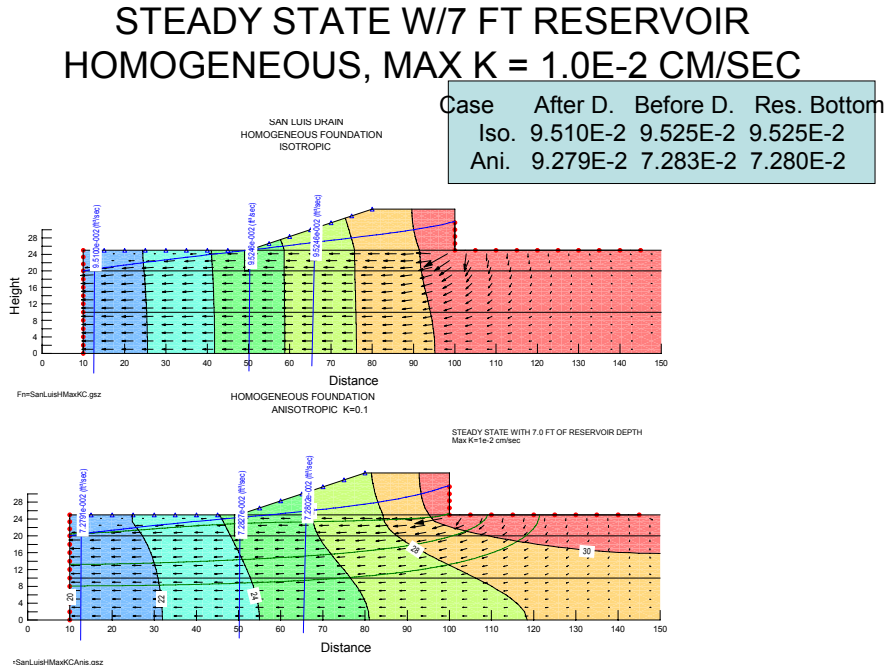

Figure 40. SEEPW output of steady state flow local to embankment wall.

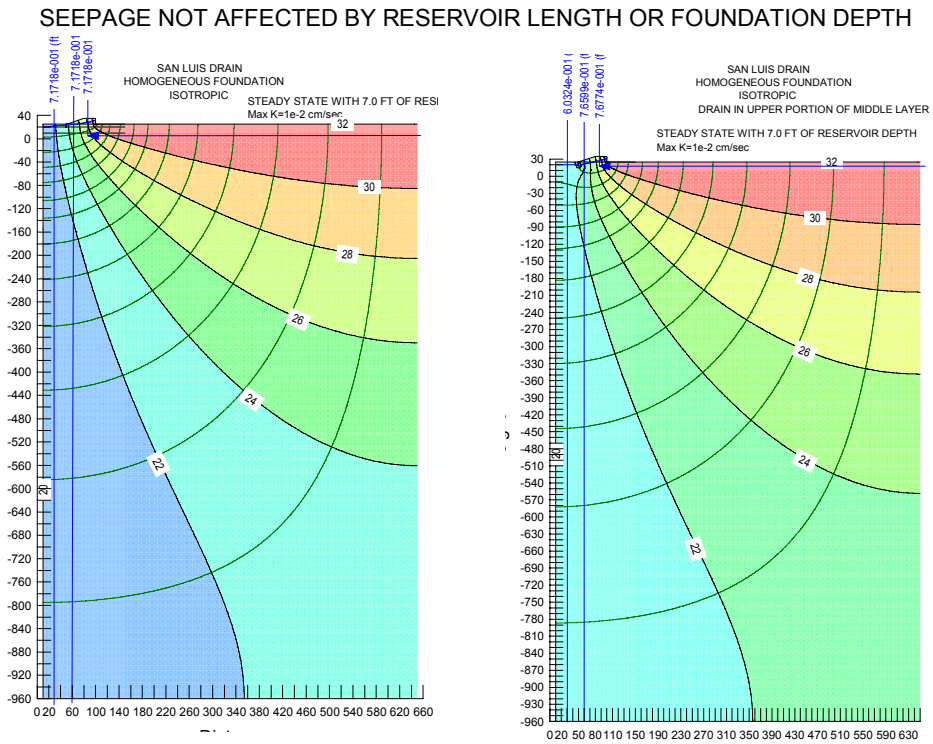

Figure 41. SEEPW output showing seepage from a cell without a liner.

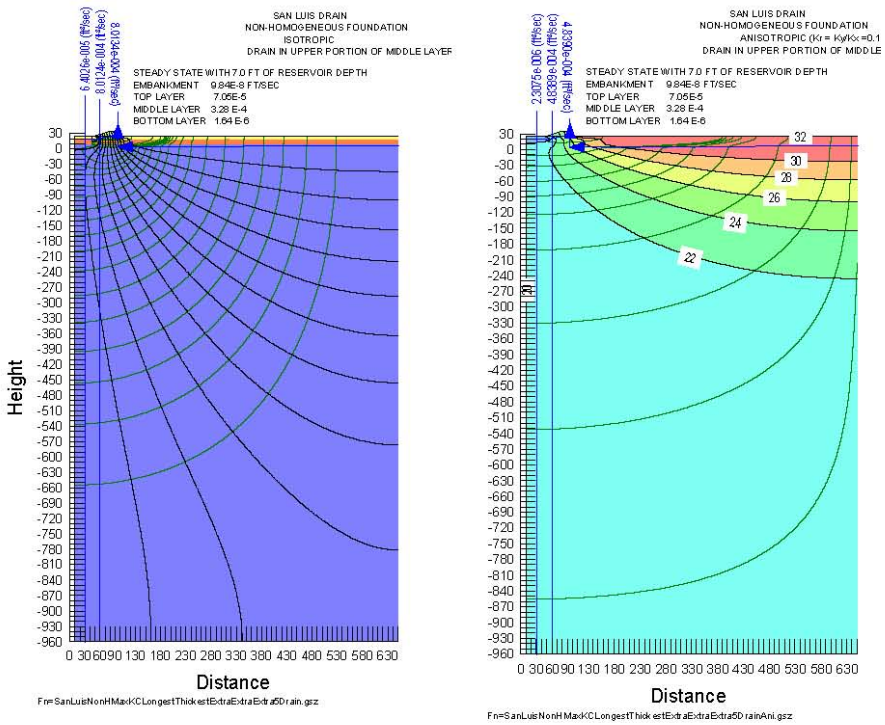

Figure 42. Seepage at steady state from a clay-lined cell.

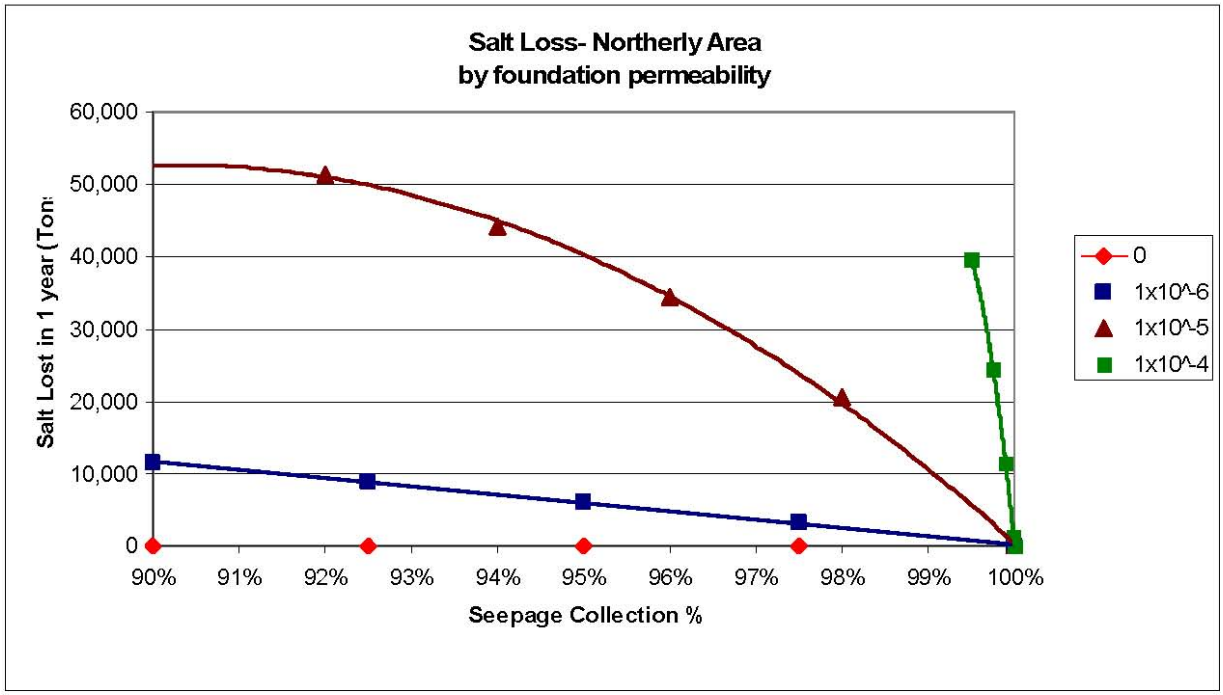

Figure 43. Evaporation pond salt loss versus seepage.

Designs, quantities, and cost estimates were developed for both clay and geomembrane cell liners and perimeter drains placed at existing groundwater levels. The cost estimate for geomembrane liners (instead of the clay liner option) was selected for inclusion in the overall feasibility cost estimate for evaporation ponds.

Surface Water Concerns

The layout of the evaporation pond facility takes into consideration surface water runoff, which is a concern for the Northerly Area evaporation pond due to the existing main drainage ditch that crosses through the middle of the pond facilities. The design of the Northerly Area evaporation pond allows for existing surface water drainage ditch and pathways to remain intact and functional.

Environmental Mitigation Facilities

The Northerly Area includes features specifically designed to mitigate potential impacts to resident and/or migratory birds that are susceptible to selenium toxicity through exposure to the project evaporation ponds. These potential environmental impacts were evaluated in the EIS, which utilized models to estimate the impacts and estimate quantities of mitigation land area for (1) AH and (2) compensation habitat (CH). The EIS acknowledges that the assessment of potential impacts to birds and estimates of mitigation needed are highly uncertain. This feasibility study appendix does not technically evaluate these EIS estimates of potential impacts or required mitigation, but rather this appendix provides designs and cost estimates for the quantities and types of mitigation as specified in the EIS. The mitigation facilities described in this section address the potential environmental impacts of the evaporation ponds only. The facilities described herein are not intended to address potential environmental impacts resulting from other project features.

Mitigation Planning

Mitigation planning was conducted with collaborative discussion and review by an interagency mitigation workgroup including participants from the U.S. Fish and Wildlife Service, Central Valley Regional Water Quality Control Board, California Department of Fish and Game (DFG), URS Corporation, and Reclamation. Information on wildlife habitat site plans and management considerations was obtained from resource managers at Mendota State Wildlife Management Area, TLDD, Gragnani Farms, Westlake Farms, Kern National Wildlife Refuge, and DFG.

There are three functional inputs in planning for mitigation facilities:

1. Evaluation of project designs and operations that cause environmental impacts. Project design and operations refers to measures that are directly

incorporated into the construction of project drainwater management facilities or operating criteria that can effectively mitigate (avoid, protect, or minimize) the exposure or hazard risks.

2. Preparation of designs and cost estimates to develop habitats to mitigate those impacts. Habitat sites would be constructed and managed to accomplish mitigation objectives. An array of mitigation habitat types (e.g., alternative, compensation), targeted bird groups (e.g., shorebirds, dabblers, diving ducks), and site management factors are integrated to develop designs and cost estimates.

3. Development of plans for operating, monitoring, and modifying the mitigation facilities. Operating and monitoring measures include activities that are required for permit compliance and maintenance. An overview of these processes is shown in table 27.

Environmental Impacts and Estimates of Mitigation Requirements

The risk analysis and assessment of environmental impacts in the EIS were developed using design and operational parameters associated with the selenium biotreatment plant and evaporation ponds. The design and operational features of these drainage service components presented in the EIS are considered appraisal level. There are significant differences between the appraisal designs of the evaporation ponds presented in the EIS and feasibility designs presented in this appendix. Due to scheduling constraints, some of these changes were incorporated into the EIS impacts analysis, but some were not.

For example, the feasibility design of evaporation ponds resulted in slightly smaller evaporation ponds and a significant reduction in the amount and frequency of expected shallow pond conditions (<4 feet of pond depth) as compared to the appraisal design. These feasibility level design changes could potentially significantly reduce the environmental impacts and mitigation requirements, but they were not available for the EIS analyses.

Mitigation facilities would be constructed and managed to provide habitat for bird groups that are impacted by the evaporation ponds. The EIS analyses determined that three different types of mitigation habitat would be required: shallow water AH, shallow water CH, and deep water CH. The EIS developed initial estimates of land area required for each of the three habitat types. Given the uncertainty in these initial estimates, the EIS recommends a contingency allowance of land area equal to the initial estimates. The habitat types and estimates of required land area as defined in the EIS are described in the paragraphs below.

Alternative Habitat

AH is directed specifically to potential impacts on both breeding and nonbreeding shorebirds that visit evaporation ponds. Given that evaporation ponds will be constructed with vertical side walls, the only potential opportunity for shorebird

Table 27. Mitigation planning components

Measures established as part of overall project evaporation facilities and mitigation habitat sites – design, construction, management:		Followup monitoring and adaptive adjustment measures:
Project design and operations	Mitigation habitat site facilities	Monitoring and adaptive management
Features incorporated into project facilities for mitigation goals ↓ ↓ ↓	Based on defined habitat types and functional objectives ↓ ↓ ↓	Facility operations, mitigation sites, defined biological criteria ↓ ↓ ↓
Design/operation assumptions: (a) Vertical embankments at evaporation ponds to minimize shorebird exposure (b) Occasional pond drawdowns that provide opportunity for use by shorebirds and dabbling ducks (c) Manage aquatic food sources and wetland crops to discourage diving and dabbling duck use (d) Use hazing, ribbons, fencing, water control to deter bird use or reduce hazard risks	Mitigation habitat types: alternative habitat compensation habitat, deep water compensation habitat, shallow water Bird Guilds: Breeding and nonbreeding shorebirds, dabbling ducks, and diving ducks	Examples: Evaporation facility monitoring operations monitoring biological monitoring Mitigation site monitoring site management to maintain identified habitat functions mitigation measurement and performance criteria Contingencies and adaptive management plans onsite contingency plans mitigation expansion within predefined allowances
↕	↕	↕

The mitigation components shown are inter-related and may influence future planning stages. In particular, monitoring and performance evaluations conducted for the initial mitigation phase may result in changes in the conditions or criteria applied to subsequent adaptive mitigation development stages.

use is during periods when the impounded water is shallow (<4 feet deep). The EIS analysis assumes that there will be occasional, temporary periods when the water level in some evaporation cells will drop below 4 feet, thus providing opportunity for shorebird use.

Functional objectives for AH center on attracting birds away from the hazard exposure by providing more attractive habitat in the nearby landscape. Assuming that the birds will visit both the evaporation ponds and the AH site, the effect of the AH is to dilute the dietary toxin intake by providing a clean alternative food

source. Proximity to the evaporation ponds is necessary to provide the opportunity for attraction to the AH site; therefore, potential AH sites should be located within a 1-mile radius of the evaporation ponds. The amount or area of AH mitigation is calculated based upon the area of evaporation ponds that is expected to have shallow water conditions.

Compensation Habitat

Impacts that deplete migratory bird populations require CH to replenish lost birds. CH sites may be located anywhere within the impacted range of bird use. By definition, CH mitigates for bird losses and, therefore, is provided after the bird losses are known. Mitigation planning requires an initial estimate of these losses to develop feasibility designs and cost estimates. CH includes shallow and deep water components, which target specific bird guilds; and preference is given to potential sites that are at least 3 miles from the evaporation ponds.

Shallow Water Compensation Habitat

Shallow water compensation habitat (CH-S) is designed for birds that inhabit water environments up to 1 foot deep (shorebirds and dabblers). The amount or area of CH-S mitigation is calculated based upon the estimated number shallow water bird losses, which is directly related to the area of evaporation ponds that is expected to have shallow water conditions.

Deep Water Compensation Habitat

Deep water compensation habitat (CH-D) is designed for birds that inhabit water environments greater than 4 feet deep (divers). The amount or area of CH-D mitigation is calculated based upon the estimated number of deep water bird losses, which is directly related to the deep water area of the evaporation ponds.

Mitigation Land Areas – Initial Estimates and Contingency Allowance

The EIS analyses provided estimates of the required mitigation for each of the three habitat types described above. These estimates are referred to as the "initial estimates" because they are the amount of mitigation habitat areas that would be constructed initially along with the construction of the other drainage service components. Once the drainage service has begun, the evaporation and mitigation facilities would be monitored to re-evaluate actual impacts to birds and the efficacy of the AH and CH to mitigate those impacts.

The EIS recognizes that the initial mitigation estimates are highly uncertain and that actual mitigation requirements (determined after monitoring) may be less than or greater than the initial estimates. If less mitigation is required, then the habitat areas may subsequently be reduced in size. If more mitigation is required, then additional habitat would be constructed in a second phase. A contingency allowance of land area is included in the designs and cost estimates to account for the potential second phase of mitigation construction. The process of initial construction, monitoring, re-evaluation, and subsequent adjustments to the mitigation habitat land areas is referred to as adaptive management. The

EIS initial estimates of required mitigation land area and the adaptive management contingency allowance for each of the three habitat types in the Northerly Area are shown in table 28.

Table 28. Initial estimates and contingency allowance of mitigation land areas for the Northerly Area[1]

	Shallow water AH (acres)	Deep water CH (acres)	Shallow water CH (acres)	Totals (acres)
Initial mitigation estimate	182	79	13	274
Adaptive/contingency allowance	182	79	13	274
Total area estimated for this alternative	364	158	26	548

[1] Mitigation area estimates assume evaporation basin inflow total selenium less than 10 µg/L, nearly vertical side walls, and water depths maintained above 4 feet deep.

Selection of Potential Mitigation Sites

The initial site inventory review identified a total of 41 areas as potential sites for establishing mitigation habitat. These areas were screened against factors such as proximity to project drainage service facilities, land use or land retirement tracts, existing habitat, groundwater conditions, and proximity to the water supply, and outflow conveyance systems. The selected mitigation sites meet the site criteria for AH and CH site development and are shown in figure 2. Additionally, an aerial photograph of the AH sites is provided in figure 44. The areas shown in these two figures are larger than the specified land area estimates (refer to table 28). It is assumed that habitats would be constructed within these areas, but final selection would occur during final design.

Mitigation Habitat Designs and Cost Estimates

Site plans were developed for each type of mitigation habitat (AH-S, CH-S, and CH-D) to represent typical conditions and considerations for feasibility evaluations. These site plans are used to assess construction cost elements such as containment dikes, water controls, and specific site habitat features. Site plans were also used to evaluate annual cost factors including water supply, site management, and monitoring. Site plans for each habitat type are developed with enough detail to capture major cost elements, such as site grading necessary to establish target water depths and related water control systems and maintenance access features. Specialized habitat features are also included, such as perimeter moats to deter bird predators and islands to produce protected habitat zones. Feasibility site plans incorporate enough detail to accommodate critical habitat functions, operating conditions, and long-term management needs.

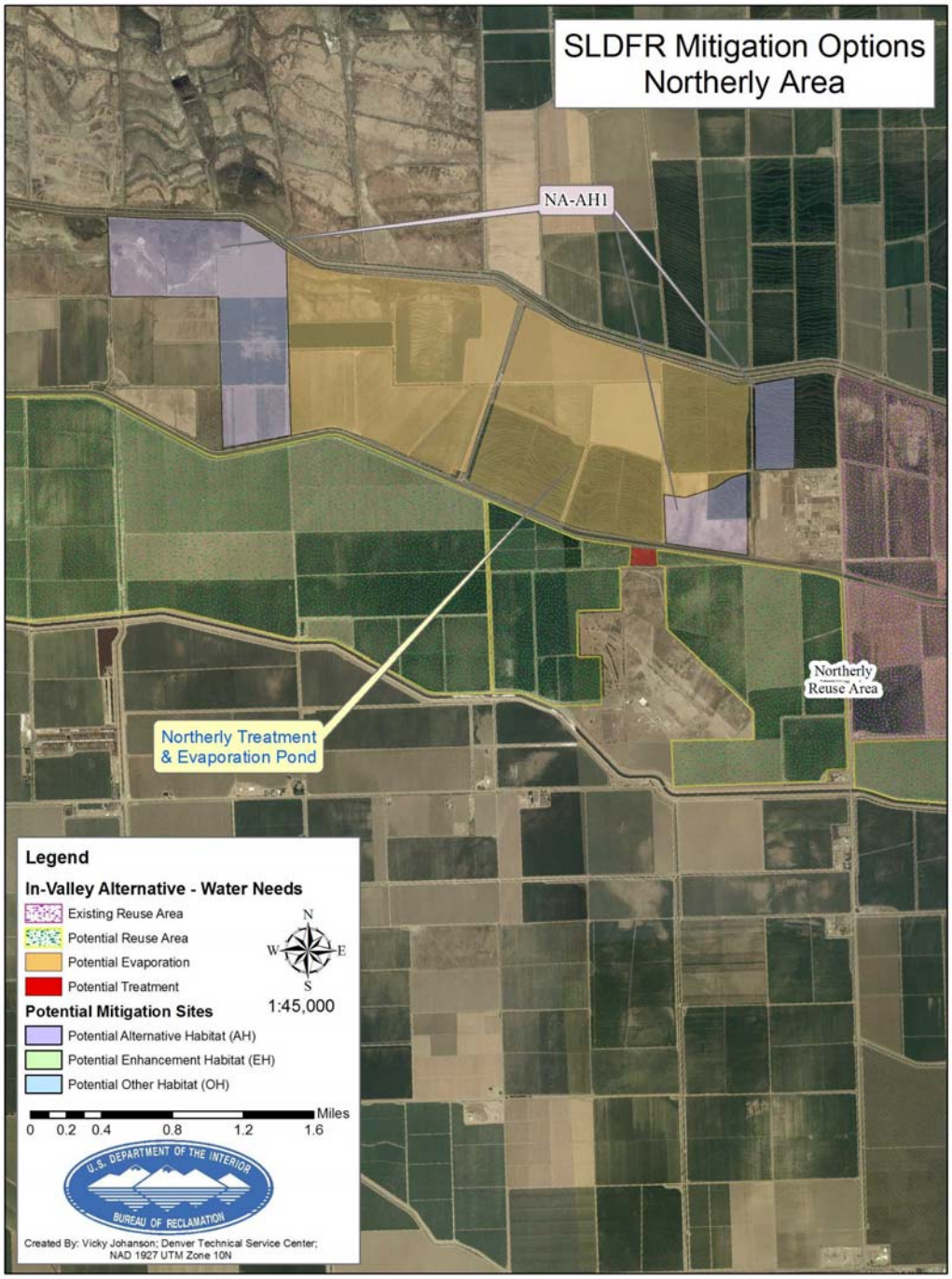

Figure 44. Aerial view of proposed locations for Northerly Area Alternative habitat.

Eighty-acre Representative Management Units

Design layouts for each habitat type were based on a representative 80-acre (⅛-section) unit area. This is consistent with typical management units established at wildlife refuges (e.g., Kern National Wildlife Refuge, Mendota State Wildlife Management Area). Dividing large areas into 80-acre units is considered a practical basis for managing large areas. Quantities and cost estimates were developed for 80-acre units of each habitat type and then prorated to the mitigation land area estimates provided in the EIS (refer to table 28) to calculate the total cost estimate for mitigation facilities.

Site Topography and Grading

The slope of site lands can significantly affect the amount of earthwork grading required to establish semi-aquatic habitat features. The selected habitat areas indicate general locations because final locations would be determined later. The general topography of this selected area is fairly flat, with about a 4-foot drop per mile or a slope of less that 0.1%. It appears possible to layout habitat units (cells) in a stepwise pattern down the slope to minimize grading in each cell. A 1-foot drop across the short side of rectangular cells was assumed, resulting in a net

balance in cut and fill that could be accomplished with minimal impact on the height of containment dikes or grading required to create small island features.

Offsite Water Conveyance and Onsite Water Controls

Inflow conveyance systems assume water supplies are available from the existing nearby irrigation systems. Inflow controls consist of a simple 6-inch gate valve, water meter, and standpipe used to regulate water from a pressure irrigation pipeline. Outflows from the site are collected in outlet boxes and conveyed for reuse or discharge. Discharge conveyance length was based on the distance to Fresno Slough. This is a conservative assumption because, in practice, water flow through the sites may be reused on nearby lands or discharged to open drains without piped conveyance.

Water depths for each habitat type are controlled using stop-logs or weirs installed in the outlet control boxes. For the larger multicell mitigation sites, gravity flow is assumed possible between cells. This could reduce the actual conveyance and inlet control system costs for those units. For all habitat types, each 80-acre unit has one inlet control and two outlet boxes. Having two outlets allows flexibility for maintenance and distributing flows within the site to manage avian diseases associated with stagnant conditions (e.g., avian botulism or cholera). See drawings 805-D-10436 and -10437 for design details of water supply, outlet structures, and access ramps.

Operational water depths are defined to develop estimates of site grading costs for each mitigation type. Both the AH-S and CH-S are designed for shallow water with very mild bank slopes to low resting islands. The CH-D site plan integrates depth zones for overwintering and seasonal habitat management.

- Shallow water habitat: 0- to 1-foot depth control with areas 4 to 6 inches targeted for shorebirds and slightly deeper water for dabblers.

- Deep water habitat: zones having 0- to 1-foot depth for shorebirds, zones having 1- to 3-foot depth for dabbling birds, and zones having 3- to 5-foot depth for diving birds.

Shallow Water Alternative Habitat (AH-S) Site Plans

A representative site layout for AH-S is shown in drawing 805-D-10433. This site plan produces shallow wading, feeding, and resting habitat to attract shorebirds and dabblers away from the evaporation basin facilities. Vertical walls and operating depth criteria were incorporated into evaporation basin plans to effectively eliminate exposure for these guilds under normal operations. As a result, the AH-S sites now focus on mitigating impacts of evaporation basin drawdown, and the shallow AH habitat is closely tied to evaporation facility operations. These sites are typically filled in spring in advance of predicted evaporation basin drawdown or when actual bird exposure is observed. The AH-S sites are dried part of the year to allow for weed removal, re-grading, or other site restoration work.

Water supply for these mitigation sites would be provided by project irrigation water from nearby supply systems. Alternatively, the potential to use treated water from the RO system has been raised, but the suitability of this source with respect to mitigation requires further review.

The AH-S site plans combine shallow water with dry bank zones. The layout also includes a perimeter moat to keep predators out of the center habitat area. Water 4 to 6 inches deep and low islands make up most of the area. The slightly deeper swales provide dabbler habitat and allow gravity flow and site drainage. Cut-and-fill earthwork is balanced onsite, and the internal grades vary gradually to allow minor re-working using light grading equipment.

The wetted surface area occupies about 74% of the total 80-acre unit. Together, the shallow water and dry roosting habitat make up about 93% of the area with the remaining site area used for the perimeter moat, containment berm, and access road. The estimated water volume is about 28 acre-feet for an 80-acre unit.

Deep Water Compensation Habitat Site Plans

A representative site layout for CH-D is shown in drawing 805-D-10434. This site plan integrates deep water (3 to 5 feet) for diving birds with mid-depth (1 to 3 feet) areas for dabbling ducks. Islands and shallow bank areas provide cover and enhance habitat diversity. The potential for seasonal shorebird habitat management is also considered in the site layout.

The primary mitigation objective is to provide over-wintering habitat for dabbling and diving birds. Open water habitat commonly established at wildlife refuges and duck clubs focuses on dabbling ducks. The CH-D site plans include water up

to 5 feet to provide deeper water that divers use for food and cover. The site plans also integrate a range of water depths to enhance the overall site habitat values for a more diverse array of bird guilds.

For this habitat type, the predator moat is integrated directly into the deeper water areas. The water surface areas for deep (3 to 5 feet), mid (1 to 3 feet), and shallow (0 to 1 feet) occupy about 50, 14, and 13%, respectively, of the total 80-acre site area. At high pool, this results in total overwintering water surface area of about 71 acres or 88% of the site area. The remaining unaccounted site area is occupied by islands and site access features.

Shallow zones are created along the deep water shoreline and between the islands shown in the site plans. Islands are clustered to allow access for O&M and to isolate different habitat zones. Outer island banks are expected to support some wetland plants to provide cover and nesting areas, while the mid-depth areas between islands are flooded at high water levels in the winter and then can produce shallow soil wading areas for shorebird use at low water levels in the spring. This type of seasonal site management appears feasible because the deep water habitat is directed to overwintering for dabbling and diving birds, whereas shorebird values can be enhanced spring to summer. Integrating habitat functions provides more operational flexibility and greater species diversity, overall habitat value, and potential for effective mitigation than single function sites.

If the water levels are lowered by 1 to 2 feet in the spring, mid-depth zones would become shallow water, and the shallow water areas between islands would form a mud flat bench area. Minor grading variations are designed to correspond with seasonal site water management plans. The total 51 acres of overwintering water surface and 10 acres +/- shallow area results in about a 5:1 ratio, or roughly equal to the target total area ratio for CH-D and CH-S. As a result, it appears that water levels could be managed seasonally at the CH-D site during the initial phase to evaluate shorebird habitat values as an additional benefit and an effective mechanism to integrate the two mitigation types directly within one facility.

Shallow Water Compensation Habitat Site Plans

A representative site plan layout for shallow water compensation habitat, CH-S is shown in drawing 805-D-10435. This site plan is designed for shorebird breeding habitat based on the existing mitigation facility at TLDD. Rows of shallow water at 4 to 6 inches deep used for shorebird feeding are separated by mild sloping island rows for resting/nesting. The simple layout is adapted from the TLDD facility. However, the final site plans could incorporate other features, such as deep zones to enhance invertebrate production (bird food), sinuous channels to help inhibit predation, or to integrate the primary shorebird breeding functions with other features to establish specific habitat values or enhance habitat diversity.

Site water supply systems include an inlet channel that distributes inflow to each channel row. An outlet channel collects and conveys water to the outlet control

box. Water depths in all channels are regulated by the outlet box weir. About two-thirds of the internal surface area is open water (feeding), and one-third is dry bank for resting and nesting. Grade slopes between the water and island rows are very mild at about 12:1; the maximum island height is 18 inches. These sites are only operated from April through July. After July, the entire site area is allowed to dry to minimize weed growth and conduct annual site maintenance.

For this site layout, the total open water surface area (without moat) is about 46% of the total 80-acre site area. Collectively with the low nesting islands, the total habitat area is about 84% of the total site. In this case, a greater proportion of the area is used for the separate moat, access, and water conveyance features. Total volume of the shallow water habitat (excluding moat) is about 15 acre-feet.

The moat surrounding the site area is an important feature because the open rows are particularly susceptible to predation by mammals. An electric fence could be added or used in place of the moat. Although not shown in the site plans, electric fencing is included in the CH-S cost estimates. Whether or not both measures are necessary may be evaluated after initial site operations.

Although this CH-S site plan has proven performance for nesting, the bird survival and effective population recruitment are unknown. As a result, this habitat type could be applied after monitoring the CH-D habitat to evaluate the integrated deep and shallow water strategy.

Potential Integration of CH-D and CH-S Habitats

As noted previously in the CH-D and CH-S site plan descriptions, the potential to directly integrate these two mitigation types within a single site appears possible partly because there is much less site area projected for CH-S in proportion to the CH-D area and the different seasons and target water depths associated with these habitat types may allow for seasonal site management to effectively achieve both functions. These attributes also could be evaluated during initial project phases to obtain information available to adapt mitigation plans in the following mitigation stages. The ability to combine and integrate these two habitat types into a single mitigation site would eliminate costs associated with developing separate CH-D and CH-S mitigation site areas.

Enhancement Habitat

Enhancing existing undeveloped lands or restoring marginal depleted habitat can provide a more practical and cost-effective means to contribute toward mitigation objectives. For example, creating habitat on crop land could be more expensive and have greater uncertainty than enhancing habitat on more suitable lands. Potential enhancement habitat sites should be considered in final design based on site development conditions, proximity to water supplies, or other apparent resource management considerations.

Construction Cost Estimates

Cost estimates to construct 80-acre mitigation habitat units include site grading, earthwork to create habitat features, access roads, water controls (inlet valves and outlet boxes), and conveyance systems. Cost estimates include construction of mitigation in two phases.

Proposed Facilities for Westlands

This section presents the feasibility designs for the proposed facilities in Westlands. These facilities are applicable to the In-Valley/Water Needs Land Retirement Alternative only, since all drainage-impaired farmlands in Westlands would be retired under the In-Valley/Drainage-Impaired Area Land Retirement Alternative. For convenience, and to be consistent with previous project studies, designers elected to divide Westlands into three regional subareas: Westlands North, Westlands Central, and Westlands South (refer to figure 3).

Each of the three Westlands subareas would have its own independently operated, regional treatment and disposal facilities (RO and biotreatment plants, as well as evaporation ponds). The geographic boundaries of each subarea are defined by the reach of the collection system pipelines that contribute drainage to its regional treatment and disposal facilities. The proposed facilities for each of the three Westlands subareas are shown geographically on figures 45, 46, and 47. The depictions of facilities shown on these figures are useful in understanding the designs of drainage service features presented in the remainder of this report.

Drainwater Quantity

Groundwater and drainage analyses conducted in the EIS (refer to appendix C in the EIS) developed some of the fundamental parameters used to project drainwater quantity, such as quantity of drainage-impaired lands. Specifically, the EIS developed the following assumptions:

1. **Quantity of drainage-impaired lands**: There are approximately 604,000 acres of farmlands in Westlands, of which about 298,000 acres are considered to be drainage-impaired.

2. **Retired lands**: The proposed facilities for the 298,000 acres of drainage-impaired lands in Westlands include 184,000 acres of retired lands: 44,106 acres retired previously, plus 139,850 additional acres. Drainage service features would be constructed to provide drainage service for the remainder of the drainage-impaired farmland in Westlands, about 114,000 acres.

3. **Quantity of lands having installed tile drains**: Of the 114,000 acres of drainage-impaired lands that would remain in production, it is reasonable to expect that not all of these lands would actually have subsurface drainage systems installed. Some farmers would elect not to drain based

on economic considerations. Therefore, it was assumed that two-thirds of the drainage-impaired areas that remain in production (i.e., about 76,000 acres) would actually have subsurface drainage systems installed. A modeling effort analyzed this assumption and found that sufficient arability of the root zone within the entire drainage-impaired area can be maintained with this drainage condition.

4. **Drainage rate**: The drainage rate from future Westlands' on-farm tile drains is projected to be 0.35 acre-ft per tiled acre, which was derived using a variety of modeling and analytical tools. It is assumed that Westlands farmers will implement on-farm source control measures to increase irrigation efficiency and reduce the drainage rate to 0.25 acre-ft per tiled acre.

These assumptions and their underlying analyses in the EIS provide the foundation for concluding that the drainage quantity estimates and proposed Federal drainage system capacity are feasible and adequate to achieve the project purpose (i.e., "… a long-term, sustainable salt and water balance in the root zone of irrigated lands…"). The EIS assumptions were adjusted slightly during the feasibility analyses as follows:

- The assumed area of lands having tile drains installed was reduced from 76,000 acres to about 73,000 acres because some land areas would be acquired for construction of drainage service features and converted to other uses (i.e., reuse facilities, evaporation ponds, and mitigation wetlands).

The net drainage rate after application of source control measures was increased from 0.25 acre-ft per tiled acre to 0.272 acre-ft per tiled acre, based upon further analysis of soils data and cropping patterns.

Phased Implementation of Drainwater Services

Westlands does not have existing drainage infrastructure that can be used for the proposed facilities, and the construction and implementation of drainage service features in Westlands will require years to complete. Drainwater flows, therefore, will increase gradually from zero to full capacity over a period of many years; however, it is impossible to predict precisely when and where farmers will install tile drains.

In order to estimate how drainwater flows will increase over time, feasibility designers assume that the schedule of construction of drainage features in Westlands could be prioritized and phased according to relative need for drainage service. The relative need for drainage service can be correlated with the depth to groundwater (i.e., the shallower the depth, the greater the need for drainage service). In other words, those locations in Westlands having the shallowest groundwater would receive priority for construction of drainage service facilities.

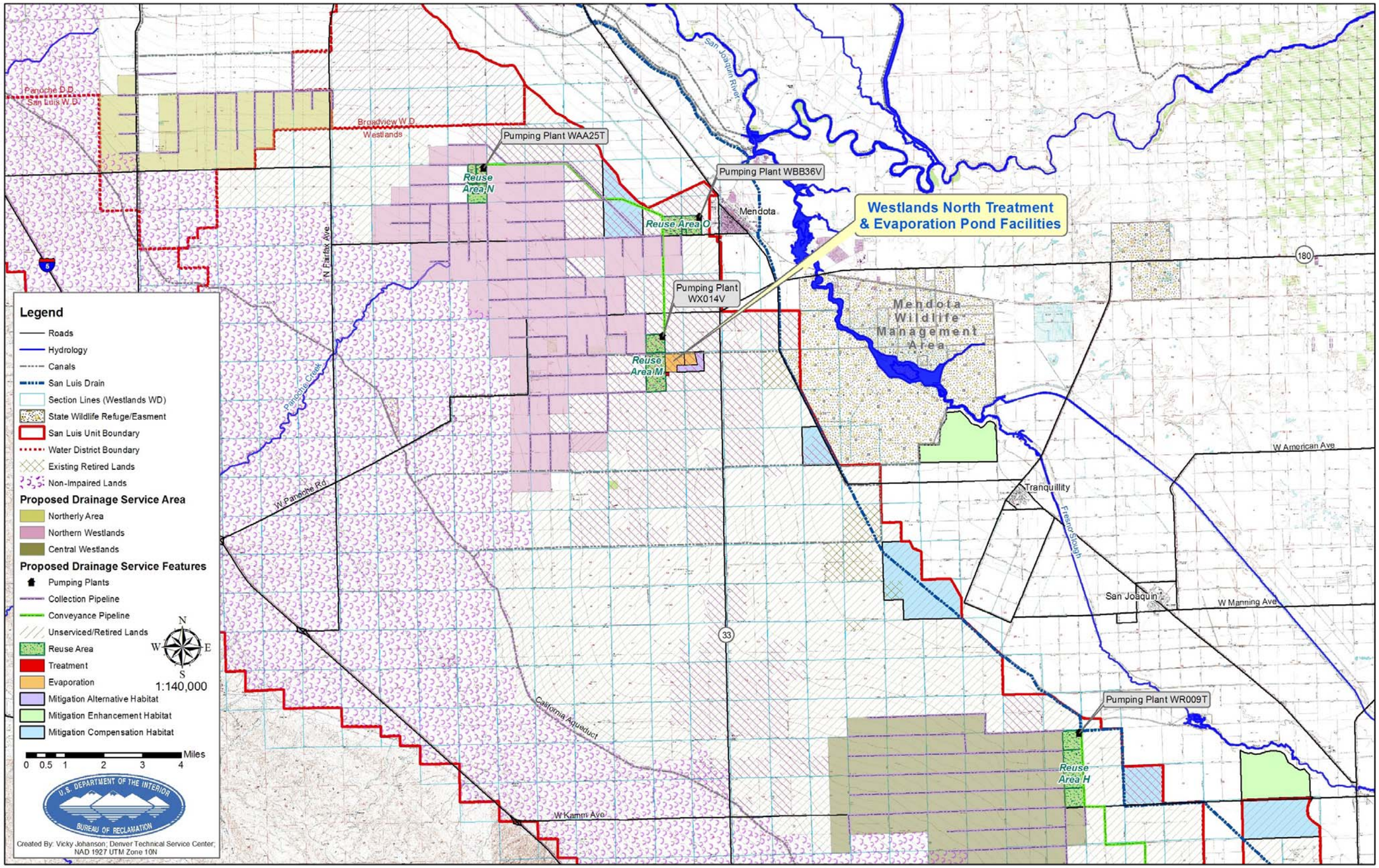

Figure 45. In-Valley/Water Needs Land Retirement Alternative features in Westlands North.

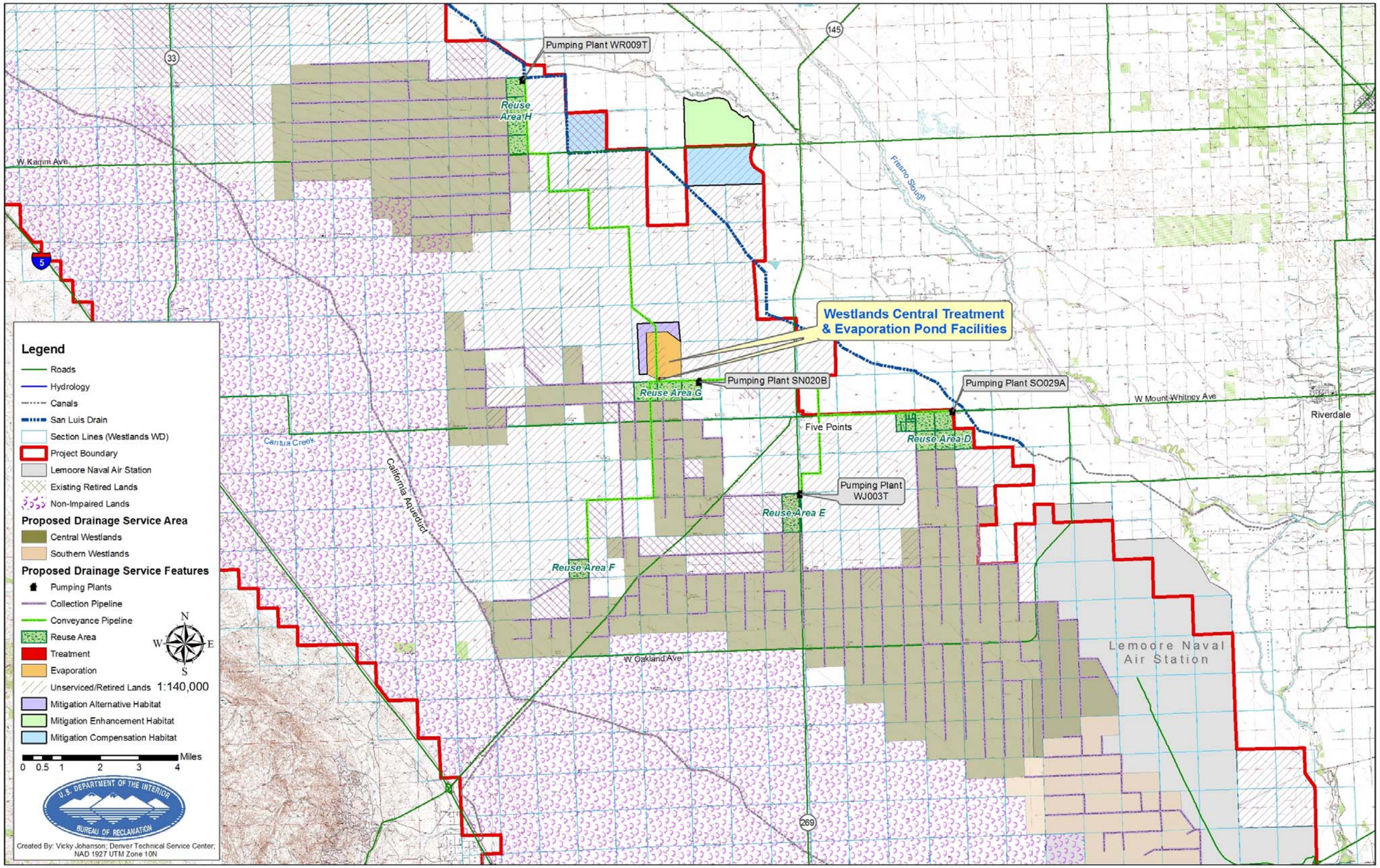

Figure 46. In-Valley/Water Needs Land Retirement Alternative features In Westlands Central.

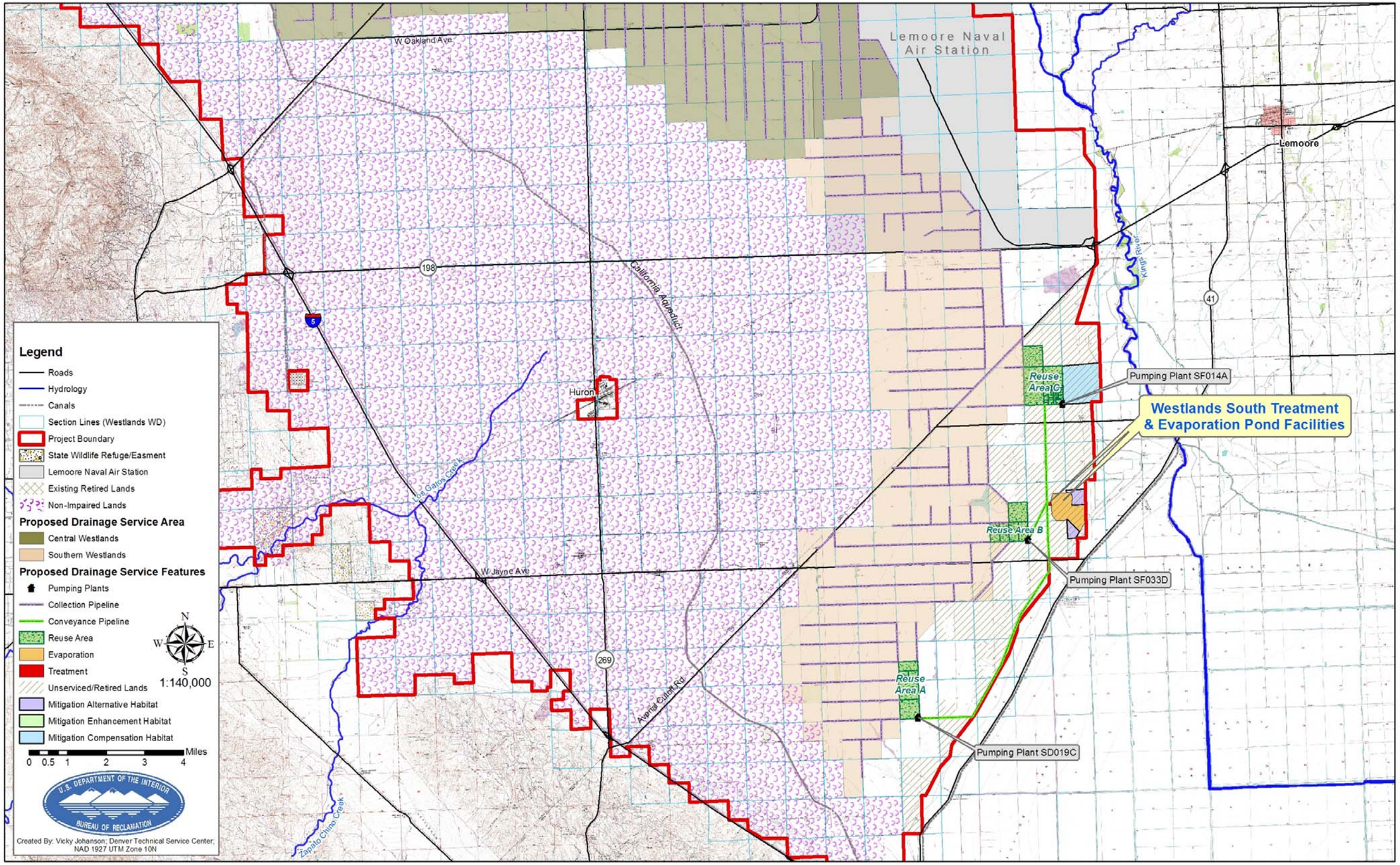

Figure 47. In-Valley/Water Needs Land Retirement Alternative features in Westlands South.

Existing groundwater table elevation maps were used to develop construction schedules and estimate the gradual rampup of drainwater flows to full capacity. A secondary factor in estimating drainwater flows is that not all farmers would immediately elect to install tile drains once drainage service becomes available. Based on these criteria, it is assumed that drainwater flows would gradually increase to full capacity over a 27-year period of time, well after the completion of construction of the drainage service facilities. Table 29 presents the estimated rampup drainwater flows, total acres drained, and total capacity flows, by subarea, based on the implementation year schedule shown in figure 6. The drainwater rampup assumes that farmers having the most urgent need would install tile drains within 5 years after construction is completed (through year 13). Afterwards, tile drain installation would occur more slowly.

Table 29. Westlands drained acres[1] and drainwater flow estimates[2]

Implementation Project Year	Westlands South		Westlands Central		Westlands North		Totals	
	Drained acres	Flow in acre-ft/yr	Drained acres	Flow in acre-ft/yr	Drained acres	Flow in acre-ft/yr	Drained acres	Flow in acre-ft/yr
0-7	0	0	0	0	0	0	0	0
8	0	0	5,720	1,557	0	0	5,720	1,557
9	0	0	7,447	2,027	6,300	1,715	13,747	3,742
10	6,558	1,785	16,507	4,493	6,300	1,714	29,366	7,993
11	8,887	2,419	23,110	6,291	6,300	1,715	38,297	10,424
12	15,235	4,147	27,565	7,503	6,300	1,715	49,100	13,365
13	18,225	4,961	30,661	8,346	11,953	3,254	60,840	16,561
14	18,593	5,061	31,040	8,449	11,953	3,254	61,587	16,764
15	19,447	5,293	32,107	8,739	11,953	3,254	63,507	17,287
16	19,447	5,293	33,653	9,160	11,953	3,254	65,053	17,708
17	21,047	5,729	34,287	9,333	11,953	3,254	67,287	18,316
18	21,047	5,729	34,933	9,509	12,380	3,370	68,360	18,608
20	21,153	5,758	34,933	9,509	12,380	3,370	68,467	18,636
22	21,367	5,816	35,623	9,696	12,380	3,370	69,369	18,882
24	21,367	5,816	35,787	9,741	12,487	3,400	69,640	18,957
27 (maximum)	**23,500**	**6,400**	**37,067**	**10,089**	**12,487**	**3,400**	**73,053**	**19,889**

[1] Estimated drained acres ~ two-thirds of drainage-impaired lands that remain in production.

[2] Estimated drainwater flow ~ 0.272 acre-ft per drained acre per year.

Westlands Drainage Service System Capacity

The proposed facilities for Westlands are designed to accommodate the maximum flows at full build-out as shown at the bottom of table 29. The drainwater flows into the Federal drainage collection system would be controlled and not subject to

large variations because the collection system is a closed pipeline system, in contrast to the open collection ditches in the Northerly Area that are subject to large flow variations.

Flow volumes through the drainage service system are reduced by two primary features: reuse facilities and RO treatment. Reuse facilities reduce the flow volume by 73% through ET where drainwater is used to irrigate salt-tolerant crops. The effluent discharges from the reuse facilities are conveyed to an RO treatment plant, which extracts 50% of the remaining flow volume as clean product water, which can be used for irrigation of commercial crops. The nominal flow capacities of the various features in the Westlands drainage service system are shown in the flow schematic in figure 48. A more detailed flow schematic for Westlands drainage service components is provided in figure 49.

Drainwater Quality

Projections of drainwater quality parameters were developed and analyzed in appendix C of the EIS. Groundwater quality data collected from monitoring wells in Westlands were tabulated and analyzed using groundwater and geostatistical modeling. The resulting projections of drainwater quality for flows into the proposed Federal drainage service system in Westlands are found in table C2-7 of the EIS. The feasibility analyses and designs presented in this appendix are based upon these influent drainwater quality projections from the EIS.

Drainwater quality is modified as it flows through the drainage service system and is an important factor in process design and material selection for all of the drainage service features. In the reuse facilities, drainwater quality is affected by ET, geochemical interactions with soils, and commingling with shallow groundwater. The impact of these interactions is analyzed and discussed in the "RO Treatment" section of this appendix because the plant design is highly dependent on the quality of drainwater that is conveyed to it from the reuse facilities

The RO treatment process extracts 50% of the flow volume as desalted product water, leaving behind a waste stream containing approximately double the initial concentrations of drainwater constituents. The concentrated waste stream from RO treatment is delivered to a biotreatment process, which removes about 99% of the dissolved selenium species. The selenium-depleted treated effluent from biotreatment is discharged to evaporation ponds, where the concentrated drainwater gradually evaporates and salts are precipitated. The biotreatment process extracts the selenium into a solid sludge, which is dried and transported to a licensed hazardous waste disposal facility.

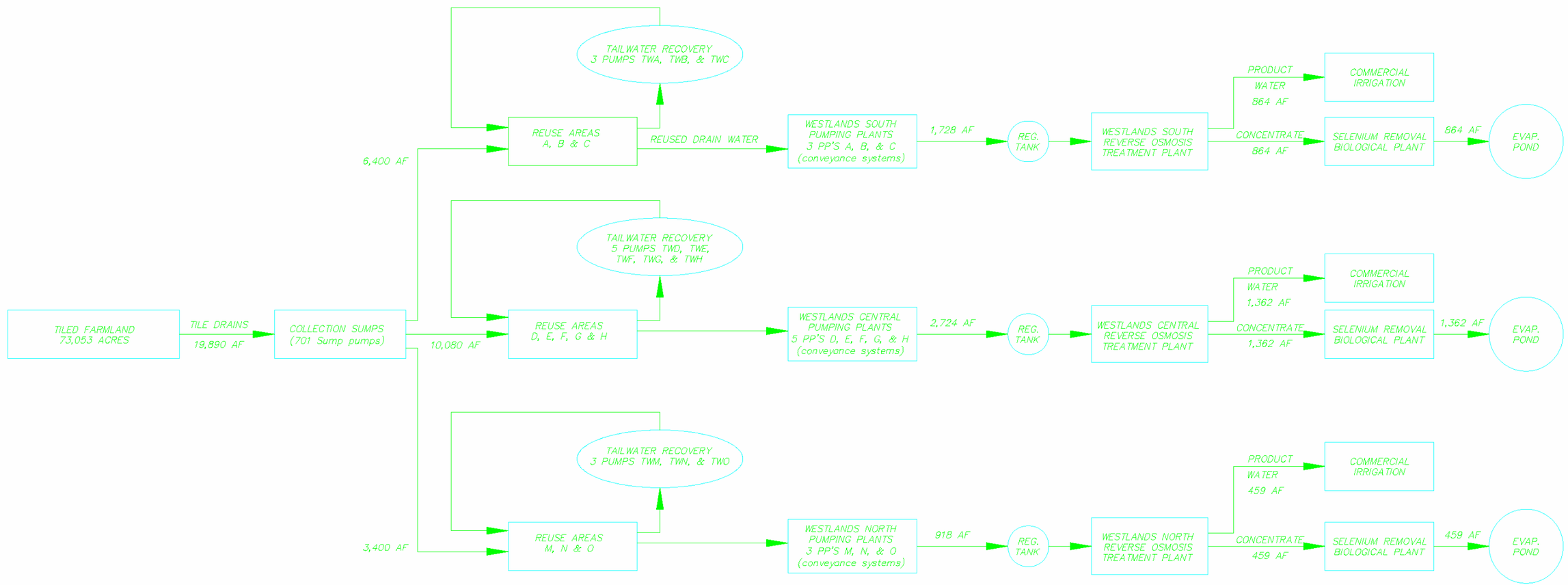

Figure 49. Flow schematic of drainage service in Westlands.

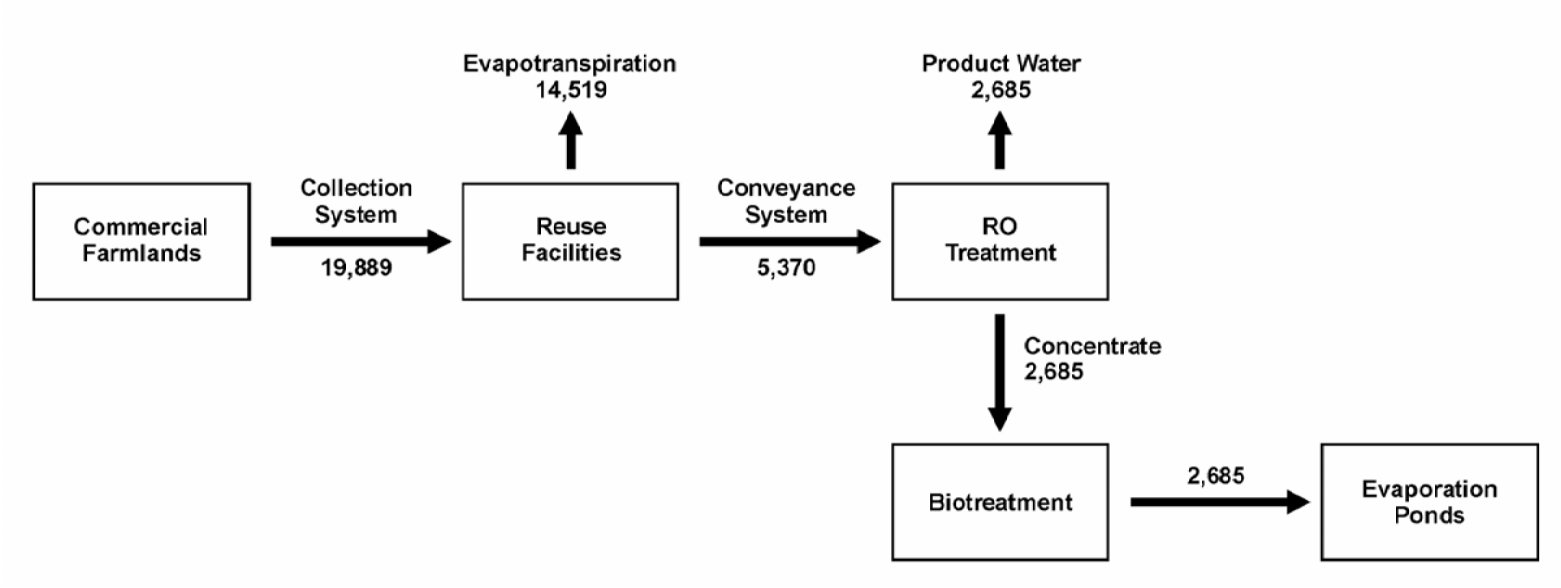

Figure 48. Nominal flow capacities of the various features in the Westlands drainage service system.

The significance of drainwater quality parameters to the feasibility designs is addressed within the descriptions of the drainage service components presented in the following sections.

Drainage Collection System

Reclamation would construct a closed collection system to collect and convey subsurface drainwater from on-farm subsurface tile drain systems to 11 different reuse areas within Westlands. The EIS analyses determined that there are about 298,000 acres of drainage-impaired lands in Westlands. Under this alternative (In-Valley/Water Needs Land Retirement Alternative), however, about 184,000 acres of these lands would be retired and about another 4,000 acres would be acquired for project facilities. The collection system would provide drainage service to approximately 110,000 acres of drainage-impaired farmlands to sustain commercial agricultural productivity throughout the planning period for this project (50 years).

The EIS also developed analyses to support the assumption that only two-thirds of the drainage-impaired lands remaining in production (or about 73,000 acres) would have subsurface tile drains installed and connected to the Federal drainage service system. Since there is no way to determine which farmers will elect to install tile drains in the future, the collection system pipelines are designed with sufficient capacity to provide drainage service to the entire 110,000 acres of drainage-impaired farmlands that would remain in production under this alternative. The designs of downstream drainage service features (reuse, treatment, etc.), however, are based only upon providing sufficient capacity to accommodate drainwater flows from 73,000 acres of tiled farmlands across all three subareas of Westlands.

Selection of Retired Lands

There are currently 44,106 acres of drainage-impaired lands that have been retired from irrigation farming in Westlands. The In-Valley/Water Needs Land Retirement Alternative would retire an additional 139,850 acres of drainage-impaired farmlands in Westlands. Selection of these additional retired lands was based on several factors. The first criterion was to select lands having high concentrations of selenium in the shallow groundwater. Secondly, lands were selected based on minimizing costs for the collection and conveyance systems. Lastly, Reclamation collaborated with Westlands to compare their preferences for locations of retired lands. The result of this comparison yielded a difference of less than 320 acres between the Reclamation and Westlands proposals.

Existing Facilities

About 120 miles of drainage collector pipelines were constructed in a 42,000-acre area of the northeast portion of Westlands and connected to the San Luis Drain in

the 1970s. In 1985, following a Nuisance and Abatement Order issued by the SWRCB, discharges were halted and the pipelines to the San Luis Drain were plugged. Reclamation designers evaluated the potential to incorporate the existing infrastructure into the proposed facilities and determined that it would not be practical. Therefore, the existing drainage facilities are not part of the drainage service system in this alternative.

Collection System Design

Drainage collector pipelines are designed to convey drainwater from tile drain sumps across about 110,000 acres of farmlands to 11 different reuse areas within Westlands. Farmers and districts would be responsible for installing tile drains and drainage collection sumps with submersible pumps at the low point of each quarter section (160 acres) of drained farmland. There would be about 700 connections between these low points and the collector pipelines where farmers' pumps would discharge drainwater into the Federal drainage system. Designs and cost estimates are not included for the non-Federal portion of the drainage collection system (i.e., on-farm tile drains, sumps, and submersible pumps).

Although the on-farm submersible sump pumps are not part of the proposed Federal facilities, they would be controlled by operators of the Federal drainage service system using SCADA and communications equipment (described in the "Conveyance" section of this appendix). Control is necessary to ensure that drainwater inflows are scheduled to meet irrigation delivery requirements to downstream reuse facilities. Drainage collection design assumes installation of on-farm DOS-IR valves to permit temporary, shallow groundwater storage as needed to manage the flows between the farmlands and the reuse facilities. Flows into the collector pipelines will be controlled by cycling the sump pumps and adjusting the DOS-IR valves on each contributing tile drainage system. Farmers would be responsible for managing shallow groundwater storage and elevation as a function of irrigation efficiency and the DOS-IR valves, within the constraints imposed by the capacity of the drainage collection system.

Approximately 330 miles of new, buried, Federal collector pipelines would be constructed to convey the drainage received from the farmers' sumps to the nearest existing downgradient reuse area. Pipelines are designed to discharge with 1 foot of elevation head at the delivery point in the reuse area. These pipelines are designed for full pressurized flow conditions but are constructed with sufficient slope to permit gravity flow. Pipeline material would be HDPE, due to the corrosive nature of the drainwater being collected and conveyed.

Analyses of potential drainwater flow scenarios determined that the controlling maximum flow condition for any pipeline is when all contributing farmlands are simultaneously drained to meet irrigation demands of grasses in the

receiving reuse area, which yields a maximum flow rate of 0.0012 cfs per acre, or 0.87 acre-ft per acre per year.

Pipeline flow rates are determined by the sump pump discharge rate and the number of contributing sump pumps in operation. The sump pump discharge rate is directly related to the elevations of the surface water in the farmers' sumps, which are dependent on the local water table elevation. These water elevations change in response to climate conditions and irrigation practices and can vary by as much as 6 feet during the year. To evaluate the potential impact on drainage flow rates in the collector pipelines, designers selected a Goulds WE Series Model 3885 submersible pump that farmers could install to drain a 160-acre parcel of farmland. The pump curve indicates a flow variation of 30% across the range of potential sump water elevations and a maximum flow of 0.0012 cfs per acre when the water elevation in the sump is at its highest point.

Connecting several sumps to a pipeline requires sump standpipes to accommodate pressure variations resulting from cycling of sump pumps (see drawing 805-D-10448). Flow analyses determined that pressure variations will induce temporary surges in the standpipes between 5.4 and 20.1 feet above ground surface. The cost of the sump standpipes is considerably less than the cost of increasing the size of the collector pipelines for the temporary flow increases. Therefore, all of the collector pipelines were designed for a maximum flow rate of 0.0012 cfs per acre.

Head losses were computed with the Darcy-Weisbach equation, using a rugosity of 0.000005 feet. The hydraulic grade line is usually at or below the ground surface and never higher than 5 feet above the ground surface. The minimum cover over the pipe is 3 feet. The design maintains flow through a combination of ground elevation change and pressure heads. The system does not require pressure tanks.

The design quantities include pipe, excavation, backfill, compacting backfill, and road crossings. Drawing 805-D-10449 shows the profile cut for a typical road crossing, and drawing 805-D-10450 illustrates the pipe trench pay line section using vertical pay lines. The actual section requiring a trench box for constructability and safety would look similar. Trench excavations not using a trench box or shoring must be excavated in accordance with *Reclamation Safety and Health Standards*. Maintaining an open trench would be difficult in many areas. Much of the in situ soil would be unstable when water is present. Many of the soil layers are also very soft.

These conditions led to the use of a typical trench, as shown on drawing 805-D-10450. The trench would also be overexcavated to 1 foot below the pipe and then backfilled with compacted native material. The backfill would then be compacted up to 6 inches above the crown of the pipe, except for a 4-inch-thick layer of pipe bedding. The pipe bedding would be native material for pipe diameters less than

12 inches and select material for pipe diameters 12 inches and larger. The backfill would come from the material excavated from the trench. Due to the lack of groundwater mapping information, trench box excavation and associated earthwork quantities are assumed to be 20% of the total pipeline length.

Drainage Reuse Facilities

The reuse of irrigation drainwater, by growing salt-tolerant plants, provides an opportunity to consume some of the drainwater, resulting in a much reduced volume of water requiring further treatment and disposal within the downstream components of the drainage service system. Reuse areas also provide subsurface storage of drainwater to regulate and attenuate variations in reuse effluent flows to downstream drainage service components, which allows them to perform more economically. In other words, the reuse facilities provide for the control, management, and containment of the Westlands on-farm tile discharges.

Reuse Locations

Field investigations for soil suitability, in combination with collector system design layouts (to convey on-farm tile drainage water from the commercially irrigated areas), were used to determine economical reuse locations in relation to collector pipe size and gravity flow operation. Generally, surface and subsurface soils are suitable in all locations, except the most eastern parts of Westlands, where subsoil drainage is restricted by very low soil permeability. Proposed reuse locations are described in table 30. The size of each reuse area was calculated as the amount of land needed to create irrigation demand to match the drainwater inflow quantities from the contributing commercial farmlands. The calculated reuse areas have been rounded up to the nearest quarter section (160 acres). Field locations and sample layouts have been completed using the horizontal and vertical data in the National Geographic TOPO! mapping program.

Final designs for all reuse areas would need to include additional field investigation to determine more detailed soil and subsoil properties and updated expected service area inflows. Final design data would require an updated topographic site survey and refinement of each of the site-specific reuse area drainage requirements and actual crop acreage areas.

Soil Investigations of the Reuse Area

Land Productivity Potential

A modified Reclamation land classification evaluation process was used to develop productivity grades for the reuse area soils. An assignment of land grade for productivity was used to refine the estimated crop water use that could be expected on the reuse areas. The results of this soil evaluation are summarized in table 31.

Table 30. Proposed reuse areas for Westlands

Reuse Area	Size (acres)	Location
A	480	T. 21 S., R. 19 E., E ½ of Sec 19 and SW ¼ of Sec. 18
B	480	T. 20 S., R. 19 E., N ½ of Sec 33 and SE ¼ of Sec. 28
C	800	T. 20 S., R. 19 E., Sec 10 and SW ¼ of Sec. 3
D	960	T. 17 S., R. 18 E., Sec. 29, SW ¼ of Sec. 28, and NE ¼ of Sec. 30
E	320	T. 17 S., R. 17 E., E ½ of Sec. 3
F	160	T. 17 S., R. 16 E., SW ¼ of Sec. 11
G	480	T. 17 S., R. 17 E., N ½ of Sec 19, and NE ¼ of Sec. 10
H	640	T. 16 S., R. 16 E., E ½ of Sec. 16, and E ½ of Sec. 9
M	480	T. 14 S., R. 14 E., W ½ of Sec. 23, and SW ¼ of Sec. 14
N	320	T. 13 S., R. 13 E., E ½ of Sec. 25
O	320	T. 13 S., R. 14 E., SE ¼ of Sec. 35, and SW ¼ of Sec .36
Total Acres	5,440	

Table 31. Westlands reuse areas soil productivity grades

Westlands Reuse Areas	Acres					Location
	Grade 1	Grade 2	Grade 3	Grade 4	Grade 6	
A		160	320			Sec. 18, 19, T. 21 S., R. 19 E.
B			480			Sec. 28, 33, T. 20 S., R. 19 E.
C			800			Sec. 3, 10, T. 20 S., R. 19 E.
D	30	890			40	Sec. 28, 29, 30, T. 17 S., R. 18 E.
E		320				Sec. 3, 18 S., R. 17 E.
F		160				Sec. 11, T. 18 S., R. 16 E.
G			480			Sec. 19, 20, T. 17 S., R. 17 E.
H		580	60			Sec. 9, 16, T. 16 S., R. 16 E.
M		400	80			Sec. 14, 23, T. 14 S., R. 14 E.
N		320				Sec. 25, T. 13 S., R. 13 E.
O			280	40		Sec. 35, 36, T. 13 S., R. 14 E.
Totals	30	2,830	2,500	40	40	

Reuse Area Subsurface Drainage Investigations

Field data collection for subsurface drainage properties of the potential reuse areas was intended to provide onsite soils logs to at least 20 feet in depth, in-place soil permeability measurements, and estimated depth to barrier (relatively slow

permeable layer). Soil layering, permeability, and depth to barrier are critical values required to estimate tile drainage depth and spacing. Without proper drainage for both water table control and salt leaching, the reuse areas would fail and the project would not provide a long-term solution to drainage needs.

Drainwater Inflow to Reuse Areas

The discharge of the on-farm tile drains into the Federal collection system requires management and regulation to match these drainwater flows to the irrigation demands of the various reuse areas. During times of the year when crops are typically dormant, the on-farm drains would not be allowed to discharge. During this time, deep percolation added to the water table from irrigation or rainfall would have to be stored in the groundwater system as water table buildup. Tile drainage discharge can be controlled, but only to the degree that the water table does not rise into the root zone of the crops. To provide the appropriate timing of tile discharge from the on-farm tile drains, and meet the irrigation requirements of the reuse crops, additional groundwater storage (deeper drain depth) within the commercial farmlands is needed. For the tile discharge to match the reuse area crop demand, an additional 1.5 feet of drain depth beyond the normal 8-foot depth is necessary for future on-farm tile drains. Operators of the reuse facilities would manage the drainwater inflows by controlling the operation of the on-farm pumps that discharge into the Federal collection system. The design for the control of these pumps is integrated with the SCADA and communications equipment for the conveyance system and described in the "Conveyance" section of this appendix.

Annual Reuse Crop Irrigation Estimates

The basis for estimating reuse crop irrigation requirements is a general mix of crops that would be equivalent to 80% of the local reference ET. Specific crop types and particular crop rotations have not been developed, but plants that are salt and boron tolerant would be acceptable in crop rotation. The operations and management of the reuse areas will need to be flexible enough to periodically adjust the actual crop mix, rotations, and acres planted. More emphasis on perennial plants, and plants that have higher salt tolerance and greater water use rates, will make the reuse area more efficient in terms of water consumption. Examples of some crops considered are tall wheatgrass, rio wild rye, salado alfalfa, bermuda grass, barley, paspalum, red gum, and some varieties of athel. Single row or multiple row tree plantings could be used as field borders to provide deeper groundwater use through their deeper root systems.

Recent field studies on crop ET by California State University at Fresno have shown salt-tolerant crops of tall wheatgrass, creeping wild rye, and paspalum use water at rates similar to reference ET. Measurements at RRR, where these crops were irrigated with drainwater, show ET in the range of 85% to 98% of reference ET at the CIMIS 105 site near Tranquility.

The soil productivity grade was used to help determine the future reuse area irrigation requirement. The annual crop water requirements were used to arrive at an initial estimated acreage size for each reuse area. The estimated quantity of drainage produced within each reuse area is based on a 27% leaching fraction of the irrigation water applied. Table 32 summarizes the reuse areas, the potential quantity or rate of drainwater reuse, and the estimated average annual drainage rate from each reuse area.

Table 32. Estimated irrigation demands and drainage rates for Westlands reuse areas

Reuse Area	Maximum Day; Farm Delivery Requirement (using 73% irrigation efficiency) acre-inches/day	Reuse Area Average Annual Farm Delivery Requirement (acre-ft/acre)	Reuse Area Average Annual Drainage (acre-ft/acre)
Reuse A	0.31	4.00	1.08
Reuse B	0.31	4.00	1.08
Reuse C	0.31	4.00	1.08
Reuse D	0.30	4.57	1.23
Reuse E	0.31	4.57	1.23
Reuse F	0.31	4.57	1.23
Reuse G	0.31	4.00	1.08
Reuse H	0.31	4.28	1.16
Reuse M	0.31	4.28	1.16
Reuse N	0.31	4.28	1.16
Reuse O	0.31	4.00	1.08

Reuse Irrigation

Collection system pipelines are designed to discharge drainwater with 1 foot of elevation head at the delivery points within each reuse area. The collection system pipelines would be connected to gated irrigation pipe at the delivery points along the upper edge of the reuse fields. Gravity flow is assumed for application of irrigation drainwater. Quantity estimates for the reuse areas include shaping and leveling to allow gravity distribution of irrigation drainwater. Both the expected full capacity flow and the delivery elevation at each reuse area are used as the sizing criteria for the irrigation pipe. Gated pipe head losses are estimated using the nomograph from Hastings Pipe Company (www.hipco-ne.com).

Design layouts of the irrigation pipe were completed using TOPO! software. Notes are included on the TOPO! map files that describe pipe beginning and ending elevation estimates and routes and lengths of both gated and nongated pipe. In a few cases, buried HDPE/PE SDR32.5 pipe is used for distribution

within the reuse area. When buried pipelines are used, earthwork quantities are included in the cost estimates. The minimum cover over any buried pipe is assumed to be 5 feet. This could be modified in final design if equipment travel is not a concern or other criteria are established for minimum cover depths. Miscellaneous fittings, such as air vents, tees, wyes, and ells, are included within the estimate under the category "unlisted items."

The gross acreage to be served by an individual collector system outlet, and the net acres for irrigation rotation, are based on the local soil moisture holding capacity and the expected peak day water use rate. The irrigation furrow lengths are limited to a maximum of 2,640 feet. Irrigation runs of 1,320 feet are more desirable for efficiency purposes but, in some cases, the field geometry did not allow use of shorter runs. Generally, rectangular field shapes have been used for convenience.

Irrigation Tailwater

Irrigation tailwater cannot be discharged; therefore, tailwater would be recirculated onto the reuse field. The tailwater ditch design is based on the existing field topography and reuse field layout. The tailwater ditch conveys excess water to a tailwater pump, where it can be recirculated onto the reuse field. Tailwater is expected to be intermittent and infrequent but would depend on the crops in use and the irrigation and rainfall sequence.

A tailwater pump is assumed to be located next to the conveyance pump on each reuse area. The typical tailwater pump provides 2-cfs capacity with a static lift of 10 feet, a pipeline length of 7,920 feet, and a pipeline diameter of 12 inches. These wastewater pumps can satisfactorily pump small amounts of solid material, which are expected to be transported into the sumps from the field irrigation/drainage systems. It is expected that the sumps may require periodic cleaning, depending on sediment volume. The pumps were selected so they can be easily removed from the sump to provide access to the sumps for cleaning. Access to the sump pumps is through the concrete deck slab at grade. The tailwater sump design is shown in drawing 805-D-10403.

The power source for the pump motor is electricity from the local power grid. The pumped water quality is considered corrosive to metals, and adequate concrete cover would be necessary for the steel reinforcement. A cathodic protection system may be considered in final design for exposed metalwork.

No service yard is provided at the tailwater pumping plants. The tailwater pumping plants are not protected by a fence. Gravel surfacing is not provided at ground level around the plants. The electrical equipment for the tailwater pump units is typically supplied with the pumps and has been included with the pumping unit quantities. Therefore, no separate detailed electrical estimate has been provided.

Reuse Subsurface Drainage

Drainwater discharges from the Westlands reuse areas are controlled to provide a steady flow rate to downstream treatment plants. The steady rate discharges are equivalent to the average annual rates based on 73%irrigation efficiency. This is possible by providing groundwater storage under the reuse areas from which the drain discharges can be controlled. Excess drainwater is stored during the summer irrigation season and later discharged during the nonirrigation season. This groundwater storage capacity is created by placing the entire drainage system at a depth of 3 feet below "normal" drain depth. For this project, a "normal" drain depth is assumed to be 8 feet below ground surface. The drains under the Westlands reuse areas are designed to be 11 feet below ground surface. The additional costs of constructing deeper reuse area drains are expected to be easily offset by cost savings at the treatment plants. Treatment plant costs are reduced because peaking capacity is not required for the controlled steady discharges from the reuse areas.

Field data on soil layering and soil hydraulic conductivity were collected at each reuse site. Field data and drain design data, such as crop deep percolation and drain depth, were used in the Reclamation transient-state drain spacing program ADPP. The drain spacing calculation results for Reuse Area A are shown in table 33.

Table 33. Transient-state drain spacing for Reuse Area A

Permeability (ft/day)	2.590
Specific yield (%)	.100
Drain to barrier (ft)	4.100
Maximum water table above drain at midspacing (ft)	4.000
Drain Radius (ft)	.700
Depth to the Drain (ft)	8.000
Equivalent barrier (ft)	4.036
Drain spacing (ft)	250.000
Drain OFF THE BARRIER case was used	

For the reuse area drains, an 8-foot depth is used as the "normal" depth, along with the deep percolation expected from the irrigation of the reuse crop. In actuality, the drain depth would be 3 feet lower (11-foot depth) to provide adequate groundwater storage for continued steady discharge throughout the year.

The drain spacings used for quantity and cost estimates of the Westlands reuse areas are shown in table 34.

Table 34. Soil permeability, depth to barrier, and drain spacings

Reuse Area	Soil Permeability (ft/day)	Depth to Barrier, (ft)[1]	Drain Spacings (ft)
A	2.6	12.1	250
B	2.4	14.7	285
C	2.7	11.5	245
D	1.2	15.2	205
E	7.1	13.9	485
F	2.2	18.2	325
G	5.2	21.3	565
H	2.7	15	315
M	3.4	21	450
N	2.8	21.1	405
O	4	22.7	510

[1] From non-Government standards.

Spaced drain tile quantities are based on the acreage size of the reuse area and the drain spacing. Spaced drains are all 6-inches in diameter as a minimum. Standard drawing 40-D-6746 shows details of manholes and a standard tile drain pipe trench with gravel envelope.

Collector tile quantities are based on typical layouts using the length or width of each field to connect all spaced drains to the conveyance pump site. Collector lines range in size from 6 inches to 15 inches in diameter. Manholes are used on the collector line where spaced drains connect. Additionally, manholes are used about every 1,000 feet on the spaced drains. Manholes on the spaced drain are used for access to the tile drain for cleaning and monitoring.

To facilitate controlled discharge of the tile drains and prevent shallow water tables on the downslope parts of the reuse areas, water level control devices (like the DOS-IR valves) would be installed. To adequately contain and spread the water table over the entire reuse area, one valve would be placed at midpoint on each spaced drain, and one valve would be placed at each manhole location. Based on the acreage size of each reuse area and the drain spacing, the estimated quantities required are shown in table 35. This scheme for storing and managing reuse drainage is based on the experience of existing reuse operations in the project area.

The calculation of tile discharge from Reuse Area A is shown on figure 50, which shows the tile discharge gradually approaching the steady average annual rate over a period of 10 years. Controlling the discharge from reuse areas would take some startup time to store enough water for a 365-day steady discharge. The steady annual discharge would exhibit some variation due to wet years and dry years. Estimates of ET_o variations in the Westlands North, Central, and South

Table 35. Estimated quantities required of drain tile, collector lines, and manholes

Reuse Area	Feet of Spaced Drain Tile	Feet of Collector	Number of Manholes	Number of DOS-IR[1]
A	83,640	7920	93	62
B	73,370	10560	81	54
C	142,250	15840	159	106
D	204,000	21120	225	150
E	28,750	5335	33	22
F	21,450	2640	24	16
G	37,010	7920	42	28
H	88,510	10560	99	66
M	46,470	7920	51	34
N	34,420	5280	39	26
O	27,340	5280	30	20

[1] Drain or sub-irrigation riser.

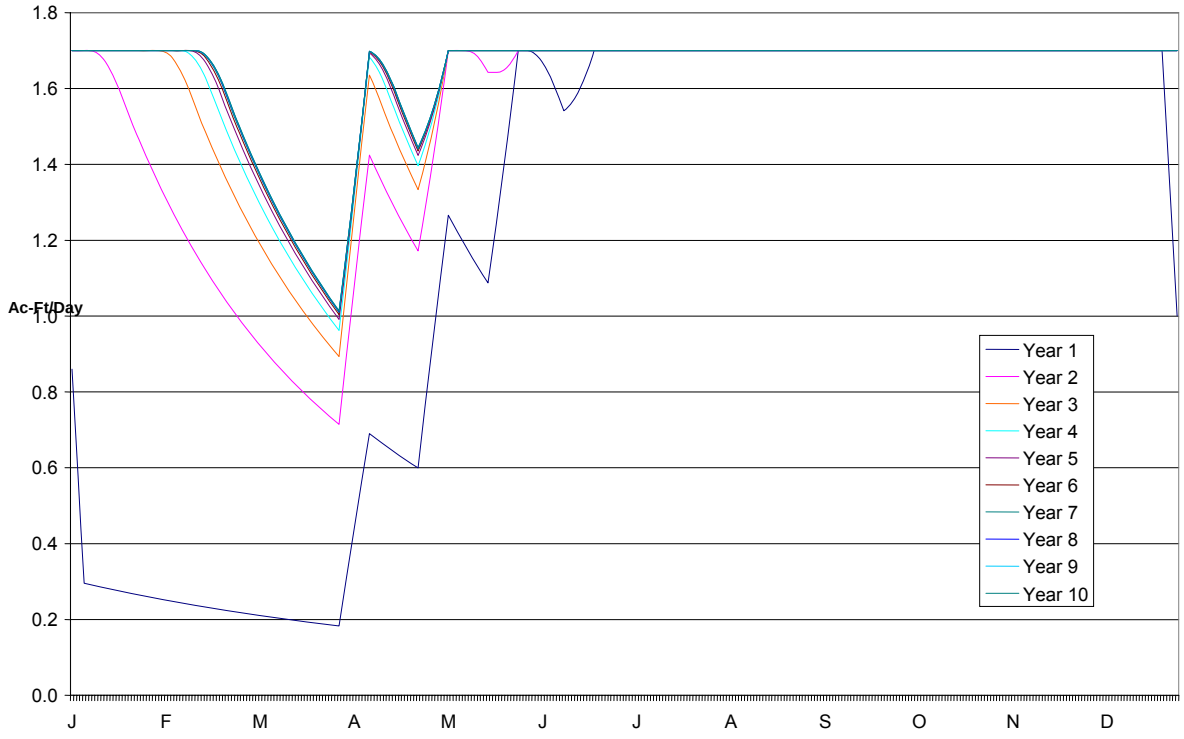

Figure 50. Estimated drainwater discharges from Reuse Area A.

areas show a variation of up to plus or minus 20% on an annual basis. This same range of variation could be expected in the drain discharges from the corresponding reuse areas.

For Reuse Area A, the beginning water table depth is the average water table depth as measured during field data collection in 2003. The annual dip in discharge during March and April is a result of depleting the groundwater storage under the area and basically running out of water. After some years of operation, more water is held in storage, and the annual drop in discharge becomes progressively less. It is assumed that the annual drainwater discharge would reach steady state; however, variations due to wet and dry years, water supply, crop types, number of irrigated acreage, and other factors would result in some annual fluctuation in discharge volume. Reuse tile discharges flow by gravity to a single sump at the low point of each reuse area. A pumping plant and pipeline convey the reused drainwater to a regional RO treatment plant in each Westlands subarea. The designs for the pumping plants and conveyance pipelines are presented in the following section.

Conveyance System

The conveyance system for Westlands consists of 11 pumping plants and conveyance pipelines located within the 3 regional Westlands subareas:

- Westlands North: three pumping plants (reuse areas M, N, O) and pipelines from each to the Westlands North RO treatment plant
- Westlands Central: five pumping plants (reuse areas D, E, F, G, H) and pipelines from each to the Westlands Central RO plant
- Westlands South: three pumping plants (reuse areas A, B, C) and pipelines from each to the Westlands South RO plant

Westlands Reuse Drainage Pumping Plants Design Summary

Each of the pumping plants consists of a single pumping unit capable of supplying the maximum capacity flow required for the associated reuse area, including a 5% margin for wear.

Pump and Unit Piping Selection

Reclamation materials engineers evaluated current and projected drainwater quality reports and prepared a list of recommended pump materials (the least expensive being stainless steel), as well as a recommendation not to use graphite impregnated packing. Based on the evaluation, enamel-coated, cast iron bowls with stainless steel impellers were selected. During final design, less expensive pump materials would be evaluated for use on this project.

Barrel-type pumping unit systems were selected for the Westlands conveyance systems because reuse area drainwater is expected to be clean and free of sediment, and the pumping rate would be approximately constant once the reuse areas reach a steady state. A barrel-type pumping unit system uses a steel can as the wet sump into which a single vertical turbine type pump is installed. A vertical induction motor would be mounted above ground on each pump discharge head. The can or barrel pump design assumes there is a constant and steady inflow from the reuse area which matches the pumped flow requirements. This barrel or can pump design does not provide for any sump storage of water to accommodate reduced inflow conditions. During final design, if it is determined that reduced inflows from the reuse area do exist and are required to be pumped, construction of a larger sump would be recommended.

If a larger sump is used, preliminary estimates show that a 24-inch-diameter by 20-foot-long concrete pipe mounted vertically in the ground could be used as a standard sump for the Westlands pumping plants. The volume associated with an 8-foot water level change in the 24-inch-diameter sump size, while pumping at the maximum capacity of the largest Westlands pump required, would ensure the pump motors (7.5 horsepower to 50 horsepower) would always be energized for more than the required 5 minutes to attain a steady-state operating temperature. This would prevent premature winding insulation damage and shortened motor life due to overheating of the motor windings caused by short run times and multiple starts. An additional benefit of using the 24-inch-diameter sump is that if any sediment is present in the reuse area drainage water, a larger amount of sediment could be allowed to collect in the bottom of the 24-inch sump than in the can pump without affecting the pump performance.

The proposed implementation schedules for Westlands collection areas (North, Central, and South) establish the required range of flows needed for each of the pumps, as well as the number of replacement pumping units needed to meet the changing flow requirements. Alternatives to changing pumps out as the flow increases are to utilize variable-speed drives, throttle the flow from each pump, or bypass the pump discharge back to the individual sumps. An economic analysis was done to identify the best alternative for each pumping plant. Based on a preliminary power cost of $35 per megawatt-hour VFDs were selected for two pumps (A and H) and throttling was selected for the remaining nine pumps. While throttling of the pumped flow on the nine pumps would result in higher energy costs than would occur if variable-speed drives were used, the increased costs would only occur until the build-out period of each pumping plant is completed (i.e., maximum flow is required from each pumping plant). The duration that the pumps are throttled and the energy required to throttle at the low flows result in less cost to throttle the flow than would be saved by using VFDs or replacing pumps.

As stated above, the use of VFDs would provide reduced flows at lower energy costs than could be achieved by throttling the flow. However, an additional initial

capital cost outlay for the VFD equipment is necessary, and the equipment would become obsolete at the end of the build-out period, assuming the pumping unit would be operating at maximum capacity with a constant flow rate at the end of the build-out period. An additional benefit of procuring the VFDs is that if reduced flows from the reuse areas are experienced, this equipment could still be used to maintain the required flows needed at the water treatment plants. This analysis should be repeated in final design.

The unit piping and manifold piping for each of the pumping units are steel and are sized for a maximum velocity of 10 feet per second to minimize friction losses. Slanting disc check valves were selected for each pumping unit, although the final design would use a combination pressure sustaining and check valve instead of the slanting disc check valve for all throttled units. For the unit piping selected for Westlands, the cost of the slanting disc check valve is comparable to the combination pressure-sustaining and check valve. Some pumping units require a separate filling line to ensure adequate water and pressure prior to restarting a pump. After the filling line is full, pumping will occur through the unit discharge line. A check valve is also installed on the filling line to maintain water in the line when the pump is turned off.

The air chambers would be designed and constructed in accordance with ASME Boiler and Pressure Vessel Code. Typical spare pump parts, such as pump bearings, lineshaft bearings, motor bearings, wear rings, gaskets, and seals, would be provided to expedite pump repairs, should the need arise.

Structural and Architectural Design

The Westlands pumping plants have a single pump, and the pump column and bell are housed in a steel canister (barrel) sump below a concrete slab on grade. The power source to the plant sites is electricity from the local power grid. Motor voltage power would be provided with pole-mounted transformers for the single-unit plants (see drawing 805-D-10401).

The pumping plant sites are located at the low point of each reuse facility and lift water to the designated RO treatment facility. Filtered subsurface drainage water is supplied to the pumping plant sump by gravity from the reuse drainage collection system. Consequently, trash, aquatic growth, and silt accumulation do not influence the pumping operations. The pumped water quality is considered corrosive to metals, and adequate concrete cover would be necessary for steel reinforcement. A cathodic protection system may be considered in final design.

The service yard is sized to accommodate the pumping plant, an air chamber (when required), and vehicle access for O&M. The yard is delineated and protected by a 7-foot-high fence with a 20-foot-wide double gate entry. The service yard is surfaced with a 6-inch depth of gravel. The soil at the pumping plant sites provides little support when saturated and may require further remediation to accommodate wheel loads in subsequent designs.

Service yard drainage would be provided by sloping the finished yard away from the pumping plant or other features located within the service yard. The finished yard surface would match the existing ground elevation along the perimeter of the service yard.

A reinforced concrete masonry unit wall is provided on the plant motor deck as a noise and visual barrier and bullet protection to the equipment. The plant equipment is self-contained for dust and moisture protection and cooling (when required). The plant deck slab is sized to accommodate the mechanical and electrical equipment and is spaced to provide operating and safety clearances. The dimensions for equipment used in the depicted layouts are estimated (see drawing 805-D-10402).

The plants are outdoor type, and the slab-on-grade deck, discharge pipe encasement, and the sump canister base are cast-in-place reinforced concrete. A sunshade with a removable roof section is required to limit the heat exposure to the plant motor deck. These plants are unmanned and are remotely controlled; therefore, the plants have no toilet or office areas, nor do they have a tool area for maintenance and repair. Cranes and other lifting devices are not installed at the pumping plants. All equipment handling would be provided by means of a mobile crane or portable hoisting equipment. Operation of the pump delivery system may raise the groundwater at the pumping plant sites because of reuse area irrigation and irrigation drainage. The designs for the structural foundations would account for this anticipated rise in the groundwater elevation.

Foundation Conditions

The use of native materials as compacted structural backfill is not uncommon in this area. Only the few areas of high plastic index soils would exclude the native soils from being utilized as backfill material. Even so, lean to sandy-lean clay material of acceptable plastic index would be available from wasted soils at adjacent excavations given the size and scope of this project. It is appropriate for feasibility level design that native soils be used as structural backfill for the proposed pumping plant structures (and water treatment facilities). It is anticipated that soils may require moisture content conditioning prior to placement to meet Reclamation's structural backfill compaction requirements.

The issue of differential settlement or expansive soils is of concern to all structures of this project. It is not practical to assume that structural foundation treatments alone will adequately address the issue. Even with overexcavation and replacement of foundation materials, differential movements can be expected. The region, as a whole, is prone to differential ground movement. Smaller structures should be designed to provide their own internal stiffness and anticipate differential movements of the foundation. The larger structures are designed to be founded on deep pile foundations; however, some differential foundation movement should be assumed.

Structures should be designed with the assumption of floating foundations and should account for differential movement by liberal use of overexcavation, compaction, and limited slip-pipe couplings that allow for movement or rotation between points of connection. Removal and replacement of excavated foundation material will not solely solve the issue of differential settlement or expansive soils. In general, the pumping plant structures will be lighter then the material removed. Preconsolidating the base soils may not be required. Preconsolidation may produce rebound that could be detrimental to the structure.

Foundation designs and the use of excavated soils for structural backfill should be reviewed as more site-specific subsurface geologic data are collected during final design. Foundation pretreatment assumptions should be reviewed in the final design effort. The current assumed 2:1 excavation cut slopes are appropriate for feasibility level design but should also be reviewed at final design. Braced excavation is used for the buried sump canister and is likely for the intake pipeline within the plant service yard. Open area excavations have 2:1 cut slopes (horizontal:vertical). The foundation backfill compaction improves the soil bearing capacity, reduces vibration-induced settlement, and reduces the potential for consolidation during seismic events.

Construction Considerations

Excavation for the pumping plant sump and the intake pipeline would require dewatering and unwatering during construction. This would ensure adequate soil compaction and provide some consolidation of the surrounding in situ soil. The groundwater is approximately 13 feet below the existing ground surface at all the pumping plant sites. For the purposes of this estimate, collection ditches have been assumed dry during construction. If water is encountered during construction, then concrete placement under water or precast concrete sumps may be an option for final designs.

All common excavations below groundwater will be difficult due to the general soil conditions of the area. The feasibility level costs were conservatively estimated to reflect this difficulty and the uncertainty of not knowing the soil properties at the precise excavation locations. Although not shown on the design drawings, cost estimates assume placement of a “French Drain” system of slotted pipe and 12-inch layer of gravel across the base of all excavations below the groundwater table for structures such as pumping plants. At best, the low-density, saturated, lean to fat clays will be a muddy mess. These construction difficulties would be exacerbated during the winter rainy season; construction schedules should take this into account. The placement of firm, free-draining gravel will facilitate placement of concrete slabs, as well as facilitate the removal of surface water during the construction effort.

Electrical Power Supply and Equipment

The electrical equipment at each of the 11 Westlands pumping plants would be similar, and two typical layouts of electrical equipment would be used for the feasibility design.

Control Equipment

A 600-volt control board or MCC for both pumping plants A and H would be used for starting the well pump motors. The MCC would contain the standard equipment, including combination motor starters, control power transformers, selector switches, pushbuttons, and all unit protective and control devices. At plants A and H, a VFD would be provided to operate the variable speed pumping unit. (See drawing 805-D-10432 for MCC schematic design.) The other pumping plants (plants B through G and plants M, N, and O) use a control board for operating a fixed-speed pumping unit.

The control equipment (control board or MCC) would also have motor starters and control equipment for air chamber equipment which is required at several of the pump station locations. Adjacent to the control board is a SCADA cabinet, which would provide start/stop signals for the pumping units. The SCADA system provides automatic operation of the pumping units based on flow requirements and system conditions.

A typical electrical schematic control diagram for both the fixed speed and variable speed units is shown on drawing 805-D-10424. The electrical power distribution diagram for the various North, South, and Central pumping plants are shown on single-line drawings 805-D-10420 through 805-D-10423.

Main Pumping Unit Motors

The motors for driving the vertical turbine pumping units would be of the vertical-shaft induction type with TEFC enclosure. For each collection well, one 480-volt motor would be provided. The horsepower of each motor would vary from 7-1/2 horsepower to 50 horsepower based on specific pump requirements at each pumping plant site.

All motors would have similar control and protective devices supplied to provide for alarm and shutdown of the units for problem conditions. Shutdown of the respective pumping unit would also occur for low water level condition.

Incoming Power and Power Distribution Equipment

The local electrical utility would bring in the power lines to each plant. Transmission lines bringing power to the pumping plants are described in attachment 3 of this appendix. Transmission lines would transfer power to a power pole with a fused disconnect and arrester mounted on the power pole. From there, either a pole mounted transformer or pad type transformer would be connected.

The power requirements were determined by total pump sizes and plant load requirements. Plant loads are estimated considering a maximum load of everything powered on. Power requirements and plant load factors should be re-evaluated during final design.

Assumptions:

- The utility would provide all power needed at the voltage of 12.47 kVs, effectively grounded for each plant.
- The power company would install any revenue metering required for power consumption billing purposes.
- The Government would provide poles, fused disconnect and arresters, and a transformer for each plant.
- The 700+ individual pumps for the farmers are to be the responsibility of each farmer and are not part of these estimates or the responsibility of the Government. The estimated power usage for the 700+ pumps would come in around 1,200 kilowatthours total, and if run 24 hours per day, 7 days per week, power consumption would be around 10,600,000 kilowatthours per year.

Incoming power to each well would be 480 volts, three phase. The 480-volt incoming power would be brought into a meter base and service disconnect switch, and then would continue on to a 480-volt distribution panel board or MCC, which would service plant loads. A combination transformer and load center would be provided to service 240/120-volt power to service lighting, receptacles, and other low-voltage plant loads.

Communications

General Designs

Fiber optic and wireless networks would be used to establish communications between the control centers (located at the RO plant) and the biotreatment plant, reuse pumping plants, and farm sumps for each of the Westlands regional subareas.

Fiber Optic Networks

Each fiber optic network would be comprised of 12 and 24 fiber, single mode fiber optic cables. The use of single mode fiber optic cable guarantees that communications via fiber between sites can be accomplished without repeaters for distances up to 50 miles. The fiber optic cable would be installed in HDPE conduit that is installed when collection, distribution, and conveyance pipe is being installed. The fiber optic cable would be pulled into the conduit after

installation of the pipe and construction of the various features (RO, biotreatment, pumping plants, etc.). Pull boxes would be installed at designated intervals to assist pulling cables through the conduit.

The fiber optic cable of choice is a double jacketed all-dielectric cable manufactured by Corning. The all-dielectric cable is immune to induced voltage and can be installed parallel to power cable and near power equipment if necessary.

Network switches with integral media converters would be used to transmit data among the various fibered sites. This network can be used for other communication needs if desired. Voice-over-data communications (telephone) and full frame video (security) are available using existing hardware from several manufacturers if required.

Wireless Networks

Each wireless network would be comprised of wireless bridge/routers and/or spread spectrum radios. The configuration of the collection and conveyance system determined the type and location of wireless communication. All wireless networks used in this design are license free.

The bridge/routers would be used at RO treatment plants to communicate with reuse area pumping plants in Westlands. The bridge/routers have greater transmission rates than spread spectrum radios, and this capability is needed to distribute farm wells operating data to reuse area pumping plants.

Spread spectrum radios have been selected to create the various radio networks throughout Westlands. Spread spectrum radios operate in two frequency bands: 900 megahertz and 2.4 gigahertz. Respectively, the frequency bands offer 50 to 400 channels (noninterfering frequencies), 240 user selectable radio addresses, 30 to 100 user selectable hop patterns, and radio ranges up to 20 miles. By design with noninterfering frequencies, selectable radio addresses, and selectable hop patterns, spread spectrum radios provide secure and reliable communications and provide the ability to create subnetworks when the terrain provides radio dark spots.

Westlands North Design

Approximately 6,000 feet of fiber optic cable would be used to connect the RO and biotreatment plants and pumping plant M (WX014V). Bridge/router networks would be used to connect the fiber optic network to reuse area pumping plants N (WAA25T) and O (WBB36V). A bridge/router network would not be required for pumping plant M because it is adjacent to, and connects directly with, the treatment plants. Spread spectrum radio networks would be used to connect the reuse area pumping plants to 177 farm wells.

The Westlands North bridge/router networks are defined as follows:

- WNBR-NET1 connects the fiber network to reuse area N pumping plant WAA25T.

- WNBR-NET2 connects the fiber network to reuse area O pumping plant WBB36V.

The Westlands North spread spectrum radio networks are defined as follows:

- WNR-NET1 connects pumping plant WX014V to 59 farm wells.

- WNR-NET2 connects pumping plant WAA25T to 25 farm wells.

- WNR-NET3 connects pumping plant WBB36V to 33 farm wells.

Westlands Central Design
Approximately 13,000 feet of fiber optic cable would be used to connect the RO and biotreatment facilities. Bridge/router networks would be used to connect the fiber optic network to reuse area pumping plants D (SO029A), E (WJ003T), F (WIO11V), and H (WR009T). Spread spectrum radio networks would be used to connect the reuse area pumping plants to 355 farm wells.

The Westlands Central bridge/router networks are defined as follows:

- WCBR-NET1 connects the fiber network to reuse area D pumping plant SO029A.

- WCBR-NET2 connects the fiber network to reuse area E pumping plant WJ003T.

- WCBR-NET3 connects the fiber network to reuse area F pumping plant WIO11V.

- WCBR-NET4 connects the fiber network to reuse area H pumping plant WR009T.

The Westlands Central spread spectrum radio networks are defined as follows:

- WCR-NET1 connects pumping plant SO029A to 135 farm wells.

- WCR-NET2 connects pumping plant WJ003T to 68 farm wells, 3 double wells in reuse areas E and F.

- WCR-NET3 connects pumping plant WIO11V to 55 farm wells, 1 double well.

- WCR-NET4 connects pumping plant WR009T to 93 farm wells.

Double wells are two wells that are close enough to each other that they are able to share a single spectrum radio transmitter.

Westlands South Design
Approximately 6,000 feet of fiber optic cable would be used to connect the RO and biotreatment facilities. Bridge/router networks would be used to connect the fiber optic network to reuse area pumping plants SD019C, SF033D, and SF014A. Spread spectrum radio networks would be used to connect the reuse area pumping plants to 223 farm wells.

The Westlands South bridge/router networks are defined as follows:

- WSBR-NET1 connects the fiber network to reuse area A pumping plant SD019C.
- WSBR-NET2 connects the fiber network to reuse area B pumping plant SF033D.
- WSBR-NET3 connects the fiber network to reuse area C pumping plant SF014A.

The Westlands South spread spectrum radio networks are defined as follows:

- WSR-NET1 connects pumping plant SD019C to 42 farm wells, two double wells.
- WSR-NET2 connects pumping plant SF033D to 65 farm wells, four double wells.
- WSR-NET3 connects pumping plant SF014A to 97 farm wells, 13 double wells.

SCADA Systems

A key feature of the SCADA system design is to pursue an integrated homogenous control system for the entire project. It is believed that the integrated homogenous control system would reduce hardware and software conflicts, reduce integration costs, reduce operations and maintenance costs, reduce training costs, and reduce spare parts inventories. An integrated homogenous control system implies that the same hardware, software, and instrumentation selected to control RO treatment would be used at biotreatment, reuse area pumping plants, and farm pumping plants, etc., whenever possible. Preparation of a detailed logic control manual would be required in final design.

Each of the three regional RO treatment plants in Westlands is viewed as the pivotal location in the collection-treatment process and is, therefore, recommended as the location of the SCADA master station. Control origination

from the RO treatment facility should allow the farm wells and reuse area pumping plants to follow or track RO treatment.

A Rockwell (Allen-Bradley)–Geomation solution has been selected that would use Allen-Bradley PLC at all treatment plants and pumping plants, and Geomation RTUs at all farm wells. Both the Allen–Bradley PLCs and Geomation RTUs can be controlled by Rockwell's RSView software. RSView software has been selected because of ease of programming, scalability, flexibility, and excellent training and support.

The Allen-Bradley PLC line was selected because of the RSView Software, the number of different configurations of PLCs, compatibility with Allen-Bradley variable speed drives, and the available Allen-Bradley wiring and terminal block systems. The wiring and terminal block systems reduce wiring errors and conductor tagging.

The Geomation RTU was selected because of its compatibility with the Rockwell Software, operating temperature range (-40 to 70 °C; -40 to 158 °F), compact size, modular input/output modules, and remote input/output capability). The temperature range is of great importance because of the farm field environment the RTUs would be placed in, and the remote input/output capability because it allows one RTU to control two wells at double well sites.

Flowmeters

Each of the pumping plants would have a magnetic flowmeter in the outflow pumping line to measure the flow of drainwater conveyed to the regulating tanks. The magnetic flowmeters were selected as a low-cost alternative of acceptable accuracy for measuring water. The flowmeter shall indicate, total, and transmit flow in full pipe. The flowmeter requirements are based on the design flows through the diameter of the pipeline. The flowmeter for each would be microprocessor based.

Each flowmeter would be designed with 150-pound flanges. Each flowmeter would have a remote mounted flowmeter transmitter furnished in a NEMA 4X enclosure box. The transmitter would simultaneously display flow rate (cfs), the quantity of water in acre-feet, and indicate instantaneous flow rate in gpm. Each flowmeter would have 10 diameters of pipe before the flowmeter and 5 diameters after the flowmeter. Each flowmeter measures within plus or minus 0.5% of actual for flows, where the flow velocity is above 1.0 foot per second. Each flowmeter lining would be polyurethane. Each flowmeter would be suitable for operation at temperature from -20 ºF to 140º F. The analog outputs are isolated type output signals. Provide 4- to 20-milliampere output signals for flow rates to be linear to their respective flows. Each flowmeter would be suitable for operation with 120-volt, single-phase, 60-hertz power. No ventilation would be supplied in the flowmeter vault.

A drainage sump pump unit would be supplied in each flowmeter vault and would have a minimum capacity of 10 gpm at 15 feet of head, a threaded discharge connection, a cast iron body with corrosion resistant components, and would be designed for submersible operation without an internal check valve.

Pipelines and Regulating Tanks

Pipelines convey reuse drainwater from each of the 11 Westlands reuse sumps to the 3 regional flow regulating tanks. Pipelines are HDPE, and their construction is the same as described for pipelines in the "Collection System" section of this appendix.

The Westlands pipeline regulating tanks have a precast concrete pile foundation with a reinforced concrete pile cap. The pile cap extends 1 foot beyond the inside diameter of the regulating tank to facilitate anchorage connections (see drawings 805-D-10412 and 10413).

The regulating tank sites are located near the treatment plants. The tank foundation style is modeled after the design submitted by Zenon Environmental, Inc., for the biotreatment plant foundations. The soil in the area would provide weak support and is susceptible to consolidation. The friction type piles would provide a feasible foundation support for these conditions.

The regulating tank service yard is sized to accommodate the tank, the tank foundation, associated equipment, and vehicle access for O&M. The yard is delineated and protected by a 7-foot-high fence with a 20-foot-wide, double gate entry. The service yard is surfaced with a 6-inch depth of gravel. The soil at the pumping plant sites provides little support when saturated and may require further remediation to accommodate wheel loads in subsequent designs. The regulating tank overflow piping would be routed to a reuse area for disposal.

The diameter of each of the regulating tanks was determined by the maximum flow rate of the largest pump supplying water to the regulating tank and the minimum allowable motor run time for the respective pump motor. This would provide optimum life for the motor windings by preventing overheating and premature failure of the winding insulation from inadequate cool-down periods occurring from frequent starting and stopping of the units. The height of the tanks includes volume to maintain a minimum water surface, volume for overflow, intervals between individual pumps turning on and off, and approximately a 6-foot operating range for the pumps. Tank operation would be monitored by the SCADA system using level and flow sensors. Data collected would be used to regulate the pumps that discharge into the tank. The regulating tanks would be designed and constructed in accordance with American Water Works Association D-100.

Reverse Osmosis Treatment Plants

Designs and cost estimates are presented for each of the three proposed Westlands regional RO treatment plants. The cost estimates developed from the designs do not meet Reclamation's standards for feasibility level and are, thus, considered appraisal-level designs and cost estimates. RO treatment is considered to be an established and proven technology; however, additional pilot studies will be needed during final design to optimize construction and operational details. Consequently, the cost estimates developed from these designs include higher than normal contingency allowances to address the uncertainties associated with the appraisal-level costs and future piloting.

The Westlands RO treatment systems are similar to the Northerly Area RO plant designs. The pretreatment is also similar, except that because the total quantity of solids is expected to be very small, the pretreatment trains in the Westlands plants contain no sedimentation tanks.

Expected Feedwater Quality

The feedwater for the RO treatment plants will be collected in agricultural tile drains, delivered to sumps, and pumped to a feedwater regulating tank located near each plant, where it will have from 40 minutes to several hours residence time. The amount of particulates and colloids in the collected drainwater are dependent upon the construction and operation of the tile drainage system in the reuse facilities. The RO pilot tests conducted at RRR and Panoche indicate that widely different results can occur and impact the type of pretreatment required.

Considerable uncertainty exists with respect to the composition of the feed waters, particularly to the change of composition that would be produced by percolation of the drainwater through the soils of the reuse facilities. The equilibrium chemistry of reuse irrigation, soil infiltration, and the subsequent quality collected drainwater was evaluated using chemical equilibrium software. The parameters that most significantly affect performance of the RO plants are the percent saturation of sparingly soluble salts such as calcium sulfate and calcium carbonate. Based on the results of the chemistry evaluation, it appears reasonable to conservatively assume that drainage effluent from the agricultural reuse areas would be saturated with respect to these two compounds, which eliminates them as variables when considering a wide variety of possible input compositions.

Major composition parameters including TDS of the feed and the reject streams for each regional RO plant are given in table 36.

Reverse Osmosis Skids

Based on RO pilot tests conducted in the project, the design recovery used for these plants is 50%. Recovery is limited by the probability of formation of scale from several sparingly soluble salts, primarily calcium sulfate and calcium

Table 36. Composition of feed and reject streams

Parameter	Units	North Westlands	Central Westlands	South Westlands
Feed Composition				
TDS	mg/L	14,595	11,383	13,943
Sodium	mg/L	5,750	4,375	5,405
Chloride	mg/L	3,386	2,627	3,212
Sulfate	mg/L	4,853	3,865	4,620
Reject Composition				
TDS	mg/L	29,161	22,719	27,680
Sodium	mg/L	11,346	8,633	10,665
Chloride	mg/L	6,671	5,176	6,329
Sulfate	mg/L	9,669	7,701	9,205

carbonate, either in the membrane elements or later in the selenium treatment plant. It appears possible that a higher recovery could be obtained by use of advanced precipitation inhibiters, but until these have been demonstrated, the more conservative value is used. Projections of the compositions of RO feedwater, concentrate, and product water streams are presented in table 37.

Table 37. Projections of RO feedwater, concentrate, and product water streams

North Westlands				
		Feed Flow	Reject Flow	Recovery
	cfs	1.27	0.63	0.50
	acre-ft/yr †	918	459	
	mgd	0.82	0.41	
Analyte	Units	Feed Concentration ‡	Rejection (%)	Reject Concentration
Conductance	µS/cm	17,908		32,468
Major Components				
Bicarbonate	mg/L	161	96.7%	314.16
Bromide	mg/L	*4*	*98.0%*	7.88
Calcium	mg/L	113	99.0%	224.31
Carbonate	mg/L	*0*	98.0%	0.00
Chloride	mg/L	3,386	98.0%	6,671.43
Magnesium	mg/L	309	99.5%	615.69
Nitrate as N	mg/L	179	88.5%	328.80
Potassium	mg/L	23.7	*98.2%*	46.77
Silica	mg/L	6.7	*97.0%*	13.10
Sodium	mg/L	5,750	98.2%	11,346.13
Sulfate	mg/L	4,853	*99.5%*	9,669.69
pH		7.4		7.55

Table 37. Projections of RO feedwater, concentrate, and product water streams (continued)

North Westlands (continued)

Analyte	Units	Feed Concentration ‡	Rejection %	Reject Concentration
Minor Components				
Ammonia	µg/L	3,400	95.0%	6,551.22
Aluminum	µg/L	0	95.0%	0.00
Arsenic	µg/L	8	98.0%	15.76
Boron	µg/L	33,000	90.0%	61,285.71
Cadmium	µg/L	3	99.5%	5.98
Chromium	µg/L	84	98.0%	165.50
Copper	µg/L	26	98.0%	51.23
Fluoride	µg/L	900	98.0%	1,773.27
Iron	µg/L	391	99.0%	776.16
Lead	µg/L	3	99.0%	5.96
Manganese	µg/L	26	99.0%	51.61
Mercury	µg/L	0.3	98.0%	0.59
Molybdenum	µg/L	150	98.0%	295.54
Nickel	µg/L	52	99.0%	103.22
Selenium	µg/L	330	99.5%	657.53
Silver	µg/L	3	98.0%	5.91
Strontium	µg/L	4,300	98.0%	8,472.28
Zinc	µg/L	26	98.0%	51.23
TDS	mg/L	14,595		
Sum of ions	mg/L	14,828		29,318

Central Westlands

		Feed Flow	Reject Flow	Recovery
	cfs	3.76	1.88	0.50
	acre-ft/yr †	2,724	1362	
	mgd	2.43	1.22	

Analyte	Units	Feed Concentration ‡	Rejection %	Reject Concentration
Conductance	µS/cm	13,964		25,318
Major Components				
Bicarbonate	mg/L	146	96.7%	284.89
Bromide	mg/L	3	98.0%	5.91
Calcium	mg/L	118	99.0%	234.24
Carbonate	mg/L	0	98.0%	0.00
Chloride	mg/L	2,627	98.0%	5,175.97
Magnesium	mg/L	232	99.5%	462.26
Nitrate as N	mg/L	138	88.5%	253.49
Potassium	mg/L	20.2	98.2%	39.86
Silica	mg/L	6.8	97.0%	13.30
Sodium	mg/L	4,375	98.2%	8,632.93

Table 37. Projections of RO feedwater, concentrate, and product water streams (continued)

Central Westlands (continued)				
Analyte	Units	Feed Concentration ‡	Rejection %	Reject Concentration
Sulfate	mg/L	3,865	99.5%	7,701.08
pH		7.6		7.75
Minor Components				
Ammonia	µg/L	3,400	95.0%	6,551.22
Aluminum	µg/L	0	95.0%	0.00
Arsenic	µg/L	5	98.0%	9.85
Boron	µg/L	22,000	90.0%	40,857.14
Cadmium	µg/L	2	99.5%	3.99
Chromium	µg/L	58	98.0%	114.28
Copper	µg/L	18	98.0%	35.47
Fluoride	µg/L	900	98.0%	1,773.27
Iron	µg/L	270	99.0%	535.97
Lead	µg/L	2	99.0%	3.97
Manganese	µg/L	18	99.0%	35.73
Mercury	µg/L	0.2	98.0%	0.39
Molybdenum	µg/L	335	98.0%	660.05
Nickel	µg/L	36	99.0%	71.46
Selenium	µg/L	200	99.5%	398.50
Silver	µg/L	2	98.0%	3.94
Strontium	µg/L	3,600	98.0%	7,093.07
Zinc	µg/L	18	98.0%	35.47
TDS	mg/L	11,383		
TDS sum of ions		11,562		22,862

South Westlands				
		Feed Flow	Reject Flow	Recovery
	cfs	2.39	1.19	0.50
	Acre-ft/yr †	1,728	864	
	mgd	1.54	0.77	
Analyte	Units	Feed Concentration ‡	Rejection %	Reject Concentration
Conductance	µS/cm	17,071	97.7%	30,950
Major Components				
Bicarbonate	mg/L	275	96.7%	536.61
Bromide	mg/L	4	98.0%	7.88
Calcium	mg/L	113	99.0%	224.31
Carbonate	mg/L	0	98.0%	0.00
Chloride	mg/L	3,212	98.0%	6,328.59
Magnesium	mg/L	294	99.5%	585.80
Nitrate as N	mg/L	169	88.5%	310.43
Potassium	mg/L	23.6	98.2%	46.57
Silica	mg/L	6.7	97.0%	13.10

Table 37. Projections of RO feedwater, concentrate, and product water streams (continued)

South Westlands (continued)				
Analyte	Units	Feed Concentration ‡	Rejection %	Reject Concentration
Sodium	mg/L	5,405	98.2%	10,665.37
Sulfate	mg/L	4,620	*99.5%*	9,205.44
pH		7.5		7.65
Minor Components				
Ammonia	µg/L	3,400	*95.0%*	6,551.22
Aluminum	µg/L	*0*	*95.0%*	0.00
Arsenic	µg/L	*8*	*98.0%*	15.76
Boron	µg/L	4,500	*90.0%*	8,357.14
Cadmium	µg/L	*3*	*99.5%*	5.98
Chromium	µg/L	*89*	*98.0%*	175.36
Copper	µg/L	*28*	*98.0%*	55.17
Fluoride	µg/L	900	*98.0%*	1,773.27
Iron	µg/L	*416*	*99.0%*	825.79
Lead	µg/L	*3*	*99.0%*	5.96
Manganese	µg/L	*28*	*99.0%*	55.58
Mercury	µg/L	*0.3*	*98.0%*	0.59
Molybdenum	µg/L	*343*	*98.0%*	675.81
Nickel	µg/L	*55*	*99.0%*	109.18
Selenium	µg/L	100	*99.5%*	199.25
Silver	µg/L	*3*	*98.0%*	5.91
Strontium	µg/L	3,300	*98.0%*	6,501.98
Zinc	µg/L	*28*	*98.0%*	55.17
TDS	mg/L	13,943		
TDS sum of ions		14,135		27,948

Notes:

Concentrations in green romans are from J. Yahnke memo, 2/23/06

‡ Concentrations in orange *italics* are from SLDFR Draft EIS, Appendix C, Table C2-9

† Flows are from R. Burnett memo Drain Water Reuse Outflow November 2, 2005. These numbers are based on the year 2002. Other years may be different. In particular, years 2003 and 2004 are considered "wet" years and total annual flows are higher.

Rejections in black romans were determined from RO test at Panoche, Phase I.

Rejections in blue *italics* were estimated.

The rejection for boron specified in this table, while low compared to that of other species, is high compared to the typical performance of an RO membrane. This rejection is significantly affected by solution pH, operating pressure, temperature, and membrane type. Since this table provides the composition of the reject stream, it seemed most appropriate to use a value that would give the highest likely concentration of boron in the reject.

RO feedwater temperature was calculated by fitting an assumed sinusoidal curve to data taken during testing of the RO and biotreatment pilot systems. This curve is shown in figure 51. The average temperature is 19 °C, with a seasonal swing of ± 6 °C (66.2 °F ± 10.8 °F). The average occurs at approximately the ends of April and October. The average absolute deviation in temperature of all data points on figure 51 from the correlation line is 1.95 °C.

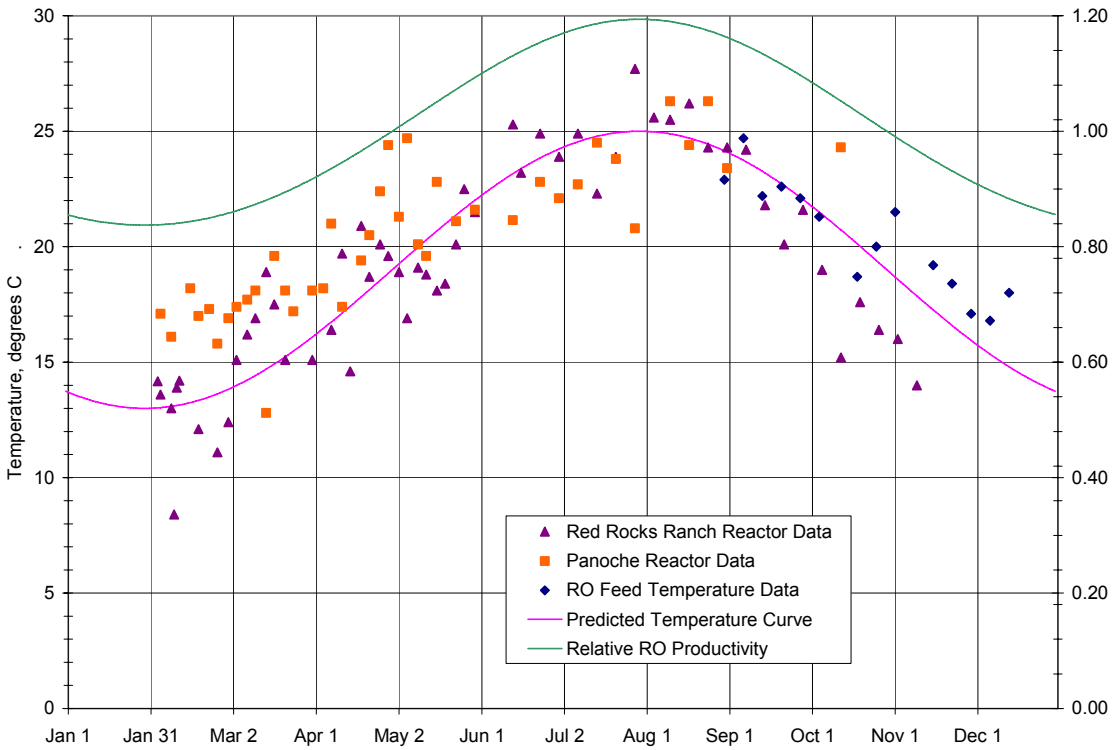

Figure 51. Expected RO feedwater temperature and relative productivity. (All temperatures left scale, relative performance right scale).

Temperature affects productivity. The effect of this seasonal variation on the productivity of the plants is shown by the green line, being an increase of 20% at the end of July and a decrease of 15% at the end of January. The units are assumed to have an operating fraction of 95%.

Other assumptions used in the calculation of plant performance were 4-year average life of membrane elements, 5-psi product pressure to provide NPSH for pumps to convey the product water to wherever it would be taken.

Based on the required treatment capacity, the plant would be based on the use of elements 8 inches in diameter and 40 inches long. With a recovery of 50%, the plants would be designed to desalt in a single stage. The stage would consist of RO racks arranged in parallel. Each rack would be 22 feet long and contain 14 pressure vessels. Each pressure vessel would house six RO membrane elements fed in series.

The only chemical addition is antiscalant, assumed to be at a concentration of 6 mg/L, based on pilot studies. Given the chemical composition of the feedwater, the principal scalant of concern is calcium sulfate. There is anecdotal evidence that particles of highly insoluble compounds, such as calcium carbonate

and barium sulfate, can act as nucleation sites for formation of calcium sulfate. The particular antiscalant to be used should be evaluated during final design.

A system is included for periodic in-place cleaning of membrane elements. For cost estimation, the cleaning materials are assumed to be citric acid and sodium hydroxide. The cleaning frequency is assumed to be three times per year or every 4 months. Preliminary design criteria, based on manufacturers' design programs are given in table 38.

Table 38. Preliminary design of RO skids

	North Westlands	Central Westlands	South Westlands
Feed Flow (gpm)	569	1,689	1,072
Product Flow (gpm)	285	844	536
Reject Flow (gpm)	285	844	536
GE Osmonics AG			
Vessels	12	37	23
Feed/Vessel	47.4	45.6	46.5
Feed Pressure	436	359	416
Permeate TDS (mg/L)	141	115	136
Hydranautics ESPA 4			
Vessels	16	32	21
Feed/Vessel	35.6	52.7	50.9
Feed Pressure	330	281	326
Permeate TDS (mg/L)	1,425	840	1,087
Hydranautics LFC 3			
Vessels	16	32	21
Feed/Vessel	35.6	52.7	50.9
Feed Pressure	424	447	491
Permeate TDS (mg/L)	388	196	239
Koch TFC-HR			
Vessels	12	37	23
Feed/Vessel	47.4	45.6	46.5
Feed Pressure	413	343	398
Permeate TDS (mg/L)	425	280	392
Koch TFC-ULP			
Vessels	12	37	23
Feed/Vessel	47.4	45.6	46.5
Feed Pressure	348	286	335
Permeate TDS (mg/L)	1,067	717	991

The particular membrane elements investigated represent a reasonable range of commercially available membranes taking into consideration the composition of the feedwaters and the expected recovery as product. The low pressure elements,

Hydranautics ESPA 4 and Koch TFC-ULP, proved not to be suitable for this application. Identification of particular elements and manufacturers are not intended to imply selection of these or any specific membrane elements.

It is generally desirable to operate RO equipment as nearly continuously as possible. Plant shutdowns for more than a few hours can cause degradation of membrane element performance. Since the plants are to be operated at constant recovery, the capacity of each plant is required to increase as the volumetric flow of drainage to be treated increases. The supply of feedwater to the Westlands plants would increase approximately as shown by the blue lines in figures 52, 53, and 54. A reasonable increment in capacity is one vessel of membrane elements or nominally 45 gpm. To meet the required increase in capacity with time, each RO rack would be fully supplied with vessels and all piping would be installed, but piping for the vessels that are not required would be capped off using grooved end couplings and pipe caps. As needed, elements would be installed and piping would be connected to accommodate the increased feed availability for the North, Central, and South Westlands as shown by the black lines in figures 52, 53, and 54, respectively. The beginning of the timeline shown on the x-axes would be adjusted according to when the project is actually implemented and drainwater flows begin.

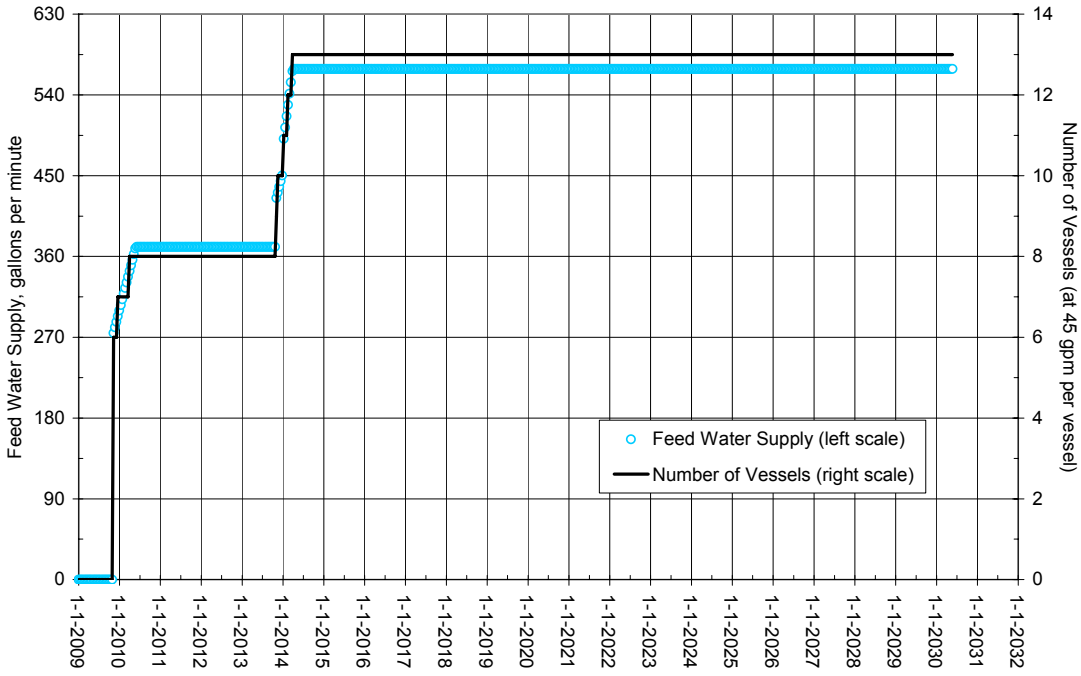

Figure 52. North Westlands feed supply and plant intake capacity.

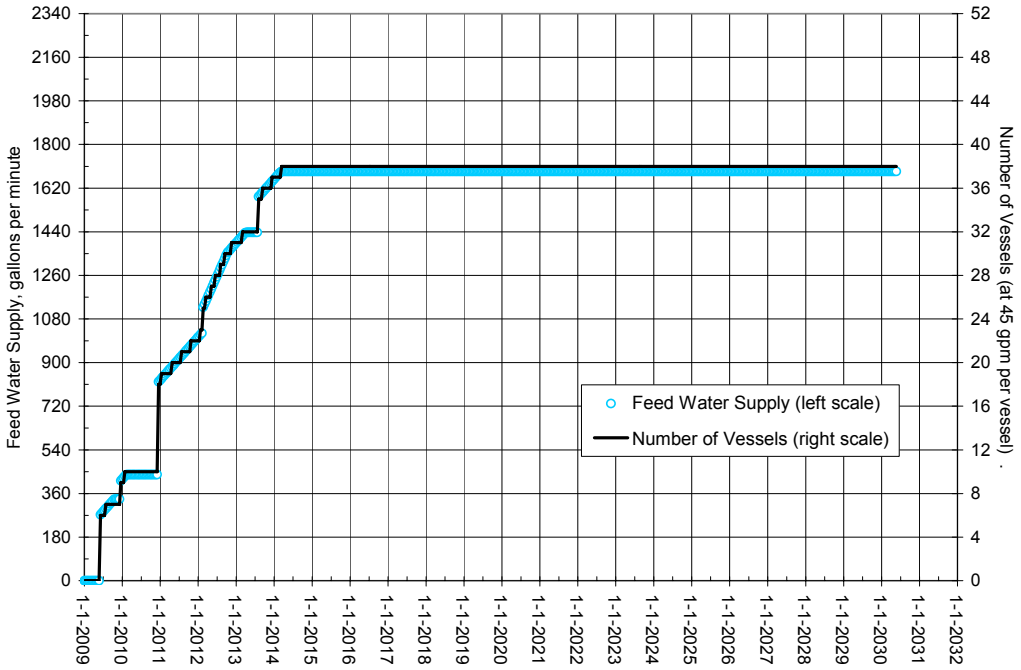

Figure 53. Central Westlands feed supply and plant intake capacity.

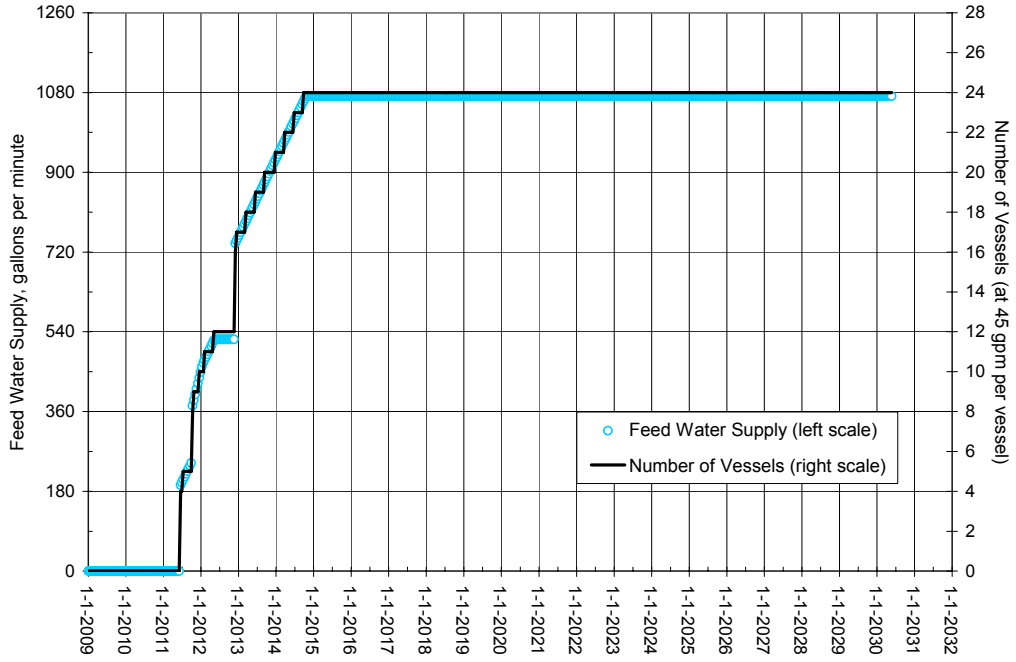

Figure 54. South Westlands feed supply and plant intake capacity.

RO Product Water Disposition

Site-specific designs were not prepared for delivery of product water from the three Westlands RO plants to potential users. The quality of this desalted water would be suitable for blending with local irrigation supplies used on commercial farmlands.

RO Concentrate Disposition

The concentrated waste streams from each RO treatment plant would be conveyed to co-located biotreatment plants to remove selenium prior to disposal in evaporation ponds. The designs for these features are presented in the following sections of this appendix.

Cost Estimates

RO treatment plant costs were estimated using Reclamation's *Water Treatment Estimation Routine* and WTCost©. These cost estimates do not meet the level of detail and accuracy prescribed by Reclamation's guidelines for feasibility-level cost estimates. The cost estimates for the RO treatment plant are considered to be appraisal level. Costs are indexed to April 2006 and are generally rounded to the nearest $100. Cost estimates do not include the costs for conveyance of RO product water to the likely end users (Westlands farmers). The value of the product water is assumed to be greater than the potential costs of delivering it to the local end users.

Procurement and Construction

For simplification of logistics and operation, the most effective and economical process would be to procure the construction of the plants for the Northerly Area and Westlands under a single contract that emphasized uniformity of equipment and controls among the plants. Desalination plants are commonly constructed as turnkey units from pretreatment to post-treatment. The plants for Westlands should be constructed with completion (i.e., the plant ready to run) scheduled for the same time as the water supply systems are in place.

A summary of the RO plant designs is presented in table 39.

Selenium Biotreatment Plants

Three biotreatment plants in Westlands are required for selenium removal and would be co-located with the RO treatment plant and evaporation pond at each of the regional subarea treatment and disposal sites: Westlands North, Westlands Central, and Westlands South. Feasibility designs and cost estimates are presented herein for two of the three proposed Westlands biotreatment plants: Westlands North and Westlands Central. The cost estimate for the third

Table 39. Summary of design of RO plants—Westlands

Parameter	North Westlands	Central Westlands	South Westlands
PLANT			
Nominal Feed Flow (gpm)	569	1,689	1,072
Recovery	50%	50%	50%
Planned Operation (hours/day)	24	24	24
Plant Availability	95%	95%	95%
Operating Temperature	19 ± 6 °C	19 ± 6 °C	19 ± 6 °C
PRETREATMENT			
Feed Storage Tank (gal)	≥ 17,000	≥ 50,000	≥ 32,000
Rapid mix tank volume (gal)	190	560	360
Flocculator volume (cubic feet)	1,520	4,500	2,860
Filter Area (ft^2)	142	420	268
Antiscalant Chemical Addition	6 mg/L	6 mg/L	6 mg/L
Pad Area (ft^2)	675	2,000	1,280
DESALTING UNITS			
Number of Trains	4	4	4
Number of Vessels	19	38	24
Number of Membrane Elements	114	228	144
Nominal Operating Pressure (psi)	424	446	491
Maximum Operating Pressure (psi)	500	500	525
Energy Recovery	No	No	No
PRODUCT DELIVERY			
Nominal Product Flow (gpm)	285	844	536
Product Water Treatment	None	None	None
Product Water Disposal	Unknown	Unknown	Unknown
REJECT DISPOSAL			
Nominal Reject Flow (gpm)	285	844	536
Reject Disposal	to biotreatment	to biotreatment	to biotreatment
OTHER			
Power Requirement (kWh/yr)	959,000	3,230,000	2,110,000
Building Area (ft^2)	5,865	8,383	7,575
Drawing Number	805–D–10418	805–D–10417	805–D–10416

biotreatment plant, Westlands South, is conservatively assumed to be the same cost as the Westlands Central plant, which has a larger capacity. This approach is deemed adequate because:

- Process designs and plant layouts are basically identical among the three Westlands plants. The primary difference between the plants is the treatment capacity (i.e., the quantity of bioreactor modules). Plants of varying size have a varying number of two-stage treatment trains to accommodate the plant design flow but the remaining components are the same.

- The plant flow capacity of the plant that was not designed. Westlands South is 864 acre-ft/yr, which is less than the Westlands Central plant, where the flow capacity is 1,362 acre-ft/yr. Therefore, using the cost estimate for the Westlands Central plant provides a conservative estimate for the smaller Westlands South plant.

- Projected influent selenium concentrations are substantially lower at the Westlands South plant as compared to the two designed plants. Therefore, plant performance is not an issue or factor in using the Westlands Central plant design and cost for estimating the Westlands South plant cost.

- Soil properties and groundwater data collected in proximity to all three proposed plant locations indicate that there would be no significant difference among the three plants with regard to structural foundation requirements, dewatering, and unwatering during construction.

General Description of Biotreatment Process

The heart of the system is the ABMet® selenium biotreatment cells. Multiple trains of two cells in series would be used. Each train would treat a maximum feed flow of 285 gpm. To achieve the required selenium removal efficiency, an EBCT of 12 hours would be used. Each cell (40 feet long by 16 feet wide by 32 feet high) would have a 22-foot-deep bed of media. Pilot testing by ZENON determined that ABMet® technology could remove selenium and nitrate to below 10 µg/L and 10 mg/L, respectively. Therefore, these values were used for the design effluent targets.

The biotreatment main process includes a feed tank, bioreactor trains, and oxidation tank. The backwash mode process flow includes the backwash water storage tank and backwash clarifier. Ancillary systems include nutrient feed, sludge dewatering, and odor control biofilter beds. One of the more important of these ancillary systems is the nutrient material that is used as a carbon source for the micro-organisms in the bioreactor cells. Since the nutrient material is quite viscous, the nutrient system is arranged so that a continuously recirculating supply of nutrient material is available at each bioreactor cell.

The bioreactor cleaning is done by backwashing. A backwash clarifier provides capacity to contain a 20-minute backwash from any bioreactor cell. The intended operation of the backwash clarifier is to provide gravity solids separation, which is anticipated to require less than 24 hours. After gravity separation is complete, a sludge pump would remove the settled solids to the dewatering system.

The dewatering system would use a belt press, which is expected to produce waste solids with a total solids content of 30-40%. At this concentration, the solids would be in the form of a cake, not a liquid. Title 22 of the California Code of Regulations (section [§] 66261.24) defines acceptable quantities of selenium associated with solids as less than 100 parts per million. Since selenium concentrations in the wasted solids would have over 2,000 parts per million, the wasted solids are defined as hazardous and, as such, must be disposed of at a Class 1 hazardous waste landfill. The closest Class 1 landfill is the Kettleman Hills Landfill in Kings County.

The native soils at the proposed biotreatment locations would require that the concrete tanks be supported on pile foundations. The concern for the corrosive nature of the liquids prompts special concrete tank design using type V cement, admixtures, and interior lining. Metals in contact with the water would also be corrosion resistant.

An administration building is included in the layout for each plant. The administration building layout includes a reception area, lab, office, control room, break room, restroom/shower, electrical room, garage, and utility room. The building is a single-level metal building with insulated metal panel walls.

Two other buildings enclose the mechanical and dewatering equipment. These buildings would also be constructed using steel frames and metal panel wall construction. The area contained between the biotreatment trains (gallery) would be enclosed with a roof.

The design layouts for the Westlands North and Westlands Central plants are shown on drawings 805-D-10455 and -10456, respectively. Each biotreatment plant would be co-located with the regional RO treatment plant and evaporation pond facility (refer to figure 3).

Most aspects of the Westlands biotreatment plants are the same or similar to those in the Northerly Area, and only the differences are described in the sections below.

First and Second Stage Bioreactor Cells

All of the first and second stage bioreactor cells are identical internally, regardless of the overall plant design capacity. The number of bioreactor trains sets the plant's design capacity. Each bioreactor train can treat flows that range from 0 to 285± gpm. Table 40 below shows the design capacities for the Westlands North and Central plants.

Table 40. Westlands Bioreactor Plant Sizes[1]

Plant Location	Flow (acre-ft/yr)	Flow (gpm)	Trains[2]
Westlands North	459	285	1 at 285 gpm or 2 at 142.5 gpm
Westlands Central	1,362	844	3 at 281 gpm or 4 at 211 gpm

[1] Westlands South plant not designed.

[2] Plants have a redundant train for use during backwash or maintenance.

The Westlands North plant would have two bioreactor trains, each rated to treat the full plant capacity of 459 acre-ft per year (285 gpm). During normal operation, both bioreactor trains operate to treat about half the feed flow to keep the biomass healthy. Operating at a reduced feed rate is expected to yield better selenium removal, so the redundant train serves a beneficial purpose all of the time. During a backwash operation, all of the feed flow is route to one bioreactor train, while the backwash is taking place in the other.

The Westlands Central plant would have four bioreactor trains, each rated to treat 285 gpm. During normal operation, each bioreactor train treats about one-quarter of the feed flow. During a backwash operation, the feed flow is routed so that the remaining three bioreactor trains treat one-third of the feed flow (281 gpm each, for a total plant capacity of 844 gpm).

Nutrient Tank

The nutrient tank capacity varies between plants. The tanks are designed to contain 5 days of nutrient at a conservative consumption rate of 0.4 gallon per 1,000 gallons treated plus a full tank truck (of approximately 5,000 gallons). In other words, there is always at least 5 days of supply remaining when a truck is expected. The required nutrient tank size for the Westlands North plant is 5,820 gallons; for the Westlands Central plant, it is 7,430 gallons. Each of the Westlands plants would have one nutrient tank, whereas the Northerly Area plant would require two nutrient tanks.

Aerobic Post-Treatment

The aeration blowers for the Westlands North plant are positive displacement, rotary lobe style blowers with VFDs, v-belts, inlet and discharge silencers, acoustical enclosure (with fan) around blower, and blower protection accessories.

The aeration blowers for the Westlands Central plant are multistage centrifugal style blowers with constant speed motors, motorized inlet throttling valves, and blower protection control panels from the factory. The minimum rise to surge pressure is 0.85 psi (grams).

Backwash Clarifier

There is one backwash clarifier provided for each of the Westlands biotreatment plants in contrast to the Northerly Area plant, which requires two clarifiers.

Mechanical Building – Electrical Systems

Calculations for the Westlands plants indicate the requirement for a 500-kVA utility transformer with 480-volt secondary to serve process loads. Two 3-inch conduits, each with 500-kcmil copper phase conductors, would be routed to an 800-ampere switchboard (tentatively) located within the mechanical building. The switchboard would feed one 600-ampere MCC via two 2½-inch conduits with 350-kcmil copper phase conductors and No. 1 AWG copper grounding conductors, located within the mechanical room. The switchboard would also feed a single 200-ampere MCC located within the dewatering room via a single 2-inch conduit with No. 3/0 AWG copper phase conductors and one No. 6 AWG copper grounding conductor. All pumps and fans would be fed from the respective MCC. Lighting is fed from the 208/120-volt panel.

Plant Design Summary

The primary process, equipment, and design parameters for the Westlands North and Westlands Central biotreatment plants are presented in table 41. As explained previously, a site-specific design for the Westlands South plant was not prepared.

Evaporation Ponds

Most aspects of the design of the Westlands evaporation ponds are the same or similar to those in the Northerly Area, and only the differences are described in the sections below.

Number and Location of Evaporation Pond Facilities

Evaporation pond facilities were designed for each of the three drainage service subareas: Westlands North, Westlands Central, and Westlands South. Each pond facility receives treated drainage from the reuse facilities located in its subarea. Alternative configurations of quantities of ponds and arrangements with 11 reuse facilities were considered but found to be more costly due to greater costs of conveying the drainage to the evaporation ponds.

Each evaporation pond facility services a select number of reuse facilities determined by cost of conveyance. Placement of evaporation facilities to allow for maximizing conveyance via gravity flow was determined by designers of the conveyance system. As pumping costs are refined, cost comparisons may be made for relocation of evaporation ponds. It was determined that this refinement would be performed during final design efforts.

Consideration was also given to land use in locating the evaporation ponds. Priority was given to land taken out of service due to land retirement. Land with existing structures, such as homes or existing farm structures, were not considered.

Table 41. Biotreatment Design Summary

Component	Westlands North	Westlands Central
Plant Footprint Dimensions (length x width in ft)	277 x 247	325 x 270
Plant Flow (acre-ft/yr)	459	1362
Plant Flow (gpm)	285	844
Plant Flow (Mgpd)	0.41	1.22
No. of Bioreactor Trains	2	4
No. of Bioreactor Cells	4	8
Bioreactor Cell Dimension (ft)	40 L x 16 W x 32 H	40 L x 16 W x 32 H
Bioreactor Cell Surface Area (ft^2)	640	640
Bioreactor Cell Bed Volume (ft^3)	13,717	13,717
Feed Tank Volume (gal)	30,000 (nominal)	30,000 (nominal)
Feed Tank Dimensions (ft)	18 Ø x 18 H	18 Ø x 18 H
Filtrate Tank Volume (gal)	30,000 (nominal)	30,000 (nominal)
Filtrate Tank Dimensions (ft)	18 Ø x 18 H	18 Ø x 18 H
No. of Nutrient Tanks	1	1
Nutrient Tanks Volume (gal)	8,400 (nominal)	8,400 (nominal)
Nutrient Tank Dimensions (ft)	12 Ø x 10 H	12 Ø x 10 H
Backwash Clarifier Volume (gal)	181,400	181,400
Backwash Clarifier Dimensions (ft)	45 Ø x 16 H	45 Ø x 16 H
Backwash Clarifier Side Water Depth (ft)	14	14
No. of Backwash Clarifiers	1	1
Backwash Storage Tank Volume (gal)	190,000 (nominal)	190,000 (nominal)
Backwash Storage Tank Dimensions (ft)	45 Ø x 18 H	45 ft Ø x 18 ft H
No. of Oxidation Tanks	1	1
Oxidation Tank Volume (gal)	137,000	405,000
Oxidation Tank Dimensions (ft)	38 Ø x 18 H	65 Ø x 18 H
Recycle Pumps No. (Constant Speed)	4	8
Recycle Pumps Capacity (gpm)	350	350
Feed Pumps Quantity (Constant Speed)	2 (1 duty)	2 (1 duty)
Feed Pumps Capacity (gpm)	285	844
Nutrient Pumps No. (Constant Speed)	2 (1 duty)	2 (1 duty)
Nutrient Pumps (gpm)	5	5
Sludge Pump Quantity (Variable Speed)	1	1
Sludge Pump (gpm)	60-300	60-300
Belt Press Dewatering Quantity	1	1
Belt Press Size (m)	2	2

Table 41. Biotreatment Design Summary (continued)

Component	Westlands North	Westlands Central
Belt Press Capacity (gpm)	60 - 150	150
Drain Sump Pump Quantity	2 (1 duty)	2 (1 duty)
Drain Sump Pump Capacity (gpm)	200	200
Backwash Pump No. (Con. Speed and FCV)	1	1
Backwash Pump (gpm)	4,480-8,960	4,480-8,960
Oxidation Blower Quantity	2 (1 duty)	2 (1 duty)
Oxidation Blower Capacity (cfm)	400	800
Foul Air Blower Quantity	2 (1 duty)	2 (1 duty)
Foul Air Capacity (cfm)	2,300	3,900
Biofilter Quantity	2	2
Biofilter Capacity (cfm)	1,150	1,950
Biofilter Dimensions (ft)	30 L x 20 W x 2.5 H	40 L x 30 W x 2.5 H
Septic Tank Capacity (gal)	1,500	1,500
Septic Drain Field Area (ft^2)	6,050	6,050
Septic Drain Field Dimensions (ft)	110 L x 55 W	110 L x 55 W
Septic Drain Replacement Area (ft^2)	6,050	6,050
Site Well Capacity (gpm)	40	40

Solids Generation Quantities and Disposal

Table 42 shows the estimated amount of solids produced by backwashing the bioreactors at the Westlands plants, based on average annual flows.

Table 42. Biotreatment solids production estimates

Description	Units	Westlands North	Westlands Central
Flow Rate	acre-ft/yr	459	1,362
Backwash Solids			
Backwash Frequency	/yr	24	72
Total Mass	lb/backwash	6,271	6,214
Backwash Conc.	mg/L	4,177	4,139
Total Mass per year	lb/yr	150,501	447,422
Selenium Concentration[1]	mg Se/kg TSS	2,468	1,500

[1]Dry weight basis.

The locations and layout of each proposed evaporation pond facility in Westlands are shown on drawings 805-D-10439 through 805-D-10441.

Evaporation Process Design and Cell Sizing

Inflows to the evaporation ponds are based on the effluent discharges from the treatment plants described in previous sections of this report and are shown in figure 55.

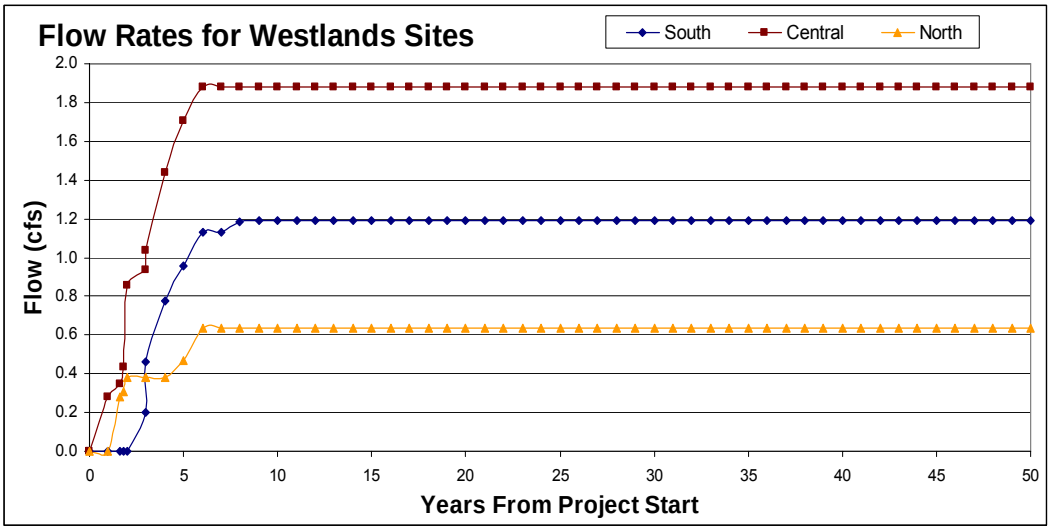

Figure 55. Average inflows to Westlands evaporation ponds.

Table 43 presents the cell sizing analysis results by individual cell size and salinity (mg/L TDS and specific gravity). The maximum wetted area is the sum of the four concentrating cells, plus one of the four terminus cells, because only one terminus cell will be in operation at any one time. The total land area required over the 50-year planning period includes all four terminus cells but does not include the area needed for embankments, roads, and other site features.

Environmental Mitigation Facilities

Most aspects of the design of the Westlands mitigation facilities are the same or similar to those in the Northerly Area, and only the differences are described in the sections below. Typical design layouts for the different types of mitigation facilities are shown on drawings 805-D-10433 thru 805-D-10437.

Mitigation Land Areas – Initial Estimates and Contingency Allowances

The analyses of the environmental impacts and development of the mitigation requirements for the Westlands facilities are described in the EIS. The

Table 43. Evaporation cell sizes and salinities for the three Westlands areas

Westlands North (k = ≤ $1x10^{-6}$ cm/sec)

	Size (acres)	Salinity (TDS)	Specific Gravity
Cell 1	60.8	64,509	1.051
Cell 2	24.3	119,978	1.082
Cell 3	12.2	200,395	1.133
Cell 4	6.1	286,587	1.194
Four terminus cells	72.4		
Maximum wetted area	121.5		
Total land required	175.8		
Tons of salt lost per year =	0		

Westlands Central (k = ≤ $1x10^{-6}$ cm/sec)

	Size (acres)	Salinity (TDS)	Specific Gravity
Cell 1	181.1	61,866	1.049
Cell 2	72.4	116,272	1.080
Cell 3	36.2	197,255	1.131
Cell 4	18.1	287,587	1.194
Four terminus cells	205.2		
Maximum wetted area	359.1		
Total land required	513.0		
Tons of salt lost per year =	0		

Westlands South (k = ≤ $1x10^{-6}$ cm/sec)

	Size (acres)	Salinity (TDS)	Specific Gravity
Cell 1	114.9	61,850	1.049
Cell 2	46.0	116,225	1.080
Cell 3	23.0	197,239	1.131
Cell 4	11.5	287,587	1.194
Four terminus cells	130.0		
Maximum wetted area	227.9		
Total land required	325.4		
Tons of salt lost per year =	0		

EIS analyses provide estimates of the required mitigation for each three different types of habitat. These estimates are referred to as the "initial estimates" because they are the amount of mitigation habitat areas that would be constructed initially, along with the construction of the other drainage service components. Once the drainage service has begun, the evaporation and mitigation facilities would be monitored to assess actual impacts to birds and the efficacy of the AH and CH to mitigate those impacts.

The EIS recognizes that the initial mitigation estimates are highly uncertain and that actual mitigation requirements (determined after monitoring) may be less than, or greater than, the initial estimates. If less mitigation is required, then the habitat areas may subsequently be reduced in size. If more mitigation is required, then additional habitat would be constructed in a second phase. A contingency allowance of land area is included in the designs and cost estimates to account for the potential second phase of mitigation construction. The process of initial construction, monitoring, re-evaluation, and subsequent adjustments to the mitigation habitat land areas is referred to as adaptive management. The EIS initial estimates of required mitigation land area and the adaptive management contingency allowance for each of the three habitat types in Westlands are shown in table 44.

Table 44. Initial estimates and contingency allowance of mitigation land areas for Westlands (Reclamation 2006)[1]

	Shallow water AH (acres)	Deep water CH (acres)	Shallow water CH (acres)	Totals (acres)
Initial mitigation estimate	307	134	22	274
Adaptive/contingency allowance	307	134	22	274
Total area estimated for this alternative	614	268	44	926

[1] Mitigation area estimates assume evaporation basin inflow total selenium less than 10 µg/L, nearly vertical side walls, and water depths maintained above 4 feet deep.

Selection of Potential Mitigation Sites

The initial site inventory review identified numerous potential sites for establishing mitigation habitat. These areas were screened against factors such as proximity to project drainage service facilities, land use or land retirement tracts, existing habitat, groundwater conditions, and proximity to the water supply and outflow conveyance systems. Mitigation sites selected for the feasibility designs meet the site criteria for AH and CH site development as described in the section for the proposed facilities in the Northerly Area. Aerial photographs of the proposed AH sites for Westlands North, Westlands Central, and Westlands South are provided in figures 56, 57, and 58, respectively. The areas shown in these

figures are larger than the land area estimates specified in table 44. The habitats would be constructed within these areas, but final site selection would occur during final design.

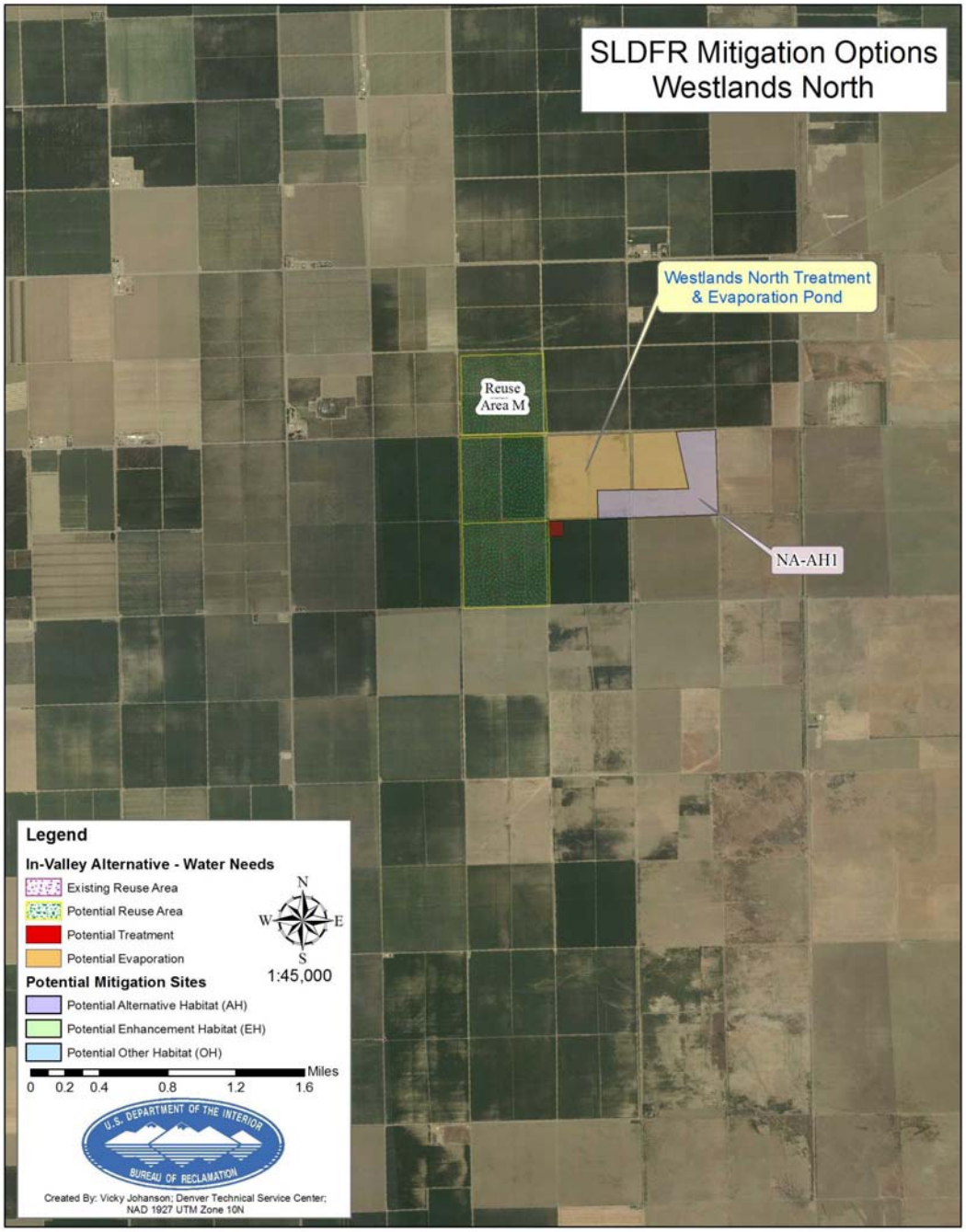

Figure 56. Location of Proposed AH Mitigation Facilities in Westlands North.

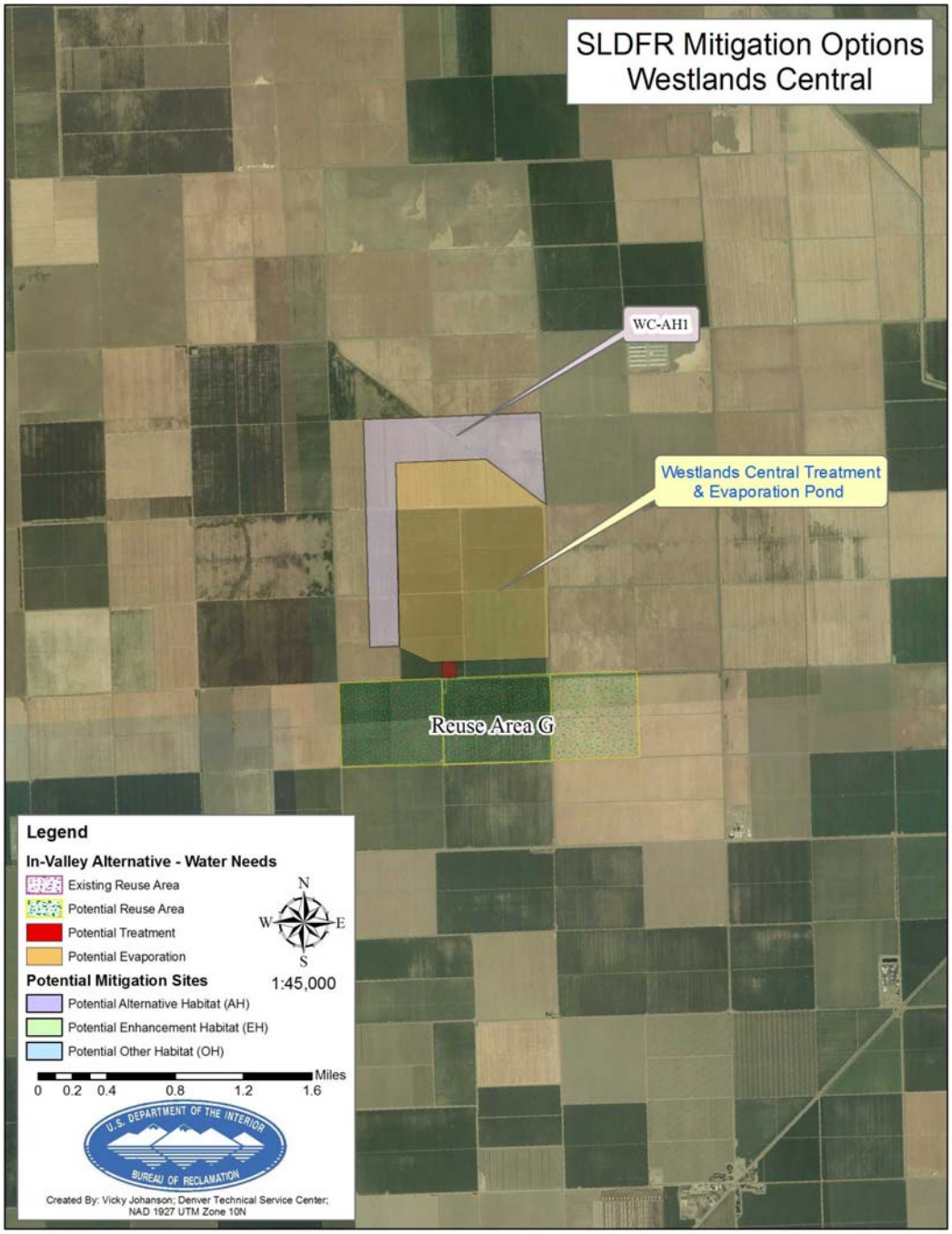

Figure 57. Location of Proposed AH Mitigation Facilities in Westlands Central.

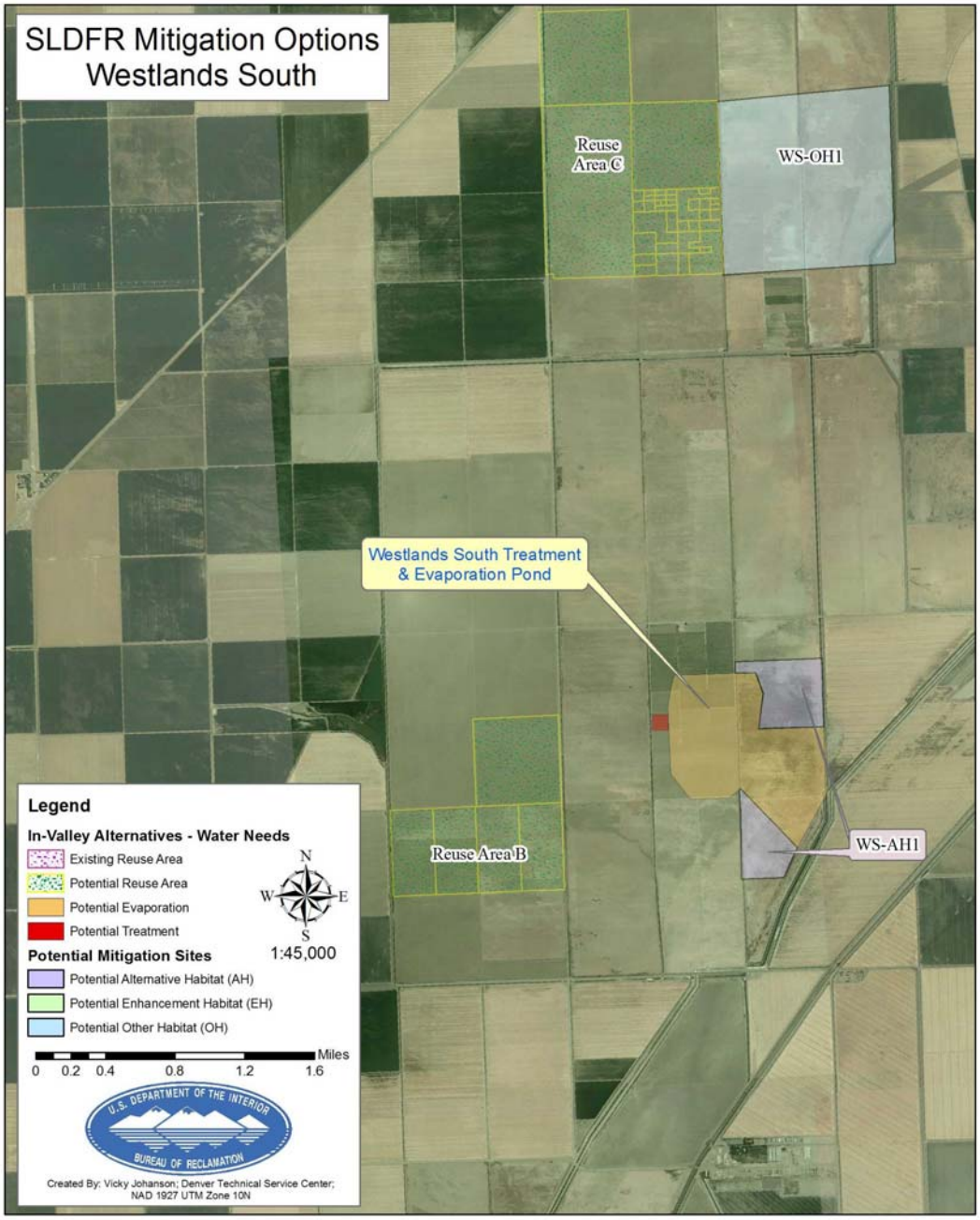

Figure 58. Location of Proposed AH Mitigation Facilities in Westlands South.

San Luis Drainage Feature Re-evaluation

Feasibility Design Appendix
Attachment 1 – Feasibility Design Appendix Drawings

U.S. Department of the Interior
Bureau of Reclamation
Mid-Pacific Region
Sacramento, California

November 2007

Design Drawings List

40-D-6746	Buried Pipe Drains, Structural Details
805-D-10401	WWD South, Central and North Area Pumping Plants, General Site Plans and Section
10402	WWD South, Central and North Area Pumping Plants Section
10403	WWD Tailwater Recovery Pumping Plants; Plans, Section and Isometric View
10404	Northerly Area, FC-5Drain Pumping Plants, General Site Plan
10405	Northerly Area, FC-5 Drain Pumping Plants, Plan and Sections
10406	Northerly Area, PO-2 and Russell Avenue Drain Pumping Plants, General Site Plan
10407	Northerly Area, PO-2 and Russell Avenue Drain Pumping Plants, Plan and Sections
10408	Northerly Area, Three-Pump Field Drain Pumping Plants, General Site Plan
10409	Northerly Area, Three-Pump Field Drain Pumping Plants, Plan and Sections
10410	Northerly Area, Two-Pump Field Drain Pumping Plants, General Site Plan
10411	Northerly Area, Two-Pump Field Drain Pumping Plants, Plan and Sections
10412	WWD Regulating Tanks, Site Plan
10413	WWD Regulating Tanks, Sections
10414	Northerly Area Regulating Tanks, Site Plan
10415	Northerly Area Regulating Tanks, Sections
10416	WWD South RO Plant Layout
10417	WWD Central RO Plant Layout
10418	WWD North RO Plant Layout
10419	Northerly Area RO Plant Laytout
10420	Electrical Installation, WWD Pumping Plant, Motor Control Center and Transformer Load Center
10421	Electrical Installation, South WWD Pumping Plant, 480 volt Distribution Panelboard and Load Center
10422	Electrical Installation, Central WWD Pumping Plant, 480 volt Distribution Panelboard and Load Center
10423	Electrical Installation, North WWD Pumping Plant, 480 volt Distribution Panelboard and Load Center
10424	Electrical Installation, WWD Pumping Plant, Fixed and Adjustable Speed Drive Schematic Diagrams
10425	Electrical Installation, DMC Drainage Northerly Area Pumping Plant, 480 Volt Distribution Panelboard and Load Center
10426	Electrical Installation, Conveyance Northerly Area Pumping Plant, 480 volt Distribution System and Load Center
10427	Electrical Installation, Conveyance Northerly Area Pumping Plant, 480 volt Distribution System and Load Center
10428	Electrical Installation, Drainage Canal Northerly Area Pumping Plant, 480 volt Distribution System and Load Center

10429 Electrical Installation, Drainage Canal Northerly Area Pumping Plant, 480 volt Distribution System and Load Center
10430 Electrical Installation, Drainage Canal Northerly Area Pumping Plant, 480 volt Distribution System and Load Center
10431 Electrical Installation, Northerly Area Pumping Plant, Fixed and Adjusted Speed Drive Schematic Diagrams
10432 Electrical Installation, South WWD Pumping Plant, Farm Sump Motor Control Schematic Diagram
10433 Northerly Area and WWD, Alternative Habitat — Shallow, Representative Site Plan Layout
10434 Northerly Area and WWD, Compensation Habitat — Deep Water, Representative Site Plan Layout
10435 Northerly Area and WWD, Compensation Habitat — Shallow, Representative Site Plan Layout
10436 Northerly Area and WWD, Mitigation Site Water Supply Systems, Wier Outlet Structure Plans and Sections
10437 WWD — Northerly Area, Mitigation Site Water Supply Systems, Outlet Structure Access Ramps
10438 Northerly Area, Evaporation Pond Layout
10439 WWD North, Evaporation Pond Layout
10440 WWD Central, Evaporation Pond Layout
10441 WWD South, Evaporation Pond Layout
10442 Perimeter Wall and Interior, Sheet Pile Option (Evap)
10443 Cross Sections for Walls, Perimeter and Interior Walls, Cement-Bentonite Option (Evap)
10444 Plan and Section, Gate Structure (Evap)
10445 through 10447 — no drawings
10448 Northerly Area and WWD, Collection and Conveyance Systems, Typical Profiles
10449 Northerly Area and WWD, Road, Canal and River Crossings, Plan and Profiles
10450 Northerly Area and WWD, Typical Trench Section
10451 Northerly Area, Electrical Installation, Northerly Control Flow Diagram
10452 Northerly Area and WWD, Electrical Installation, Farm Well Control Panel General Arrangement
10453 Northerly Area and WWD, Electrical Installation, Farm Well Control Panel Layout
10454 WWD, Electrical Installation, Westlands Control Flow Diagram

Selenium Biotreatment Plant Drawings

805-D-10455 General Plant Site Layout Plan (Westlands North)
10456 General Plan Site Layout Plan (Westland Central)
10457 General Plant Site Layout Plan (Northerly Plant)
10458 Bioreactor Foundation Plan and Section
10459 Backwash Clarifier Plan and Section
10460 Concrete Tank Foundation Plan and Section (typ)
10461 Administration Building Plan
10462 Administration Building Elevations
10463 Mechanical Building Plan
10464 Mechanical Building Elevations
10465 Solids Dewatering Building Plan
10466 Solids Dewatering Building Plan (Large Facility—Northerly)
10467 Solids Dewatering Building Elevations
10468 Main Process Hydraulic Profile
10469 Backwash Hydraulic Profile

10470 Bioreactor Lower Tank Plan (typ. All cells)
10471 Bioreactor Upper Tank Plan (typ. All cells)
10472 Bioreactor Section (typ. All cells)
10473 Pipe Centerline Layout Plan (Small)
10474 Pipe Centerline Layout Plan (Medium)
10475 Pipe Centerline Layout Plan (Large—Northerly)
10476 Oxidation Tank Diffuser Layout (Small, Medium, Large)
10477 Administration Building, HVAC Plan
10478 Administration Building, HVAC Details
10479 Administration Building, HVAC Details
10480 Administration Building, HVAC Details
10481 Administration Building, Plumbing Plan
10482 Administration Building, Plumbing Plan
10483 Administration Building, Plumbing Details
10484 Network Drawing Legend
10485 Process Flow Diagram
10486 Bioreactor Feed Pipe Network Drawing
10487 Bioreactor Pipe Network Drawing
10488 Backwash Supply and Oxidation Tank Pipe Network Drawing
10489 Backwash Waste Pipe Network Drawing
10490 Nutrient Pipe Network Drawing
10491 Drainage Pipe Network Drawing
10492 Foul Air Pipe Network Drawing
10493 Sludge Handling—Large System Network Drawing
10494 SCADA System Block Diagram
10495 Electrical Large Facility (1 of 2)—Northern
10496 Electrical Large Facility (2 of 2)—Northern
10497 Electrical Medium Facility
10498 Electrical Small Facility
10499 Administration Building Lighting Plan and One-Line Diagram

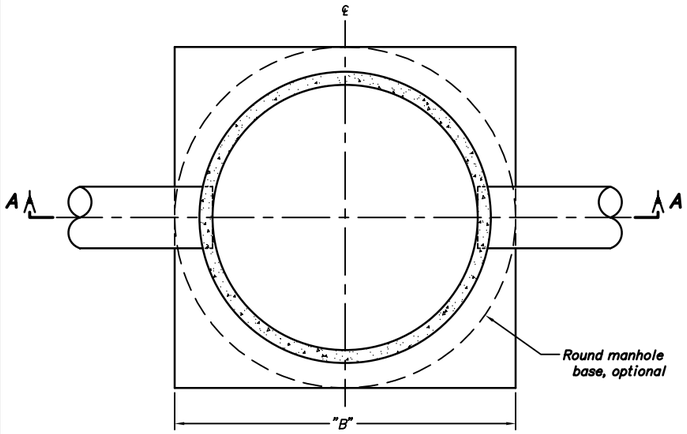

PLAN OF MANHOLE

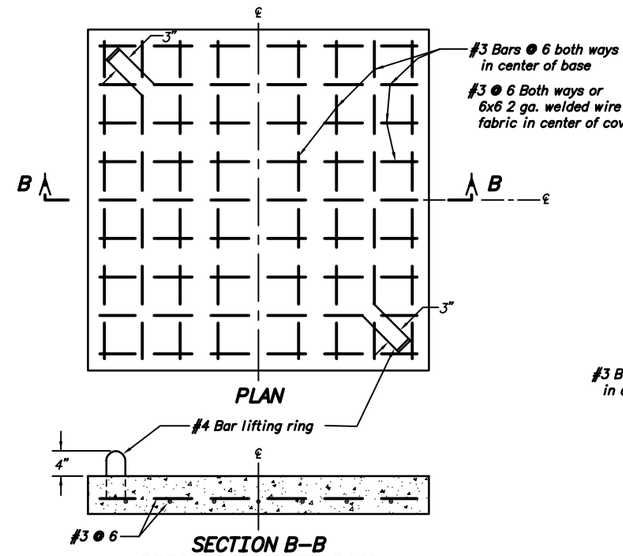

PLAN

SECTION B–B
PRECAST CONCRETE BASE SLAB DETAIL

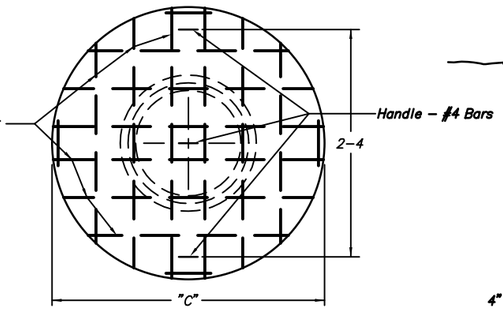

PLAN OF MANHOLE COVER

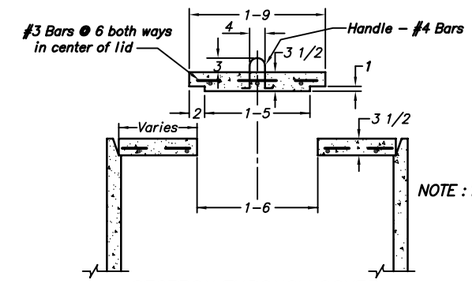

NOTE : For 42" and 48" manholes offset access port to 12" from edge of cover at one point

SECTION THROUGH COVER

MANHOLE AND BASE DIMENSIONS

PIPE DIAMETER	"A"	"B"	"C"
36"	3–0	4–0	3–3
42"	3–6	4–6	3–9
48"	4–0	5–6	4–3

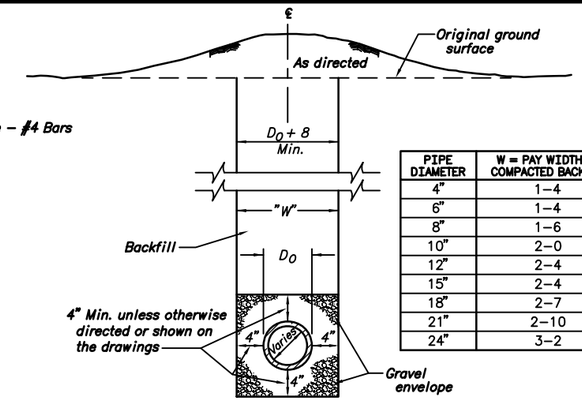

PIPE DIAMETER	W = PAY WIDTH FOR COMPACTED BACKFILL
4"	1–4
6"	1–4
8"	1–6
10"	2–0
12"	2–4
15"	2–4
18"	2–7
21"	2–10
24"	3–2

TYPICAL TRENCH SECTION

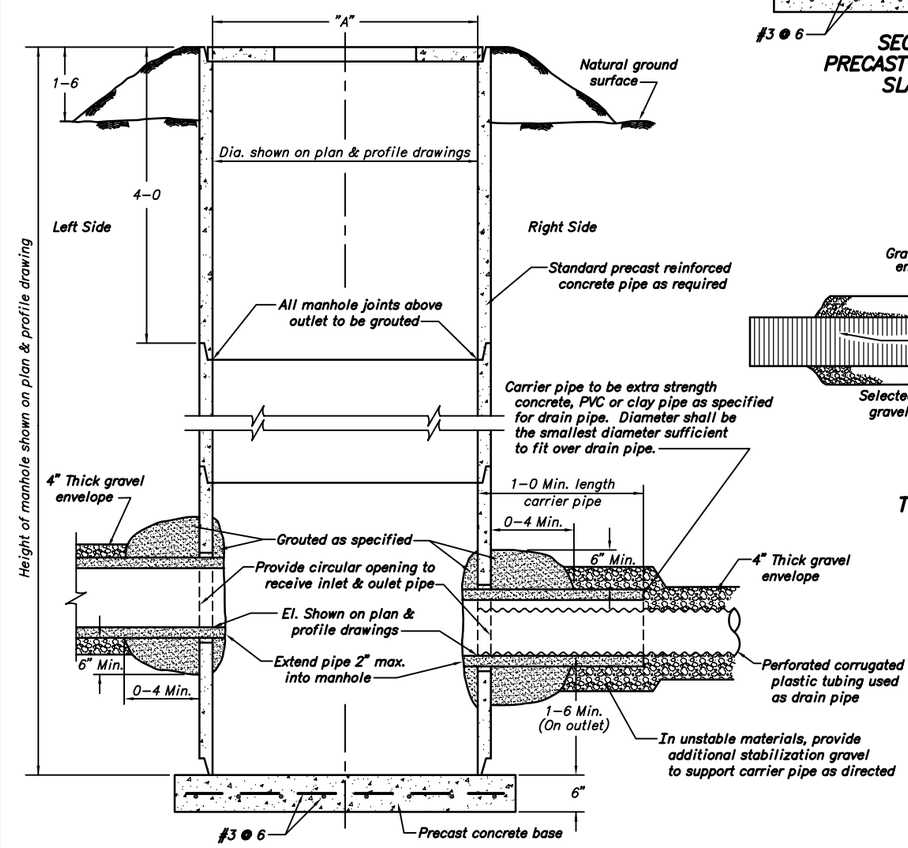

SECTION A–A
(REINFORCEMENT NOT SHOWN IN PIPE OR COVER)

Right Side – Typical manhole connection using perforated corrugated plastic drain pipe.
Left Side – Typical manhole connection using clay pipe, concrete pipe, polyvinyl chloride pipe, or double wall polyethylene pipe.

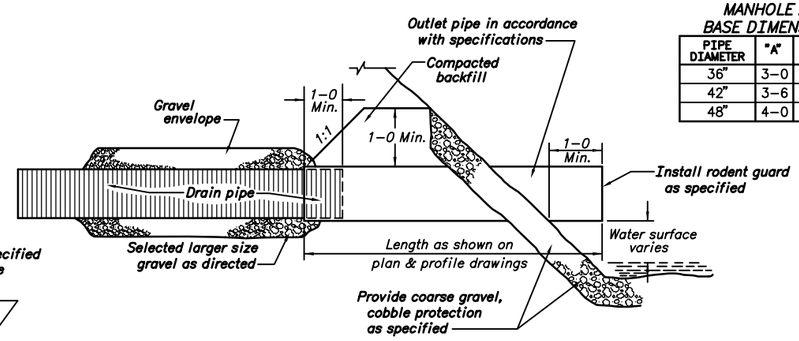

TYPICAL PIPE OUTLET & PROTECTION

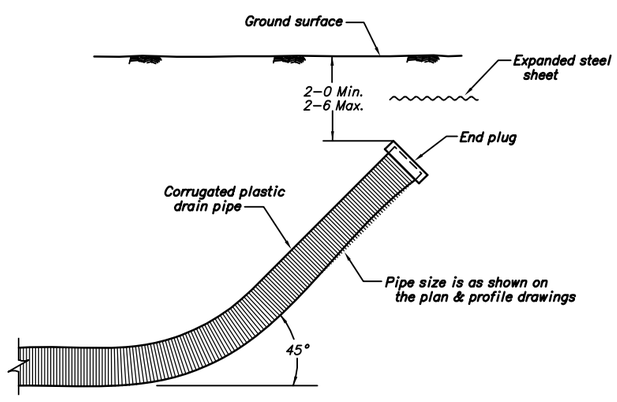

TYPICAL PIPE DRAIN END

NOTE : Omit gravel envelope from the drain end station to the end of the riser pipe

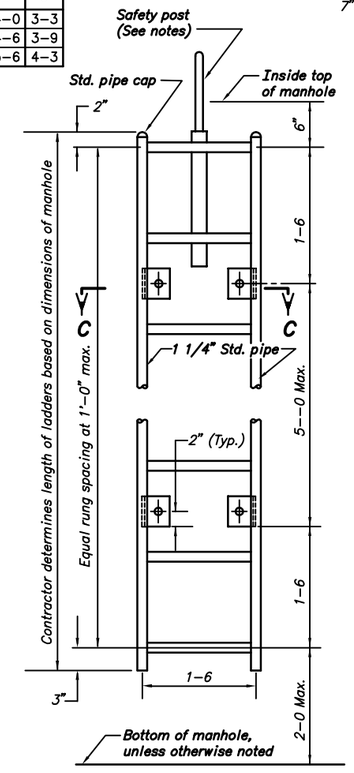

LADDER

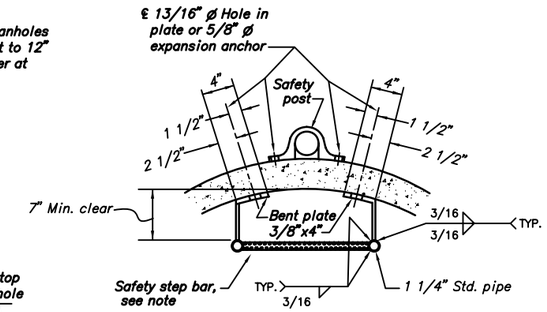

SECTION C–C

LADDER NOTES

Sections and details not drawn to scale.
Fabricate all miscellaneous metalwork from ASTM A36 steel unless otherwise noted.
Details, welds, and other connections shown are typical for all similar conditions.
Galvanize all ferrous metalwork after fabrication.
Contractor determines ladder lengths based on dimensions of manholes.
Shop weld ladders and grind all welds smooth.
Safety step bars are equal to Safety Step Bar No. 627 as manufactured by Bustin Industrial Products, Incorporated or "Tread Grip" as manufactured by Morton Manufacturing Company.
For all ladders provide a safety post equal to safety post Model 1 manufactured by Bilco Company.

ALWAYS THINK **SAFETY**

UNITED STATES
DEPARTMENT OF THE INTERIOR
BUREAU OF RECLAMATION
STANDARD DESIGNS

BURIED PIPE DRAINS

STRUCTURAL DETAILS

DESIGNED G. D. SANDERS CHECKED A. J. CUNNINGHAM
DRAWN R. WESTPHAL TECH. APPR. G. D. SANDERS
APPROVED R. TEKRONY
MANAGER, GROUNDWATER AND DRAINAGE

CADD SYSTEM	CADD FILENAME	DATE AND TIME PLOTTED
AutoCAD Rel. 16.2a	4006746.DWG	MARCH 14, 2007 13:13
DENVER, COLORADO	MARCH 9, 1998	40–D–6746

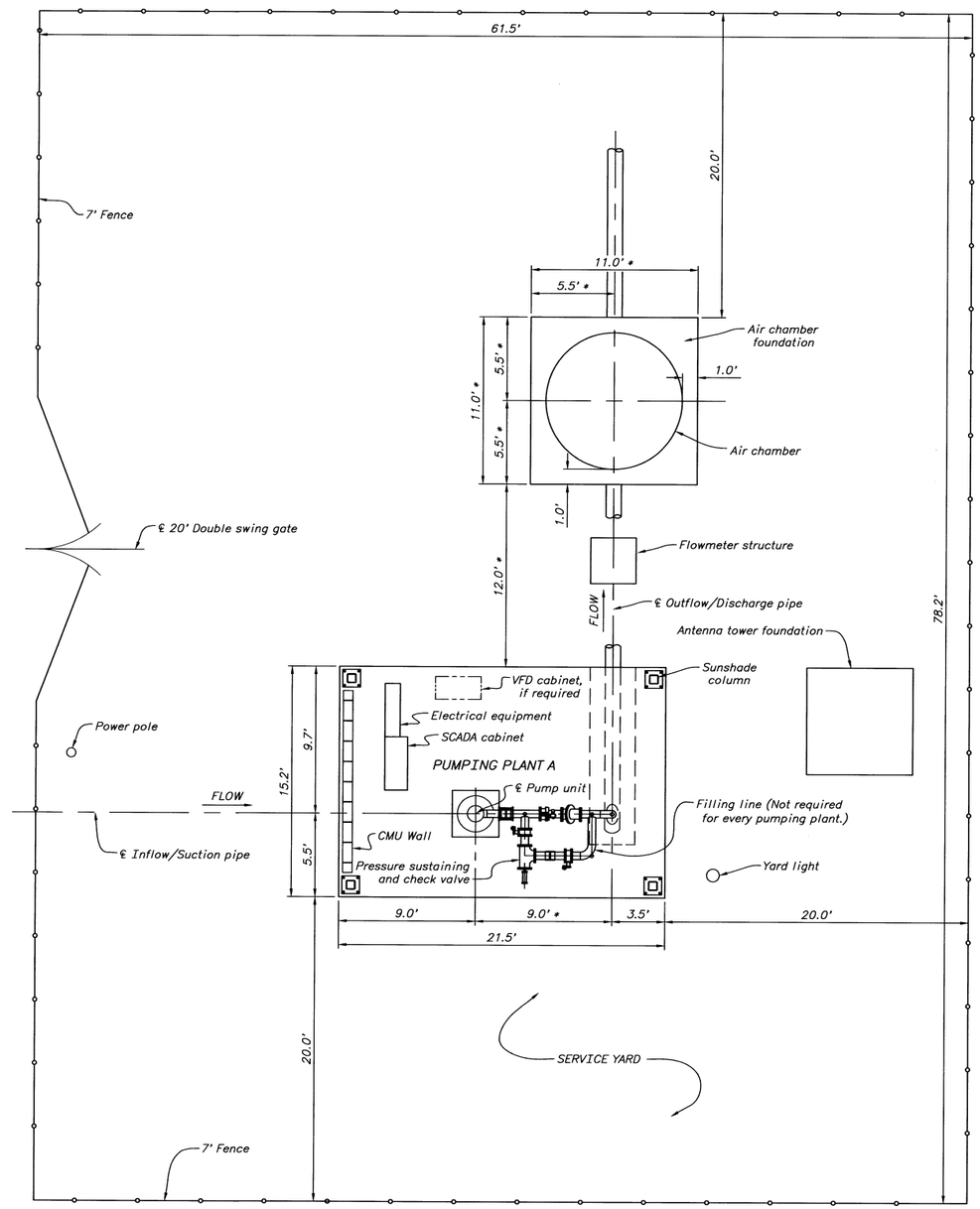

GENERAL SITE PLAN – WESTLANDS WATER DISTRICT SERVICE AREAS – PUMPING PLANT A AND SERVICE YARD
(NO SCALE)

WESTLANDS WATER DISTRICT – SOUTH – PLANT DATA

Pumping Plant	Plant Location	Q/pump (gpm)	TDH (ft.)	D (in.)	Ground Elev. (ft.)	Can bottom Elev. (ft.)	Sump can Dia. (in.)	Pipe Dia. (in.) Inflow	Pipe Dia. (in.) Outflow	Air chamber (Dia. x H)	Motor (rated HP)
A	SD019C	269	74	9.38	222.0	206	12	6	8	9 x 9	7.5
B	SF033D	418	49	9.38	215.0	198	14	8	8	9 x 9	7.5
C	SF015A	661	159	11.25	215.0	198	16	10	8	13 x 13	40

WESTLANDS WATER DISTRICT – CENTRAL– PLANT DATA

Pumping Plant	Plant Location	Q/pump (gpm)	TDH (ft.)	D (in.)	Ground Elev. (ft.)	Can bottom Elev. (ft.)	Sump can Dia. (in.)	Pipe Dia. (in.) Inflow	Pipe Dia. (in.) Outflow	Air chamber (Dia. x H)	Motor (rated HP)
D	SO029A	925	155	11.25	207.0	190.0	18	12	12	9 x 9	50
E	WJ003T	296	140	9.38	237.0	221.0	12	6	7	15 X 15	15
F	WI011V	154	17	7.75	270.0	254.0	8	6	8	NONE	1
G	SN020B	405	70	9.38	217.0	200.0	14	8	7	6 X6	10
H	WR009T	577	180	9.38	178.0	161.0	14	8	10	6 X 6	40

WESTLANDS WATER DISTRICT – NORTH – PLANT DATA

Pumping Plant	Plant Location	Q/pump (gpm)	TDH (ft.)	D (in.)	Ground Elev. (ft.)	Can bottom Elev. (ft.)	Sump can Dia. (in.)	Pipe Dia. (in.) Inflow	Pipe Dia. (in.) Outflow	Air chamber (Dia. x H)	Motor (rated HP)
M	WX014V	361	76	7.75	202.0	186.0	12	8	6	6 X 6	10
N	WAA25T	153	107	5.81	219.0	203.0	8	6	6	9 x 9	7.5
O	WBB36V	202	121	5.81	175.0	159.0	8	6	6	NONE	10

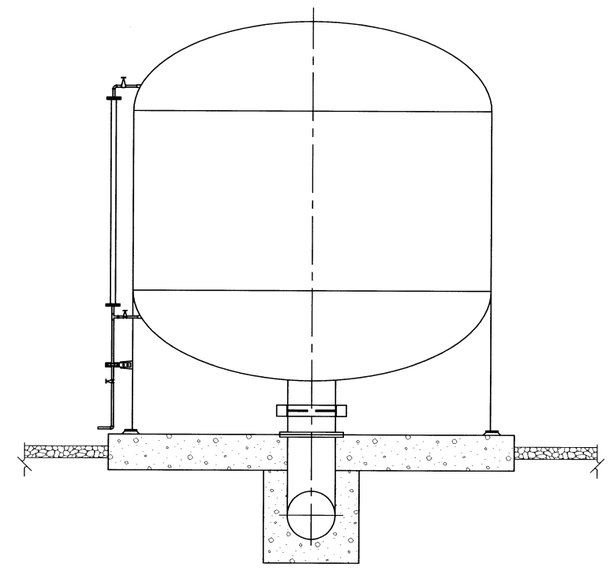

SECTION THROUGH AIR CHAMBER
(15'–0" DIA. SHOWN)

1 0 1 2 3 4 5
SCALE OF FEET

ABBREVIATIONS

VFD – Variable Frequency Drive
SCADA – Supervisory Control and Data Aquisition
CMU – Concrete Masonry Unit
D – Pump Bell Diameter
TDH – Total Dynamic Head
WS – Water Surface

NOTES

1. Topography at pumping plant site is not available. A site ground surface elevation (shown in table) was estimated based on available information.

2. No subsurface geologic exploration was performed at the pumping plant site. The area soil is generally classified as mostly silty clays. The largest particle size expected is sand.

3. * These dimensions vary depending on the size and configuration of the equipment required.

ALWAYS THINK SAFETY

UNITED STATES
DEPARTMENT OF THE INTERIOR
BUREAU OF RECLAMATION
CENTRAL VALLEY PROJECT
WEST SAN JOAQUIN DIVISION – SAN LUIS UNIT – CALIFORNIA

DRAINAGE FEATURE RE–EVALUATION FEASIBILITY STUDY

WESTLANDS WATER DISTRICT

SOUTH, CENTRAL, AND NORTH AREA PUMPING PLANTS GENERAL SITE PLAN AND SECTION

DESIGNED BY
REVIEWED BY M.A. Dilkes, P.E.

DENVER, COLORADO 2006–05–17 SHEET 1 OF 2 805–D–10401

K

CAD SYSTEM
CAD FILENAME
DATE AND TIME PLOTTED
PLOTTED BY

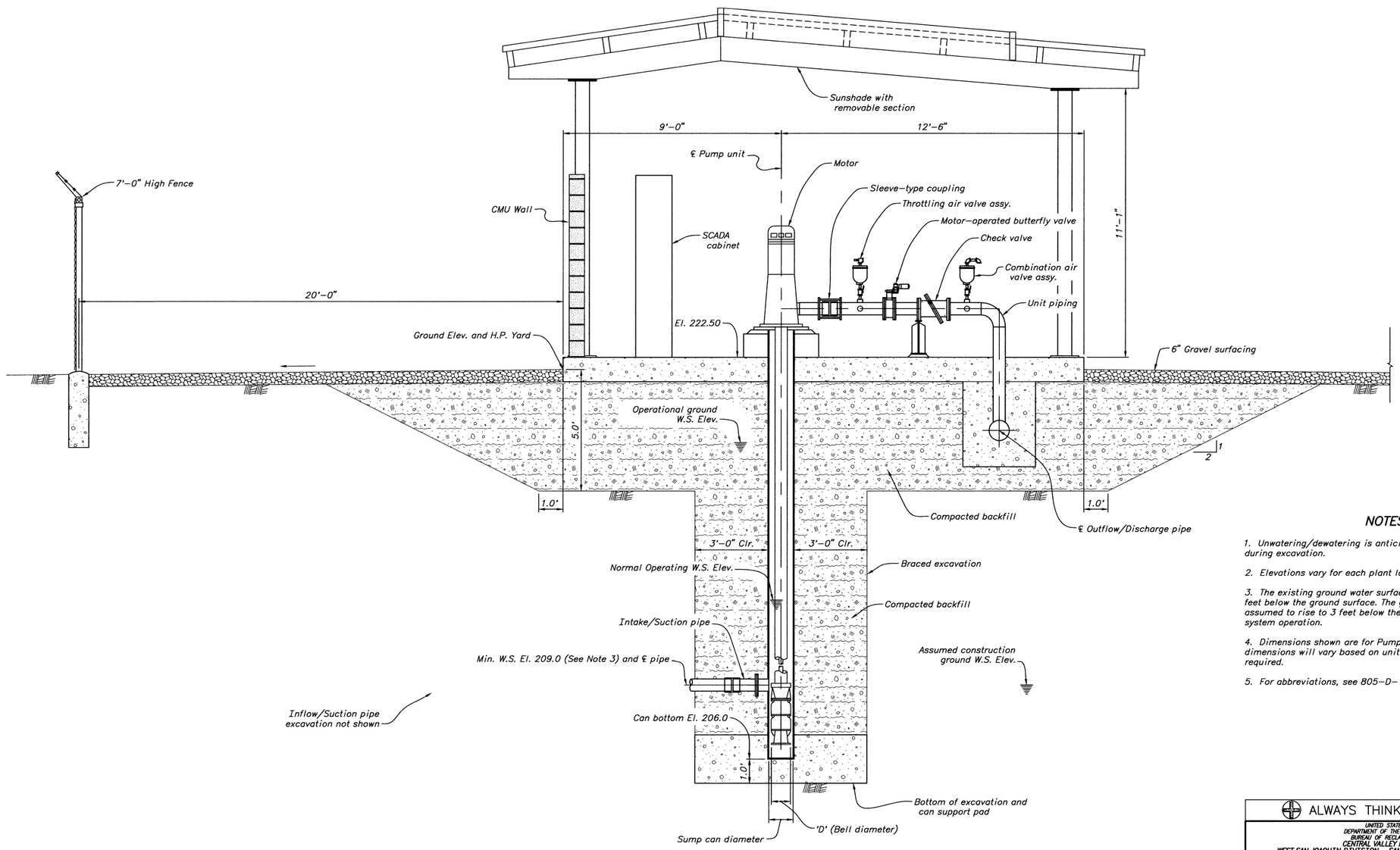

SECTION THROUGH PLANT – WESTLANDS WATER DISTRICT SERVICE AREAS – PUMPING PLANT A AND SERVICE YARD

NOTES

1. Unwatering/dewatering is anticipated at pumping plant during excavation.
2. Elevations vary for each plant location.
3. The existing ground water surface is estimated to be 13 feet below the ground surface. The ground water surface is assumed to rise to 3 feet below the ground surface during system operation.
4. Dimensions shown are for Pumping Plant A. These dimensions will vary based on unit and discharge pipe required.
5. For abbreviations, see 805–D–10401.

1 0 1 2 3 4 5
SCALE OF FEET

ALWAYS THINK SAFETY

UNITED STATES
DEPARTMENT OF THE INTERIOR
BUREAU OF RECLAMATION
CENTRAL VALLEY PROJECT
WEST SAN JOAQUIN DIVISION – SAN LUIS UNIT – CALIFORNIA

DRAINAGE FEATURE RE–EVALUATION FEASIBILITY STUDY

WESTLANDS WATER DISTRICT

SOUTH, CENTRAL, AND NORTH AREA PUMPING PLANTS SECTION

DESIGNED BY

REVIEWED BY

DENVER, COLORADO 2006–05–17
SHEET 2 OF 2

805–D–10402

CAD SYSTEM
CAD FILENAME
DATE AND TIME PLOTTED
PLOTTED BY

K

WESTLANDS WATER DISTRICT – TAILWATER RECOVERY PLANT DATA							
Reuse Area	Plant Location	Q/pump (gpm)	TDH (ft.)	Pipe Dia. (in.)		Motor (rpm)	Motor (rated HP)
				Inflow	Outflow		
A, B, C	TWA to TWC	900	42	N.A.	8	1750	20
D, E, F, G, H	TWD to TWH	900	42	N.A,	8	1750	20
M, N, O	TWM to TWO	900	42	N.A.	8	1750	20

Note: Total of 11 Tailwater Recovery plants are required.

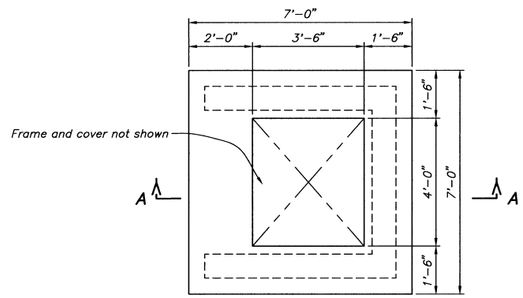

PLAN – EL. 209.75

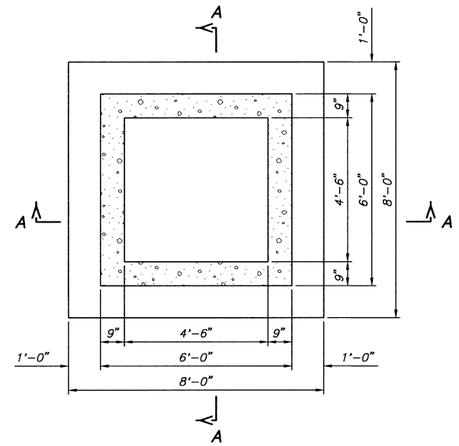

PLAN – EL. 201.00

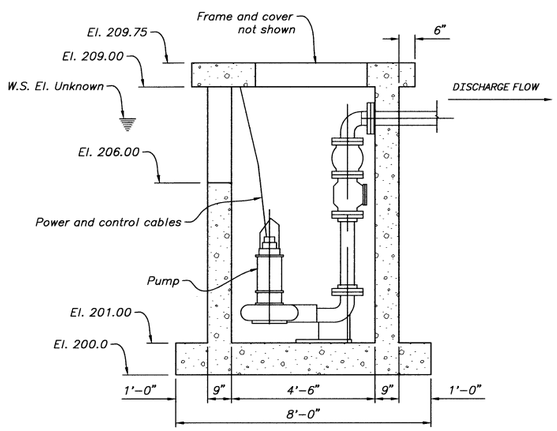

SECTION A–A

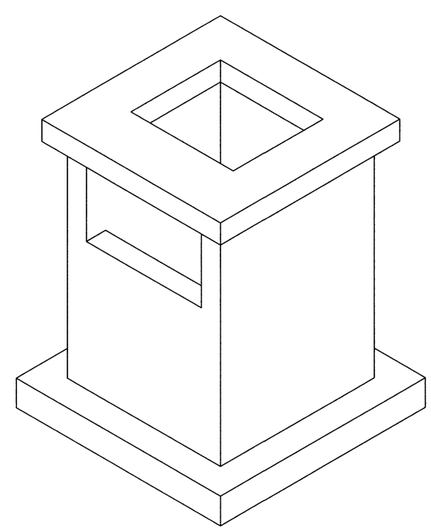

ISOMETRIC VIEW – TAILWATER RECOVERY PUMPING PLANT

NO SCALE

NOTES

1. Unwatering/dewatering is anticipated at pumping plant during excavation.

2. Elevations are relative to the bottom of the sump slab. Actual elevations will depend on reuse area site conditions and hydraulic requirements.

3. For abbreviations, see 805–D–10401.

1 0 5 10 15
SCALE OF FEET

ALWAYS THINK SAFETY

UNITED STATES
DEPARTMENT OF THE INTERIOR
BUREAU OF RECLAMATION
CENTRAL VALLEY PROJECT
WEST SAN JOAQUIN DIVISION – SAN LUIS UNIT – CALIFORNIA

DRAINAGE FEATURE RE-EVALUATION FEASIBILITY STUDY

WESTLANDS WATER DISTRICT

TAILWATER RECOVERY PUMPING PLANTS PLANS, SECTION, AND ISOMETRIC VIEW

DESIGNED BY

REVIEWED BY

DENVER, COLORADO 2006–05–17
SHEET 1 OF 1

805–D–10403

CAD SYSTEM
CAD FILENAME
DATE AND TIME PLOTTED
PLOTTED BY

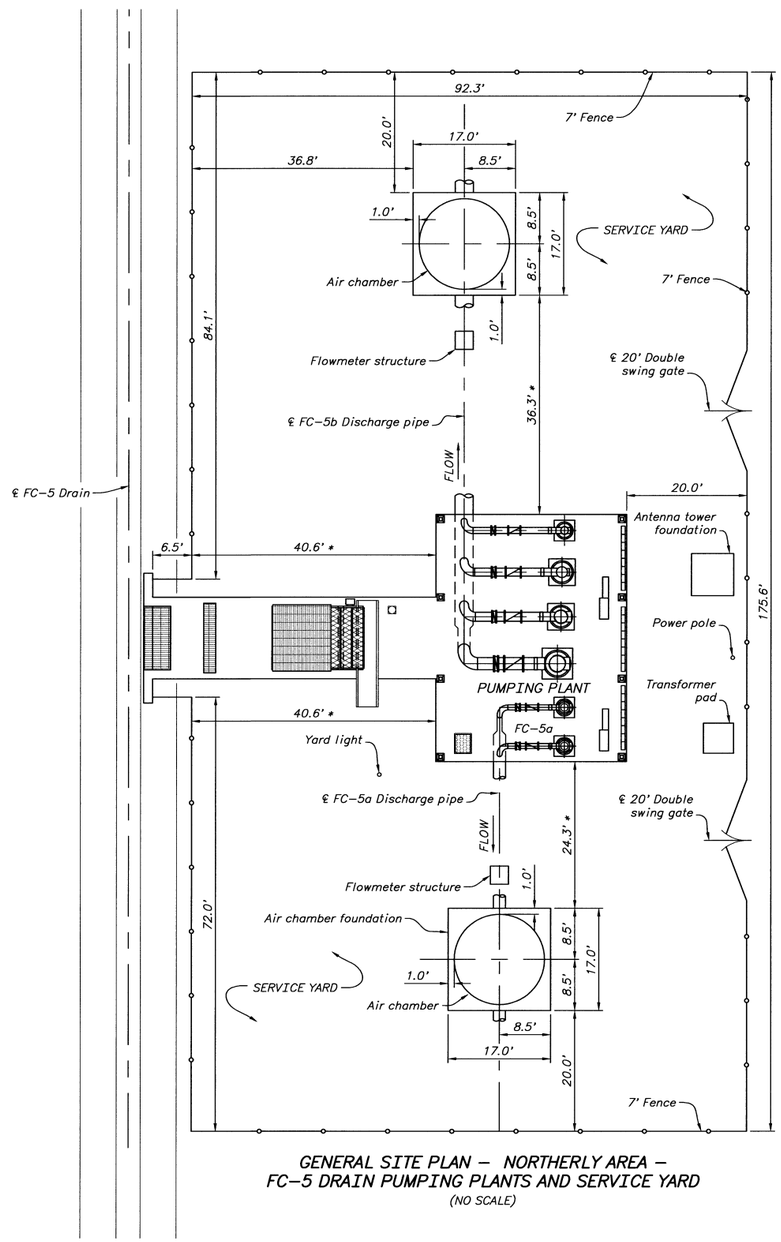

GENERAL SITE PLAN – NORTHERLY AREA –
FC-5 DRAIN PUMPING PLANTS AND SERVICE YARD
(NO SCALE)

PANOCHE DRAINAGE DISTRICT – NORTHERLY AREA – PLANT DATA											
Pumping Plant	Unit Number	Q/pump (gpm)	TDH (ft.)	D (in.)	Ground Elev. (ft.)	Sump Floor Elev. (ft.)	Min. W.S. Elev. (ft.)	Pipe Dia. (in.)		Air chamber (Dia. x H)	Motor (HP)
								Unit	Discharge		
FC-5a	1	1,560	79	13	136.5	121.00	130.0	10	24	15 X 15	50
	2	1,560	79	13	136.5	121.00	130.0	10	24		50
FC-5b	1	12,960	60	32	136.5	121.00	130.0	24	36	15 X 15	250
	2	7,700	32	23	136.5	121.00	130.0	18	36		100
	3	4,600	24	20	136.5	121.00	130.0	16	36		40
	4	2,700	20	14	136.5	121.00	130.0	12	36		20

NOTES

1. Topography at pumping plant site is not available. A site ground elevation was estimated based on available information.

2. No subsurface geologic exploration was performed at the pumping plant site. The area soil is generally classified as mostly silty clays. The largest particle size expected is sand.

3. Existing open ditch drain is assumed to be empty during plant construction.

4. Unwatering/dewatering is anticipated at pumping plant during excavation. The existing ground water surface is assumed to be 8 feet below existing ground surface. The ground water surface during system operation is assumed to rise to 3 feet below the existing ground surface.

5. * These dimensions vary depending on the size and configuration of the equipment required.

6. For abbreviations, see 805-D-10401.

ALWAYS THINK SAFETY

UNITED STATES
DEPARTMENT OF THE INTERIOR
BUREAU OF RECLAMATION
CENTRAL VALLEY PROJECT
WEST SAN JOAQUIN DIVISION – SAN LUIS UNIT – CALIFORNIA

DRAINAGE FEATURE RE-EVALUATION FEASIBILITY STUDY

NORTHERLY AREA

FC-5 DRAIN PUMPING PLANTS GENERAL SITE PLAN

DESIGNED BY

REVIEWED BY M.R. Oldham, P.E.

DENVER, COLORADO 2006-05-17
SHEET 1 OF 2

805-D-10404

CAD SYSTEM
CAD FILENAME
DATE AND TIME PLOTTED
PLOTTED BY

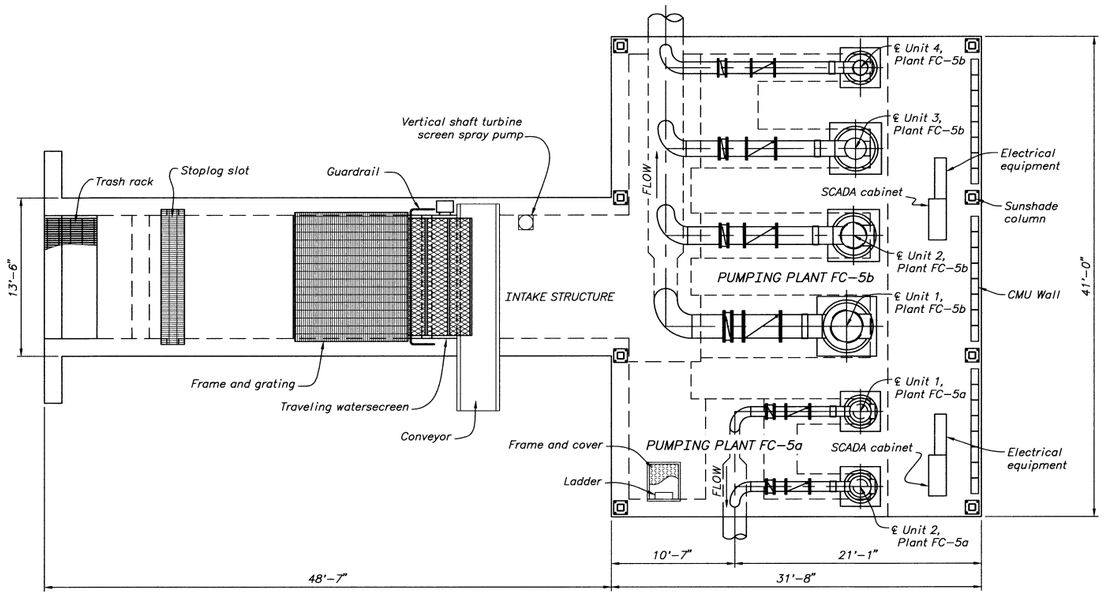

PLAN – MOTOR DECK – NORTHERLY AREA – FC-5 DRAIN PUMPING PLANTS

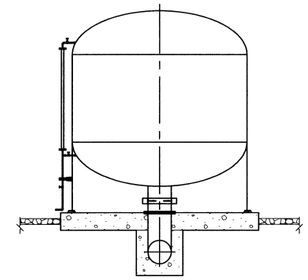

SECTION THROUGH AIR CHAMBER
(15'-0" DIA. SHOWN)

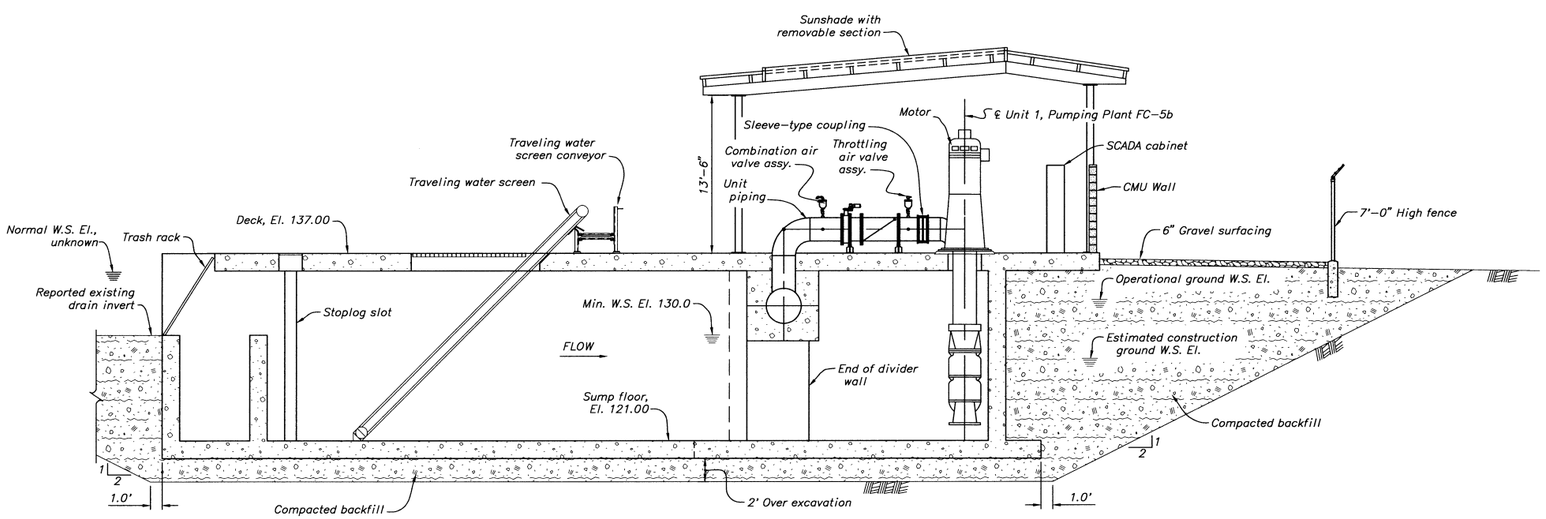

SECTION THROUGH PLANT – NORTHERLY AREA – FC-5 DRAIN PUMPING PLANTS AND INTAKE STRUCTURE

NOTES

1. For Notes, see 805-D-10404.

1 0 5 10 15
SCALE OF FEET

ALWAYS THINK SAFETY

UNITED STATES
DEPARTMENT OF THE INTERIOR
BUREAU OF RECLAMATION
CENTRAL VALLEY PROJECT
WEST SAN JOAQUIN DIVISION – SAN LUIS UNIT – CALIFORNIA

DRAINAGE FEATURE RE-EVALUATION FEASIBILITY STUDY

NORTHERLY AREA

FC-5 DRAIN PUMPING PLANTS PLAN AND SECTIONS

DESIGNED BY

REVIEWED BY

DENVER, COLORADO 2006-05-17
SHEET 1 OF 2

805-D-10405

CAD SYSTEM
CAD FILENAME
DATE AND TIME PLOTTED
PLOTTED BY

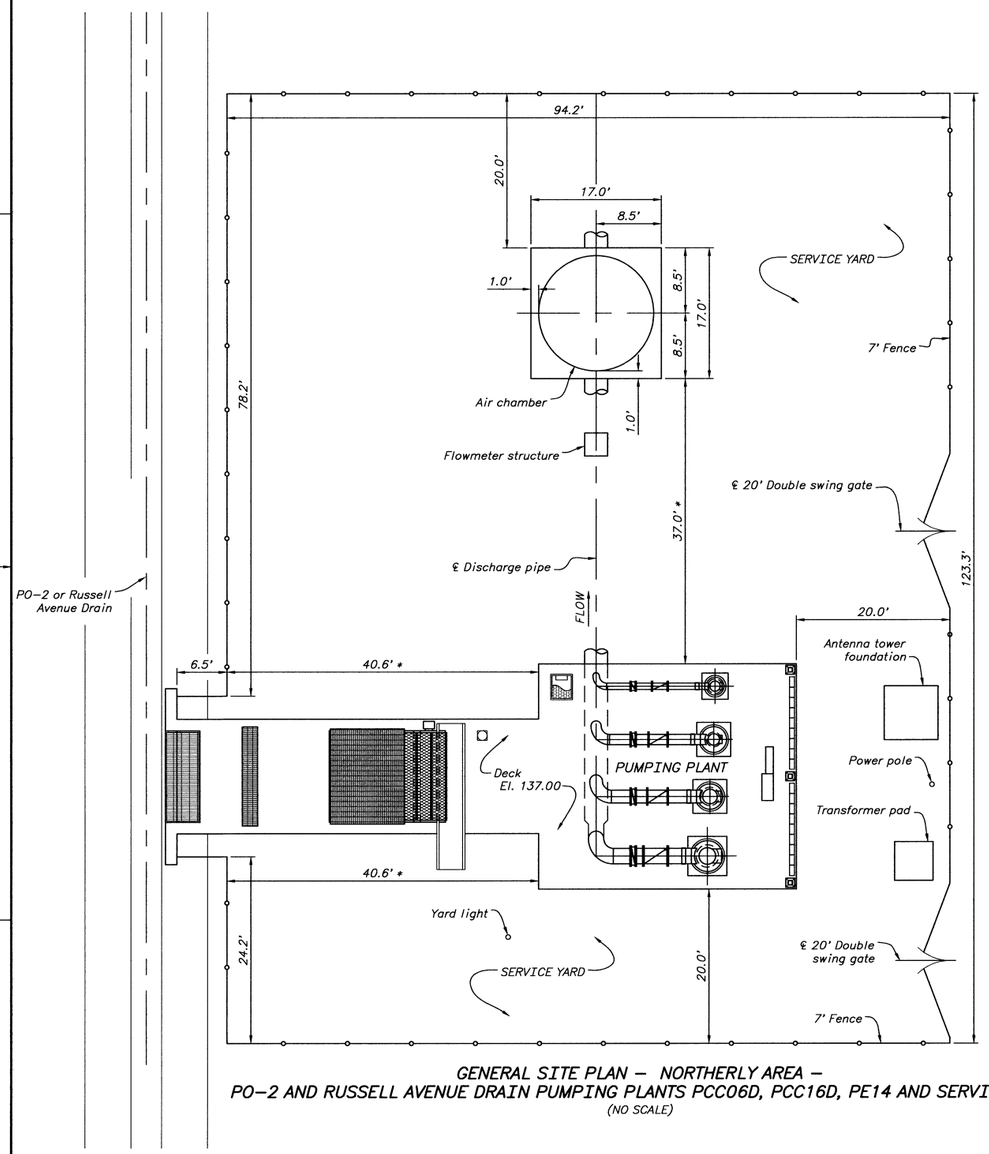

GENERAL SITE PLAN – NORTHERLY AREA –
PO-2 AND RUSSELL AVENUE DRAIN PUMPING PLANTS PCC06D, PCC16D, PE14 AND SERVICE YARD
(NO SCALE)

PANOCHE DRAINAGE DISTRICT – NORTHERLY AREA – PLANT DATA											
Pumping Plant	Unit Number	Q/pump (gpm)	TDH (ft.)	D (in.)	Ground Elev. (ft.)	Sump Floor Elev. (ft.)	Min. W.S. Elev. (ft.)	Pipe Dia. (in.)		Air chamber (Dia. x H)	Motor (BHP)
								Unit	Discharge		
PCC06D	1	12,390	33	33	149.0	134.00	142.0	24	36	15 X 15	125
	2	7,400	16	27	149.0	134.00	142.0	20	36		40
	3	4,400	9	21	149.0	134.00	142.0	16	36		15
	4	2,300	7	17	149.0	134.00	142.0	10	36		7.5
PCC16D	1	12,390	33	33	149.0	134.00	142.0	24	36	15 X 15	125
	2	7,400	16	27	149.0	134.00	142.0	20	36		40
	3	4,400	9	21	149.0	134.00	142.0	16	36		15
	4	2,300	7	17	149.0	134.00	142.0	10	36		7.5
PE14	1	12,390	33	33	149.0	134.00	142.0	24	24	none	125
	2	7,400	16	27	149.0	134.00	142.0	20	24		40
	3	4,400	9	21	149.0	134.00	142.0	16	24		15
	4	2,300	7	17	149.0	134.00	142.0	10	24		7.5

NOTES

1. Topography at pumping plant site is not available. A site ground elevation was estimated based on available information.

2. No subsurface geologic exploration was performed at the pumping plant site. The area soil is generally classified as mostly silty clays. The largest particle size expected is sand.

3. Existing open ditch drain is assumed to be empty during plant construction.

4. Unwatering/dewatering is anticipated at pumping plant during excavation. The existing ground water surface is assumed to be 8 feet below existing ground surface. The ground water surface during system operation is assumed to rise to 3 feet below the existing ground surface.

5. * These dimensions vary depending on the size and configuration of the equipment required.

6. For abbreviations, see 805-D-10401.

ALWAYS THINK SAFETY

UNITED STATES
DEPARTMENT OF THE INTERIOR
BUREAU OF RECLAMATION
CENTRAL VALLEY PROJECT
WEST SAN JOAQUIN DIVISION – SAN LUIS UNIT – CALIFORNIA

DRAINAGE FEATURE RE-EVALUATION FEASIBILITY STUDY

NORTHERLY AREA

PO-2 AND RUSSELL AVENUE DRAIN PUMPING PLANTS GENERAL SITE PLAN

DESIGNED BY _____

REVIEWED BY _____

DENVER, COLORADO 2006-05-17
SHEET 1 OF 2

805-D-10406

CAD SYSTEM
CAD FILENAME
DATE AND TIME PLOTTED
PLOTTED BY

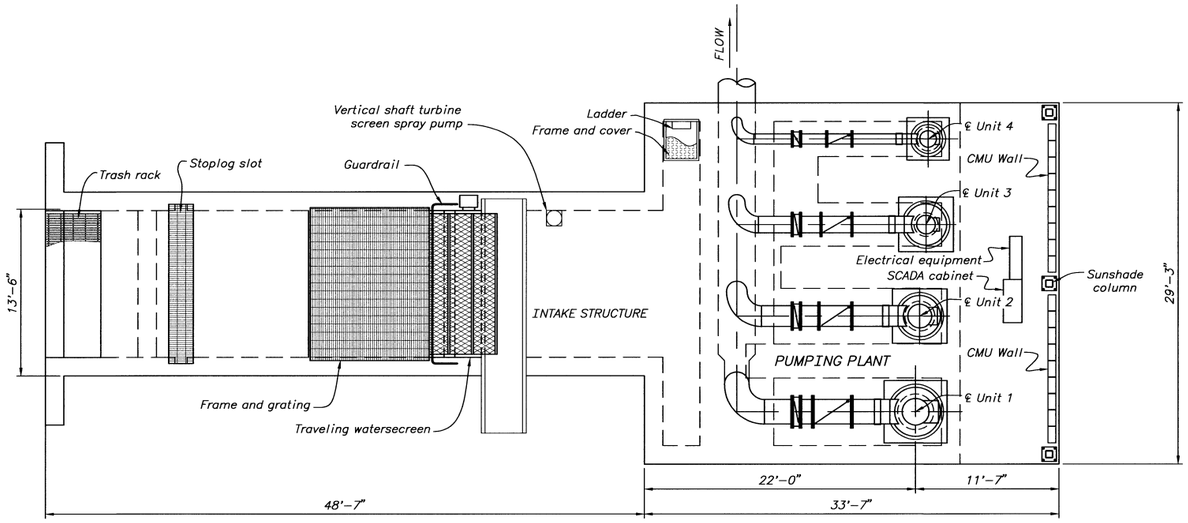

PLAN – MOTOR DECK – NORTHERLY AREA –
PO-2 AND RUSSELL AVENUE DRAIN PUMPING PLANTS PCC06D, PCC16D, PE14

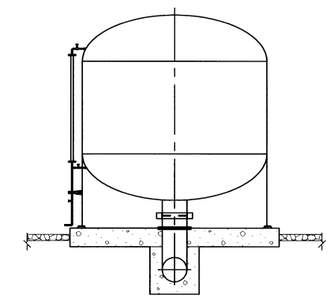

SECTION THROUGH AIR CHAMBER
(15'-0" DIA. SHOWN)

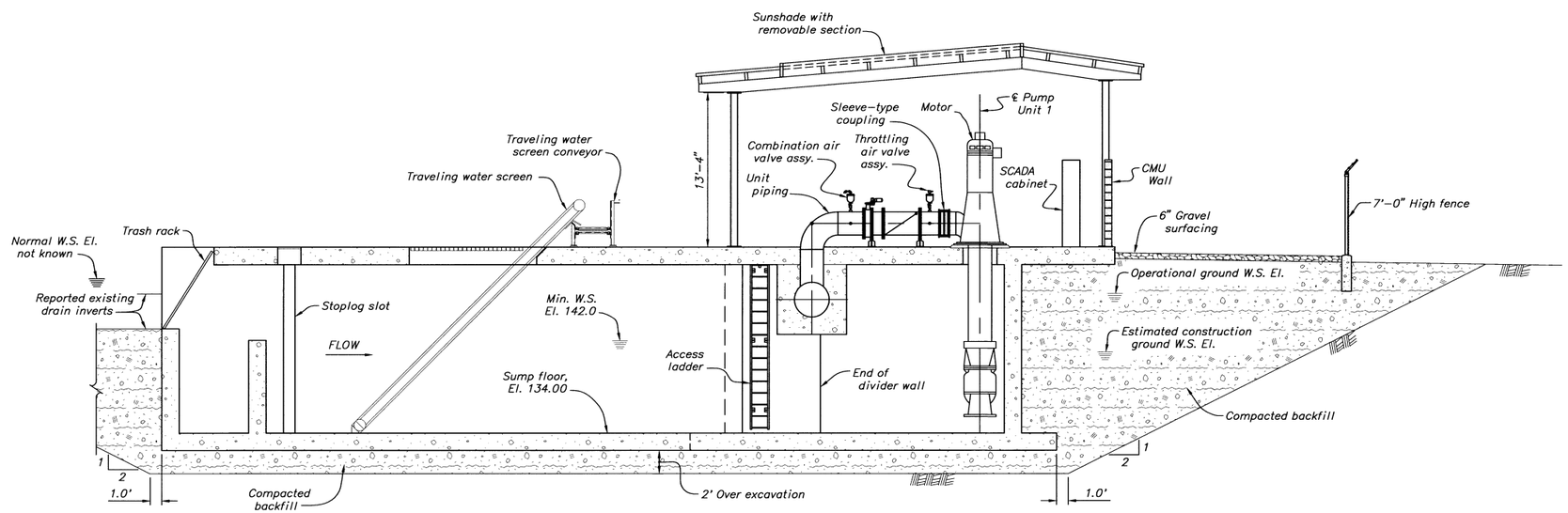

SECTION THROUGH PLANT – NORTHERLY AREA –
PO-2 AND RUSSELL AVENUE DRAIN PUMPING PLANTS PCC06D, PCC16D, PE14 AND SERVICE YARD

NOTES

1. For Notes, see 805-D-10406.

1 0 5 10 15
SCALE OF FEET

ALWAYS THINK SAFETY

UNITED STATES
DEPARTMENT OF THE INTERIOR
BUREAU OF RECLAMATION
CENTRAL VALLEY PROJECT
WEST SAN JOAQUIN DIVISION – SAN LUIS UNIT – CALIFORNIA

DRAINAGE FEATURE RE-EVALUATION FEASIBILITY STUDY

NORTHERLY AREA

PO-2 AND RUSSELL AVENUE DRAIN PUMPING PLANTS PLAN AND SECTIONS

DESIGNED BY
REVIEWED BY

DENVER, COLORADO 2006-05-17
SHEET 2 OF 2

805-D-10407

CAD SYSTEM
CAD FILENAME
DATE AND TIME PLOTTED
PLOTTED BY

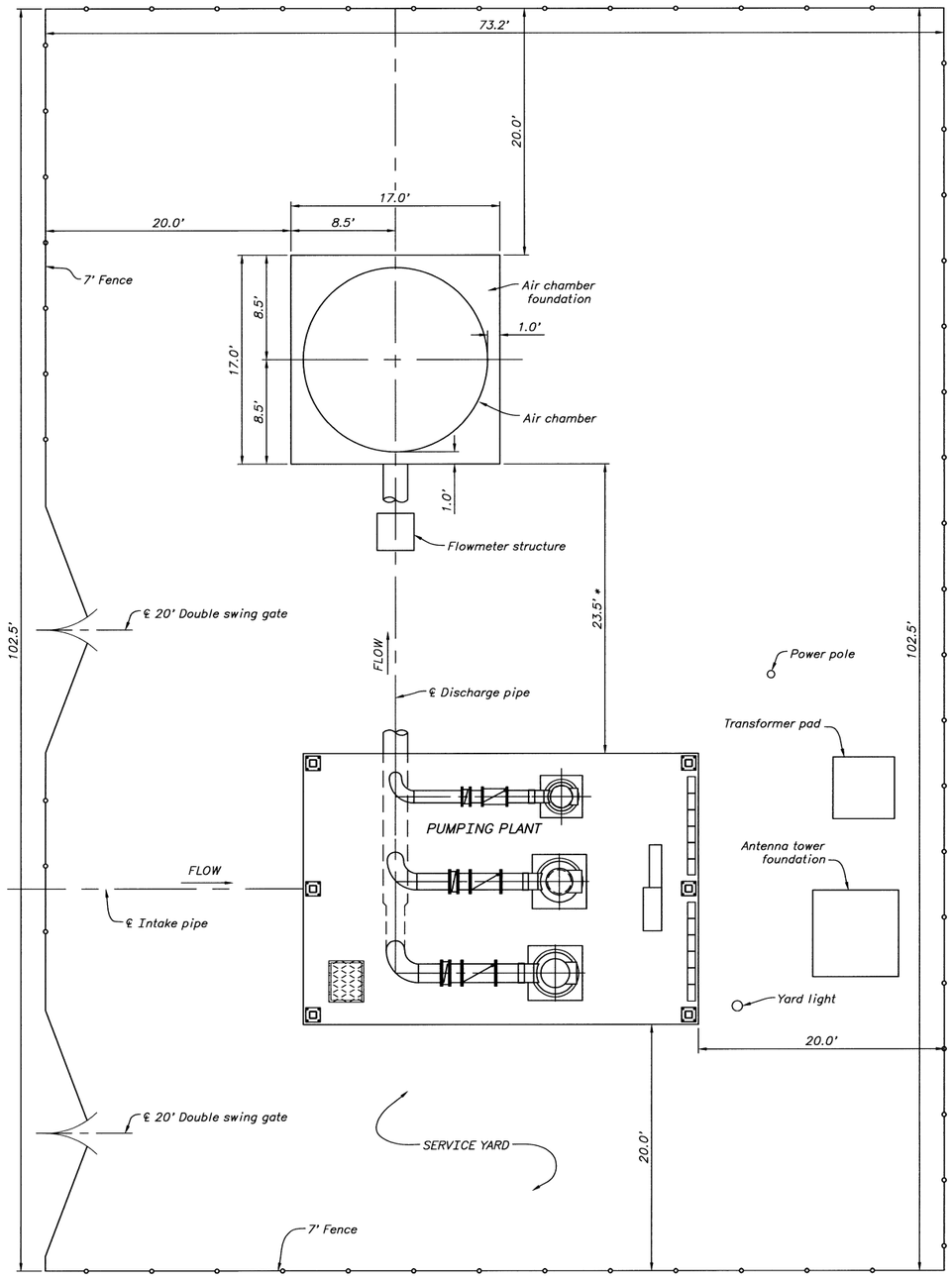

GENERAL SITE PLAN – NORTHERLY AREA –
WCC02A, WCC03B, WCC01C, WCC11D FIELD DRAIN PUMPING PLANT AND SERVICE YARD
(NO SCALE)

PANOCHE DRAINAGE DISTRICT – NORTHERLY AREA – PLANT DATA											
Pumping Plant	Unit Number	Q/pump (gpm)	TDH (ft.)	D (in.)	Ground Elev. (ft.)	Sump Floor Elev. (ft.)	Min. W.S. Elev. (ft.)	Pipe Dia. (in.)		Air chamber (Dia. x H)	Motor (BHP)
								Unit	Discharge		
WCC02A	1	6,175	86	26	148.0	129.00	136.0	18	22	15 X 15	200
	2	3,700	64	21	148.0	129.00	136.0	16	22		75
	3	2,200	55	18	148.0	129.00	136.0	12	22		20
WCC03B	1	6,175	86	26	148.0	129.00	136.0	18	24	15 X 15	200
	2	3,700	64	21	148.0	129.00	136.0	16	24		75
	3	2,200	55	18	148.0	129.00	136.0	12	24		20
WCC01C	1	6,175	86	26	148.0	129.00	136.0	18	32	15 X 15	200
	2	3,700	64	21	148.0	129.00	136.0	16	32		75
	3	2,200	55	18	148.0	129.00	136.0	12	32		20
WCC11D	1	6,175	86	26	148.0	129.00	136.0	18	22	15 X 15	200
	2	3,700	64	21	148.0	129.00	136.0	16	22		75
	3	2,200	55	18	148.0	129.00	136.0	12	22		20

NOTES

1. Topography at pumping plant site is not available. A site ground elevation was estimated based on available information.

2. No subsurface geologic exploration was performed at the pumping plant site. The area soil is generally classified as mostly silty clays. The largest particle size expected is sand.

3. Unwatering/dewatering is anticipated at pumping plant during excavation. The existing ground water surface is assumed to be 8 feet below existing ground surface. The ground water surface during system operation is assumed to rise to 3 feet below the existing ground surface.

4. * These dimensions vary depending on the size and configuration of the equipment required.

5. For abbreviations, see 805–D–10401.

ALWAYS THINK SAFETY

UNITED STATES
DEPARTMENT OF THE INTERIOR
BUREAU OF RECLAMATION
CENTRAL VALLEY PROJECT
WEST SAN JOAQUIN DIVISION – SAN LUIS UNIT – CALIFORNIA

DRAINAGE FEATURE RE–EVALUATION FEASIBILITY STUDY

NORTHERLY AREA

THREE–PUMP FIELD DRAIN PUMPING PLANTS GENERAL SITE PLAN

DESIGNED BY

REVIEWED BY M.R.O. Shaw, P.E.

DENVER, COLORADO 2006–05–17 SHEET 1 OF 2

805–D–10408

CAD SYSTEM
CAD FILENAME
DATE AND TIME PLOTTED
PLOTTED BY

K

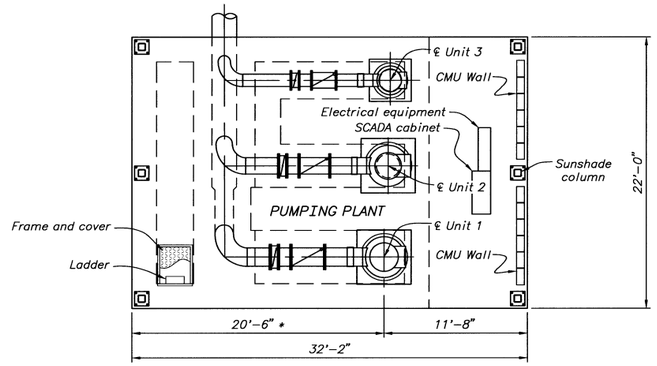

PLAN – MOTOR DECK – NORTHERLY AREA –
WCC02A, WCC03B, WCC01C, WCC11D FIELD DRAIN PUMPING PLANTS

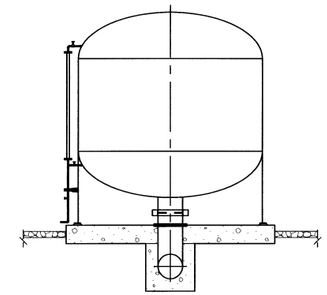

SECTION THROUGH AIR CHAMBER
(15'–0" DIA. SHOWN)

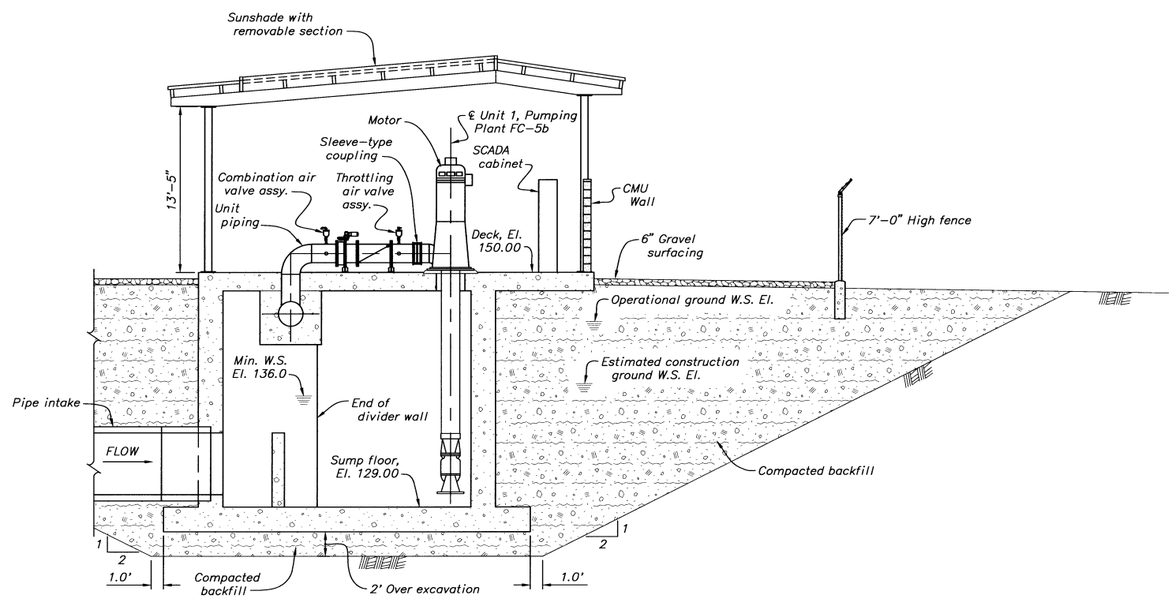

SECTION THROUGH PLANT – NORTHERLY AREA –
WCC02A, WCC03B, WCC01C, WCC11D FIELD DRAIN PUMPING PLANT AND INTAKE STRUCTURE

NOTES

1. For Notes, see 805–D–10408.

1 0 5 10 15
SCALE OF FEET

ALWAYS THINK SAFETY

UNITED STATES
DEPARTMENT OF THE INTERIOR
BUREAU OF RECLAMATION
CENTRAL VALLEY PROJECT
WEST SAN JOAQUIN DIVISION – SAN LUIS UNIT – CALIFORNIA

DRAINAGE FEATURE RE–EVALUATION FEASIBILITY STUDY
NORTHERLY AREA
THREE–PUMP FIELD DRAIN PUMPING PLANTS PLAN AND SECTIONS

DESIGNED BY
REVIEWED BY M.R. Dixon, P.E.

DENVER, COLORADO 2006–05–17
SHEET 1 OF 2
805–D–10409

CAD SYSTEM
CAD FILENAME
DATE AND TIME PLOTTED
PLOTTED BY

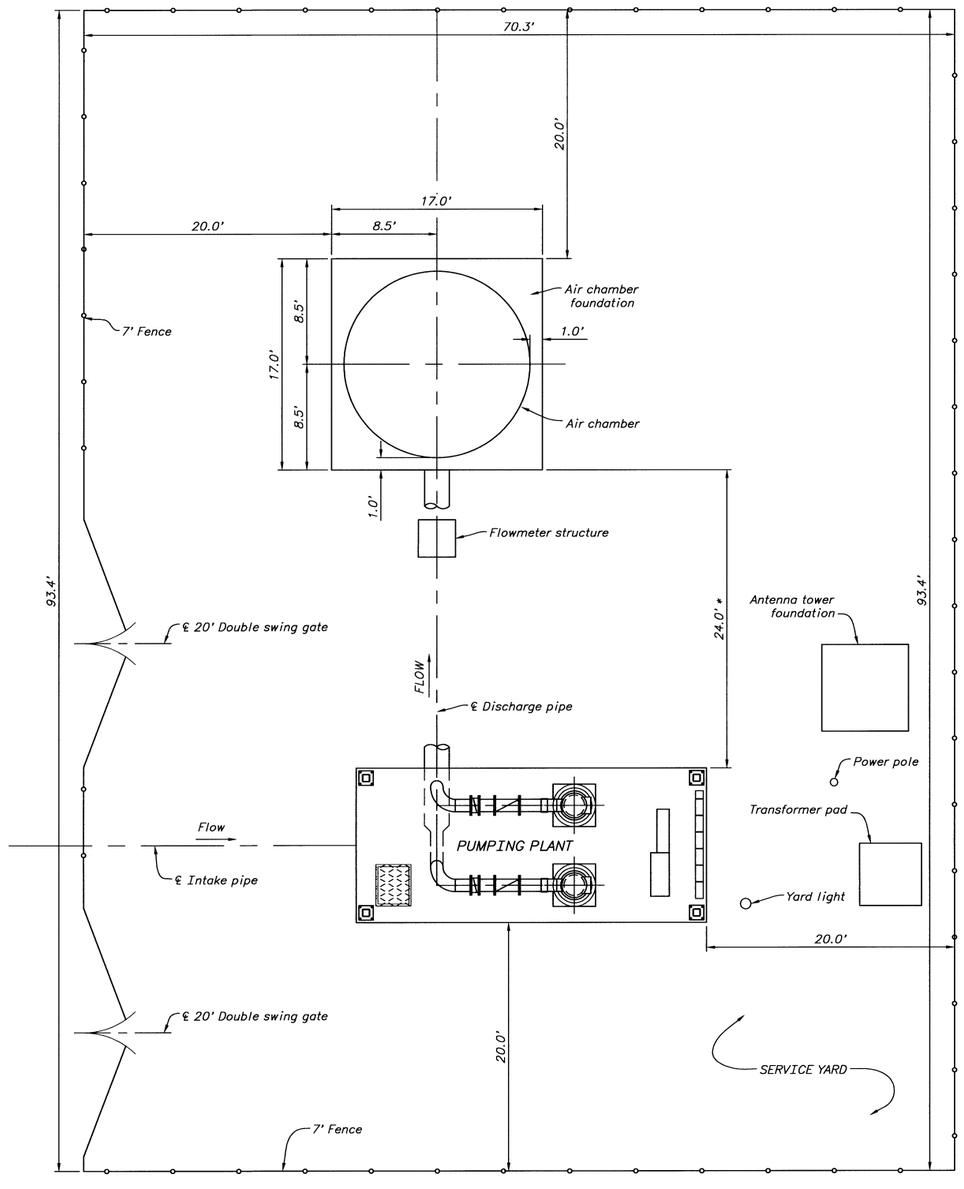

GENERAL SITE PLAN – NORTHERLY AREA –
WCC03A, WCC09A, WCC10B, WCC06D FIELD DRAIN PUMPING PLANT AND SERVICE YARD
(NO SCALE)

PANOCHE DRAINAGE DISTRICT – NORTHERLY AREA – PLANT DATA											
Pumping Plant	Unit Number	Q/pump (gpm)	TDH (ft.)	D (in.)	Ground Elev. (ft.)	Sump Floor Elev. (ft.)	Min. W.S. Elev. (ft.)	Pipe Dia. (in.)		Air chamber (Dia. x H)	Motor (BHP)
								Unit	Discharge		
WCC03A	1	2,100	131	18	149.0	132.00	136.0	12	20	15 X 15	10
	2	2,100	131	18	149.0	132.00	136.0	12	20		10
WCC09A	1	2,100	131	18	149.0	132.00	136.0	12	14	15 X 15	10
	2	2,100	131	18	149.0	132.00	136.0	12	14		10
WCC10B	1	2,100	131	18	149.0	132.00	136.0	12	14	15 X 15	10
	2	2,100	131	18	149.0	132.00	136.0	12	14		10
WCC06D	1	2,100	131	18	149.0	132.00	136.0	12	32	15 X 15	10
	2	2,100	131	18	149.0	132.00	136.0	12	32		10

NOTES

1. Topography at pumping plant site is not available. A site ground elevation was estimated based on available information.

2. No subsurface geologic exploration was performed at the pumping plant site. The area soil is generally classified as mostly silty clays. The largest particle size expected is sand.

3. Unwatering/dewatering is anticipated at pumping plant during excavation. The existing ground water surface is assumed to be 8 feet below existing ground surface. The ground water surface during system operation is assumed to rise to 3 feet below the existing ground surface.

4. * These dimensions vary depending on the size and configuration of the equipment required.

5. For abbreviations, see 805-D-10401.

ALWAYS THINK SAFETY

UNITED STATES
DEPARTMENT OF THE INTERIOR
BUREAU OF RECLAMATION
CENTRAL VALLEY PROJECT
WEST SAN JOAQUIN DIVISION – SAN LUIS UNIT – CALIFORNIA

DRAINAGE FEATURE RE-EVALUATION FEASIBILITY STUDY

NORTHERLY AREA

TWO-PUMP FIELD DRAIN PUMPING PLANTS GENERAL SITE PLAN

DESIGNED BY

REVIEWED BY

DENVER, COLORADO 2006-05-17
SHEET 1 OF 2

805-D-10410

CAD SYSTEM
CAD FILENAME
DATE AND TIME PLOTTED
PLOTTED BY

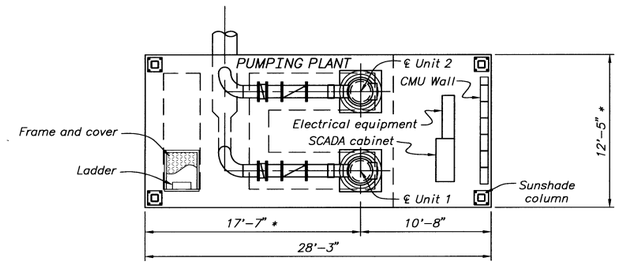

PLAN – MOTOR DECK – NORTHERLY AREA –
WCC03A, WCC09A, WCC10B, WCC06D TILE DRAIN PUMPING PLANTS

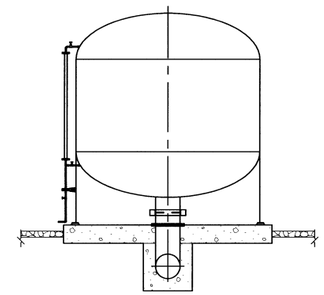

SECTION THORUGH AIR CHAMBER
(15'-0" DIA. SHOWN)

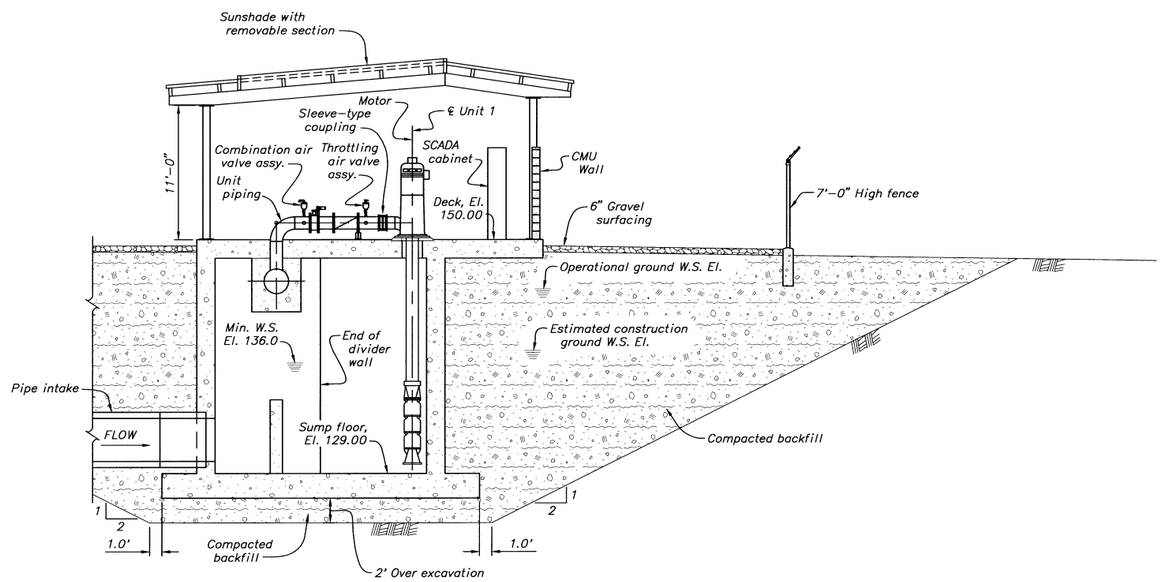

SECTION THROUGH PLANT – NORTHERLY AREA –
WCC03A, WCC09A, WCC10B, WCC06D TILE DRAIN PUMPING PLANTS AND INTAKE STRUCTURE

NOTES

1. For Notes, see 805-D-10410.

1 0 5 10 15
SCALE OF FEET

ALWAYS THINK SAFETY

UNITED STATES
DEPARTMENT OF THE INTERIOR
BUREAU OF RECLAMATION
CENTRAL VALLEY PROJECT
WEST SAN JOAQUIN DIVISION – SAN LUIS UNIT – CALIFORNIA

DRAINAGE FEATURE RE-EVALUATION FEASIBILITY STUDY

NORTHERLY AREA

TWO-PUMP FIELD DRAIN PUMPING PLANTS PLAN AND SECTIONS

DESIGNED BY
REVIEWED BY

DENVER, COLORADO 2006-05-17
SHEET 2 OF 2

805-D-10411

CAD SYSTEM
CAD FILENAME
DATE AND TIME PLOTTED
PLOTTED BY

WESTLANDS WATER DISTRICT – REGULATING TANK DATA					
Reuse Areas	Pumping Plants	Tank Dimensions (ft)		No. of Piles (each)	"X" (ft)
		Height	I.D.		
A, B, C	A, B, C	15	21	8	30.5
D, E, F, G, H	D, E, F, G, H	15	26	13	33.0
M, N, O	M, N, O	15	16	5	28.0

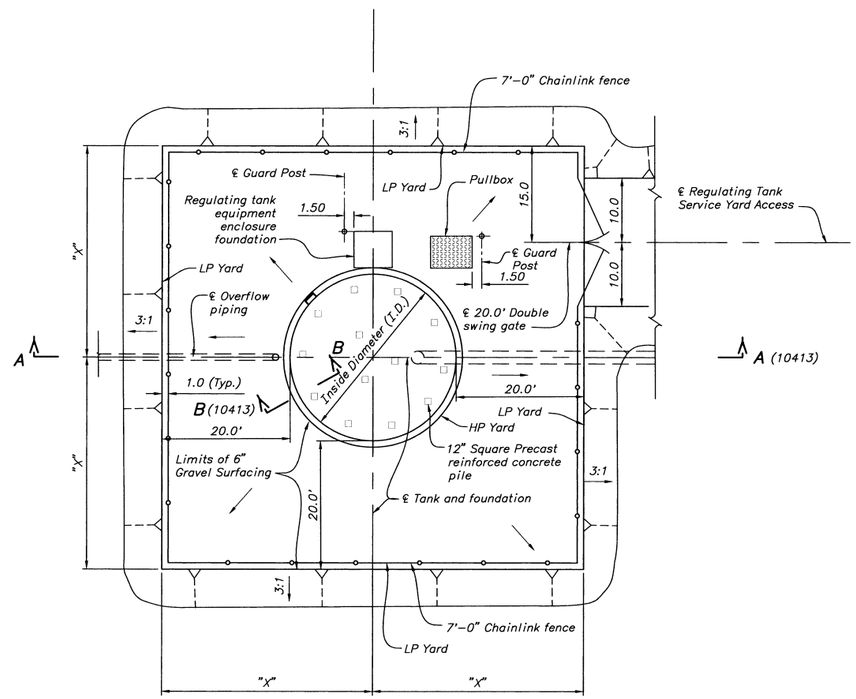

WESTLANDS WATER DISTRICT REGULATING TANK SERVICE YARD SITE PLAN

NOTES

1. Unwatering/dewatering is not anticipated at regulating tank sites.

2. The tank foundation is modeled after Zenon Corporations foundations at the treatment plant.

10 0 10 20 30
SCALE OF FEET

ALWAYS THINK SAFETY

UNITED STATES
DEPARTMENT OF THE INTERIOR
BUREAU OF RECLAMATION
CENTRAL VALLEY PROJECT
WEST SAN JOAQUIN DIVISION – SAN LUIS UNIT – CALIFORNIA

DRAINAGE FEATURE RE-EVALUATION FEASIBILITY STUDY

WESTLANDS WATER DISTRICT

REGULATING TANKS SITE PLAN

DESIGNED BY
REVIEWED BY M.R.O. Shea, P.E.

DENVER, COLORADO 2006-05-17
SHEET 1 OF 2

805-D-10412

CAD SYSTEM
CAD FILENAME
DATE AND TIME PLOTTED
PLOTTED BY

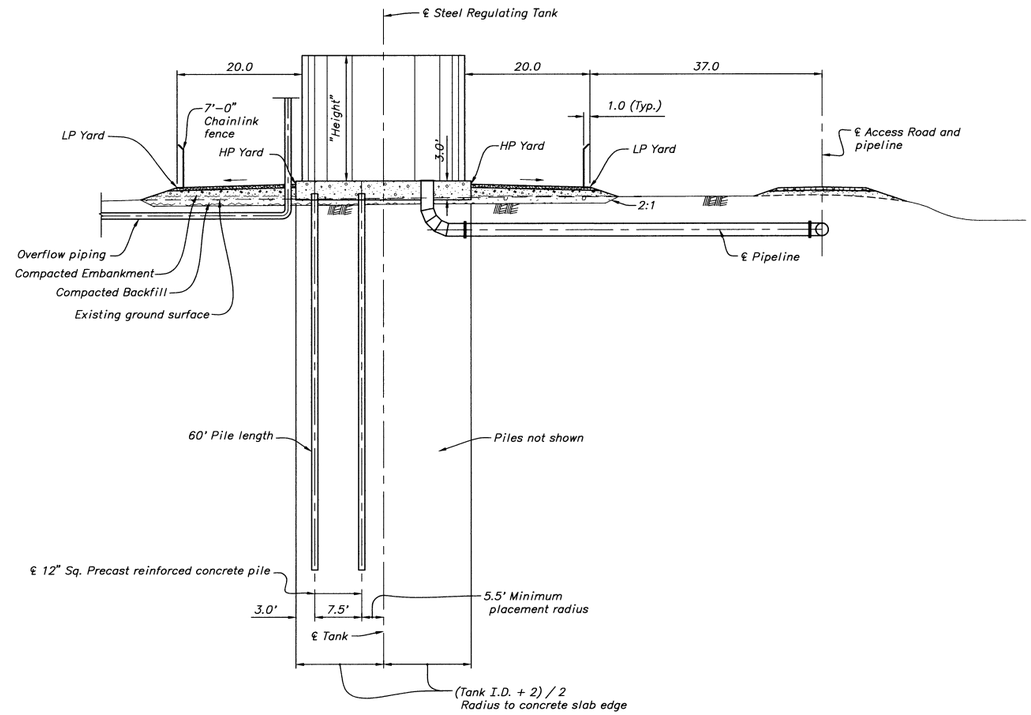

SECTION A-A (10412)

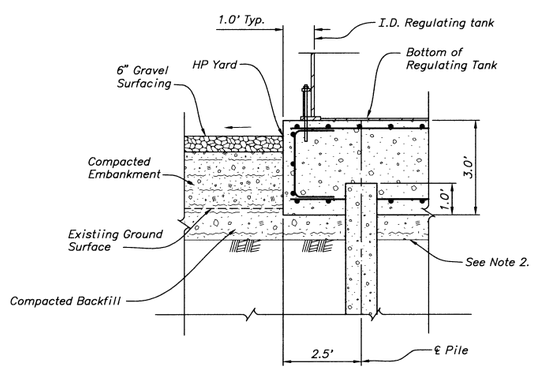

SECTION B-B (10412)

NOTES

1. For Notes, see 805-D-10412.
2. Strip site 1' below existing ground surface. Compacted embankment to bottom of slab. Drive piles and construct slab. Finish yard with compacted embankment and gravel surfacing.
3. For tank diameters (I.D.), see 805-D-10412.

10 0 10 20 30
SCALE OF FEET

ALWAYS THINK SAFETY

UNITED STATES
DEPARTMENT OF THE INTERIOR
BUREAU OF RECLAMATION
CENTRAL VALLEY PROJECT
WEST SAN JOAQUIN DIVISION - SAN LUIS UNIT - CALIFORNIA

DRAINAGE FEATURE RE-EVALUATION
FEASIBILITY STUDY
WESTLANDS WATER DISTRICT
REGULATING TANKS
SECTIONS

DESIGNED BY
REVIEWED BY

DENVER, COLORADO
SHEET 2 OF 2
2006-05-17
805-D-10413

CAD SYSTEM
CAD FILENAME
DATE AND TIME PLOTTED
PLOTTED BY

PANOCHE DRAINAGE DISTRICT – NORTHERLY AREA – REGULATING TANK DATA						
Regulating Tank No.	Reuse Areas	Pumping Plants	Tank Dimensions (ft)		No. of Piles (each)	"X" (ft)
			Height	I.D.		
1	P01, P02, P03, P06	WWC02A, WCC01C, WCC03A, WCC06D	20	60	70	50.0
2	Reuse Bypass	PE14	19	65	80	52.5
3	PE8, PE9, FC5–2, FC5–3, PE10, PE11	FC5A, WCC09A, WCC10B, WWC03B, WCC11D	19	60	70	50.0

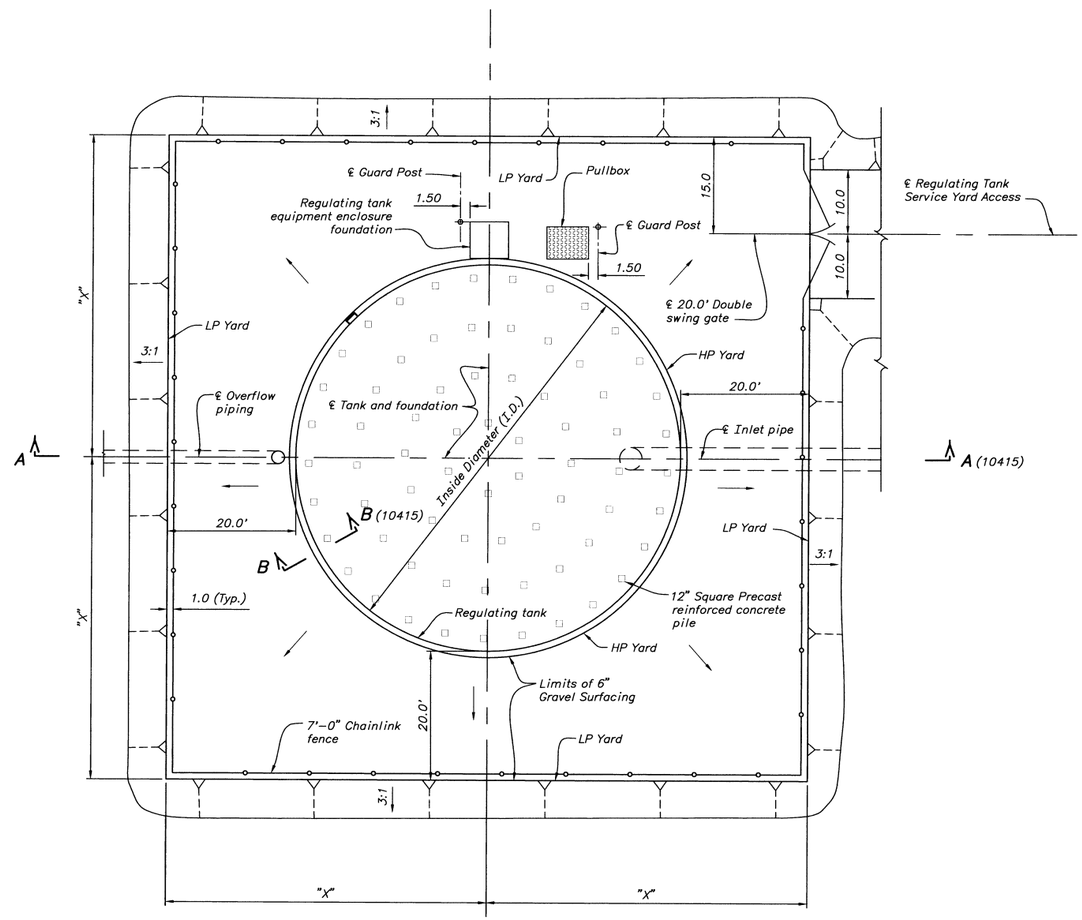

NORTHERLY AREA REGULATING TANK SERVICE YARD
SITE PLAN

NOTES

1. Unwatering/dewatering is not anticipated at regulating tank site.

2. The tank foundation is modeled after Zenon Corporations foundations at the treatment plant.

10 0 10 20 30
SCALE OF FEET

ALWAYS THINK SAFETY

UNITED STATES
DEPARTMENT OF THE INTERIOR
BUREAU OF RECLAMATION
CENTRAL VALLEY PROJECT
WEST SAN JOAQUIN DIVISION – SAN LUIS UNIT – CALIFORNIA

DRAINAGE FEATURE RE–EVALUATION
FEASIBILITY STUDY
NORTHERLY AREA
REGULATING TANKS
SITE PLAN

DESIGNED BY
REVIEWED BY M. R. Oster, P.E.

DENVER, COLORADO SHEET 1 OF 2 2006–05–17 805–D–10414

CAD SYSTEM
CAD FILENAME
DATE AND TIME PLOTTED
PLOTTED BY

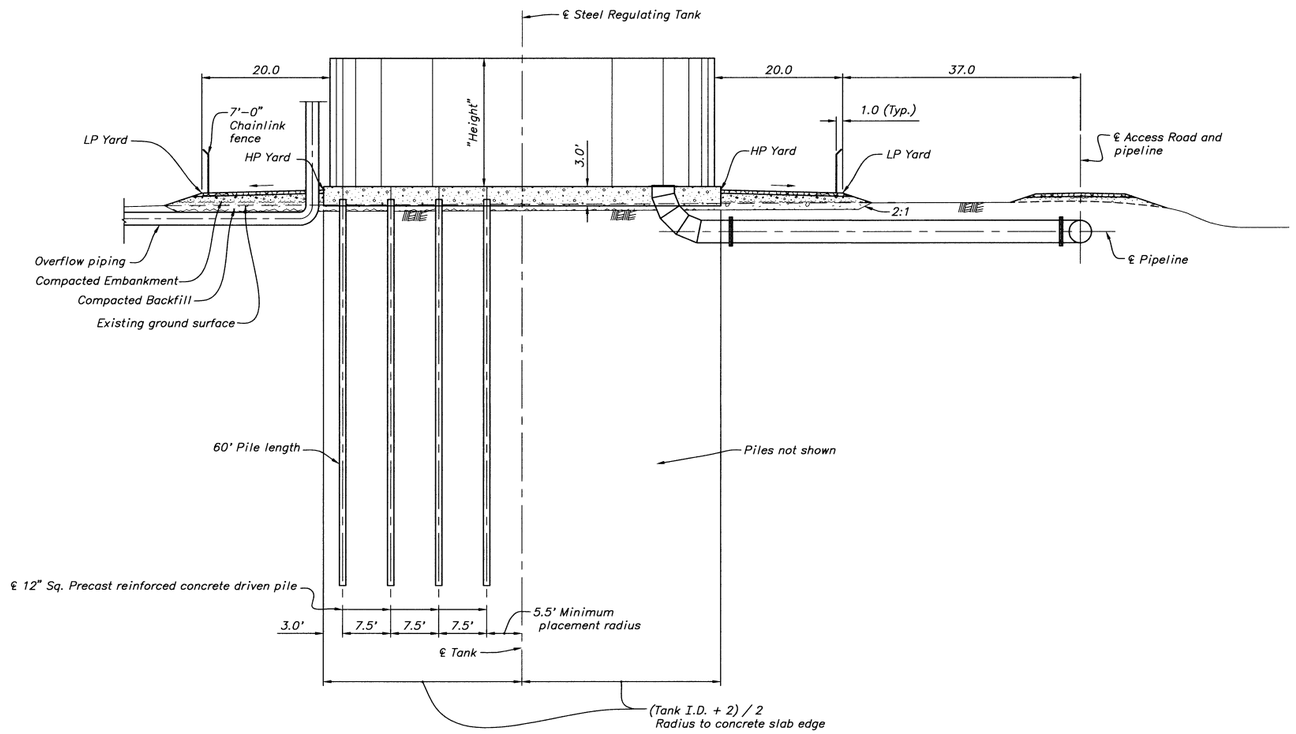

SECTION A–A (10414)

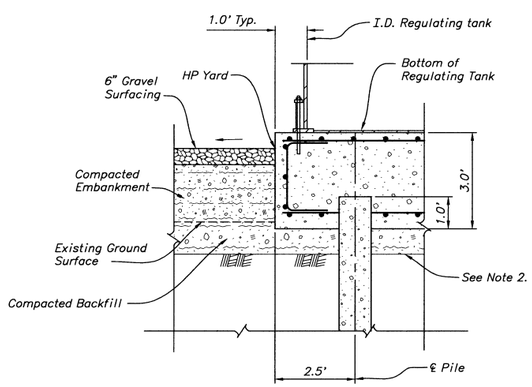

SECTION B–B (10414)

NOTES

1. For Notes, see 805–D–10414.

2. Strip site 1' below existing ground surface. Compacted embankment to bottom of slab. Drive piles and construct slab. Finish yard with compacted embankment and gravel surfacing.

1. For tank diameters (I.D.), see 805–D–10414.

10 0 10 20 30
SCALE OF FEET

ALWAYS THINK SAFETY

UNITED STATES
DEPARTMENT OF THE INTERIOR
BUREAU OF RECLAMATION
CENTRAL VALLEY PROJECT
WEST SAN JOAQUIN DIVISION – SAN LUIS UNIT – CALIFORNIA

DRAINAGE FEATURE RE–EVALUATION FEASIBILITY STUDY

NORTHERLY AREA

REGULATING TANKS SECTIONS

DESIGNED BY

REVIEWED BY

DENVER, COLORADO
SHEET 2 OF 2
2006–05–17

805–D–10415

CAD SYSTEM
CAD FILENAME
DATE AND TIME PLOTTED
PLOTTED BY

805-D-10416

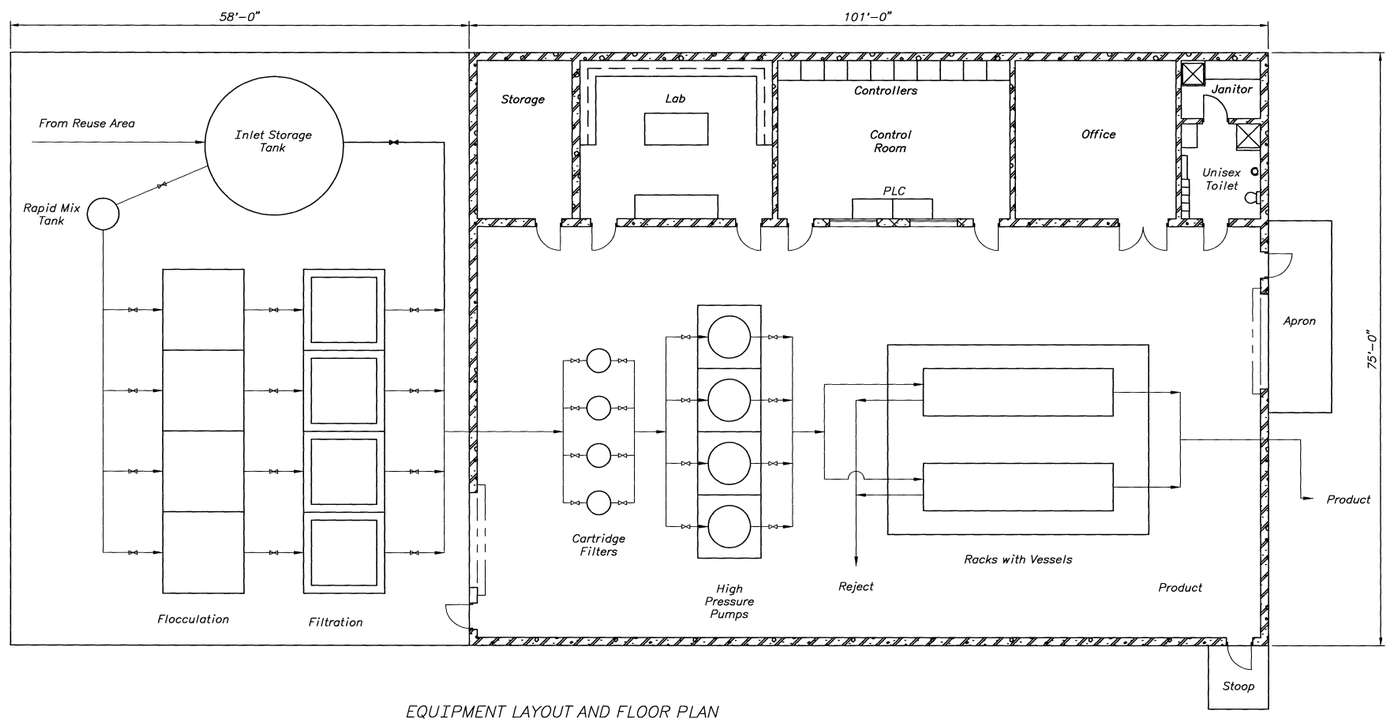

EQUIPMENT LAYOUT AND FLOOR PLAN

8 0 8 16
SCALE OF FEET

ALWAYS THINK SAFETY

UNITED STATES
DEPARTMENT OF THE INTERIOR
BUREAU OF RECLAMATION
CENTRAL VALLEY PROJECT
WEST SAN JOAQUIN DIVISION – SAN LUIS UNIT – CALIFORNIA

DRAINAGE FEATURE
RE-EVALUATION FEASIBILITY STUDY
WESTLANDS WATER DISTRICT
SOUTH REVERSE OSMOSIS PLANT LAYOUT

DESIGNED BY Frank Leitz
REVIEWED BY Scott Rahrig

CADD SYSTEM
CADD FILENAME
DENVER, COLORADO SEPTEMBER 11, 2008 SHEET 1 OF 1
805-D-10416

PLOTTED BY:

K

805-D-10417

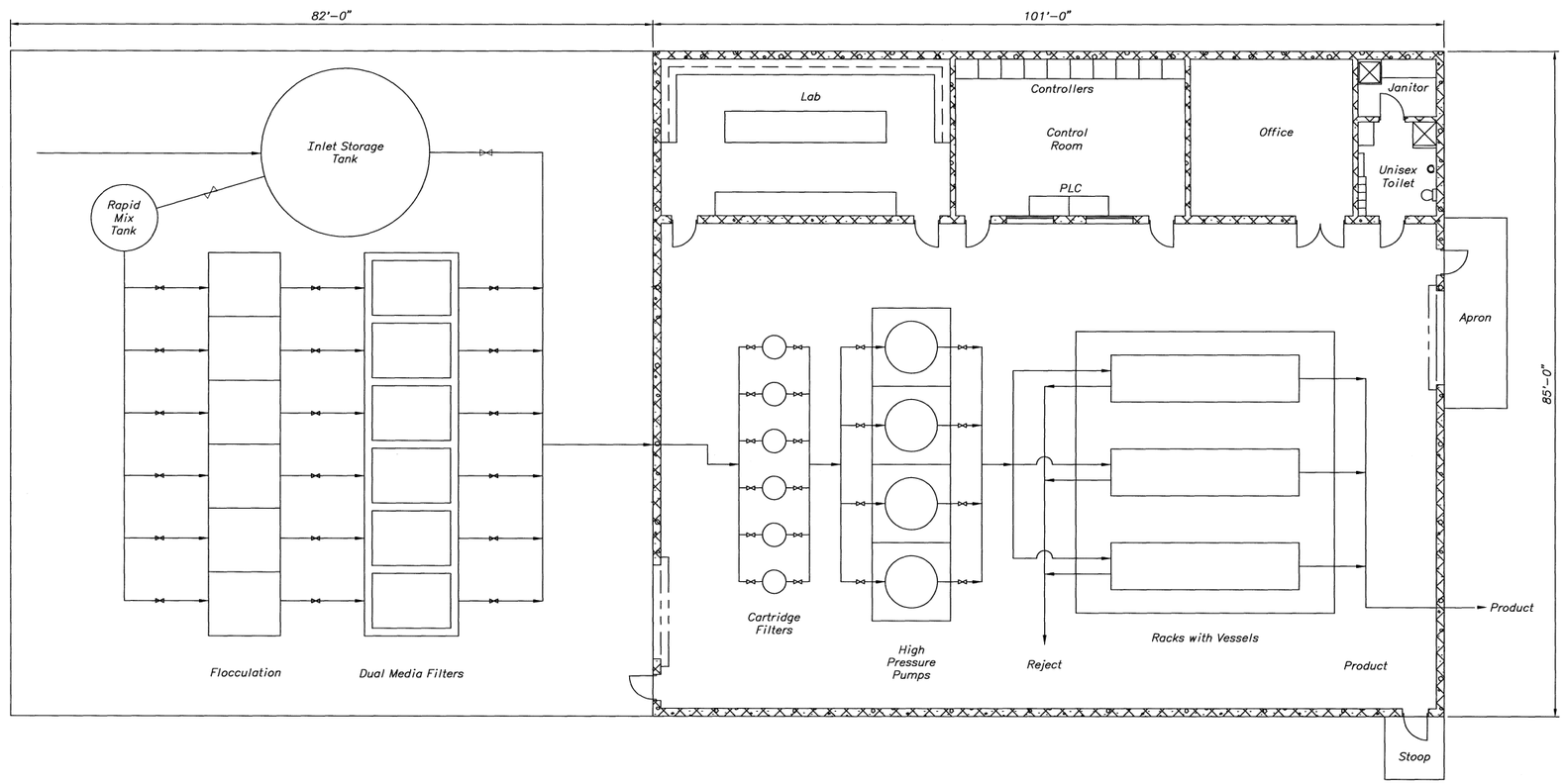

EQUIPMENT LAYOUT AND FLOOR PLAN

8 0 8 16
SCALE OF FEET

ALWAYS THINK SAFETY

UNITED STATES
DEPARTMENT OF THE INTERIOR
BUREAU OF RECLAMATION
CENTRAL VALLEY PROJECT
WEST SAN JOAQUIN DIVISION – SAN LUIS UNIT – CALIFORNIA

DRAINAGE FEATURE
RE-EVALUATION FEASIBILITY STUDY
WESTLANDS WATER DISTRICT
CENTRAL REVERSE OSMOSIS PLANT LAYOUT

DESIGNED BY Frank Wendt
REVIEWED BY Scott R. Irvine

CADD SYSTEM	CADD FILENAME
DENVER, COLORADO SEPTEMBER 11, 2006 SHEET 1 OF 1	805-D-10417

PLOTTED BY:

K

805-D-10418

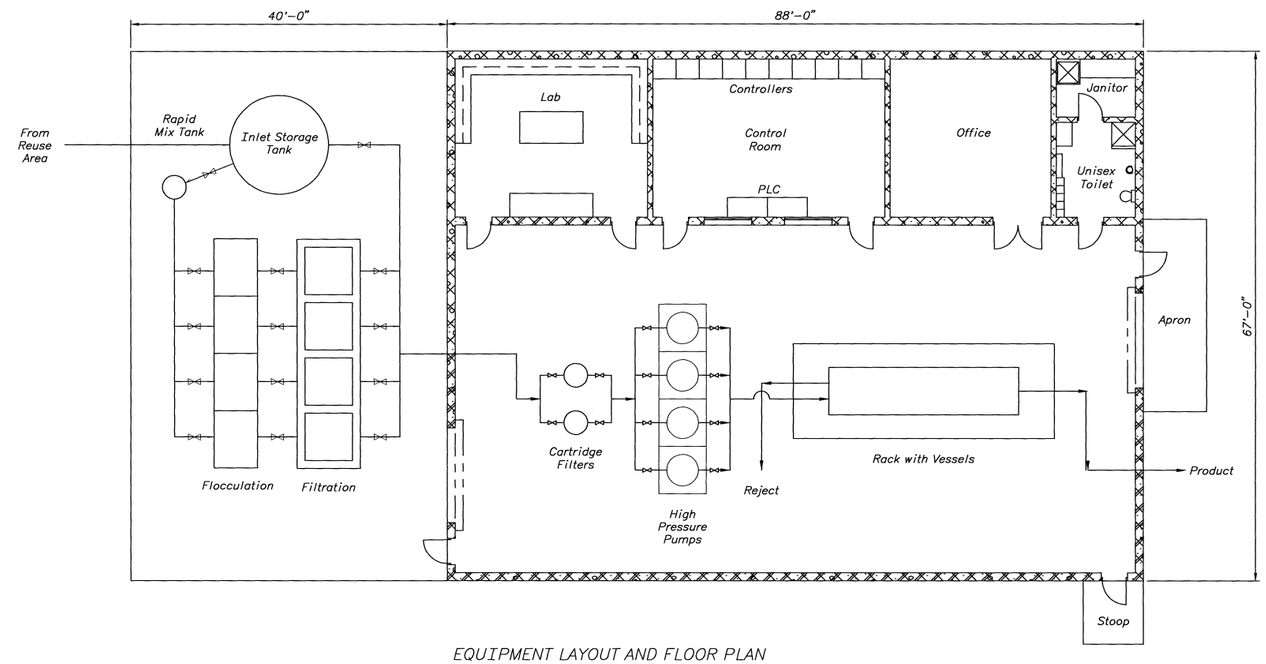

EQUIPMENT LAYOUT AND FLOOR PLAN

8 0 8 16
SCALE OF FEET

ALWAYS THINK SAFETY

UNITED STATES
DEPARTMENT OF THE INTERIOR
BUREAU OF RECLAMATION
CENTRAL VALLEY PROJECT
WEST SAN JOAQUIN DIVISION – SAN LUIS UNIT – CALIFORNIA

DRAINAGE FEATURE
RE-EVALUATION FEASIBILITY STUDY

WESTLANDS WATER DISTRICT
NORTH REVERSE OSMOSIS PLANT LAYOUT

DESIGNED BY Frank Watts
REVIEWED BY Scott R. Davies

CADD SYSTEM	CADD FILENAME
DENVER, COLORADO SEPTEMBER 11, 2008 SHEET 1 OF 1	805-D-10418

PLOTTED BY:

K

805-D-10419

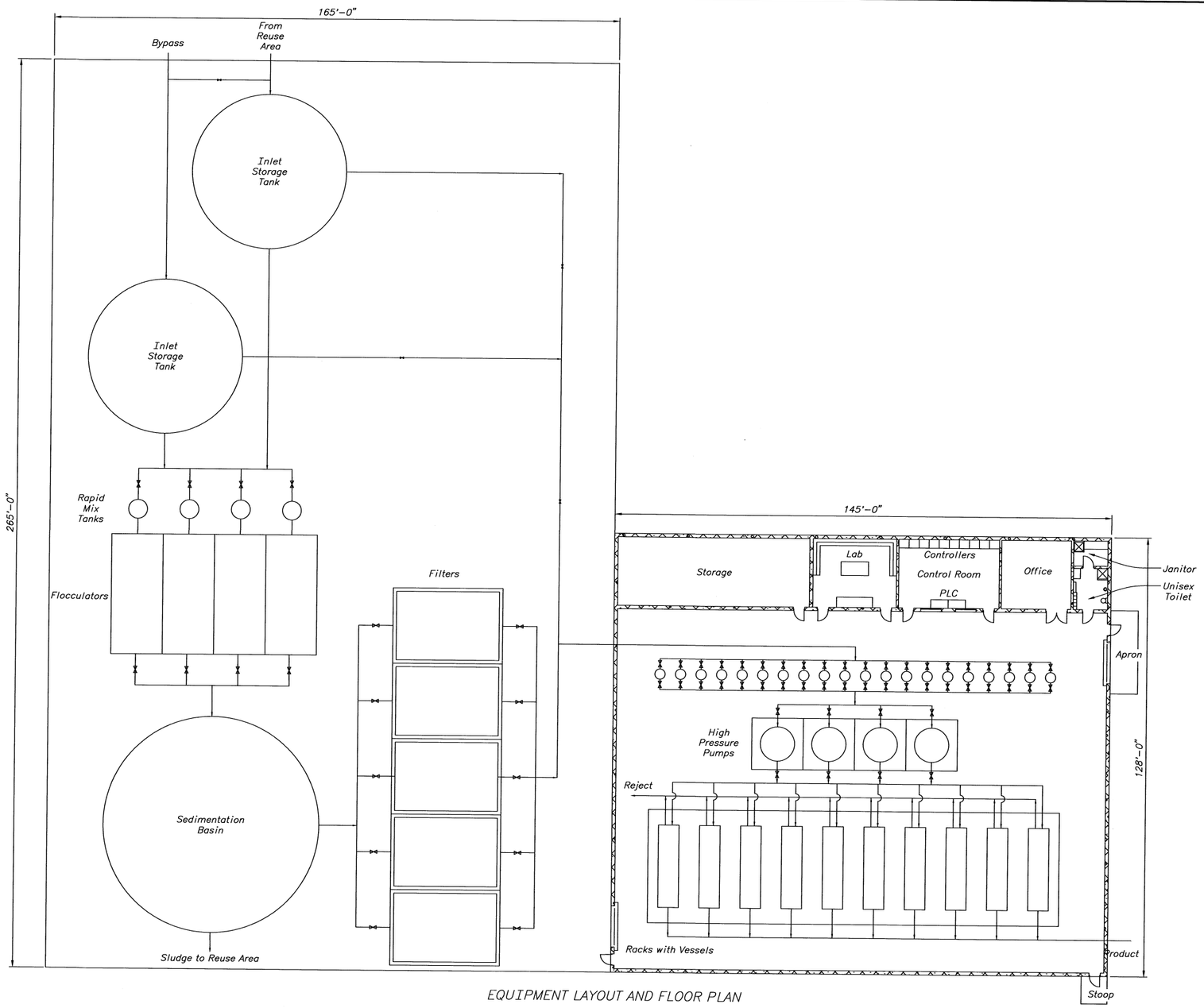

EQUIPMENT LAYOUT AND FLOOR PLAN

15 0 15 30 45
SCALE OF FEET

ALWAYS THINK SAFETY

UNITED STATES
DEPARTMENT OF THE INTERIOR
BUREAU OF RECLAMATION
CENTRAL VALLEY PROJECT
WEST SAN JOAQUIN DIVISION – SAN LUIS UNIT – CALIFORNIA

DRAINAGE FEATURE
RE-EVALUATION FEASIBILITY STUDY

NORTHERLY AREA
REVERSE OSMOSIS PLANY LAYOUT

DESIGNED BY
REVIEWED BY Scott R. Irvine

CADD SYSTEM	CADD FILENAME
DENVER, COLORADO SEPTEMBER 11, 2006 SHEET 1 OF 1	805-D-10419

PLOTTED BY:

K

805-D-10420

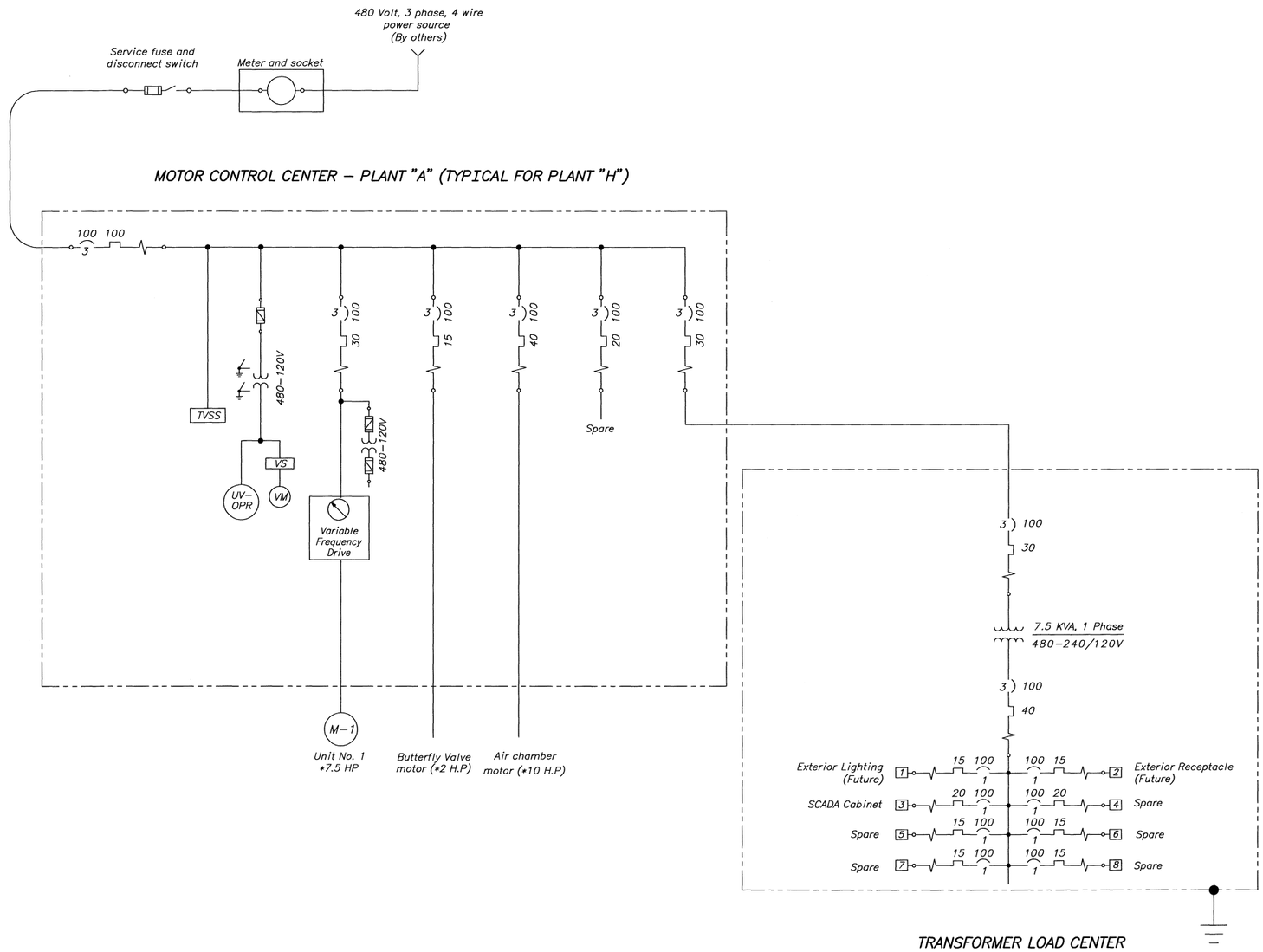

NOTE

1. This drawing shows estimated sizing. Coordinate actual sizing and installations per the NEC and the actual equipment provided. This shall include but not limited to the coordination of the actual equipment loads, etc,.

SYMBOLS

- 1 2 / 3 — Circuit breaker; 1. Frame size; 2. Thermal trip; 3. No. of poles
- Power transformer
- * — Estimated
- Contactor
- Potential transformer or control circuit transformer
- Grounded open DELTA connection
- Current limiting fuse
- Fuse and disconnect switch
- M — Motor
- Ground

DESIGNATIONS

TVSS	Transient voltage surge suppressor
UV	Undervoltage relay
OPR	Single and reverse phase relay
VM	Voltmeter
VS	Voltmeter transfer switch
M	Motor

REFERENCE DRAWING

WESTLANDS AREA PUMPING PLANT
FIXED & ADJUSTABLE SPEED DRIVE
SCHEMATIC DIAGRAMS ---------- 805-D-10424

ALWAYS THINK SAFETY

UNITED STATES
DEPARTMENT OF THE INTERIOR
BUREAU OF RECLAMATION
CENTRAL VALLEY PROJECT
WEST SAN JOAQUIN DIVISION – SAN LUIS UNIT – CALIFORNIA

DRAINAGE FEATURE
RE-EVALUATION FEASIBILITY STUDY
ELECTRICAL INSTALLATION
WESTLANDS WATER DISTRICT PUMPING PLANT
MOTOR CONTROL CENTER AND TRANSFORMER LOAD CENTER

DESIGNED BY
REVIEWED BY L.J. Rossi

DENVER, COLORADO 2006-01-31
SHEET 1 OF 1

805-D-10420

K

CAD SYSTEM AutoCAD R14 16.0a
CAD FILENAME 805-D-10420.DWG
DATE/TIME PLOTTED MAY 8, 2007 08:47
PLOTTED BY RKOI

805-D-10421

NOTES

1. This drawing shows estimated sizing. Coordinate actual sizing and installations per the NEC and the actual equipment provided. This shall include but not limited to the coordination of the actual equipment loads, etc,.

2. The electrical equipment at each of these plants (B & C) will be similar.

SYMBOLS

- Circuit breaker — 1. Frame size; 2. Thermal trip; 3. No. of poles
- Power transformer
- Fuse and disconnect switch
- * Estimated
- Ground

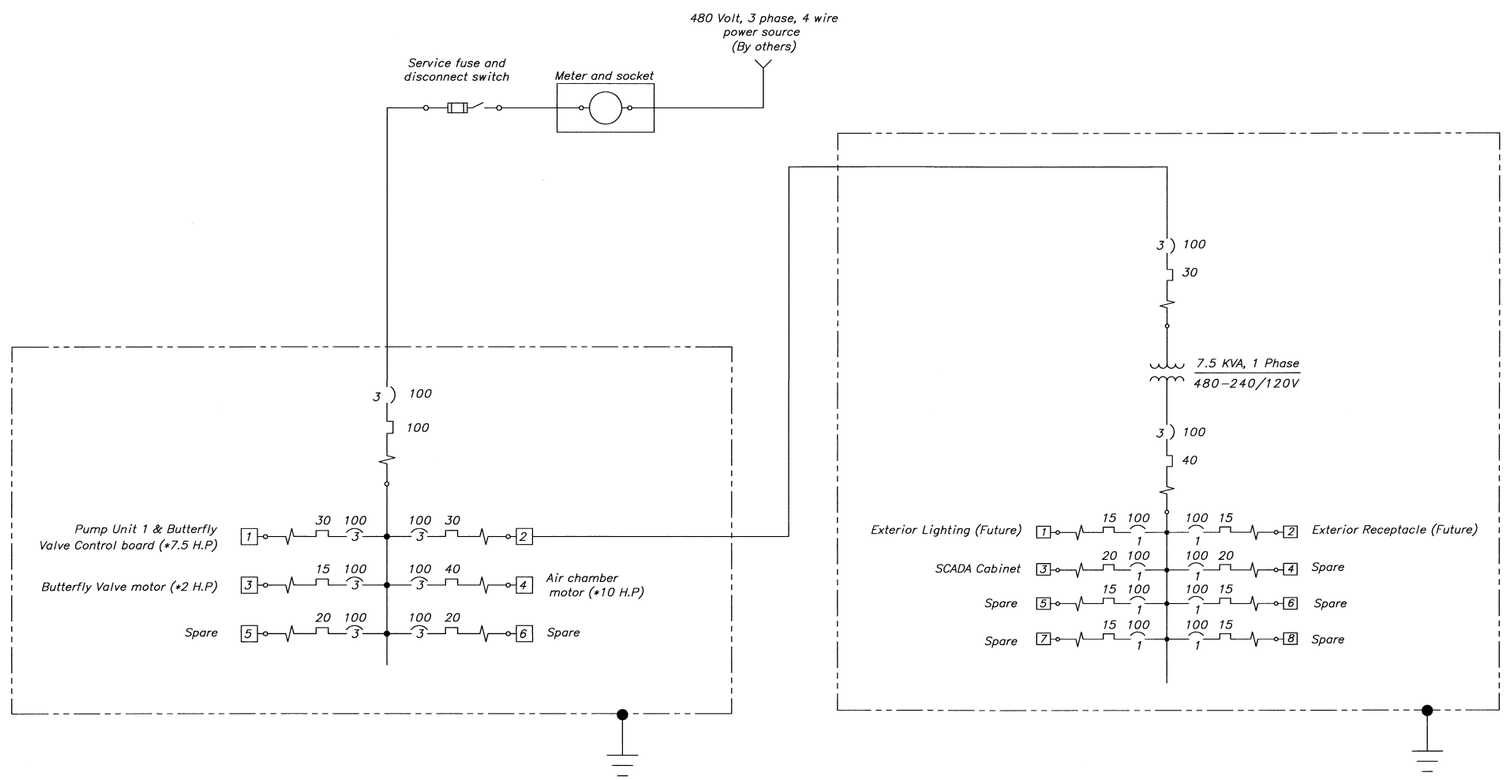

DISTRIBUTON PANELBOARD "DP1"

TRANSFORMER LOAD CENTER "DP2"

REFERENCE DRAWING

WESTLANDS AREA PUMPING PLANT
FIXED & ADJUSTABLE SPEED DRIVE
SCHEMATIC DIAGRAMS ---------- 805-D-10424

PLANT "B" – (TYPICAL FOR PLANT "C")

ALWAYS THINK SAFETY

UNITED STATES
DEPARTMENT OF THE INTERIOR
BUREAU OF RECLAMATION
CENTRAL VALLEY PROJECT
WEST SAN JOAQUIN DIVISION – SAN LUIS UNIT – CALIFORNIA

DRAINAGE FEATURE
RE-EVALUATION FEASIBILITY STUDY
ELECTRICAL INSTALLATION
SOUTH WESTLANDS WATER DISTRICT PUMPING PLANT
480 VOLT DISTRIBUTION PANELBOARD & LOAD CENTER

DESIGNED BY
REVIEWED BY

DENVER, COLORADO 2006-01-31
SHEET 1 OF 1
805-D-10421

K

CAD SYSTEM AUTOCAD R 16.0s
CAD FILENAME 805-D-10421.DWG
DATE AND TIME PLOTTED MAR 24 2006 09:46
PLOTTED BY RWOZ

805-D-10422

NOTES

1. This drawing shows estimated sizing. Coordinate actual sizing and installations per the NEC and the actual equipment provided. This shall include but not limited to the coordination of the actual equipment loads, etc,.
2. Motors at Plants "E" "F" and "G" at Central Westlands area are fixed speed. Plant "H" motor is adjustable speed drive. See drawing – 10424 for rating.
3. The electrical equipment at each of these plants (D, E, F, and G) will be similar.

SYMBOLS

- 1 2 / 3 ---- Circuit breaker 1. Frame size; 2. Thermal trip; 3. No. of poles
- ---------- Power transformer
- ------ Fuse and disconnect switch
- * ---------- Estimated
- ---------- Ground

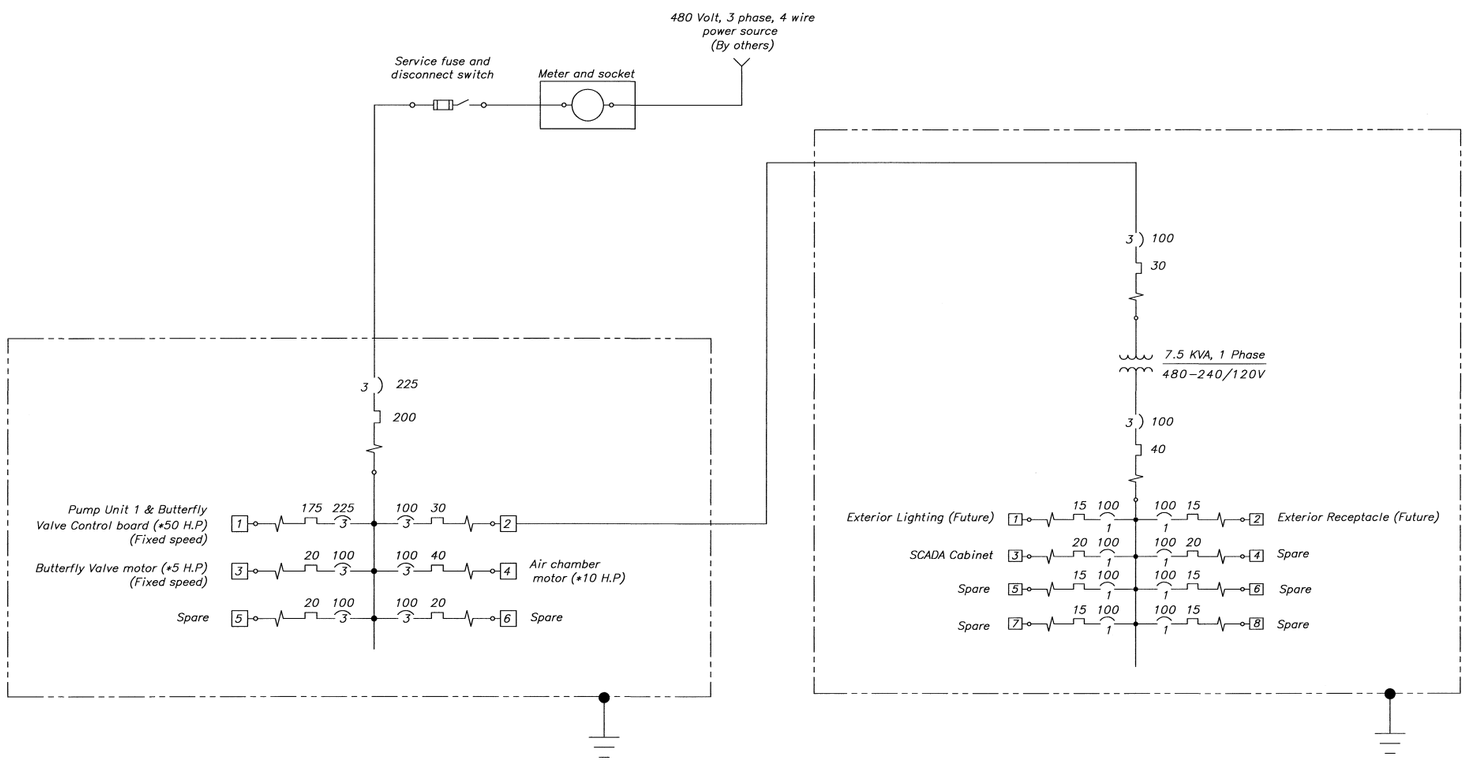

DISTRIBUTON PANELBOARD "DP1"

TRANSFORMER LOAD CENTER "DP2"

REFERENCE DRAWING

WESTLANDS AREA PUMPING PLANT
FIXED & ADJUSTABLE SPEED DRIVE
SCHEMATIC DIAGRAMS ---------- 805-D-10424

PLANT "D" – (TYPICAL FOR PLANTS "E", "F", AND "G")

ALWAYS THINK SAFETY

UNITED STATES
DEPARTMENT OF THE INTERIOR
BUREAU OF RECLAMATION
CENTRAL VALLEY PROJECT
WEST SAN JOAQUIN DIVISION – SAN LUIS UNIT – CALIFORNIA

DRAINAGE FEATURE
RE-EVALUATION FEASIBILITY STUDY
ELECTRICAL INSTALLATION
CENTRAL WESTLANDS WATER DISTRICT PUMPING PLANT
480 VOLT DISTRIBUTION PANELBOARD & LOAD CENTER

DESIGNED BY
REVIEWED BY

DENVER, COLORADO 2006-01-31
SHEET 1 OF 1

805-D-10422

K

CAD SYSTEM AutoCAD Rel. 16.0a
CAD FILENAME 805-D-10422.DWG
DATE AND TIME PLOTTED MAR 2, 2007 09:49
PLOTTED BY RWO1

NOTES

1. This drawing shows estimated sizing. Coordinate actual sizing and installations per the NEC and the actual equipment provided. This shall include but not limited to the coordination of the actual equipment loads, etc,.
2. Motors at Plants "N" and "O" at North Westlands area are fixed speed. See drawing – 10424 for rating.
3. The electrical equipment at each of these plants (M, N, and O) will be similar.

SYMBOLS

- Circuit breaker — 1. Frame size; 2. Thermal trip; 3. No. of poles
- Power transformer
- Fuse and disconnect switch
- * Estimated
- Ground

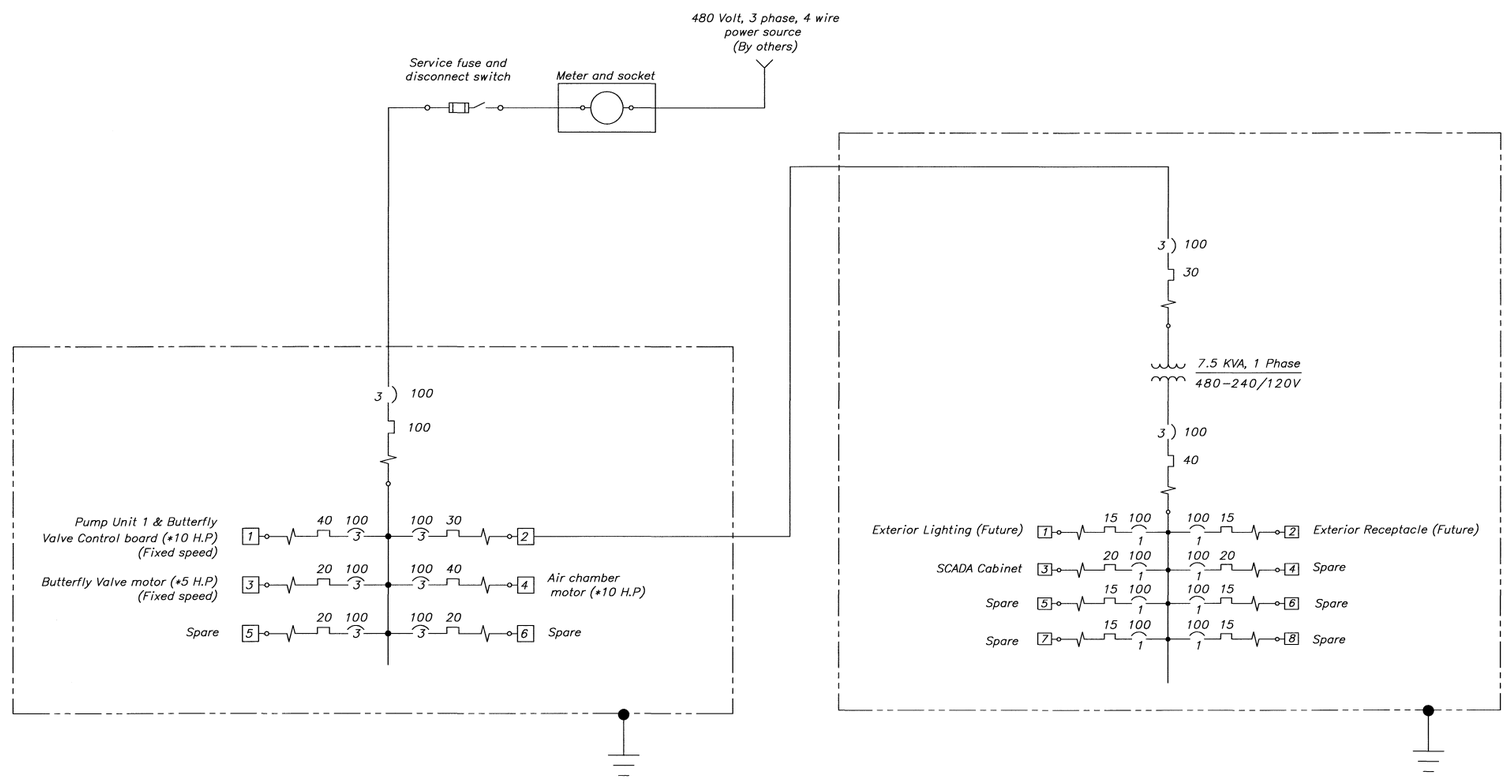

PLANT "M" – (TYPICAL FOR PLANTS "N" AND "O")

REFERENCE DRAWING

WESTLANDS AREA PUMPING PLANT
FIXED & ADJUSTABLE SPEED DRIVE
SCHEMATIC DIAGRAMS ---------- 805-D-10424

ALWAYS THINK SAFETY

UNITED STATES
DEPARTMENT OF THE INTERIOR
BUREAU OF RECLAMATION
CENTRAL VALLEY PROJECT
WEST SAN JOAQUIN DIVISION – SAN LUIS UNIT – CALIFORNIA

DRAINAGE FEATURE
RE-EVALUATION FEASIBILITY STUDY
ELECTRICAL INSTALLATION
NORTH WESTLANDS WATER DISTRICT PUMPING PLANT
480 VOLT DISTRIBUTION PANELBOARD & LOAD CENTER

DESIGNED BY
REVIEWED BY

DENVER, COLORADO 2006-01-31
SHEET 1 OF 1
805-D-10423

K

CAD SYSTEM AutoCAD Rel. 16.0s
DWG FILENAME 805-D-10423.DWG
DATE AND TIME PLOTTED MAY 9, 2007 09:50
PLOTTED BY RH01

WESTLANDS WATER DISTRICT PUMPING PLANT (FIXED SPEED UNITS)

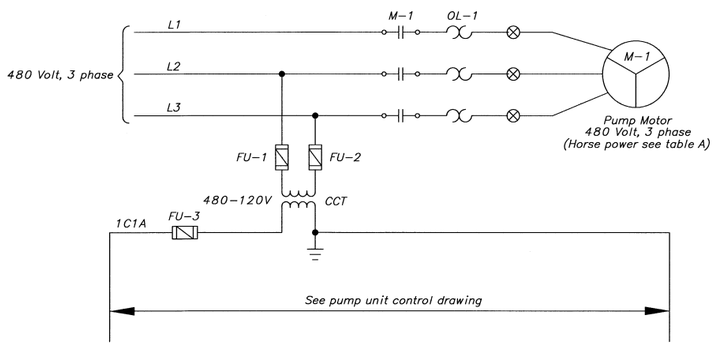

WESTLANDS WATER DISTRICT PUMPING PLANT (VARIABLE FREQUENCY DRIVE UNITS)

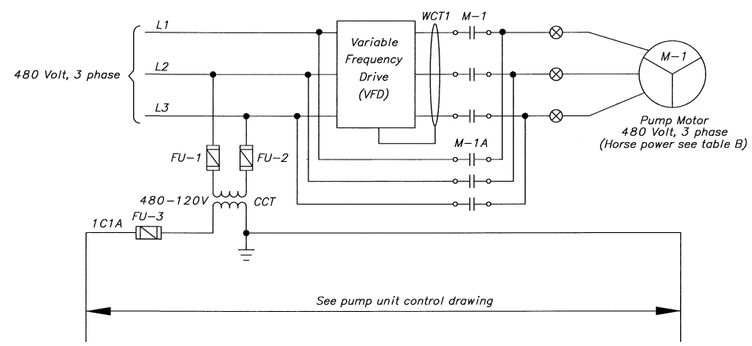

NOTES

1. Reference drawing 104-D-757 for addition symbole and designations.
2. Contractor shall determine size for all fuses and overloads.
3. The electrical equipment at each of these plants will be similar.

SYMBOLS

*	Estimated
	Power transformer
	Ground
	Motor
	Indicate terminal block located in the control board and use for connections to the equipment
	Contact
	Current limiting fuse

DESIGNATIONS

CCT	Control circuit transformer
M	Main motor contactor
OL	Thermal overload relay
WCT	Ground fault sensor

WIRE DESIGNATOR

Control Circuit = 1 C 1 B

- Gate number
- Control circuit
- Rung No.
- Wire No.

TABLE – A

PUMP LOCATION	PLANT DESIGNATION	UNIT MOTOR (* HORSE POWER)	AIR CHAMBER (* HORSE POWER)
SOUTH	B	7.5	10
	C	40	10
CENTRAL	D	50	10
	E	15	10
	F	1	NONE
	G	10	10
NORTH	M	10	10
	N	7.5	10
	O	10	NONE

TABLE – B

PUMP LOCATION	PLANT DESIGNATION	UNIT MOTOR (* HORSE POWER)	AIR CHAMBER (* HORSE POWER)
SOUTH	A	7.5	10
CENTRAL	H	40	10

ALWAYS THINK SAFETY

UNITED STATES
DEPARTMENT OF THE INTERIOR
BUREAU OF RECLAMATION
CENTRAL VALLEY PROJECT
WEST SAN JOAQUIN DIVISION – SAN LUIS UNIT – CALIFORNIA

DRAINAGE FEATURE
RE-EVALUATION FEASIBILITY STUDY
ELECTRICAL INSTALLATION
WESTLANDS WATER DISTRICT PUMPING PLANT
FIXED & VARIABLE FREQUENCY DRIVE SCHEMATIC DIAGRAMS

DESIGNED BY
REVIEWED BY

DENVER, COLORADO 2006-03-07
SHEET 1 OF 1

805-D-10424

K

CAD SYSTEM MICROSTATION V8.0a
CAD FILENAME 805-D-10424.DWG
DATE/TIME PLOTTED MAY 9 2007 19:31
PLOTTED BY RH01

805-D-10425

NOTES

1. This drawing shows estimated sizing. Coordinate actual sizing and installations per the NEC and the actual equipment provided. This shall include but not limited to the coordination of the actual equipment loads, etc,.
2. Plant "C" motor at DMC Drainage Northerly areas is fixed speed. See drawing – 10431 for rating.
3. The electrical equipment at each of these plants (A/B and C) will be similar.

SYMBOLS

- 1 2 / 3 — Circuit breaker; 1. Frame size; 2. Thermal trip; 3. No. of poles
- Power transformer
- Fuse and disconnect switch
- * — Estimated
- Ground

REFERENCE DRAWING

NORTHERLY AREA PUMPING PLANT
FIXED & ADJUSTABLE SPEED DRIVE
SCHEMATIC DIAGRAMS ---------- 805-D-10431

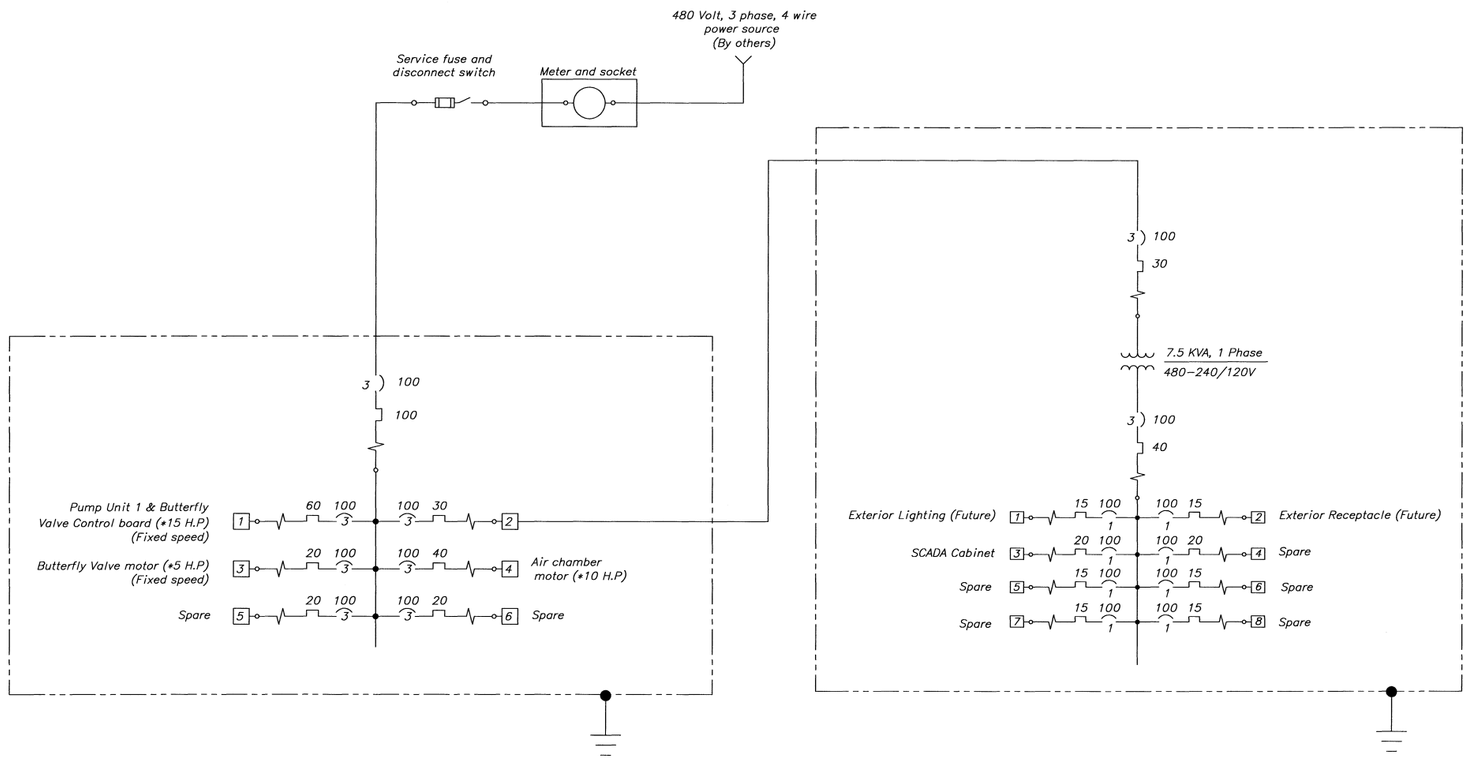

DISTRIBUTON PANELBOARD "DP1"

TRANSFORMER LOAD CENTER "DP2"

PLANT "A/B" – (TYPICAL FOR PLANT "C")

ALWAYS THINK SAFETY

UNITED STATES
DEPARTMENT OF THE INTERIOR
BUREAU OF RECLAMATION
CENTRAL VALLEY PROJECT
WEST SAN JOAQUIN DIVISION – SAN LUIS UNIT – CALIFORNIA

DRAINAGE FEATURE
RE-EVALUATION FEASIBILITY STUDY
ELECTRICAL INSTALLATION
DMC DRAINAGE NORTHERLY AREA PUMPING PLANT
480 VOLT DISTRIBUTION PANELBOARD & LOAD CENTER

DESIGNED BY
REVIEWED BY

DENVER, COLORADO 2006-01-31
SHEET 1 OF 1

805-D-10425

K

CAD SYSTEM AutoCAD 16.0s
CAD FILENAME 805-D-10425.DWG
DATE/TIME PLOTTED MAY 9, 2012 09:51
PLOTTED BY RH01

805-D-10426

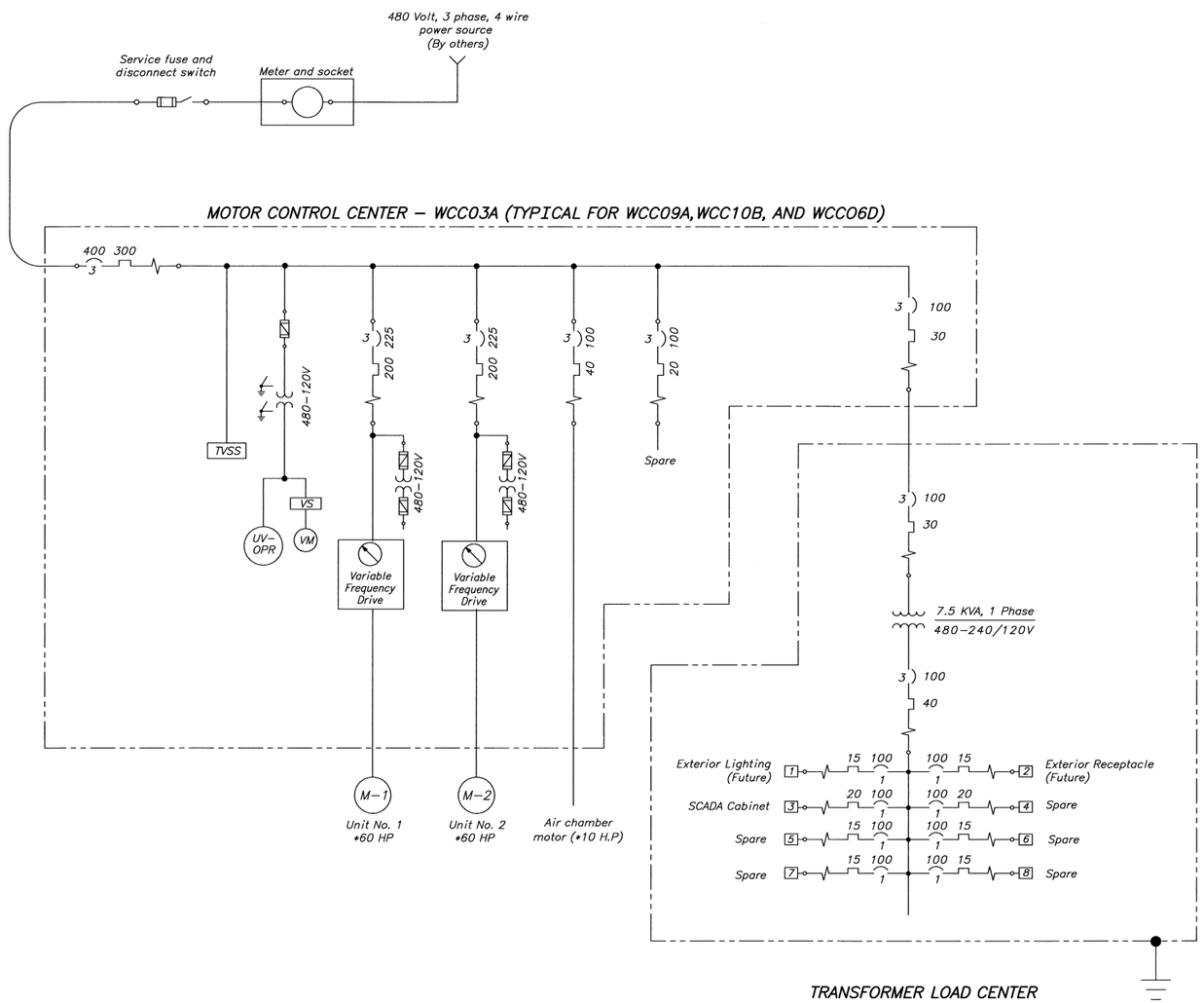

NOTE

1. This drawing shows estimated sizing. Coordinate actual sizing and installations per the NEC and the actual equipment provided. This shall include but not limited to the coordination of the actual equipment loads, etc,.

SYMBOLS

- Circuit breaker — 1. Frame size; 2. Thermal trip; 3. No. of poles
- Power transformer
- * — Estimated
- Ground
- Contactor
- Potential transformer or control circuit transformer
- Grounded open DELTA connection
- Current limiting fuse
- Fuse and disconnect switch
- M — Motor

DESIGNATIONS

TVSS	Transient voltage surge suppressor
UV	Undervoltage relay
OPR	Single and reverse phase relay
VM	Voltmeter
VS	Voltmeter transfer switch
M	Motor

REFERENCE DRAWING

NORTHERLY AREA PUMPING PLANT
FIXED & ADJUSTABLE SPEED DRIVE
SCHEMATIC DIAGRAMS ---------- 805-D-10431

ALWAYS THINK SAFETY

UNITED STATES
DEPARTMENT OF THE INTERIOR
BUREAU OF RECLAMATION
CENTRAL VALLEY PROJECT
WEST SAN JOAQUIN DIVISION – SAN LUIS UNIT – CALIFORNIA

DRAINAGE FEATURE
RE–EVALUATION FEASIBILITY STUDY
ELECTRICAL INSTALLATION
CONVEYANCE NORTHERLY AREA PUMPING PLANT
480 VOLT DISTRIBUTION SYSTEM AND LOAD CENTER

DESIGNED BY
REVIEWED BY L. J. Romi

DENVER, COLORADO 2006–01–31
SHEET 1 OF 1

805–D–10426

K

CAD SYSTEM AutoCAD Rel. 16.0a
CAD FILENAME 805–D–10426.DWG
DATE LAST MODIFIED MAY 8, 2007 09:52
PLOTTED BY RWIZ

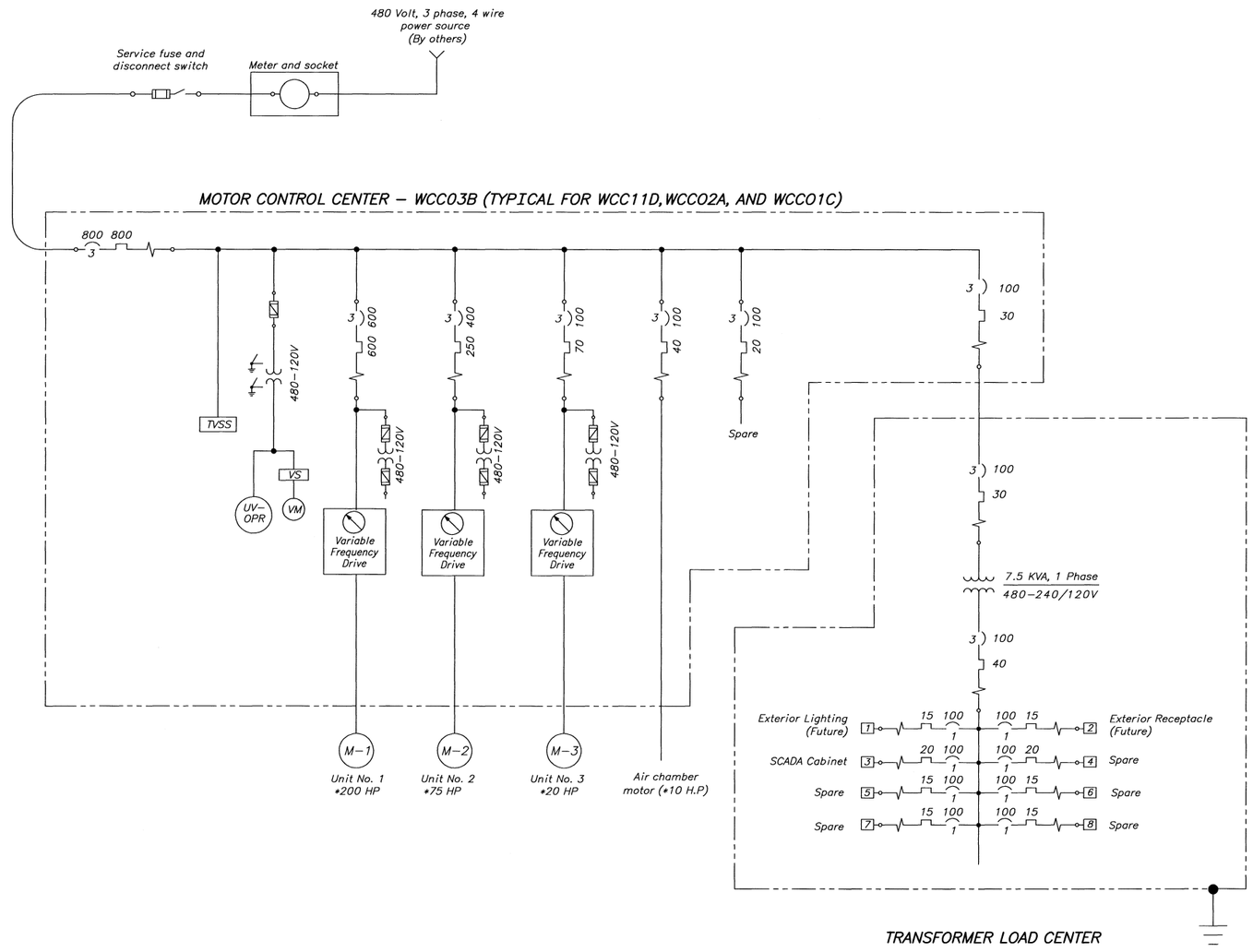

NOTE

1. This drawing shows estimated sizing. Coordinate actual sizing and installations per the NEC and the actual equipment provided. This shall include but not limited to the coordination of the actual equipment loads, etc,.

SYMBOLS

- Circuit breaker (1. Frame size; 2. Thermal trip; 3. No. of poles)
- Power transformer
- Estimated
- Ground
- Contactor
- Potential transformer or control circuit transformer
- Grounded open DELTA connection
- Current limiting fuse
- Fuse and disconnect switch
- Motor

DESIGNATIONS

TVSS	Transient voltage surge suppressor
UV	Undervoltage relay
OPR	Single and reverse phase relay
VM	Voltmeter
VS	Voltmeter transfer switch
M	Motor

REFERENCE DRAWINGS

NORTHERLY AREA PUMPING PLANT
FIXED & ADJUSTABLE SPEED DRIVE
SCHEMATIC DIAGRAMS ---------- 805-D-10431

ALWAYS THINK SAFETY

UNITED STATES
DEPARTMENT OF THE INTERIOR
BUREAU OF RECLAMATION
CENTRAL VALLEY PROJECT
WEST SAN JOAQUIN DIVISION – SAN LUIS UNIT – CALIFORNIA

DRAINAGE FEATURE
RE-EVALUATION FEASIBILITY STUDY
ELECTRICAL INSTALLATION
CONVEYANCE NORTHERLY AREA PUMPING PLANT
480 VOLT DISTRIBUTION SYSTEM AND LOAD CENTER

DESIGNED BY
REVIEWED BY

DENVER, COLORADO 2006-01-31
SHEET 1 OF 1

805-D-10427

K

CAD SYSTEM AUTOCAD Rel. 15.0s
CAD FILENAME 805-D-10427.DWG
DATE AND TIME PLOTTED MAR 2, 2007 14:53
PLOTTED BY RNOI

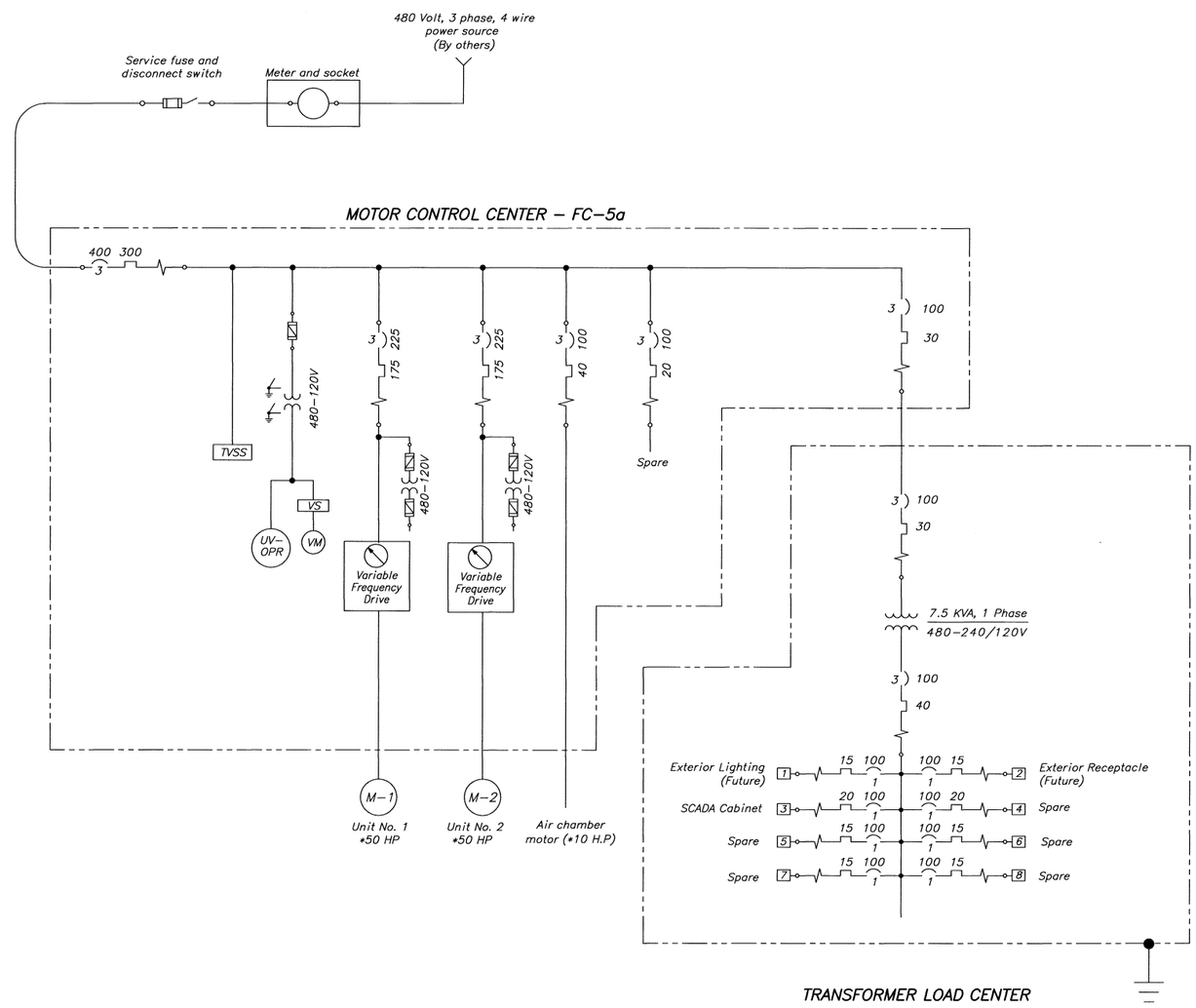

NOTE

1. This drawing shows estimated sizing. Coordinate actual sizing and installations per the NEC and the actual equipment provided. This shall include but not limited to the coordination of the actual equipment loads, etc,.

SYMBOLS

- Circuit breaker — 1. Frame size; 2. Thermal trip; 3. No. of poles
- Power transformer
- * — Estimated
- Ground
- Contactor
- Potential transformer or control circuit transformer
- Grounded open DELTA connection
- Current limiting fuse
- Fuse and disconnect switch
- M — Motor

DESIGNATIONS

TVSS	Transient voltage surge suppressor
UV	Undervoltage relay
OPR	Single and reverse phase relay
VM	Voltmeter
VS	Voltmeter transfer switch
M	Motor

REFERENCE DRAWING

NORTHERLY AREA PUMPING PLANT
FIXED & ADJUSTABLE SPEED DRIVE
SCHEMATIC DIAGRAMS ---------- 805–D–10431

ALWAYS THINK SAFETY

UNITED STATES
DEPARTMENT OF THE INTERIOR
BUREAU OF RECLAMATION
CENTRAL VALLEY PROJECT
WEST SAN JOAQUIN DIVISION – SAN LUIS UNIT – CALIFORNIA

DRAINAGE FEATURE
RE–EVALUATION FEASIBILITY STUDY
ELECTRICAL INSTALLATION
DRAINAGE CANAL NORTHERLY AREA PUMPING PLANT
480 VOLT DISTRIBUTION SYSTEM AND LOAD CENTER

DESIGNED BY
REVIEWED BY L. J. Rossi

DENVER, COLORADO 2006–01–31
SHEET 1 OF 1
805–D–10428

CAD SYSTEM AutoCAD Rel. 16.0a
CAD FILENAME 805–D–10428.DWG
DATE/TIME PLOTTED MAY 8, 2007 09:51
PLOTTED BY RKOI

805-D-10429

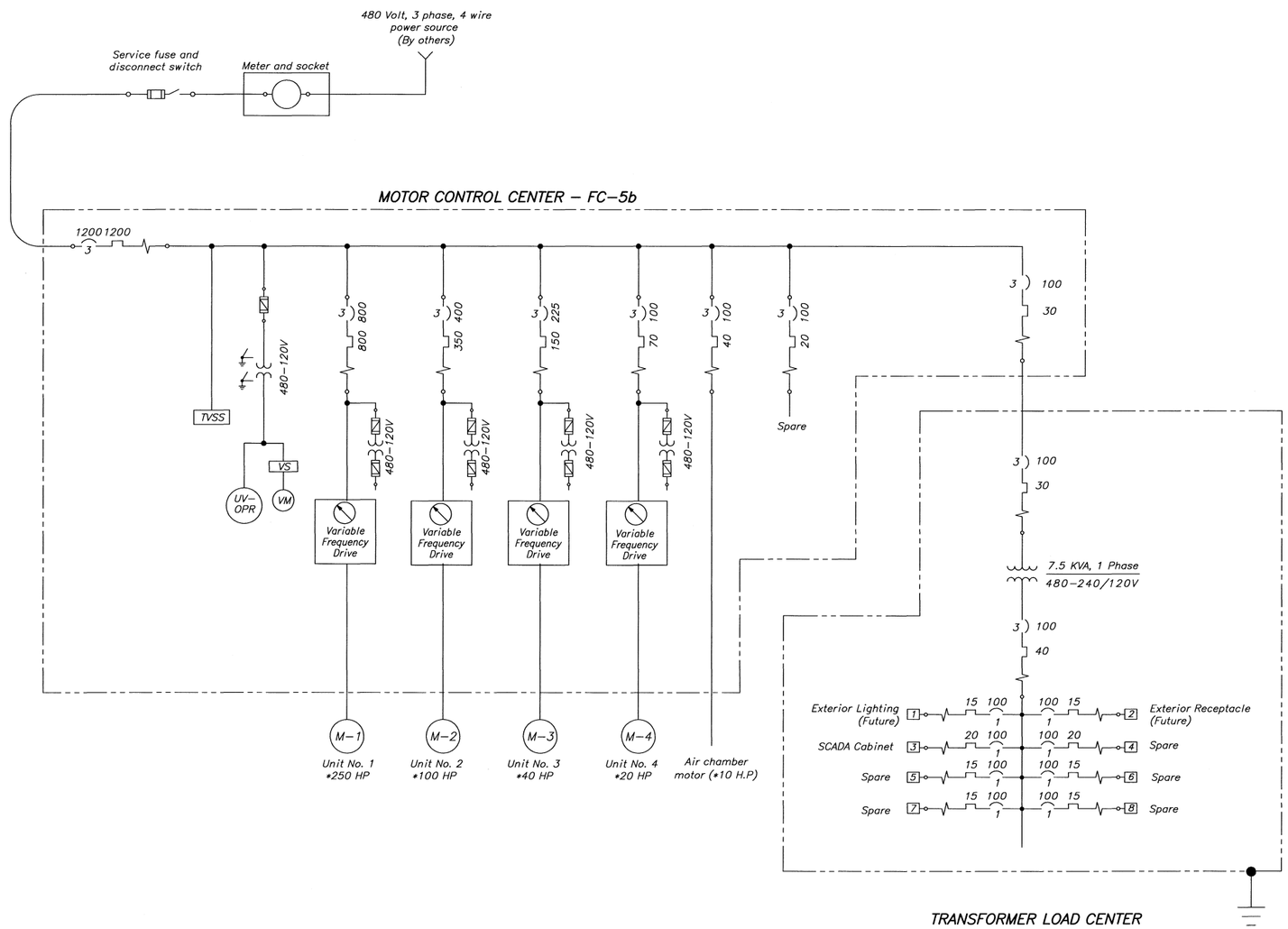

NOTE

1. This drawing shows estimated sizing. Coordinate actual sizing and installations per the NEC and the actual equipment provided. This shall include but not limited to the coordination of the actual equipment loads, etc,.

SYMBOLS

- Circuit breaker (1. Frame size; 2. Thermal trip; 3. No. of poles)
- Power transformer
- * Estimated
- Ground
- Contactor
- Potential transformer or control circuit transformer
- Grounded open DELTA connection
- Current limiting fuse
- Fuse and disconnect switch
- M Motor

DESIGNATIONS

TVSS	Transient voltage surge suppressor
UV	Undervoltage relay
OPR	Single and reverse phase relay
VM	Voltmeter
VS	Voltmeter transfer switch
M	Motor

REFERENCE DRAWING

NORTHERLY AREA PUMPING PLANT
FIXED & ADJUSTABLE SPEED DRIVE
SCHEMATIC DIAGRAMS ---------- 805-D-10431

ALWAYS THINK SAFETY

UNITED STATES
DEPARTMENT OF THE INTERIOR
BUREAU OF RECLAMATION
CENTRAL VALLEY PROJECT
WEST SAN JOAQUIN DIVISION – SAN LUIS UNIT – CALIFORNIA

DRAINAGE FEATURE
RE-EVALUATION FEASIBILITY STUDY
ELECTRICAL INSTALLATION
DRAINAGE CANAL NORTHERLY AREA PUMPING PLANT
480 VOLT DISTRIBUTION SYSTEM AND LOAD CENTER

DESIGNED BY
REVIEWED BY

DENVER, COLORADO 2006-01-31
SHEET 1 OF 1

805-D-10429

K

CAD SYSTEM AutoCAD Rel. 16.0a
CAD FILENAME 805-D-10429.DWG
DATE WRITTEN 2006-01-31
MAY 4, 2007 09:54
PLOTTED BY PM01

805-D-10430

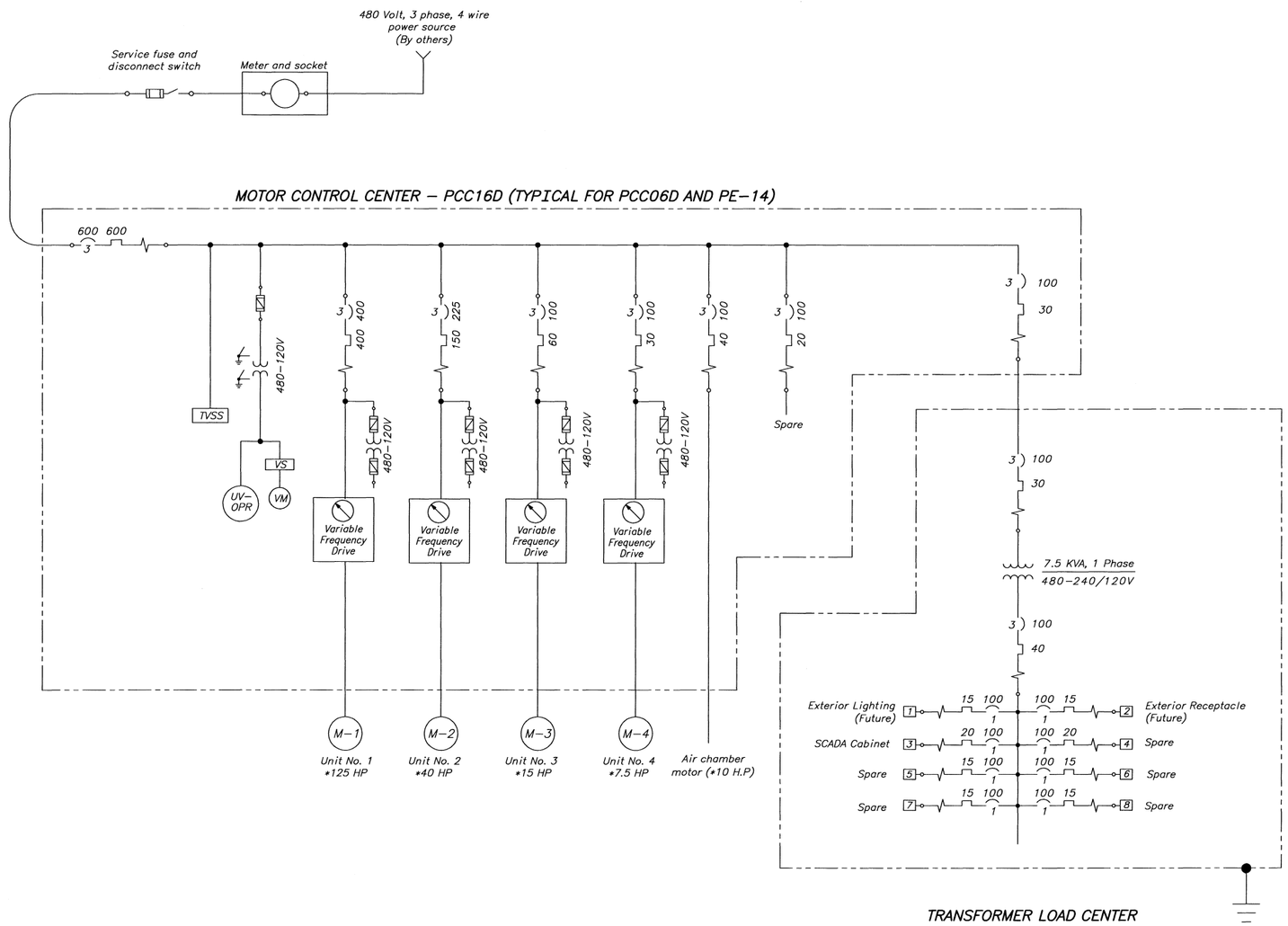

NOTE

1. This drawing shows estimated sizing. Coordinate actual sizing and installations per the NEC and the actual equipment provided. This shall include but not limited to the coordination of the actual equipment loads, etc,.

SYMBOLS

- Circuit breaker — 1. Frame size; 2. Thermal trip; 3. No. of poles
- Power transformer
- * — Estimated
- Ground
- Contactor
- Potential transformer or control circuit transformer
- Grounded open DELTA connection
- Current limiting fuse
- Fuse and disconnect switch
- M — Motor

DESIGNATIONS

TVSS	Transient voltage surge suppressor
UV	Undervoltage relay
OPR	Single and reverse phase relay
VM	Voltmeter
VS	Voltmeter transfer switch
M	Motor

REFERENCE DRAWING

NORTHERLY AREA PUMPING PLANT
FIXED & ADJUSTABLE SPEED DRIVE
SCHEMATIC DIAGRAMS ---------- 805-D-10431

ALWAYS THINK SAFETY

UNITED STATES
DEPARTMENT OF THE INTERIOR
BUREAU OF RECLAMATION
CENTRAL VALLEY PROJECT
WEST SAN JOAQUIN DIVISION – SAN LUIS UNIT – CALIFORNIA

DRAINAGE FEATURE
RE–EVALUATION FEASIBILITY STUDY
ELECTRICAL INSTALLATION
DRAINAGE CANAL NORTHERLY AREA PUMPING PLANT
480 VOLT DISTRIBUTION SYSTEM AND LOAD CENTER

DESIGNED BY
REVIEWED BY

DENVER, COLORADO 2006–01–31
SHEET 1 OF 1

805–D–10430

CAD SYSTEM AutoCAD Rev. 16.0s
CAD FILENAME 805D10430.DWG
DATE AND TIME PLOTTED MAY 9, 2007 19:35
PLOTTED BY PWOLF

DMC DRAINAGE, NORTHERLY AREAS PUMPING PLANT (FIXED SPEED UNITS)

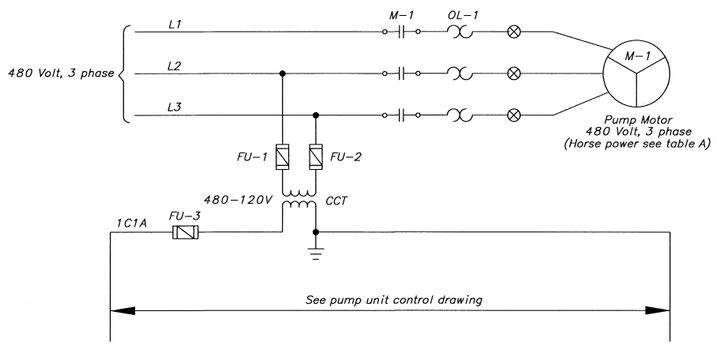

CONVEYANCE AND DRAINAGE CANAL NORTHERLY AREAS PUMPING PLANT (VARIABLE FREQUENCY DRIVE UNITS)

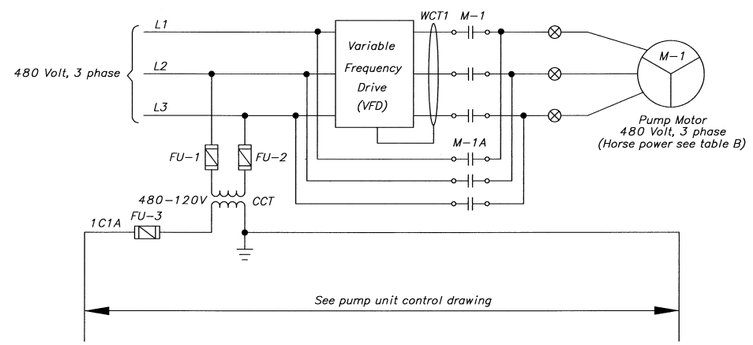

NOTES

1. Reference drawing 104-D-757 for addition symbole and designations.
2. Contractor shall determine size for all fuses and overloads.
3. The electrical equipment at each of these plants will be similar.

SYMBOLS

*	Estimated
	Power transformer
	Ground
	Motor
	Indicate terminal block located in the control board and use for connections to the equipment
	Contact
	Current limiting fuse

DESIGNATIONS

CCT	Control circuit transformer
M	Main motor contactor
OL	Thermal overload relay
WCT	Ground fault sensor

TABLE – A

PUMP LOCATION	PLANT DESIGNATION	UNIT MOTOR (* HORSE POWER)	AIR CHAMBER (* HORSE POWER)
DMC DRAINAGE	A/B	15	10
	C	40	10

TABLE – B

PUMP LOCATION	PLANT DESIGNATION	UNIT MOTOR (* HORSE POWER)	AIR CHAMBER (* HORSE POWER)
CONVEYANCE	WCC03A	60;60	10
	WCC09A	60;60	10
	WCC10B	60;60	10
	WCC06D	60;60	10
	WCC03B	200;75;20	10
	WCC11D	200;75;20	10
	WCC02A	200;75;20	10
	WCC01C	200;75;20	10
DRAINAGE CANAL	FC-5a	50;50	10
	FC-5b	250;100;40;20	10
	PCC16D	125;40;15;20	10
	PCC06D	125;40;15;20	10
	PE-14	125;40;15;20	NONE

WIRE DESIGNATOR

Control Circuit = 1 C 1 B

Gate number
Control circuit
Rung No.
Wire No.

ALWAYS THINK SAFETY

UNITED STATES
DEPARTMENT OF THE INTERIOR
BUREAU OF RECLAMATION
CENTRAL VALLEY PROJECT
WEST SAN JOAQUIN DIVISION – SAN LUIS UNIT – CALIFORNIA

DRAINAGE FEATURE
RE-EVALUATION FEASIBILITY STUDY
ELECTRICAL INSTALLATION
NORTHERLY AREA PUMPING PLANT
FIXED & VARIABLE FREQUENCY DRIVE SCHEMATIC DIAGRAMS

DESIGNED BY
REVIEWED BY

DENVER, COLORADO 2006-03-07
SHEET 1 OF 1

805-D-10431

CAD SYSTEM
AUTOCAD R14.0s
CAD FILENAME
805-D-10431.DWG
DATE AND TIME PLOTTED
MAR 6, 2006, 09:21
PLOTTED BY
RNG1

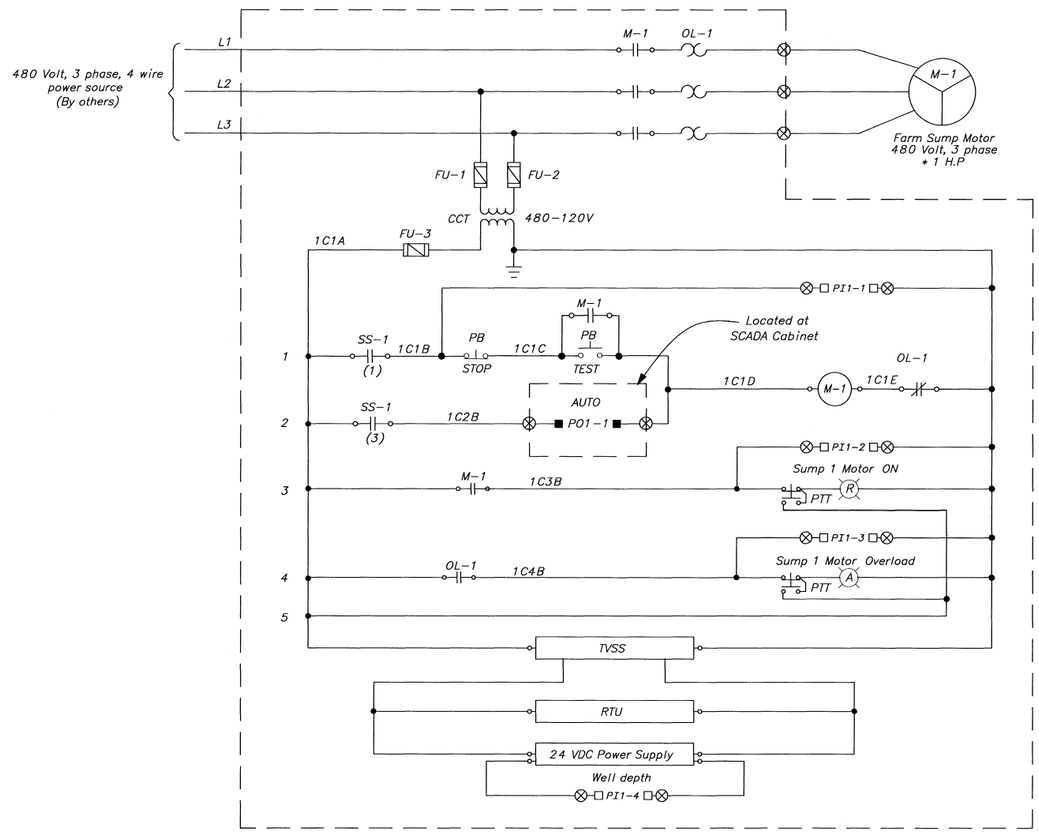

FARM SUMP MOTOR CONTROL SCHEMATIC DIAGRAM
(TYPICAL FOR ALL OTHER FARM SUMP MOTORS)

NOTES

1. Reference drawing 104-D-757 for addition symbole and designations.
2. Locate motor overload reset pushbutton on door of starter.
3. Contractor shall determine size for all fuses and overloads.
4. Mount motor stater in NEMA type 4 X enclosure.

SYMBOLS

*	Estimated
	Power transformer
	Ground
	Motor
	Indicate terminal block located in the control board and use for connections to the equipment
	Indicating lamp
	Contact
	Current limiting fuse
PIX-X	PLC input point with address
POX-X	PLC output point with address

DESIGNATIONS

CCT	Control circuit transformer
M	Main motor contactor
OL	Thermal overload relay
SS	Mode selector switch
PTT	Push to test
R, A	Red and amber indicating lights
PB	Momentary push button

WIRE DESIGNATOR

Control Circuit = 1 C 1 B

- 1 — Gate number
- C — Control circuit
- 1 — Rung No.
- B — Wire No.

Selector Switch SS-1

CONTACT	POSITION		
	TEST	OFF	AUTO
1	X		
2		X	
3			X

ALWAYS THINK SAFETY

UNITED STATES
DEPARTMENT OF THE INTERIOR
BUREAU OF RECLAMATION
CENTRAL VALLEY PROJECT
WEST SAN JOAQUIN DIVISION - SAN LUIS UNIT - CALIFORNIA

DRAINAGE FEATURE
RE-EVALUATION FEASIBILITY STUDY
ELECTRICAL INSTALLATION
SOUTH WESTLANDS WATER DISTRICT PUMPING PLANT
FARM SUMP MOTOR CONTROL SCHEMATIC DIAGRAM

DESIGNED BY
REVIEWED BY

DENVER, COLORADO 2006-03-07
SHEET 1 OF 1

805-D-10432

CAD SYSTEM AutoCAD Rel. 15.0a
CAD FILENAME 805-D-10432-1.DWG
DATE AND TIME PLOTTED MAY 9, 2007 09:36
PLOTTED BY RCL

805-D-10433

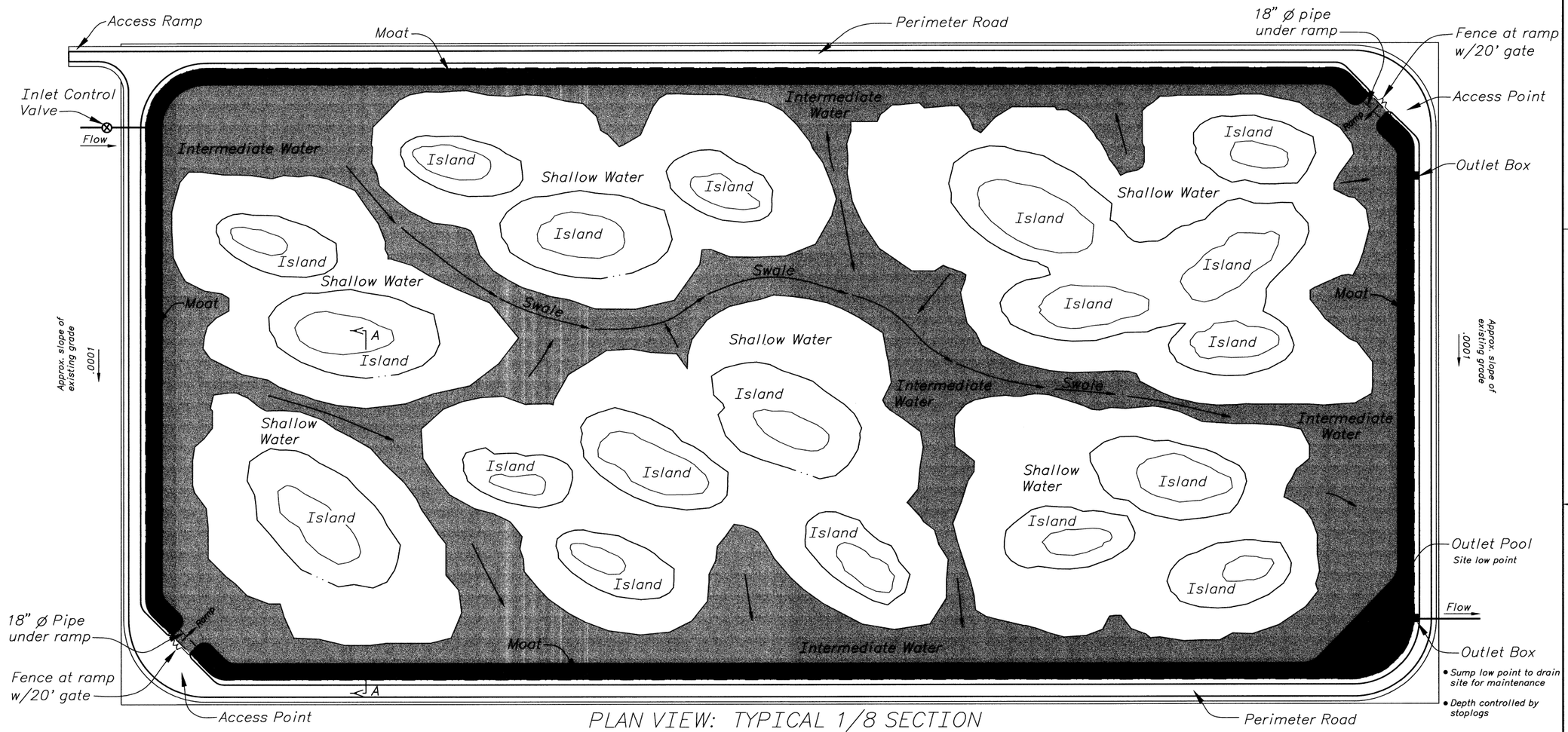

PLAN VIEW: TYPICAL 1/8 SECTION

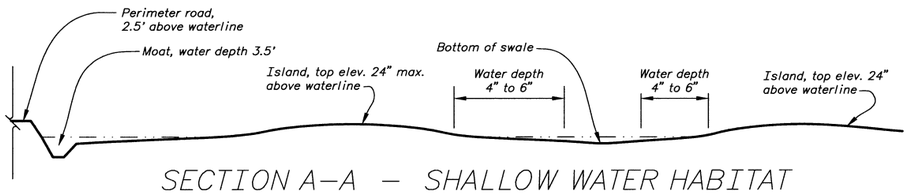

SECTION A–A – SHALLOW WATER HABITAT

Vertical scale exaggerated

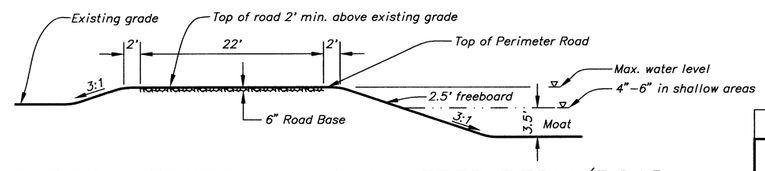

TYPICAL SECTION – PERIMETER BERM/ROAD

100 0 100 200 300
SCALE OF FEET

ALTERNATIVE HABITAT – SHALLOW WATER

Features include:

Topography suitable habitat for shorebirds and dabbling ducks

Shallow water areas – 4"–6" deep with loafing island

ISLANDS

- Top of islands 24" above waterline
- Banks sloped 12:1 for shorebirds

MOAT & SWALES

- Swales 12" or more below waterline, drain to moat
- Moat 3.5' deep, 35' wide, steep slopes for preditor control

SHALLOW WATER

- Benches 4"–6" below waterline
- Flat or very gently sloped benches

INTERMEDIATE WATER

- Surrounds island groupings, deepest points are swale centerlines
- Transition zone from 6" to 12" water depth

ALWAYS THINK **SAFETY**

UNITED STATES
DEPARTMENT OF THE INTERIOR
BUREAU OF RECLAMATION
CENTRAL VALLEY PROJECT
WEST SAN JOAQUIN DIVISION – SAN LUIS UNIT – CALIFORNIA

DRAINAGE FEATURE RE-EVALUATION FEASIBILITY STUDY

NORTHERLY AREA AND WESTLANDS WATER DISTRICT

ALTERNATIVE HABITAT – SHALLOW WATER REPRESENTATIVE SITE PLAN LAYOUT

DESIGNED BY Mary Lou Ricia
REVIEWED BY
STRUCTURAL AND ARCHITECTURAL GROUP

DENVER, COLORADO 2006-01-06
SHEET 1 OF 1

805-D-10433

CAD SYSTEM AutoCAD Rel. 15.0a
DRAWING NAME SAN LUIS DRAIN ALTERNATIVE SHALLOWLONG
DATE AND TIME PLOTTED JAN 16, 2006 12:11
PLOTTED BY MLPERICE

805-D-10434

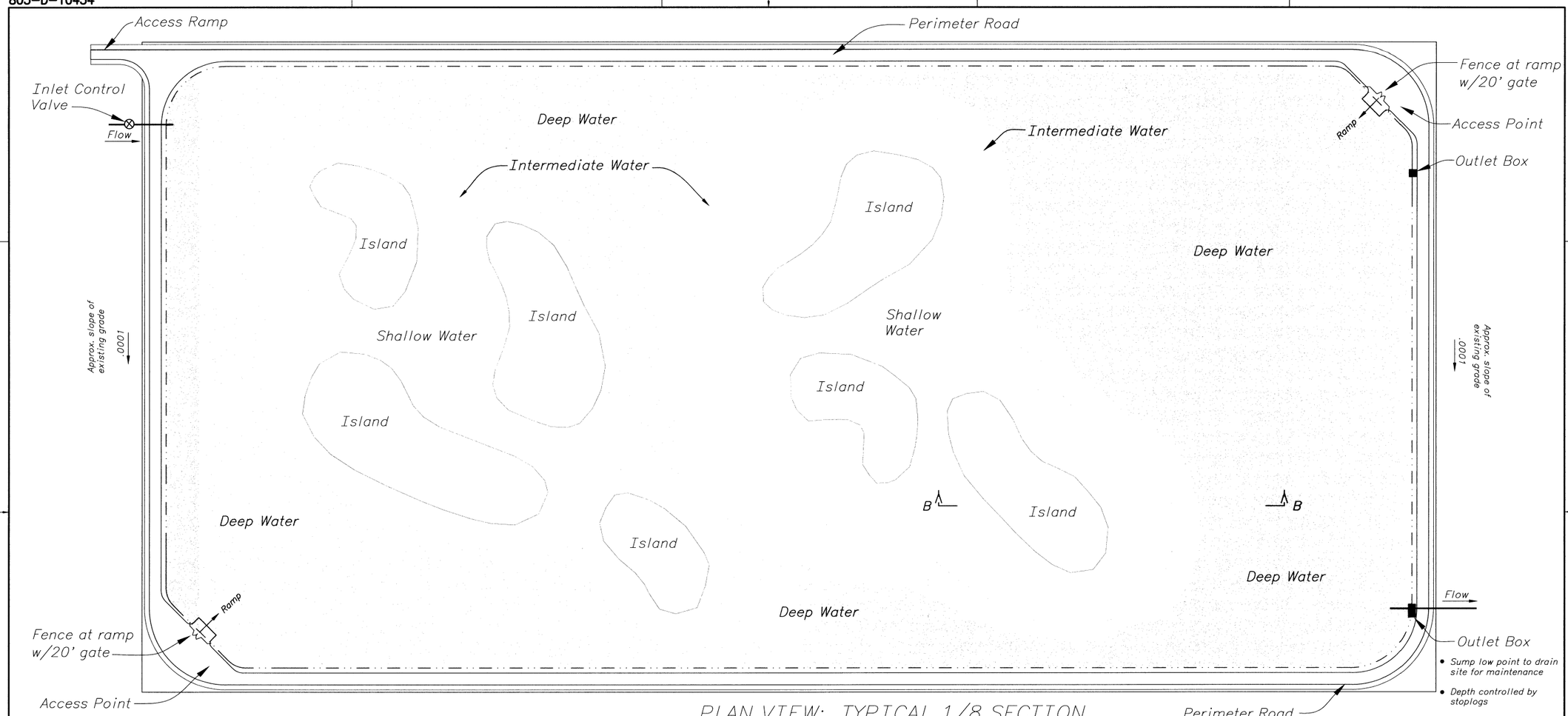

PLAN VIEW: TYPICAL 1/8 SECTION

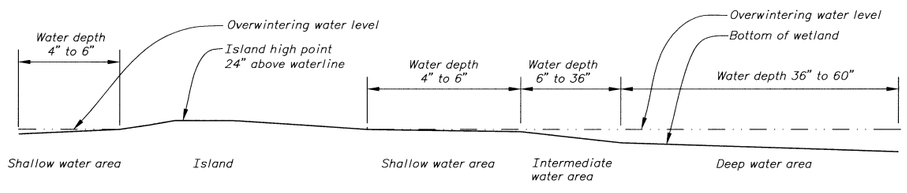

SECTION B–B – DEEP WATER HABITAT

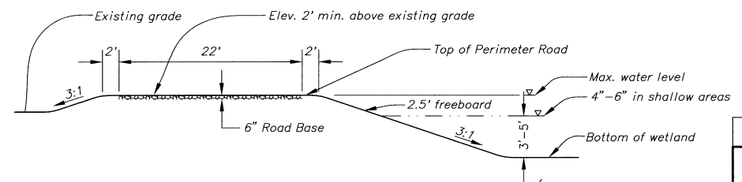

TYPICAL SECTION – PERIMETER BERM/ROAD

100 0 100 200 300
SCALE OF FEET

COMPENSATION HABITAT – DEEP WATER

Features include:

Topography suitable for overwintering dabbling and diving bird habitat
Maximum water depth of 5' in deep zone
Ratio of deep:shallow water = 5:1 for potential shorebird zones

SHALLOW WATER

- Benches 4"–6" below waterline
- Flat or very genlty sloped benches

INTERMEDIATE WATER

- Surrounds island groupings
- Transition zone from 6" to 36" water depth

DEEP WATER

- Zone of 36"–60" water depth
- Large areas of open water

ISLANDS

- Top of islands 24" above waterline
- Banks sloped 12:1 for shorebirds

ALWAYS THINK **SAFETY**

UNITED STATES
DEPARTMENT OF THE INTERIOR
BUREAU OF RECLAMATION
CENTRAL VALLEY PROJECT
WEST SAN JOAQUIN DIVISION – SAN LUIS UNIT – CALIFORNIA

DRAINAGE FEATURE RE–EVALUATION FEASIBILITY STUDY

NORTHERLY AREA AND WESTLANDS WATER DISTRICT

COMPENSATION HABITAT – DEEP WATER
REPRESENTATIVE SITE PLAN LAYOUT

DESIGNED BY Mary Lou Pierce
REVIEWED BY

DENVER, COLORADO SHEET 1 OF 1 2006-01-06 **805–D–10434**

JUN 0 3 2007

CAD SYSTEM AutoCAD Rel. 16.0s
CAD FILENAME SAN LUIS DRAIN COMPENSATION DEEP.DWG
DATE AND TIME PLOTTED MAY 31, 2006 13:15
PLOTTED BY MLPIERCE

805-D-10435

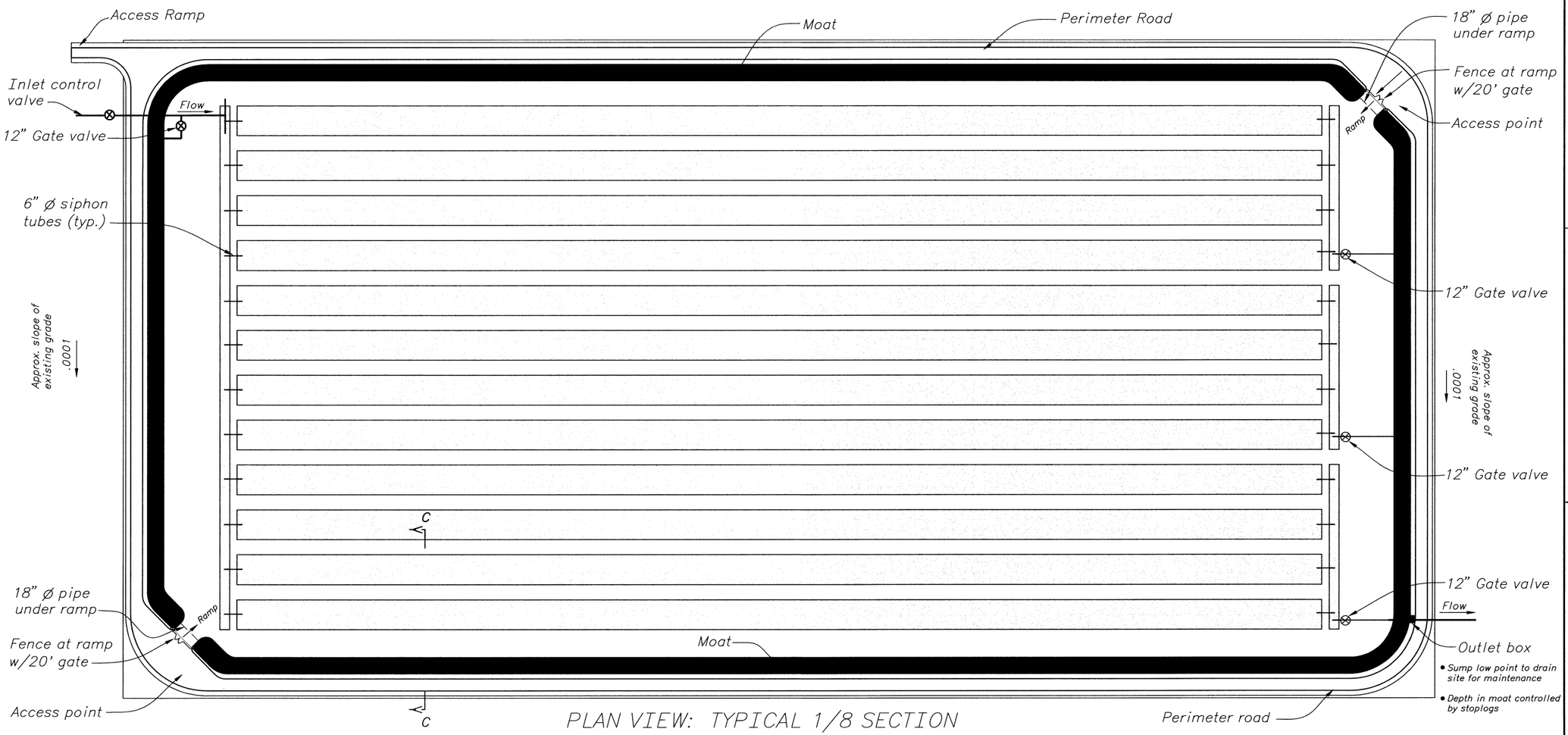

PLAN VIEW: TYPICAL 1/8 SECTION

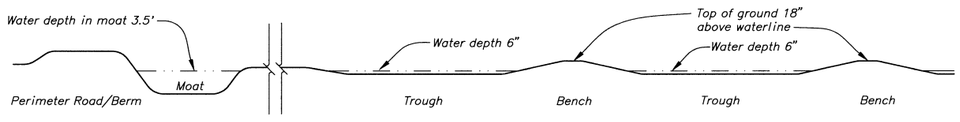

SECTION C–C

Vertical scale exaggerated

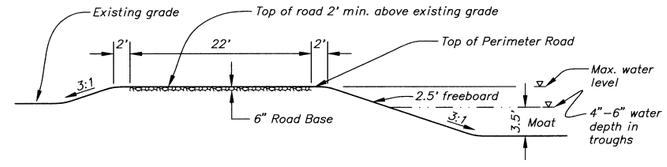

TYPICAL SECTION – PERIMETER BERM/ROAD

COMPENSATION HABITAT – SHALLOW WATER

Features include:

Topography suitable for shorebird nesting/feeding

Shallow water areas – 4"–6" deep

Maximum water depth of 12" in channels

MOAT

- Moat sloped to drain to site low points at outlets
- Moat 3.5' deep, 35' wide, steep slopes for predator control

BENCHES

- Top of benches 18" above waterline
- Banks sloped 12:1 for shorebirds

SHALLOW WATER

- Bottom of troughs 6" below waterline
- Underwater banks sloped less than 12:1

100 0 100 200 300
SCALE OF FEET

ALWAYS THINK SAFETY

UNITED STATES
DEPARTMENT OF THE INTERIOR
BUREAU OF RECLAMATION
CENTRAL VALLEY PROJECT

WEST SAN JOAQUIN DIVISION – SAN LUIS UNIT – CALIFORNIA

DRAINAGE FEATURE RE–EVALUATION FEASIBILITY STUDY

NORTHERLY AREA AND WESTLANDS WATER DISTRICT

COMPENSATION HABITAT – SHALLOW WATER REPRESENTATIVE SITE PLAN LAYOUT

DESIGNED BY Mary Lou Pierce

REVIEWED BY

DENVER, COLORADO 2006-01-06 SHEET 1 OF 1

805-D-10435

CAD SYSTEM AutoCAD Rel. 16.0a
CAD FILENAME SAN LUIS DRAIN COMPENSATION SHALLOW.DWG
DATE AND TIME PLOTTED MAY 11, 2006 09:02
PLOTTED BY MLPERCE

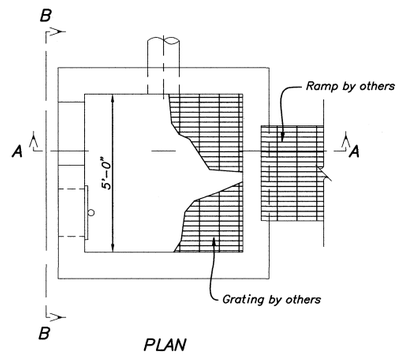

PLAN

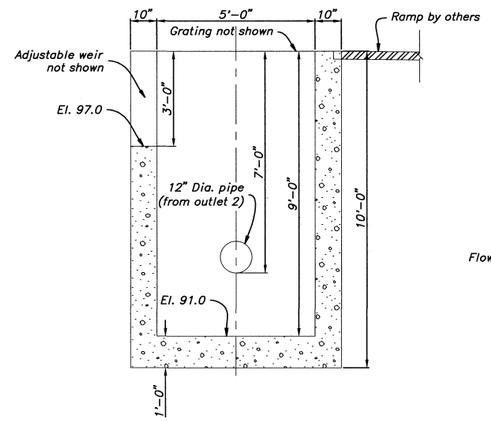

SECTION A–A

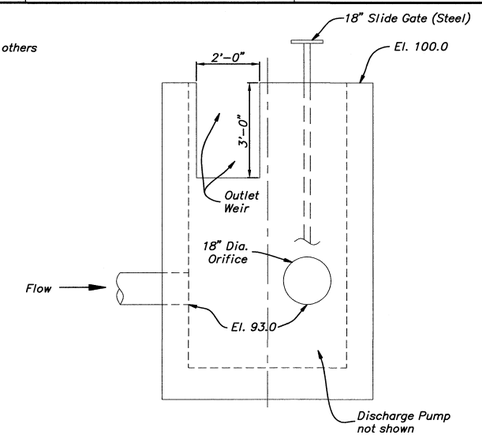

SECTION B–B

OUTLET STRUCTURE TYPE 1

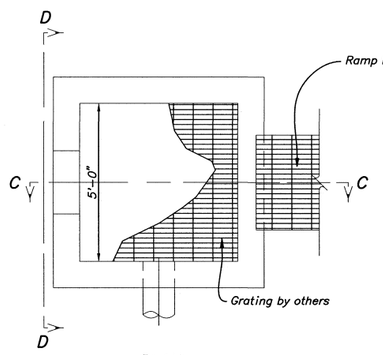

PLAN

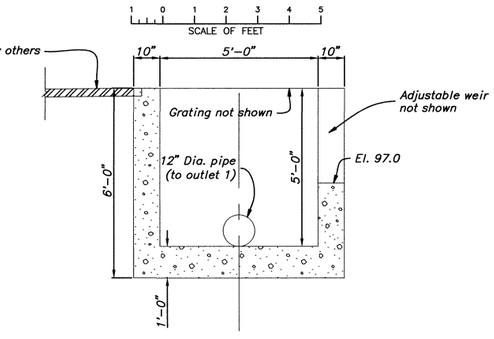

SECTION C–C

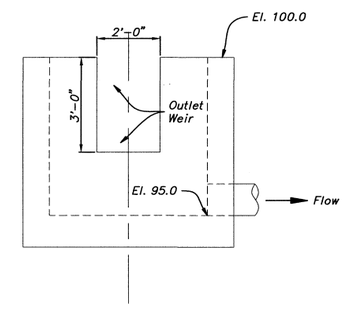

SECTION D–D

OUTLET STRUCTURE TYPE 2

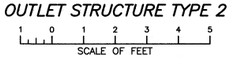

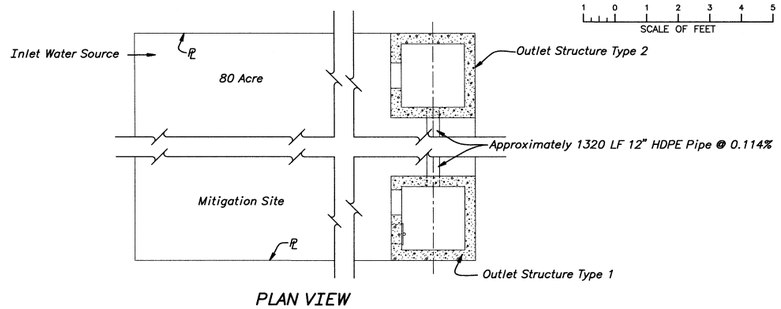

PLAN VIEW
N.T.S.

QUANTITIES

Outlet Structure #1

Concrete	8.0	CY
Steel	1000	LBS (120lb per CY Conc)

Outlet Structure #2

Concrete	5.2	CY
Steel	640	LBS (120lb per CY Conc)

Other

12" HDPE PIPE	1320	LF
Ecavation	Included in Pond Grading	
Backfill	Included in Pond Grading	
1 CFS Pump	1	each
5 CFS Pump	1	each
18" Gate Valve	1	each
2' x 3' Adj. Weir	2	each
Inlet Stand Pipe and 6" valve	1	each
Water Meter	1	each

NOTES

1. Steel reinforcement is assumed to be 2 layers of #5 @ 1'-0".
2. A datum elevation of 100.00 at the top of the concrete outlet structures has been set arbitrarily. Actual elevations will vary.
3. The outlet weirs have been designed to allow pond water surface elevation to vary 2 feet with 1 foot of freeboard.
4. Hydrology has been determined as follows:
   Q(flush) = 1 cfs
   Q(drain) = 6 cfs (for approx. 2 weeks)
5. Mitigation Ponds require (1) Outlet Structure Type 1 and (1) Outlet Structure Type 2, unless otherwise noted.

OUTLET PIPE GENERAL INFORMATION

Mitigation Site	Number of Mitigation Ponds	Flow	Static	TDH	Water Surface Elevation Inlet	Water Surface Elevation Outlet	Number of Pumps	Discharge Pipeline Dia.	Discharge Pipeline Length
WS–AH1	1	6	10	15.2	91.0	101.0	1	12	100
WC–AH1	2	12	10	15.2	91.0	101.0	2	12	100
WN–AH1	1	6	10	15.2	91.0	101.0	1	12	100
NA–AH1	4	24	10	15.2	91.0	101.0	4	12	100
WN–OH4	4+1*	24	10	21.2	91.0	101.0	4	24	11,880
WC–OH2		24	10	13.8	91.0	101.0	4	24	3,960
WN–EH8		24	10	17.5	91.0	101.0	4	24	7,920

* This mitigation pond requires (1) Outlet Structure Type 1 only.

ALWAYS THINK SAFETY

U.S. DEPARTMENT OF THE INTERIOR
BUREAU OF RECLAMATION
CENTRAL VALLEY PROJECT
WEST SAN JOAQUIN DIVISION – SAN LUIS UNIT – CALIFORNIA

DRAINAGE FEATURE
RE-EVALUATION FEASIBILITY STUDY
NORTHERLY AREAS AND WESTLANDS WATER DISTRICT
MITIGATION SITE WATER SUPPLY SYSTEMS
WIER OUTLET STRUCTURES
PLAN AND SECTIONS

DESIGNED – Nicholas W. Clark
REVIEWED BY – Wayne C. Bell
WATER CONVEYANCE GROUP

DENVER, CO SHEET 1 OF 1 2006-04-01 805-D-10436

DATE AND TIME PLOTTED
JULY 14, 2007 15:28
PLOTTED BY
COURE

CAD SYSTEM
AutoCAD Rel. 16.1s
CAD FILENAME
SW LUIS MITIGATIONLONG

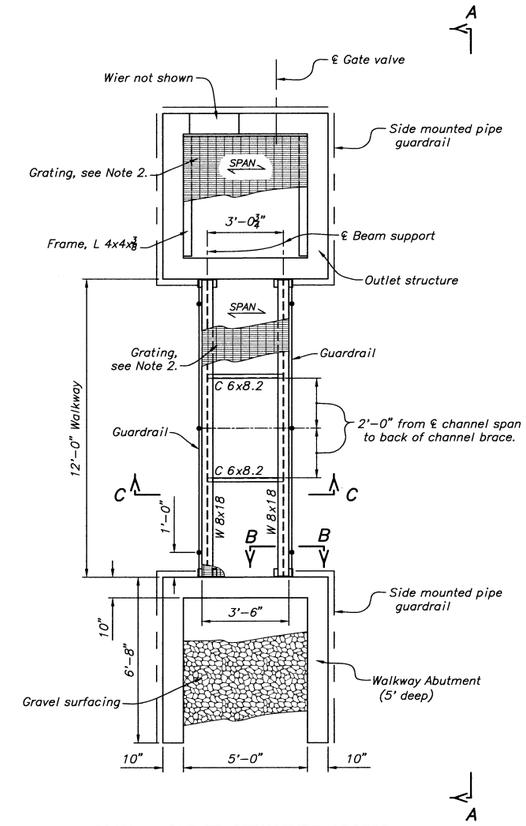

PLAN – OUTLET STRUCTURE ACCESS

26 REQ'D., WALKWAYS
26 REQ'D., FRAME AND GRATING
(TWO PER POND AND 13 PONDS)
DESIGN LIVE LOAD IS 100 PSF.

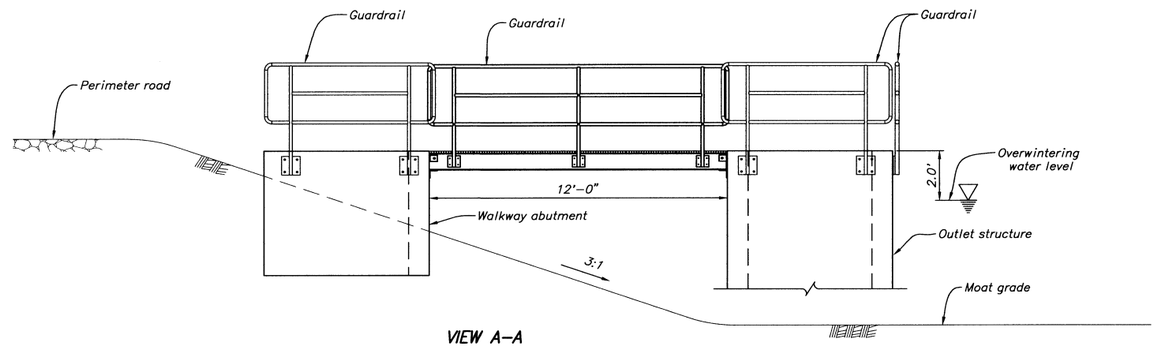

VIEW A–A
OUTLET STRUCTURE ACCESS

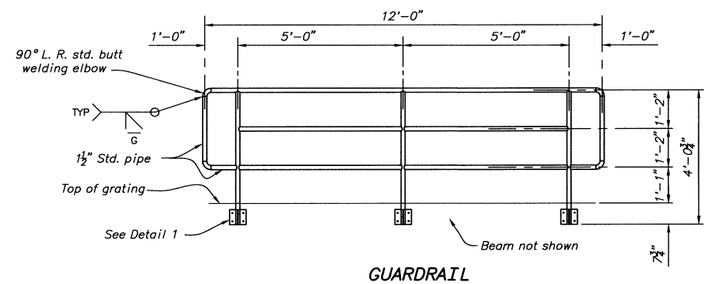

GUARDRAIL
52 REQ'D. FOR WALKWAYS

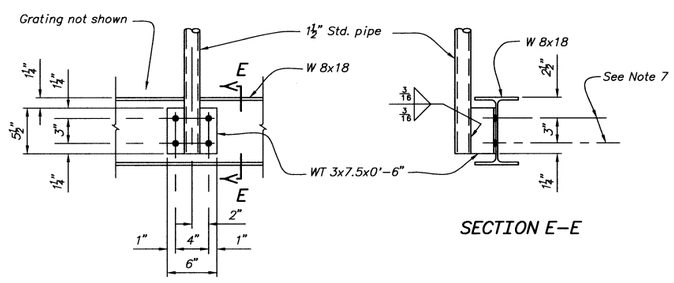

DETAIL 1

SECTION E–E

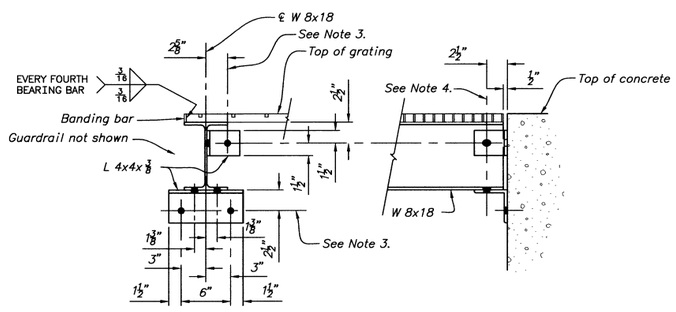

SECTION B–B

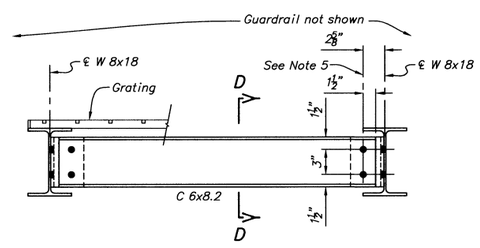

SECTION C–C

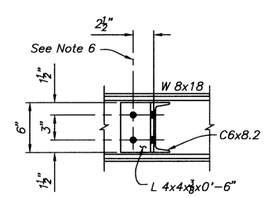

SECTION D–D

NOTES

1. For General Notes, see (XXX).

2. Use grating with bearing bars 1"x⅛" @ 1 3/16" centers and cross bars @ 4" centers. Banding bars same size as bearing bars. Provide grating panels in widths not to exceed 4'–0". Allow ¼" between panels. Fasten each grating panel with four standard clips and ½" ø threaded stud bolts with hex. nuts and std. washers.

3. ℄ 13/16"ø Holes for ⅝"ø adhesive anchors with 5" minimum embedment.

4. ℄ 13/16"ø Holes in angles and 11/16"x1" slotted holes in W 8x18 for ⅝"ø hex. hd. bolts with hex. nuts and std. washers. Tighten bolts snug tight.

5. ℄ 11/16"ø Holes in angles and holes in C 6x8.2 for ⅝"ø hex. hd. bolts with hex. nuts and std. washers.

6. ℄ 11/16"ø Holes in angles W 8x18 for ⅝"ø hex. hd. bolts with hex. nuts and std. washers.

7. ℄ 13/16"ø Holes in WT or bent plate and 11/16"x1" slotted holes in W 8x18 for ⅝"ø hex. hd. bolts with hex. nuts and std. washers (Gage for WT=3½").

ALWAYS THINK SAFETY

UNITED STATES
DEPARTMENT OF THE INTERIOR
BUREAU OF RECLAMATION
CENTRAL VALLEY PROJECT
WEST SAN JOAQUIN DIVISION – SAN LUIS UNIT – CALIFORNIA

DRAINAGE FEATURE RE–EVALUATION FEASIBILITY STUDY

WESTLANDS WATER DISTRICT – NORTHERLY AREA

MITIGATION SITE WATER SUPPLY SYSTEMS
OUTLET STRUCTURE ACCESS RAMPS

DESIGNED BY
REVIEWED BY D.R. Oestman, P.E.

DENVER, COLORADO
SHEET 1 OF 1
2006-03-07
805-D-10437

CAD SYSTEM
CAD FILENAME
DATE AND TIME PLOTTED
PLOTTED BY

805-D-10438

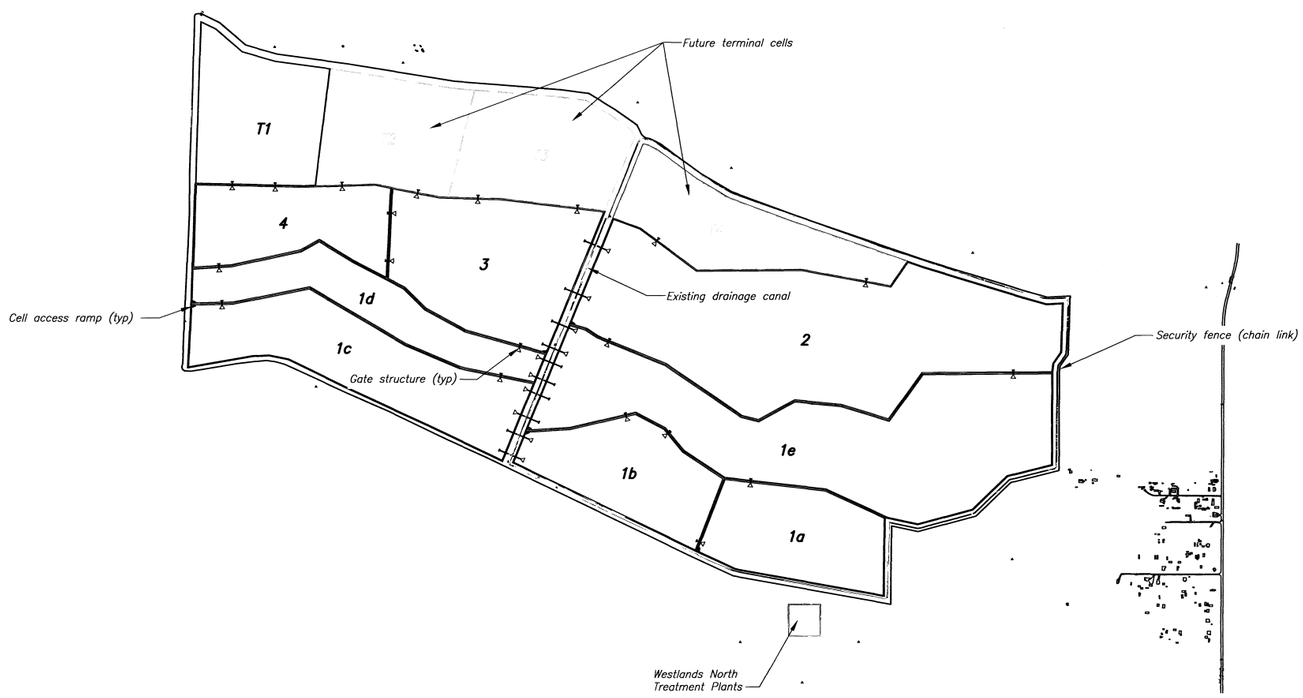

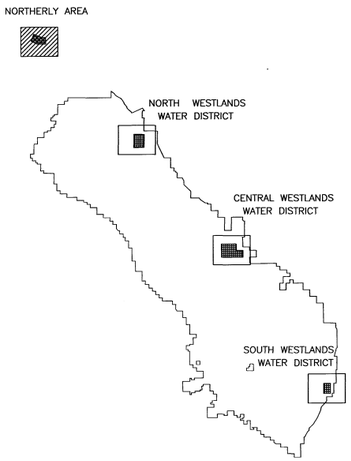

N

1000 0 1000 2000 3000
SCALE OF FEET

LEGEND

.....Gate Structure Symbol
(Shown not to scale)

NOTES

1. Evaporation pond cells 1a, 1b, 1c, 1d, 1e, 2, 3, 4 are designated as concentrating cells.
2. Evaporation pond cell T1 will be initial terminal cell with cells T2, T3 and T4 to be constructed at a later date.

ALWAYS THINK SAFETY

UNITED STATES
DEPARTMENT OF THE INTERIOR
BUREAU OF RECLAMATION
CENTRAL VALLEY PROJECT – CALIFORNIA – SAN LUIS UNIT
WEST SAN JOAQUIN DIVISION

DRAINAGE FEATURE RE-EVALUATION FEASIBILITY STUDY

NORTHERLY AREA

EVAPORATION POND LAYOUT

DESIGNED BY
REVIEWED BY

CADD SYSTEM	CADD FILENAME
AutoCAD Rel. 16.0s (LMS Tech)	NORTHERLY AREA_MASTER3.DWG
DENVER, COLORADO APRIL 28, 2006	805-D-10438

DATE AND TIME PLOTTED
MAY 9, 2007 12:18
PLOTTED BY
CSTRICKL

805-D-10439

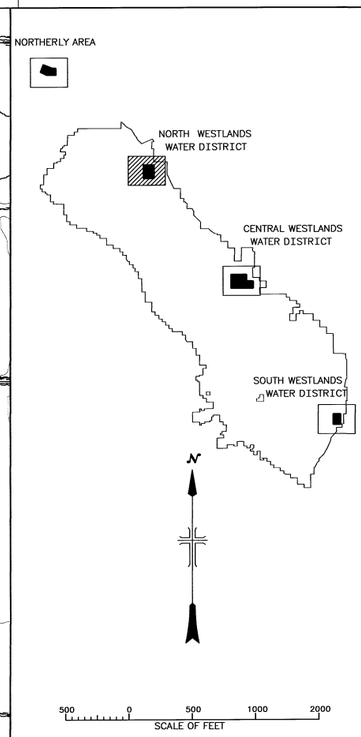

LEGEND

▷ .....Gate Structure Symbol
(Shown not to scale)

NOTES

1. Evaporation pond cells 1a, 1b, 1c, 2, 3, 4 are designated as concentrating cells.
2. Evaporation pond cell T1 will be initial terminal cell with cells T2, T3 and T4 to be constructed at a later date.

ALWAYS THINK SAFETY

UNITED STATES
DEPARTMENT OF THE INTERIOR
BUREAU OF RECLAMATION
CENTRAL VALLEY PROJECT – CALIFORNIA – SAN LUIS UNIT
WEST SAN JOAQUIN DIVISION

DRAINAGE FEATURE RE-EVALUATION FEASIBILITY STUDY

WESTLANDS WATER DISTRICT – NORTH

EVACUATION POND LAYOUT

DESIGNED BY
REVIEWED BY

CADD SYSTEM AutoCAD Rel. 16.0s (LMS Tech)	CADD FILENAME WI-N-MASTER.DWG	
DENVER, COLORADO	APRIL 28, 2006	805-D-10439

DATE AND TIME PLOTTED
MAY 8, 2007 12:19
PLOTTED BY
CSTRICK

805-D-10440

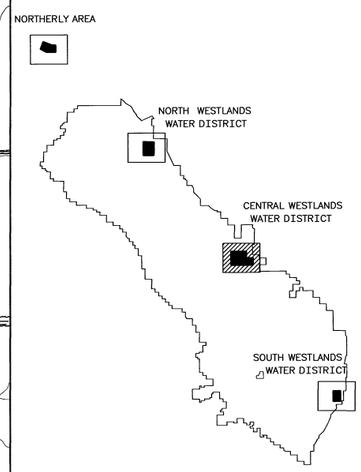

N

500 0 500 1000 2000
SCALE OF FEET

LEGEND

.....Gate Structure Symbol
(Shown not to scale)

NOTES

1. Evaporation pond cells 1a, 1b, 1c, 2, 3, 4 are designated as concentrating cells.
2. Evaporation pond cell T1 will be initial terminal cell with cells T2, T3 and T4 to be constructed at a later date.

ALWAYS THINK SAFETY

UNITED STATES
DEPARTMENT OF THE INTERIOR
BUREAU OF RECLAMATION
CENTRAL VALLEY PROJECT – CALIFORNIA – SAN LUIS UNIT
WEST SAN JOAQUIN DIVISION

DRAINAGE FEATURE RE-EVALUATION FEASIBILITY STUDY

WESTLANDS WATER DISTRICT – CENTRAL

EVAPORATION POND LAYOUT

DESIGNED BY

REVIEWED BY

CADD SYSTEM	CADD FILENAME
AutoCAD Rel. 16.0s (LMS Tech)	WL-C-MASTER.DWG
DENVER, COLORADO — APRIL 28, 2006	805-D-10440

DATE AND TIME PLOTTED
MAY 9, 2007 12:13
PLOTTED BY
CSTRICKL

805-D-10441

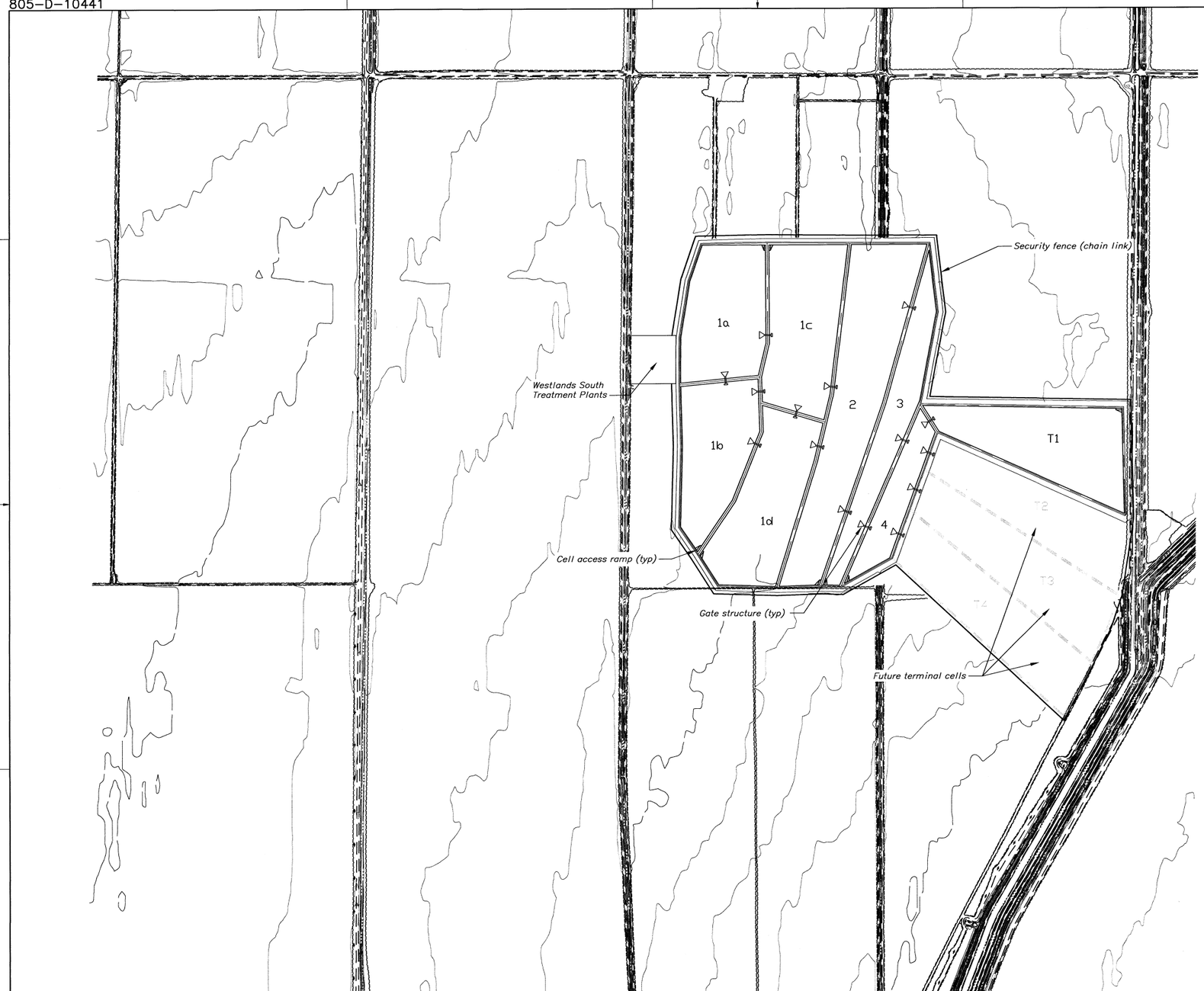

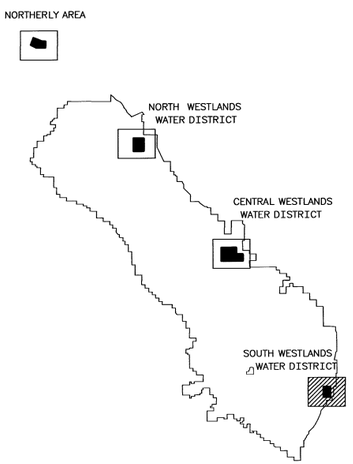

N

500 0 500 1000 2000
SCALE OF FEET

LEGEND

.....Gate Structure Symbol
(Shown not to scale)

NOTES

1. Evaporation pond cells 1a, 1b, 1c, 1d, 2, 3, 4 are designated as concentrating cells.
2. Evaporation pond cell T1 will be initial terminal cell with cells T2, T3 and T4 to be constructed at a later date.

ALWAYS THINK SAFETY

UNITED STATES
DEPARTMENT OF THE INTERIOR
BUREAU OF RECLAMATION
CENTRAL VALLEY PROJECT – CALIFORNIA – SAN LUIS UNIT
WEST SAN JOAQUIN DIVISION

DRAINAGE FEATURE RE-EVALUATION FEASIBILITY STUDY

WESTLANDS WATER DISTRICT – SOUTH

EVAPORATION POND LAYOUT

DESIGNED BY
REVIEWED BY

CADD SYSTEM	CADD FILENAME	
AutoCAD Rel. 16.0s (LMS Tech)	WL-S-MASTER.DWG	
DENVER, COLORADO	APRIL 28, 2006	805-D-10441

DATE AND TIME PLOTTED
MAY 8, 2007 12:18
PLOTTED BY
CSTRICKL

805-D-10442

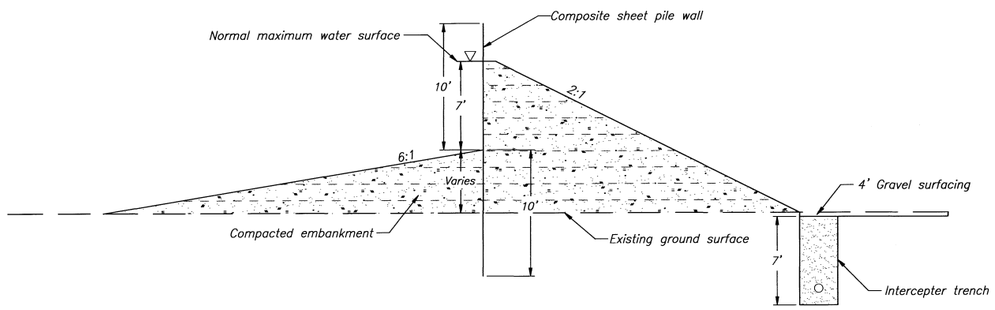

PERIMETER WALL

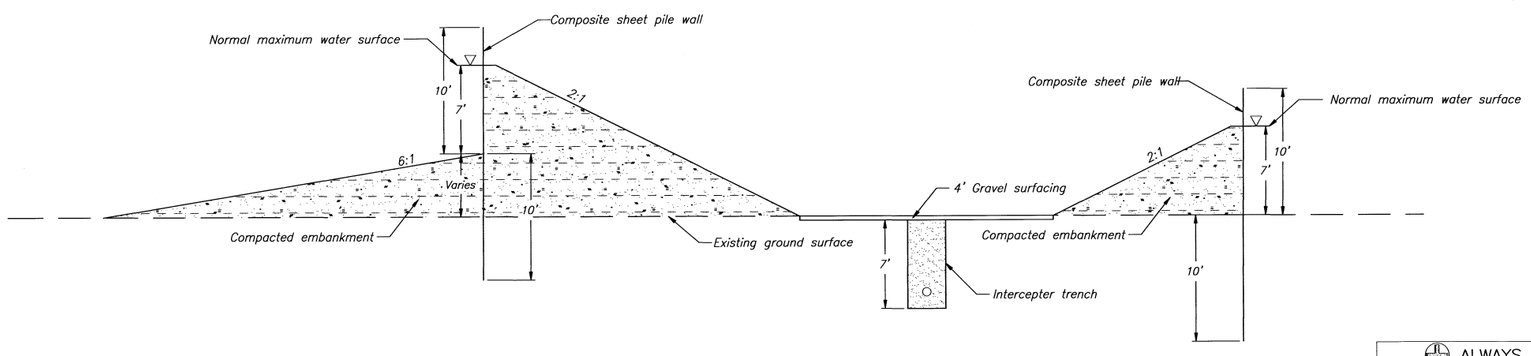

INTERIOR WALL SECTION

60 0 60 120 180
SCALE OF FEET

ALWAYS THINK SAFETY

UNITED STATES
DEPARTMENT OF THE INTERIOR
BUREAU OF RECLAMATION
CENTRAL VALLEY PROJECT – CALIFORNIA – SAN JUIS UNIT
WEST SAN JOAQUIN DIVISION
SAN LUIS DRAINAGE PROJECT

PERIMETER WALL AND INTERIOR
SHEET PILE OPTION

DESIGNED BY
REVIEWED BY

DENVER, COLORADO MAY 03, 2006
SHEET 1 OF 1

805-D-10442

CAD SYSTEM
AutoCAD Rel. 16.0s (LMS Tech)
CAD FILENAME
SECTION OPTIONS FOR FIGURES.DWG
DATE AND TIME PLOTTED
MAY 03, 2007 15:49
PLOTTED BY
CSTROOL

805-D-10443

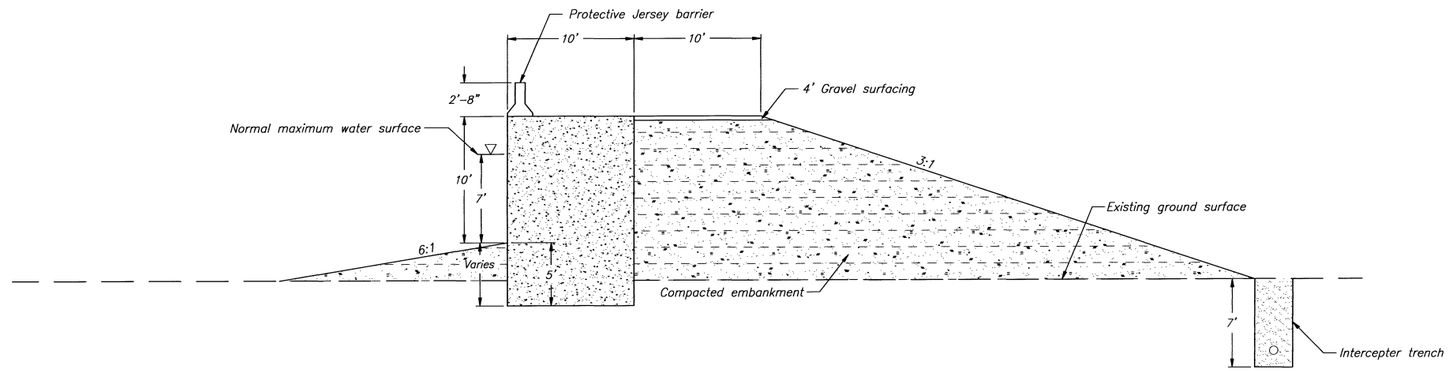

PERIMETER WALL

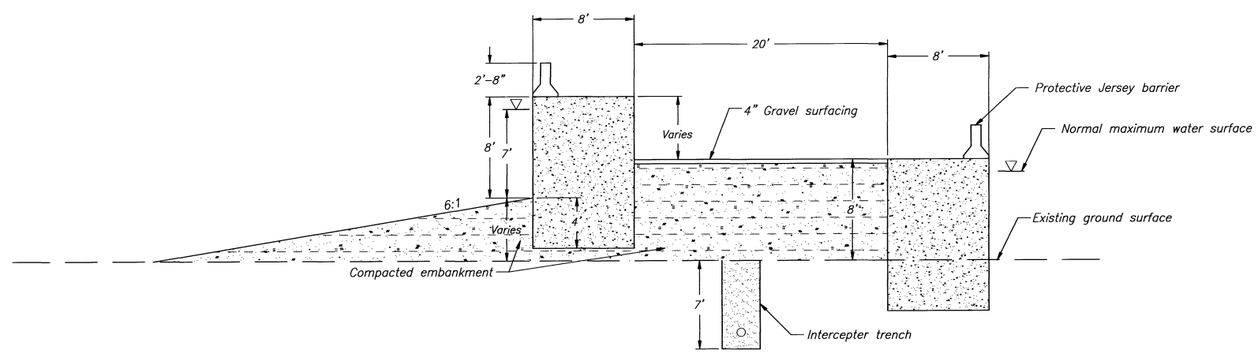

INTERIOR WALL SECTION

60 0 60 120 180
SCALE OF FEET

ALWAYS THINK SAFETY

UNITED STATES
DEPARTMENT OF THE INTERIOR
BUREAU OF RECLAMATION
CENTAL VALLEY PROJECT – CALIFORNIA – SAN LUIS UNIT
WEST SAN JOAQUIN DIVISION
SAN LUIS DRAINAGE PROJECT

CROSS SECTIONS FOR WALLS
PERIMETER AND INTERIOR WALLS
CEMENT-BENTONITE OPTION

DESIGNED BY
REVIEWED BY

DENVER, CO OCTOBER 12, 2005
SHEET 1 OF 1
805-D-10443

CAD SYSTEM
AutoCAD Rel. 16.0s (LMS Tech)
CAD FILENAME
SECTION OPTIONS FOR FIGURES.DWG
DATE AND TIME PLOTTED
Mar 15, 2005 - 12:49
PLOTTED BY
CSTROUL

805-D-10444

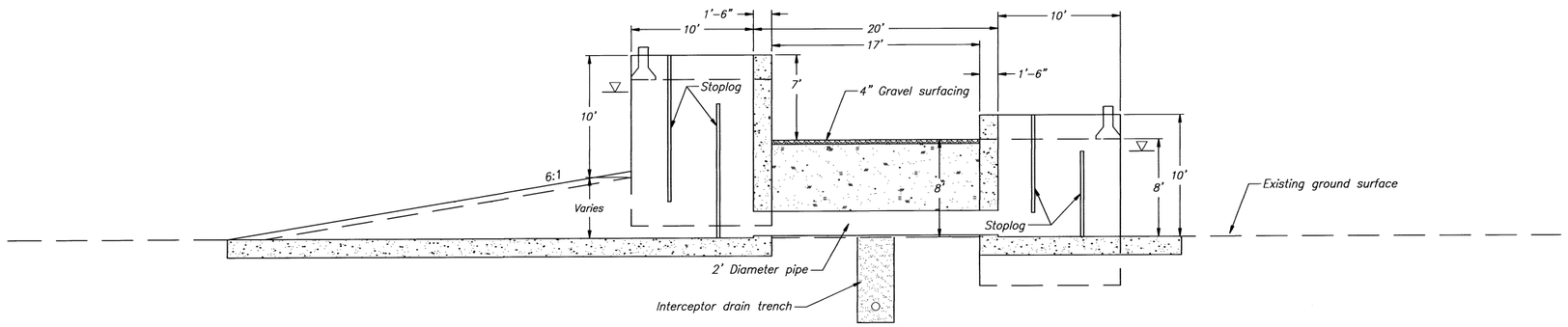

SECTION

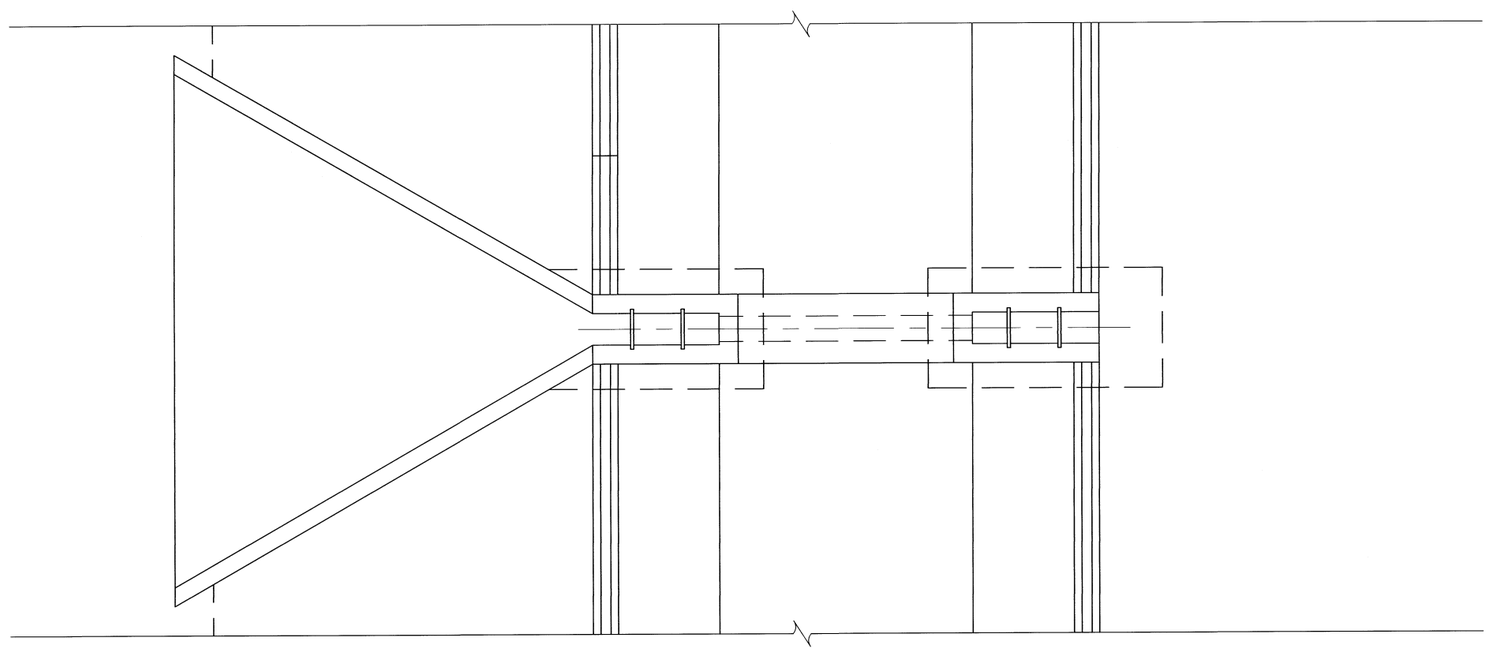

PLAN

10 0 10 20 30
SCALE OF FEET

ALWAYS THINK SAFETY

UNITED STATES
DEPARTMENT OF THE INTERIOR
BUREAU OF RECLAMATION
CENTRAL VALLEY PROJECT – CALIFORNIA – SAN LUIS UNIT
WEST SAN JOAQUIN DIVISION
SAN LUIS DRAINAGE PROJECT

PLAN AND SECTION
GATE STRUCTURE

DESIGNED BY
REVIEWED BY

DENVER, CO OCTOBER 12, 2005
SHEET 1 OF 1

805-D-10444

CAD SYSTEM
AutoCAD R14.01 (LMS Test)
CAD FILENAME
SECTION OPTIONS FOR FIGURESLDWG
DATE AND TIME PLOTTED
MAY 10, 2006 1:43
PLOTTED BY
CSTROAL

805–D–10448

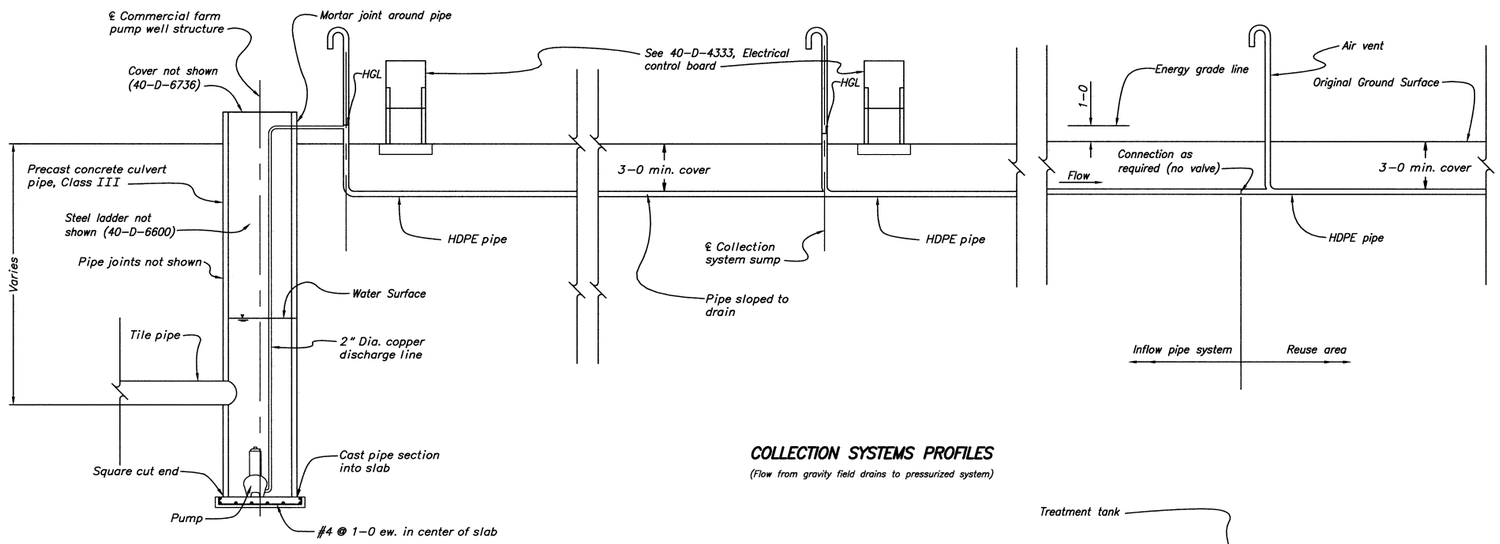

COLLECTION SYSTEMS PROFILES

(Flow from gravity field drains to pressurized system)

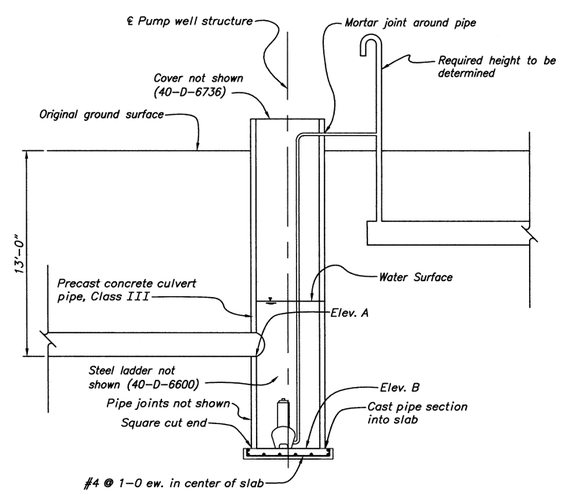

REUSE AREA PUMPING PLANT (see Notes)

CONVEYANCE SYSTEMS PROFILES

(Flow from pressurized system to reuse and treatment facilities)

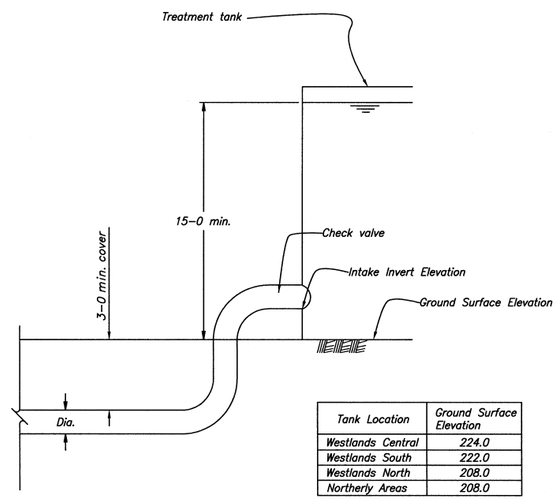

Tank Location	Ground Surface Elevation
Westlands Central	224.0
Westlands South	222.0
Westlands North	208.0
Northerly Areas	208.0

TREATMENT AND EVAPORATION POND INLET

NOTES

1. See Table 44 and Table 45 for pumping plant data.
2. See topography maps 1 to 13 for system plan view.
3. Commercial Farm Sump Pump not included in project work.

ALWAYS THINK SAFETY

U.S. DEPARTMENT OF THE INTERIOR
BUREAU OF RECLAMATION
CENTRAL VALLEY PROJECT
WEST SAN JOAQUIN DIVISION – SAN LUIS UNIT – CALIFORNIA
DRAINAGE FEATURE
RE–EVALUATION FEASIBILITY STUDY
NORTHERLY AREAS AND WESTLANDS WATER DISTRICT
COLLECTION AND CONVEYANCE SYSTEMS

TYPICAL PROFILES

DESIGNED
REVIEWED BY
WATER CONVEYANCE GROUP

DENVER, CO 2005–09–14 SHEET 1 OF 1 805–D–10448

DATE AND TIME PLOTTED JULY 13, 2007 13:25
PLOTTED BY CDUKE

CAD SYSTEM AutoCAD Rel. 16.1s
CAD FILNAME TYPICAL DRAIN TO PRESSURE REV 4_25.DWG

805-D-10449

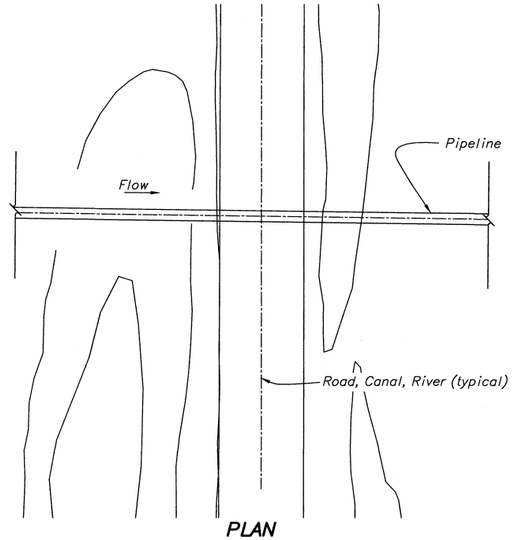

PLAN
(Typical)

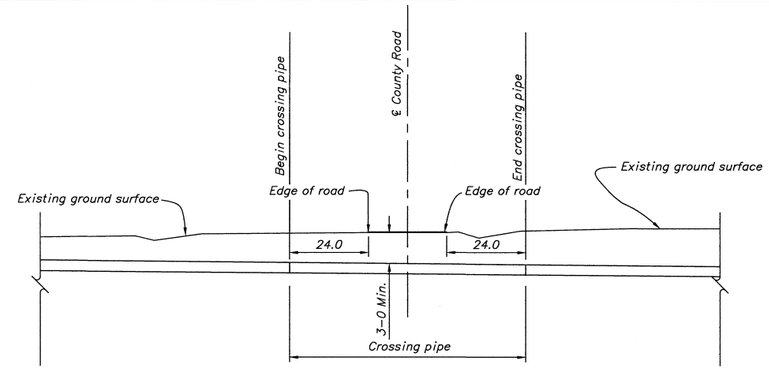

PROFILE
(Open cut road typical crossing)

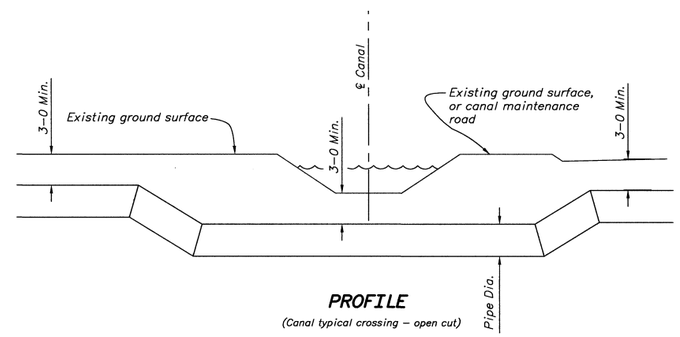

PROFILE
(Canal typical crossing – open cut)

NOTES

1. For ROW fencing details, see specification paragraphs.

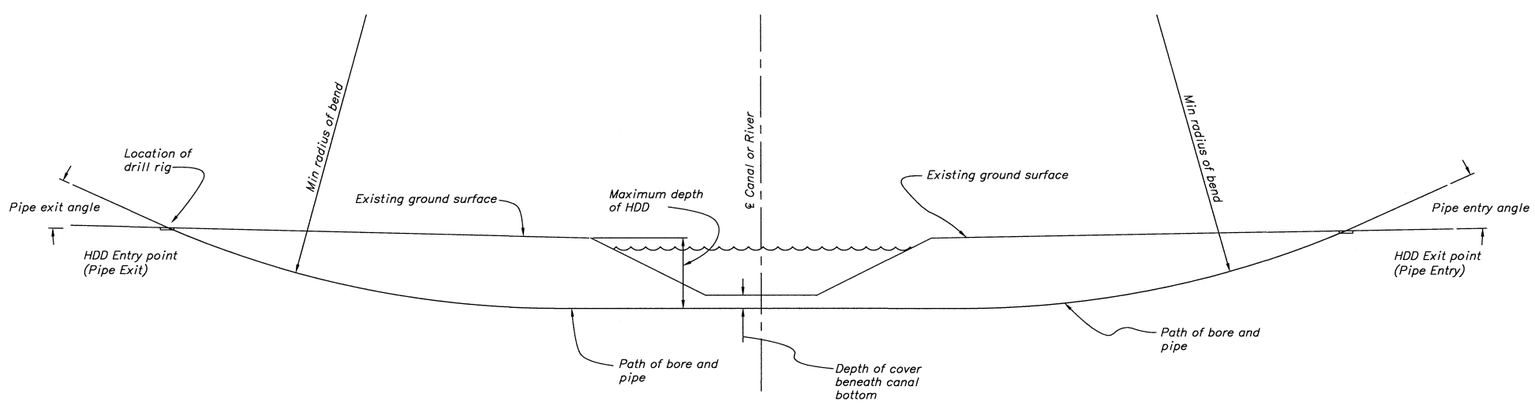

PROFILE
(Horizontal Directional Drilling typical crossing)

ALWAYS THINK SAFETY

U.S. DEPARTMENT OF THE INTERIOR
BUREAU OF RECLAMATION
CENTRAL VALLEY PROJECT
WEST SAN JOAQUIN DIVISION – SAN LUIS UNIT – CALIFORNIA

DRAINAGE FEATURE
RE-EVALUATION FEASIBILITY STUDY
NORTHERLY AREAS AND WESTLANDS WATER DISTRICT
ROAD, CANAL AND RIVER CROSSINGS
PLAN AND PROFILES

DESIGNED – Wafa Ce Dell
REVIEWED BY – Vestal R. Calhoun
WATER CONVEYANCE GROUP

DENVER, CO 2005-09-14 SHEET 1 OF 1 805-D-10449

DATE AND TIME PLOTTED JUL 14, 2007 14:42
PLOTTED BY COURE

CAD SYSTEM AutoCAD Rel. 15.0a
CAD FILNAME STANDARD ROAD CROSSING.DWG

805-D-10450

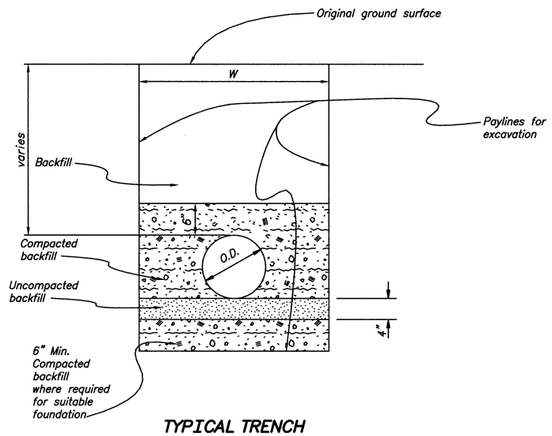

TYPICAL TRENCH SECTION DIAMETER <= 10"

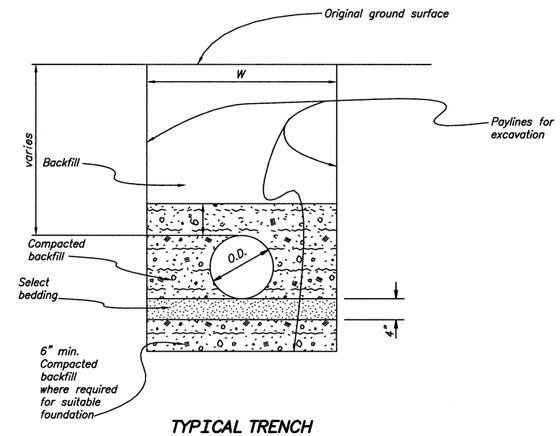

TYPICAL TRENCH SECTION DIAMETER >= 12"

Pipe O.D. (in)	W (ft)
8" or less	2'
10" or greater	3 x O.D.

NOTES

1. Native material used for all backfill.
2. Trench boxes or shoring is required in areas as needed.

ALWAYS THINK **SAFETY**

U.S. DEPARTMENT OF THE INTERIOR
BUREAU OF RECLAMATION

CENTRAL VALLEY PROJECT
WEST SAN JOAQUIN DIVISION – SAN LUIS UNIT – CALIFORNIA

DRAINAGE FEATURE
RE-EVALUATION FEASIBILITY STUDY
NORTHERLY AREAS AND WESTLANDS WATER DISTRICT
TYPICAL TRENCH SECTION

DESIGNED _____
REVIEWED BY _____
WATER CONVEYANCE GROUP

DENVER, CO 2005-09-14 SHEET 1 OF 1 805-D-10450

DATE AND TIME PLOTTED
MAY 15 2007 13:26
PLOTTED BY
COOKE

CAD SYSTEM
AUTOCAD R14.1
CAD FILENAME
TYPICAL DRAIN TO PRESSURE REV 4_25.DWG

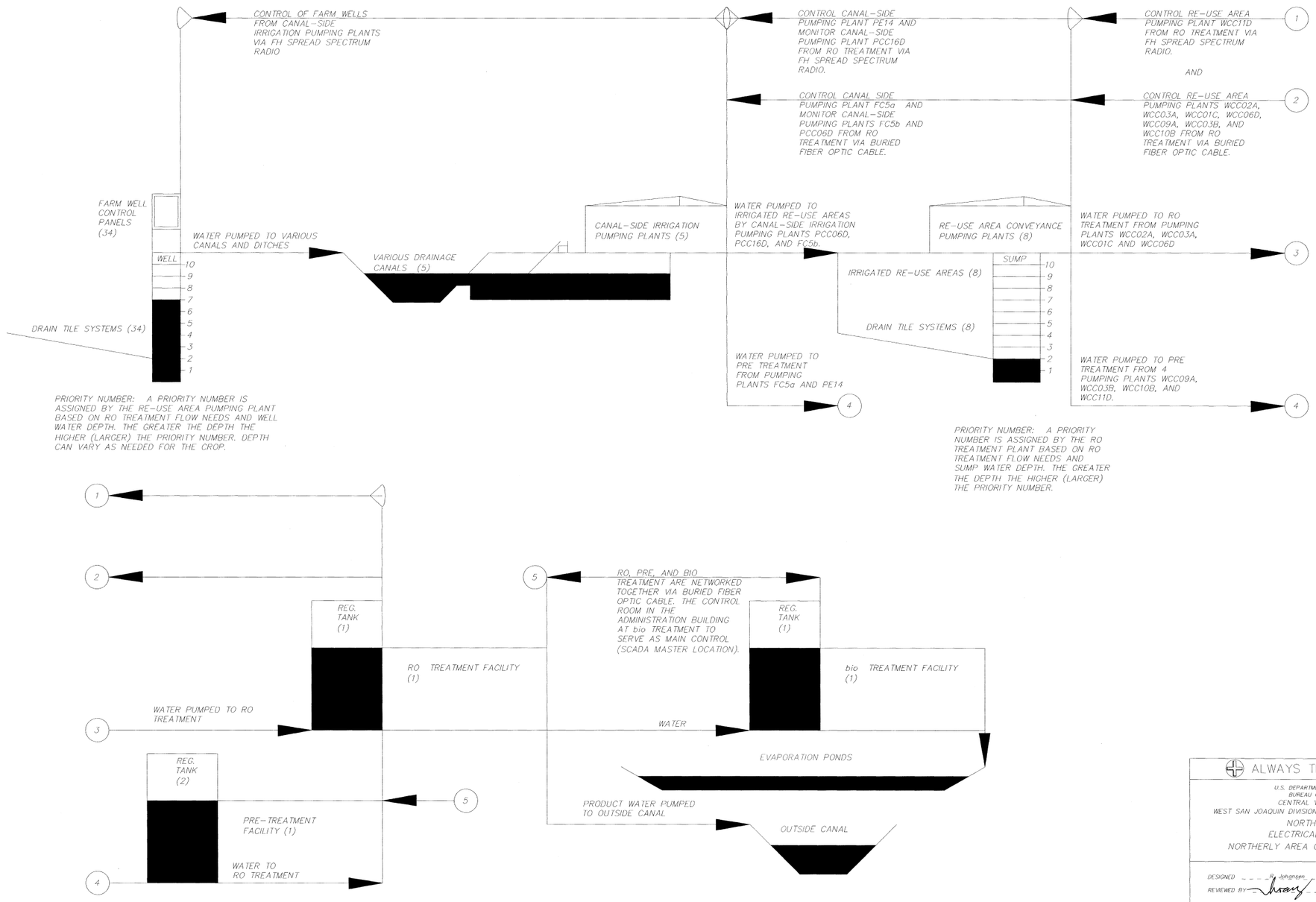

ALWAYS THINK SAFETY

U.S. DEPARTMENT OF THE INTERIOR
BUREAU OF RECLAMATION
CENTRAL VALLEY PROJECT
WEST SAN JOAQUIN DIVISION - SAN LUIS UNIT - CALIFORNIA

NORTHERLY AREA
ELECTRICAL INSTALLATION
NORTHERLY AREA CONTROL FLOW DIAGRAM

DESIGNED R. Johansen
REVIEWED BY

CADD SYSTEM AutoCAD Rel. 16.0s
DENVER, COLORADO
CADD FILENAME 805-D-10454
May 25, 2006
805-D-10451

DATE AND TIME PLOTTED
PLOTTED BY Rohansen

805-D-10452

###1

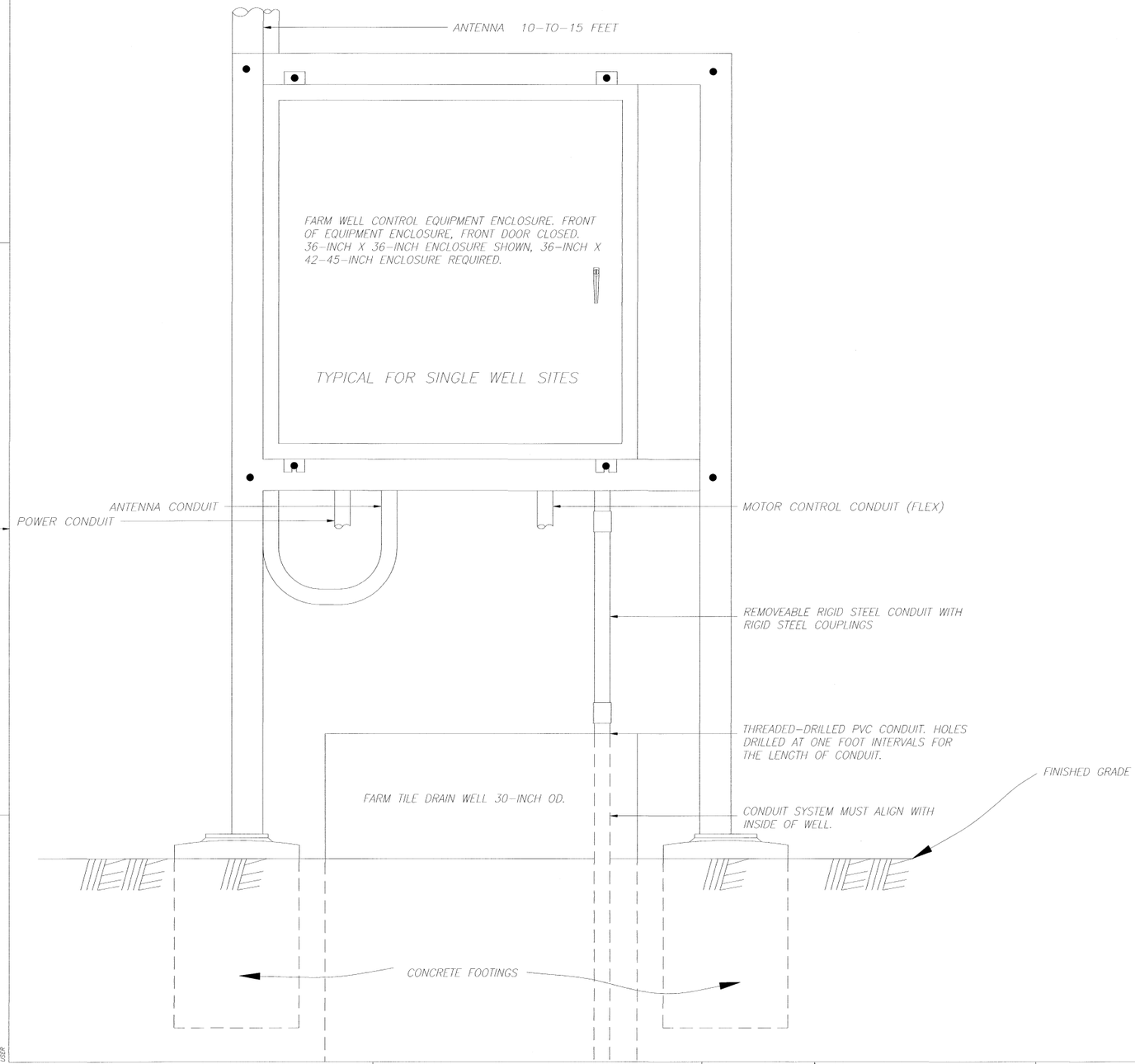

REFERENCE DRAWINGS

FARM WELL CONTROL PANEL LAYOUT — — — — — — — — — — — — — 805-D-10453

NOTES

1. Exact equipment enclosure layouts to be determined by the Contractor based on equipment provided. (Layouts shown are for equipment specified).

2. Probe well rigid steel conduit is converted to PVC conduit at the well surface.

ALWAYS THINK SAFETY

U.S. DEPARTMENT OF THE INTERIOR
BUREAU OF RECLAMATION
CENTRAL VALLEY PROJECT
WEST SAN JOAQUIN DIVISION - SAN LUIS UNIT - CALIFORNIA
DRAINAGE FEATURE RE-EVALUATION FEASIBILITY STUDY
NORTHERLY AREA AND WESTLANDS WATER DISTRICT
ELECTRICAL INSTALLATION
FARM WELL CONTROL PANEL GENERAL ARRANGEMENT

DESIGNED R. Johanson
REVIEWED BY

DENVER, COLORADO May 25, 2006

805-D-10452

SPEC_NO

CAD SYSTEM
CACHS
CAD FILENAME
D10452.dgn
DATE AND TIME PLOTTED
PLOTTED BY
PLOTTED

NAMEPLATES

NO.	DESCRIPTION
1	TEST - OFF - AUTO
2	STOP
3	TEST (START)
4	MOTOR ON
5	MOTOR OVERLOAD

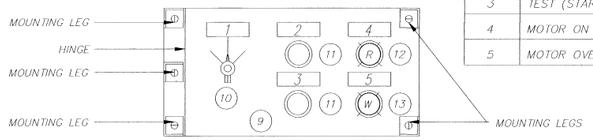

SWITCH, PUSH BUTTON, AND INDICATING LIGHT HINGED-MOUNTING PANEL. 5 MOUNTING LEGS REQUIRED. MOUNTING LEG LENGTH DETERMINED BY CONTRACTOR BASED ON EQUIPMENT SUPPLIED

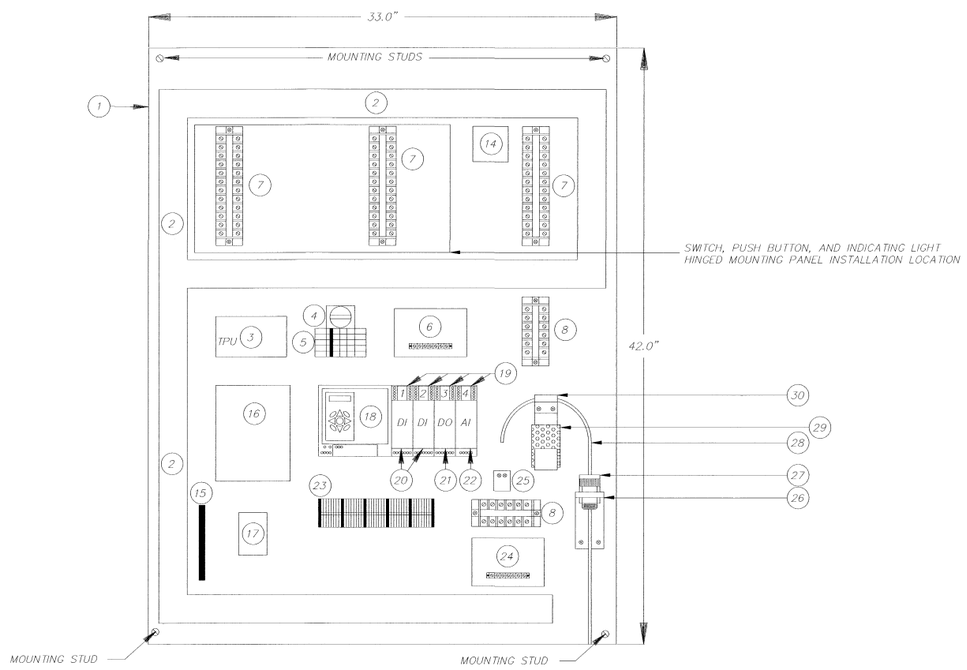

BACK PANEL SHOWN REMOVED FROM EQUIPMENT ENCLOSURE.

FARM WELL CONTROL PANEL BACK PANEL EQUIPMENT LIST

NO.	DESCRIPTION	MANUFACTURER
1	MOUNTING PANEL	ACTUAL PRODUCT SUPPLIED BY THE CONTRACTOR
2	WIRE DUCT	ACTUAL PRODUCT SUPPLIED BY THE CONTRACTOR
3	120 VAC TRANSIENT PROTECTION MODULE	MCG (MCG ELECTRONICS) MODEL 415
4	RTU POWER SWITCH	ALLEN-BRADLEY 194L-A25-1754
5	DIN-RAIL MOUNTED FINGER-SAFE FUSE BLOCKS (4 MINIMUM)	ALLEN - BRADLEY 1492-FB1M30-L
6	DIN-RAIL MOUNTED 24 VDC RTU AND RADIO POWER SUPPLY	ACOPIAN A24MT350
7	12-POSITION FIXED TERMINAL BLOCK	GE-EB
8	6-POSITION FIXED TERMINAL BLOCK	GE-EB
9	HINGED- MOUNTING PANEL	ACTUAL PRODUCT SUPPLIED BY THE CONTRACTOR
10	PUMP MODE SELECTOR SWITCH	ACTUAL PRODUCT SUPPLIED BY THE CONTRACTOR
11	PUSH BUTTON	ACTUAL PRODUCT SUPPLIED BY THE CONTRACTOR
12	INDICATING LIGHT (RED)	ACTUAL PRODUCT SUPPLIED BY THE CONTRACTOR
13	INDICATING LIGHT (WHITE)	ACTUAL PRODUCT SUPPLIED BY THE CONTRACTOR
14	CONTROL RELAY	ACTUAL PRODUCT SUPPLIED BY THE CONTRACTOR
15	GROUNDING BUS BAR	ACTUAL PRODUCT SUPPLIED BY THE CONTRACTOR
16	FH SPREAD SPECTRUM RADIO	ACTUAL PRODUCT SUPPLIED BY THE CONTRACTOR
17	COAXIAL CABLE TRANSIENT PROTECTION MODULE	ACTUAL PRODUCT SUPPLIED BY THE CONTRACTOR
18	RTU	GEOMATION 3300 SERIES RTU
19	I/O BASE	GEOMATION TYPE 7 OR 5 I/O BASE (AS REQUIRED)
20	120 VAC DIGITAL INPUT MODULE	GEOMATION 1204 STAT
21	120 VAC DIGITAL OUTPUT MODULE	GEOMATION 1221 RO
22	4-TO-20 MA ANALOG INPUT MODULE	GEOMATION 1201 mA
23	DIN-RAIL MOUNTED I/O TERMINAL BLOCK	ACTUAL PRODUCT SUPPLIED BY THE CONTRACTOR
24	DIN-RAIL MOUNTED 24 VDC TRANSDUCER POWER SUPPLY	ACOPIAN B24G110
25	4-TO-20 mA TRANSIENT PROTECTION MODULE	PROTEK MODEL 420E228
26	BUSHING MOUNTING BRACKET	ACTUAL PRODUCT SUPPLIED BY THE CONTRACTOR
27	BUSHING	CROUSE-HINDS BUSHING (CGB3816)
28	PROBE AND PROBE CABLE	ACTUAL PRODUCT SUPPLIED BY THE CONTRACTOR
29	BAG OF DESICCANT	ACTUAL PRODUCT SUPPLIED BY THE CONTRACTOR
30	PROBE CABLE HANGER AND DESICCANT HOLDER ASSEMBLY	ACTUAL PRODUCT SUPPLIED BY THE CONTRACTOR

REFERENCE DRAWINGS

FARM WELL CONTROL PANEL GENERAL ARRANGEMENT — — — — — — — — 805-D-10452

ALWAYS THINK SAFETY

U.S. DEPARTMENT OF THE INTERIOR
BUREAU OF RECLAMATION
CENTRAL VALLEY PROJECT
WEST SAN JOAQUIN DIVISION - SAN LUIS UNIT - CALIFORNIA
DRAINAGE FEATURE RE-EVALUATION FEASIBILITY STUDY
NORTHERLY AREA AND WESTLANDS WATER DISTRICT
ELECTRICAL INSTALLATION
FARM WELL CONTROL PANEL LAYOUT

DESIGNED R. Johansen
REVIEWED BY

CADD SYSTEM		CADD FILENAME
AutoCAD Rel. 16.0s		
DENVER, COLORADO	May 25, 2006	805-D-10453

DATE AND TIME PLOTTED
PLOTTED BY
RJohansen

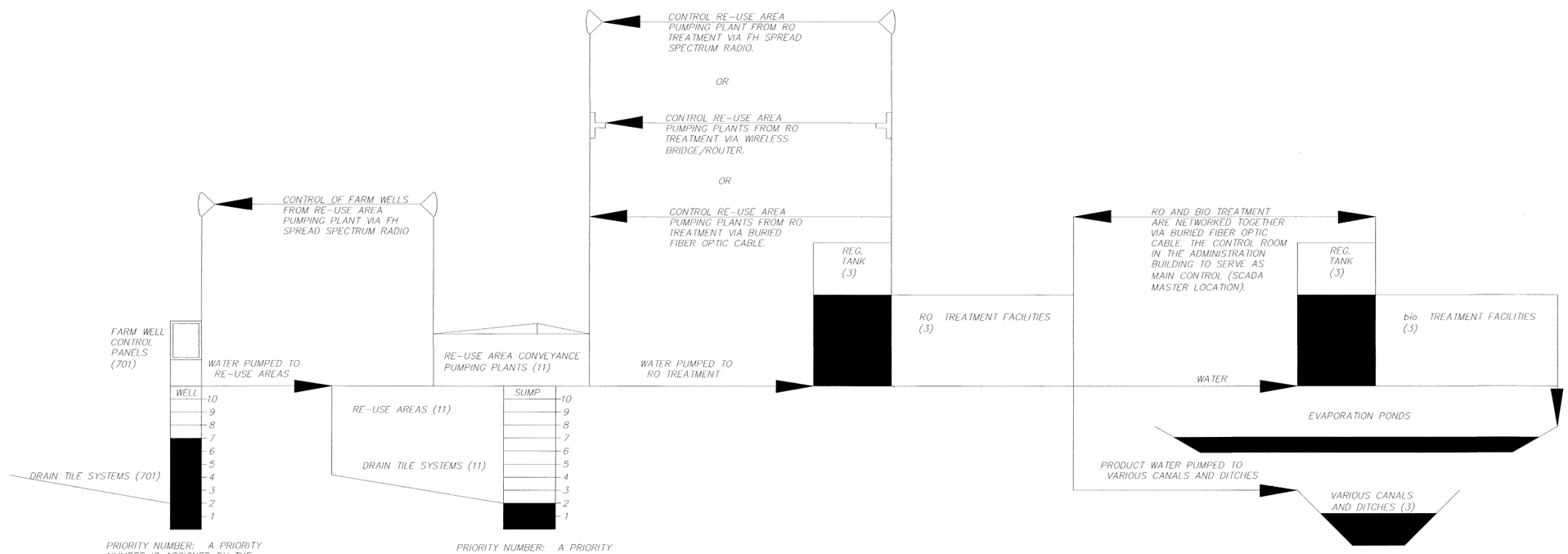

PRIORITY NUMBER: A PRIORITY NUMBER IS ASSIGNED BY THE RE-USE AREA PUMPING PLANT BASED ON RO TREATMENT FLOW NEEDS AND WELL WATER DEPTH. THE GREATER THE DEPTH THE HIGHER (LARGER) THE PRIORITY NUMBER. DEPTH CAN VARY AS NEEDED FOR THE CROP.

PRIORITY NUMBER: A PRIORITY NUMBER IS ASSIGNED BY THE RO TREATMENT PLANT BASED ON RO TREATMENT FLOW NEEDS AND SUMP WATER DEPTH. THE GREATER THE DEPTH THE HIGHER (LARGER) THE PRIORITY NUMBER.

INITIAL CONTROL OF THE FARM WELLS BY SIMPLIFIED CONTROLLER AT RE-USE AREA SITE. CONTROLLER TO BE MODULAR SO IT CAN BE MOVED AS CONSTRUCTION PROGRESSES TO OTHER SITES. FINAL CONTROL OF FARM WELLS BY RE-USE AREA PUMPING PLANT BASED ON RO TREATMENT FLOW NEEDS.

ALWAYS THINK SAFETY

U.S. DEPARTMENT OF THE INTERIOR
BUREAU OF RECLAMATION
CENTRAL VALLEY PROJECT
WEST SAN JOAQUIN DIVISION – SAN LUIS UNIT – CALIFORNIA

WESTLANDS WATER DISTRICT
ELECTRICAL INSTALLATION
WESTLANDS CONTROL FLOW DIAGRAM

DESIGNED R. Johansen
REVIEWED BY

CADD SYSTEM	CADD FILENAME
AutoCAD Rel. 16.0s	805-D-10454
DENVER, COLORADO May 25, 2006	805-D-10454

DATE AND TIME PLOTTED
PLOTTED BY R.Johansen

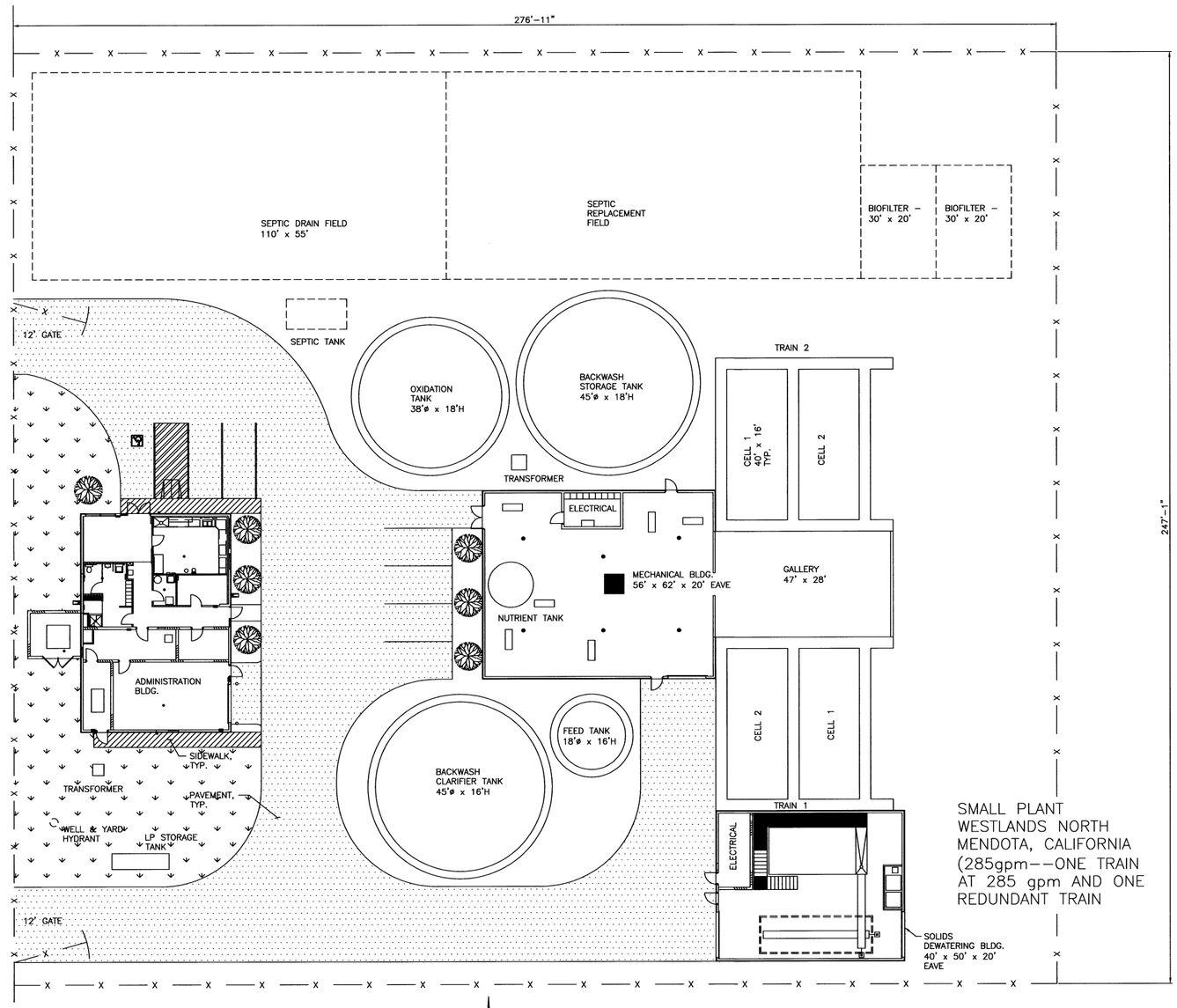

SMALL PLANT
WESTLANDS NORTH
MENDOTA, CALIFORNIA
(285gpm--ONE TRAIN
AT 285 gpm AND ONE
REDUNDANT TRAIN

CIVIL LEGEND:

- GRASS (SEEDED)
- GRASS (SOD)
- ASPHALT PAVING
- CONCRETE PAVING (SIDEWALK)
- —— x —— CHAIN LINK FENCE (6' H) W/ 3 BARBWIRE TOP
- TREE OR BUSH

LAYOUT PLAN

0 15'

PRELIMINARY
DO NOT USE FOR CONSTRUCTION

THIS DOCUMENT EMBODIES DESIGNS AND INFORMATION PROPRIETARY TO ZENON ENVIRONMENTAL INC. IT IS TO BE USED ONLY FOR THE PURPOSE AND BY THE ENTITY FOR WHICH IT WAS ORIGINALLY SUPPLIED. THE DOCUMENT MAY NOT BE DUPLICATED, DISCLOSED TO ANY OTHER PERSON OR ENTITY, OR USED FOR MANUFACTURE OF THE ITEM IN PART OR IN WHOLE WITHOUT THE PRIOR WRITTEN PERMISSION OF ZENON ENVIRONMENTAL INC.

REV.	DATE	DESCRIPTION	ZONE	DSGN	APPD
APPROVAL		DATE (Y/M/D)			
DRWN:	JH				
DSGN:	HF				
CHKD:	TP				
APPD:					
CADD FILE:					
SCALE:	1:1				

ZENON Environmental Inc.
Water for the World
ZEI – OAKVILLE ONTARIO

CUSTOMER:

TITLE: GENERAL PLANT SITE LAYOUT PLAN (WESTLANDS NORTH)

SIZE: D DRAWING NO. C-1 SHEET 1 OF 1 REV. C

ALWAYS THINK SAFETY

UNITED STATES
DEPARTMENT OF THE INTERIOR
BUREAU OF RECLAMATION
CENTRAL VALLEY PROJECT
WEST SAN JOAQUIN DIVISION – SAN LUIS UNIT – CALIFORNIA

DRAINAGE FEATURE
RE-EVALUATION FEASIBILITY STUDY
WESTLANDS WATER DISTRICT
SELENIUM BIOTREATMENT PLANT

RECEIVED

DENVER, COLORADO SEPTEMBER 11, 2006 805-D-10455

D (24x36)

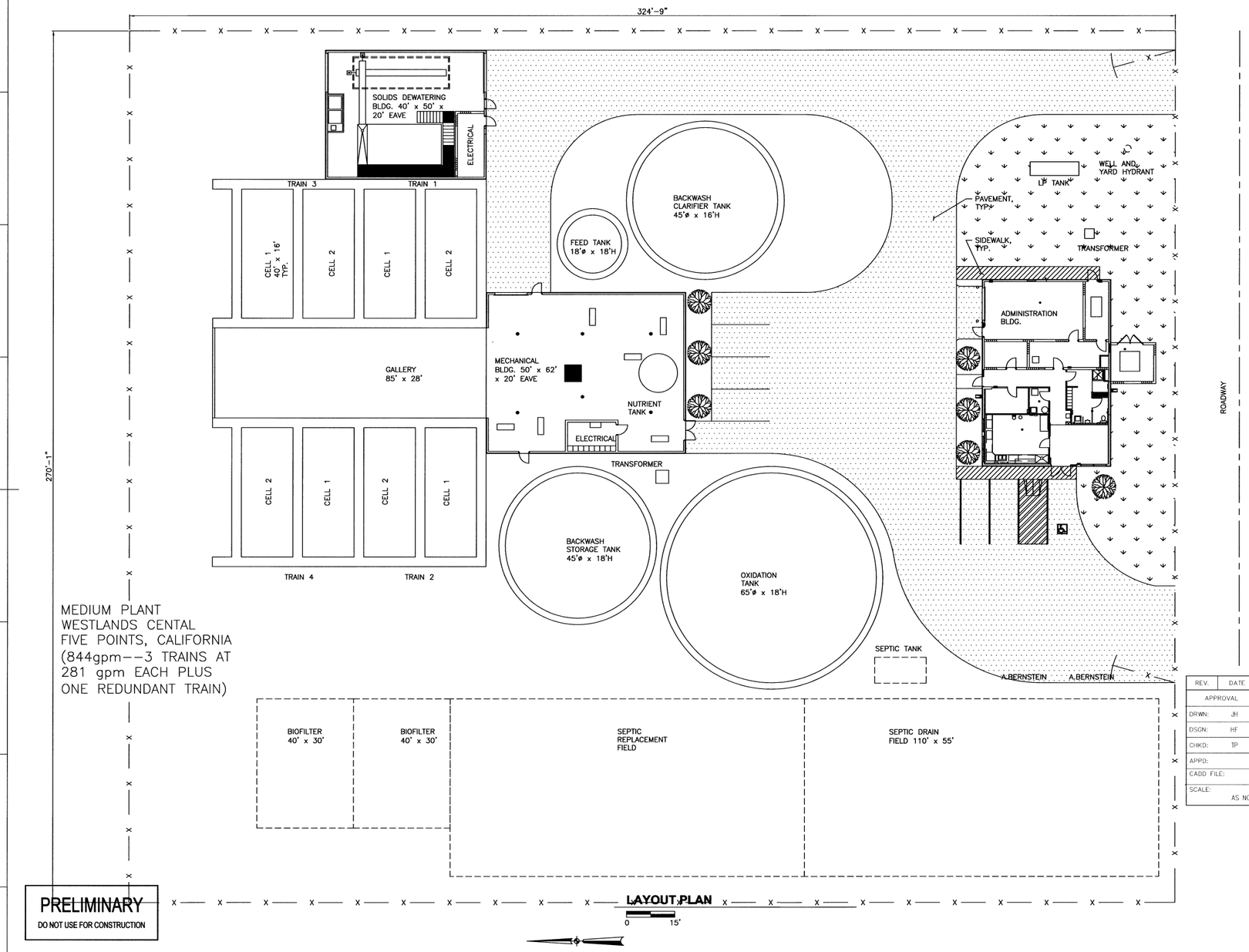

CIVIL LEGEND:

- GRASS (SEEDED)
- GRASS (SOD)
- ASPHALT PAVING
- CONCRETE PAVING (SIDEWALK)
- CHAIN LINK FENCE (6' H) W/ 3 BARBWIRE TOP
- TREE OR BUSH

PRELIMINARY
DO NOT USE FOR CONSTRUCTION

THIS DOCUMENT EMBODIES DESIGNS AND INFORMATION PROPRIETARY TO ZENON ENVIRONMENTAL INC. IT IS TO BE USED ONLY FOR THE PURPOSE AND BY THE ENTITY FOR WHICH IT WAS ORIGINALLY SUPPLIED. THE DOCUMENT MAY NOT BE DUPLICATED, DISCLOSED TO ANY OTHER PERSON OR ENTITY, OR USED FOR MANUFACTURE OF THE ITEM IN PART OR IN WHOLE WITHOUT THE PRIOR WRITTEN PERMISSION OF ZENON ENVIRONMENTAL INC.

REV.	DATE	DESCRIPTION	ZONE	DSGN	APP'D

APPROVAL		DATE (Y/M/D)
DRWN:	JH	
DSGN:	HF	
CHKD:	TP	
APPD:		
CADD FILE:		
SCALE:	AS NOTED	

ZENON Environmental Inc.
ZEI – OAKVILLE ONTARIO
Water for the World

CUSTOMER:

TITLE: GENERAL PLANT SITE LAYOUT PLAN (WESTLANDS CENTRAL)

SIZE: D | DRAWING NO. C-2 | SHEET 1 OF 1 | REV. B

ALWAYS THINK SAFETY

UNITED STATES
DEPARTMENT OF THE INTERIOR
BUREAU OF RECLAMATION
CENTRAL VALLEY PROJECT
WEST SAN JOAQUIN DIVISION – SAN LUIS UNIT – CALIFORNIA

DRAINAGE FEATURE
RE-EVALUATION FEASIBILITY STUDY
WESTLANDS WATER DISTRICT
SELENIUM BIOTREATMENT PLANT

RECEIVED _____

DENVER, COLORADO SEPTEMBER 11, 2008 | 805-D-10456

D (24x36)

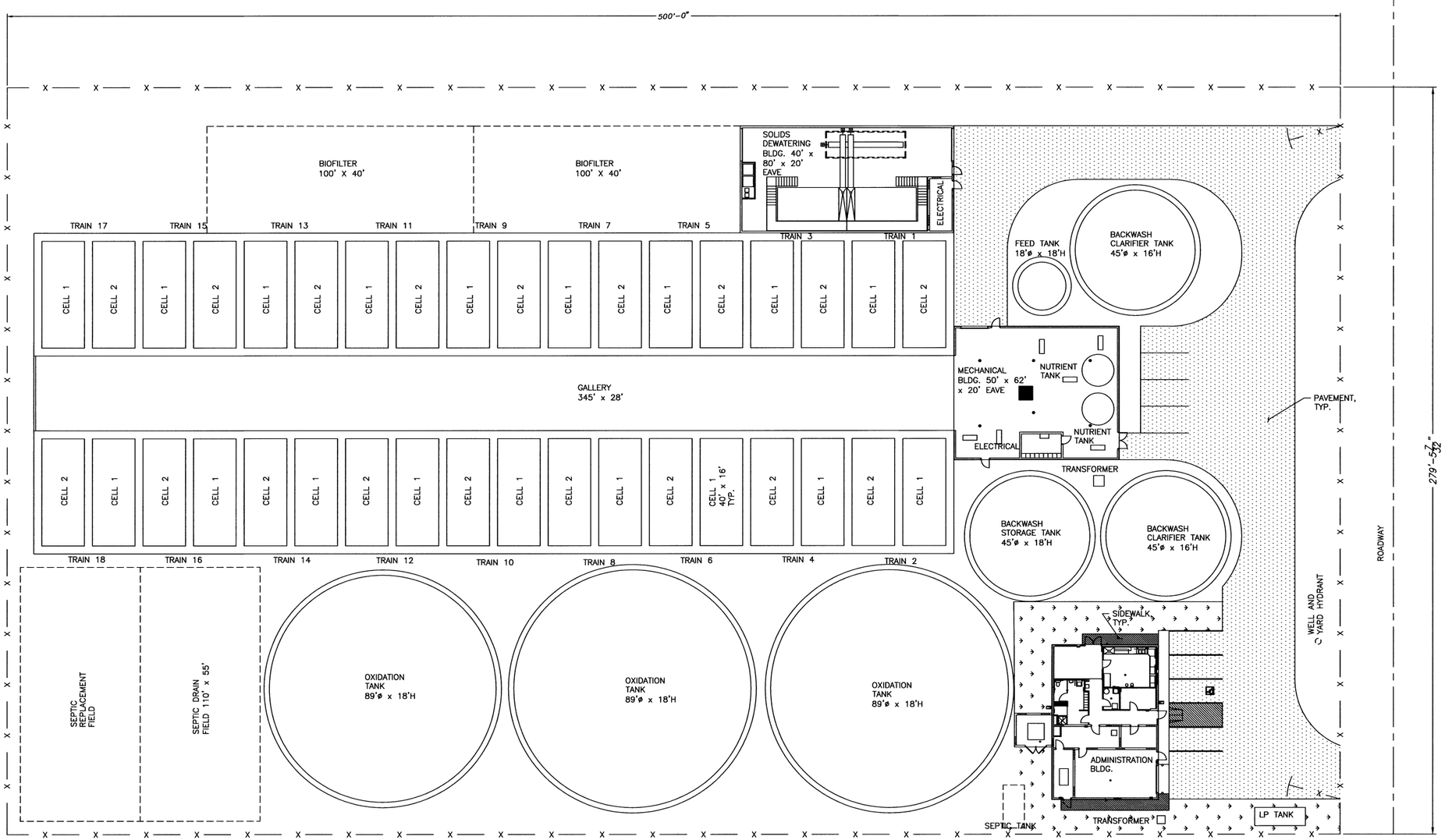

CIVIL LEGEND:

- GRASS (SEEDED)
- GRASS (SOD)
- ASPHALT PAVING
- CONCRETE PAVING (SIDEWALK)
- CHAIN LINK FENCE (6' H) W/ 3 BARBWIRE TOP
- TREE OR BUSH

PRELIMINARY
DO NOT USE FOR CONSTRUCTION

LAYOUT PLAN

LARGE PLANT
NORTHERLY
DOS PALOS, CALIFORNIA
(5000gpm--18 TRAINS AT 278 gpm EACH OR 17 TRAINS AT 294 gpm)

0 20'

THIS DOCUMENT EMBODIES DESIGNS AND INFORMATION PROPRIETARY TO ZENON ENVIRONMENTAL INC. IT IS TO BE USED ONLY FOR THE PURPOSE AND BY THE ENTITY FOR WHICH IT WAS ORIGINALLY SUPPLIED. THE DOCUMENT MAY NOT BE DUPLICATED, DISCLOSED TO ANY OTHER PERSON OR ENTITY, OR USED FOR MANUFACTURE OF THE ITEM IN PART OR IN WHOLE WITHOUT THE PRIOR WRITTEN PERMISSION OF ZENON ENVIRONMENTAL INC.

REV.	DATE	DESCRIPTION	ZONE	DSGN	APPD

APPROVAL		DATE (Y/M/D)
DRWN:	JH	
DSGN:	HF	
CHKD:	TP	
APPD:		
CADD FILE:		
SCALE:	AS NOTED	

ZENON Environmental Inc.
ZEI – OAKVILLE ONTARIO
Water for the World

CUSTOMER:

TITLE: GENERAL PLANT SITE LAYOUT PLAN (NORTHERLY PLANT)

SIZE: D | DRAWING NO. C-3 | SHEET 1 OF 1 | REV. C

ALWAYS THINK SAFETY

UNITED STATES
DEPARTMENT OF THE INTERIOR
BUREAU OF RECLAMATION
CENTRAL VALLEY PROJECT
WEST SAN JOAQUIN DIVISION – SAN LUIS UNIT – CALIFORNIA
DRAINAGE FEATURE
RE-EVALUATION FEASIBILITY STUDY
NORTHERLY AREA
SELENIUM BIOTREATMENT PLANT

RECEIVED

DENVER, COLORADO SEPTEMBER 11, 2008 | 805-D-10457

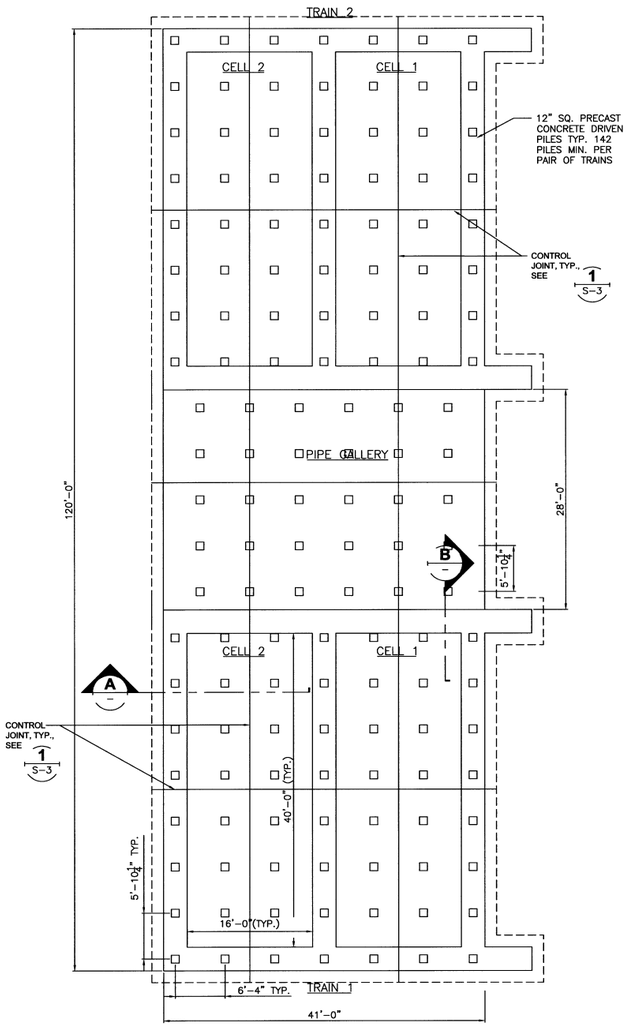

NOTE:
REPEAT ONCE FOR MEDIUM SYSTEM
REPEAT EIGHT TIMES FOR LARGE SYSTEM

FOUNDATION PLAN
TWO TRAINS AND PIPE GALLERY
NTS

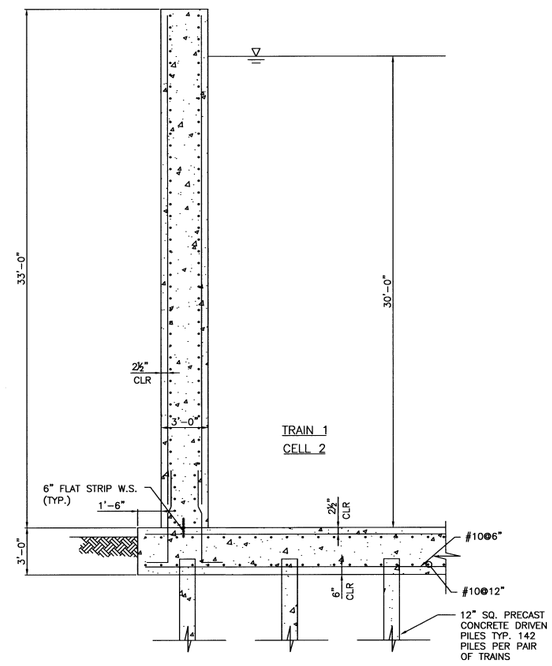

FOUNDATION SECTION A
NTS

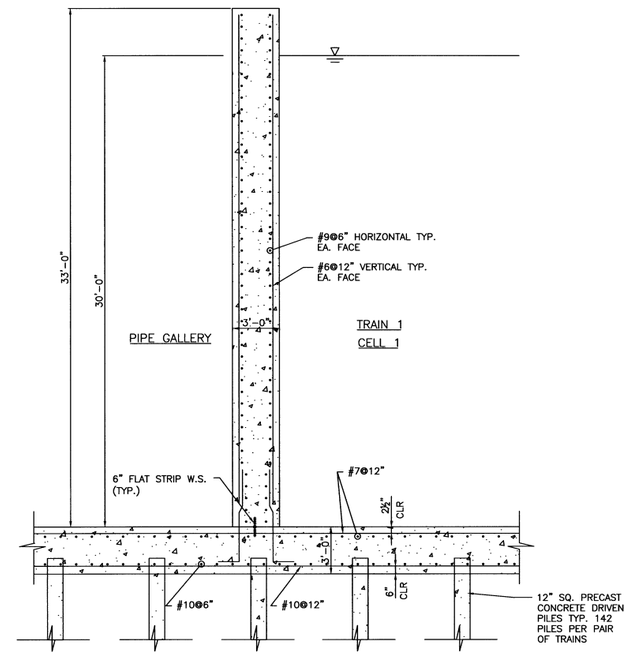

FOUDATION SECTION B
NTS

USBR - Selenium Removal Reactors			
Pile Requirements			
Structure	No. and Size Per Plant Type		
	Small	Medium	Large
Bioreactor/Pipe Gallery Train Pair	1 @ 120' x 41'	2 @ 120' x 41'	9 @ 120' x 41'
No. 50 T piles	142	268	1150

PRELIMINARY
DO NOT USE FOR CONSTRUCTION

THIS DOCUMENT EMBODIES DESIGNS AND INFORMATION PROPRIETARY TO ZENON ENVIRONMENTAL INC. IT IS TO BE USED ONLY FOR THE PURPOSE AND BY THE ENTITY FOR WHICH IT WAS ORIGINALLY SUPPLIED. THIS DOCUMENT MAY NOT BE DUPLICATED, DISCLOSED TO ANY OTHER PERSON OR ENTITY, OR USED FOR MANUFACTURE OF THE ITEM IN PART OR IN WHOLE WITHOUT THE PRIOR WRITTEN PERMISSION OF ZENON ENVIRONMENTAL INC.

REV.	DATE	DESCRIPTION	ZONE	DSGN	APPD

APPROVAL		DATE (Y/M/D)
DRWN:	JH	
DSGN:	HF	
CHKD:	TP	
APPD:		
CADD FILE:		
SCALE:	AS NOTED	

ZENON Water for the World
ZENON Environmental Inc.
ZEI – OAKVILLE ONTARIO
CUSTOMER:
TITLE: BIOREACTOR FOUNDATION PLAN AND SECTION
SIZE: D
DRAWING NO. S-1
SHEET 1 OF 1
REV. C

ALWAYS THINK SAFETY

UNITED STATES
DEPARTMENT OF THE INTERIOR
BUREAU OF RECLAMATION
CENTRAL VALLEY PROJECT
WEST SAN JOAQUIN DIVISION – SAN LUIS UNIT – CALIFORNIA
DRAINAGE FEATURE
RE–EVALUATION FEASIBILITY STUDY
NORTHERLY AREA AND WESTLANDS WATER DISTRICT
SELENIUM BIOTREATMENT PLANT

RECEIVED
RECEIVED
DENVER, COLORADO SEPTEMBER 11, 2008
805–D–10458

USBR - Selenium Removal Reactors Pile Requirements			
Structure	No. and Size Per Plant Type		
	Small	Medium	Large
Clarifier	1 @ 45' D	1 @ 45' D	2 @ 45' D
No. of 50 Ton Piles (As Shown)	36	36	72

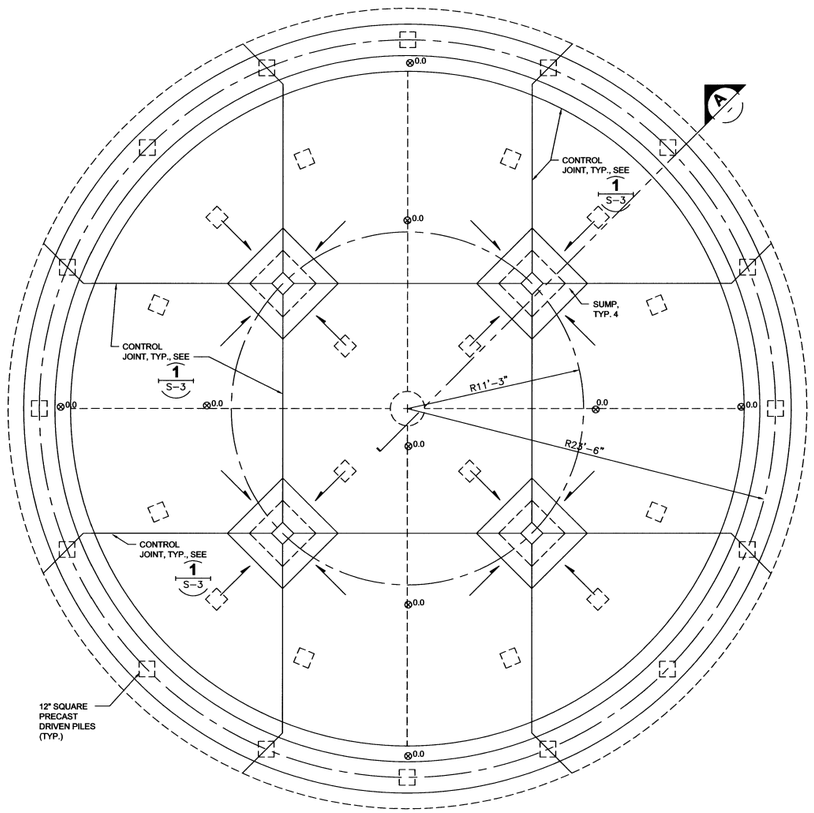

NOTE:
SEE TABLE FOR PILE QUANTITIES AND SIZES OF OTHER TANKS

FOUNDATION AND PILE PLAN FOR 45' DIAMETER CLARIFIER TANK

NTS

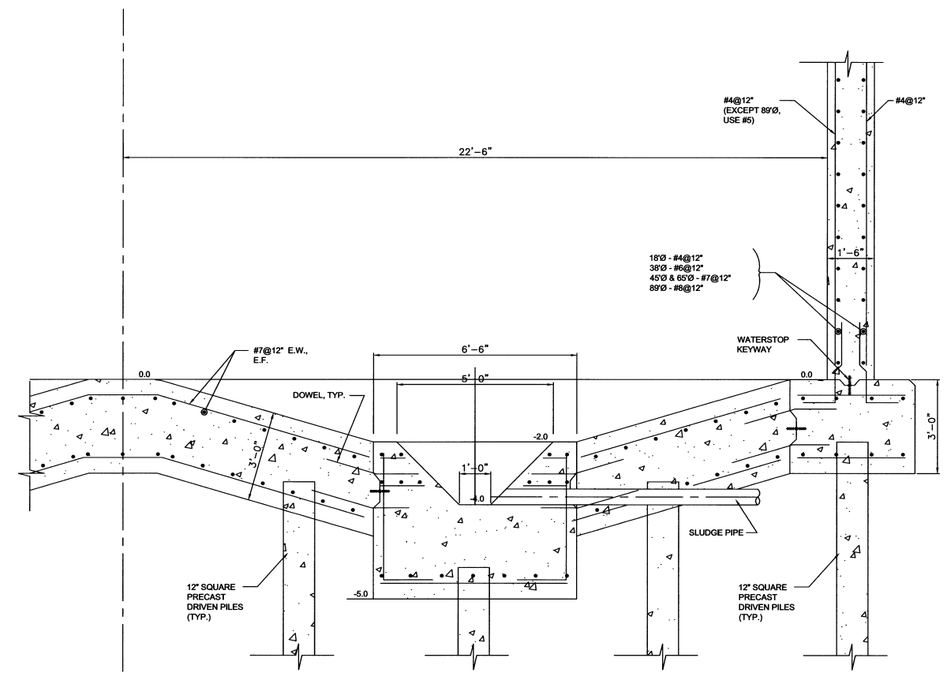

DETAIL SECTION A

NTS

PRELIMINARY
DO NOT USE FOR CONSTRUCTION

THIS DOCUMENT EMBODIES DESIGNS AND INFORMATION PROPRIETARY TO ZENON ENVIRONMENTAL INC. IT IS TO BE USED ONLY FOR THE PURPOSE AND BY THE ENTITY FOR WHICH IT WAS ORIGINALLY SUPPLIED. THE DOCUMENT MAY NOT BE DUPLICATED, DISCLOSED TO ANY OTHER PERSON OR ENTITY, OR USED FOR MANUFACTURE OF THE ITEM IN PART OR IN WHOLE WITHOUT THE PRIOR WRITTEN PERMISSION OF ZENON ENVIRONMENTAL INC.

REV.	DATE	DESCRIPTION	ZONE	DSGN	APPD

APPROVAL		DATE (Y/M/D)
DRWN:	JH	
DSGN:	HF	
CHKD:	TP	
APPD:		
CADD FILE:		

ZENON Environmental Inc.
ZEI – OAKVILLE ONTARIO
Water for the World

CUSTOMER:

TITLE: BACKWASH CLARIFIER PLAN AND SECTION

SCALE: AS NOTED | SIZE: D | DRAWING NO. S-2 | SHEET 1 OF 1 | REV. B

ALWAYS THINK SAFETY

UNITED STATES
DEPARTMENT OF THE INTERIOR
BUREAU OF RECLAMATION
CENTRAL VALLEY PROJECT
WEST SAN JOAQUIN DIVISION – SAN LUIS UNIT – CALIFORNIA

DRAINAGE FEATURE
RE-EVALUATION FEASIBILITY STUDY
NORTHERLY AREA AND WESTLANDS WATER DISTRICT
SELENIUM BIOTREATMENT PLANT

RECEIVED
RECEIVED

DENVER, COLORADO SEPTEMBER 11, 2008 | 805-D-10459

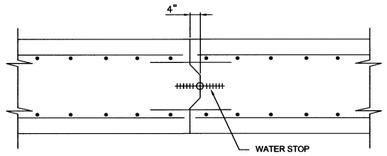

CONSTRUCTION JOINT DETAIL 1

NTS

USBR - Selenium Removal Reactors			
Pile Requirements			
Structure	No. and Size Per Plant Type		
	Small	Medium	Large
Backwash Tank	1 @ 45' D	1 @ 45' D	1 @ 45' D
No. of 50 Ton Piles	32	32	32
Feed Tank	1 @ 18'D	1 @ 18'D	1 @ 18'D
No. of 50 Ton Piles	7	7	7
Oxidation Tanks	1 @ 38'D	1 @ 65'D	3 @ 89'D
No. of 50 Ton Piles	24	61	321

NOTE: ALL CIRCULAR TANKS HAVE 18 FOOT SIDEWALL AND A 16 FOOT MAX. LIQUIED DEPTH.

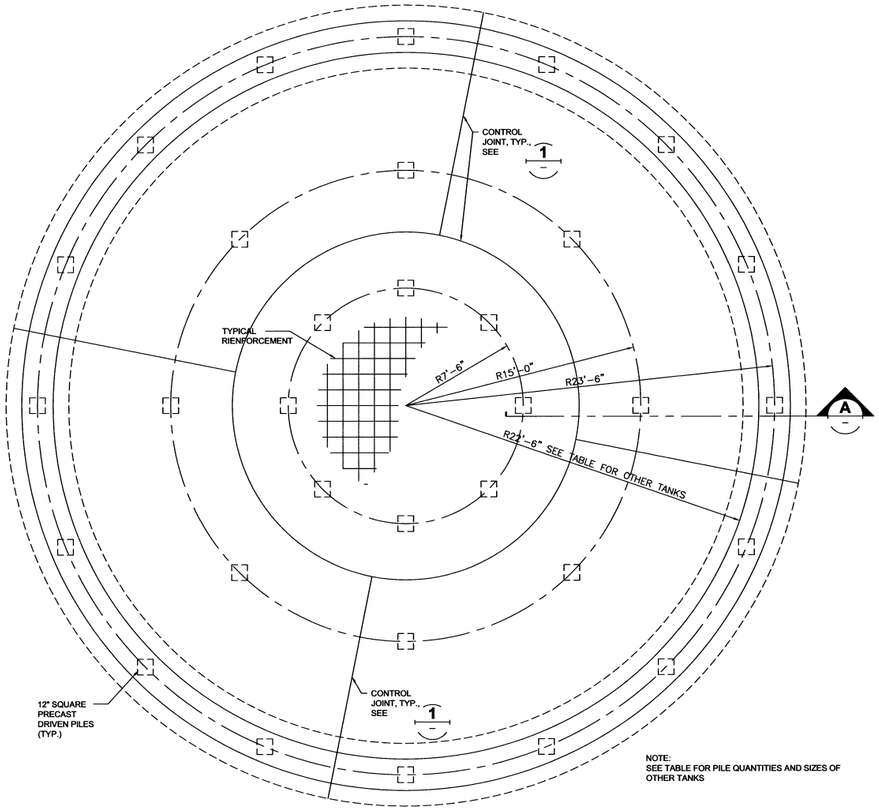

NOTE:
SEE TABLE FOR PILE QUANTITIES AND SIZES OF OTHER TANKS

FOUNDATION AND PILE PLAN FOR 45' DIAMETER CIRCULAR TANK

NTS

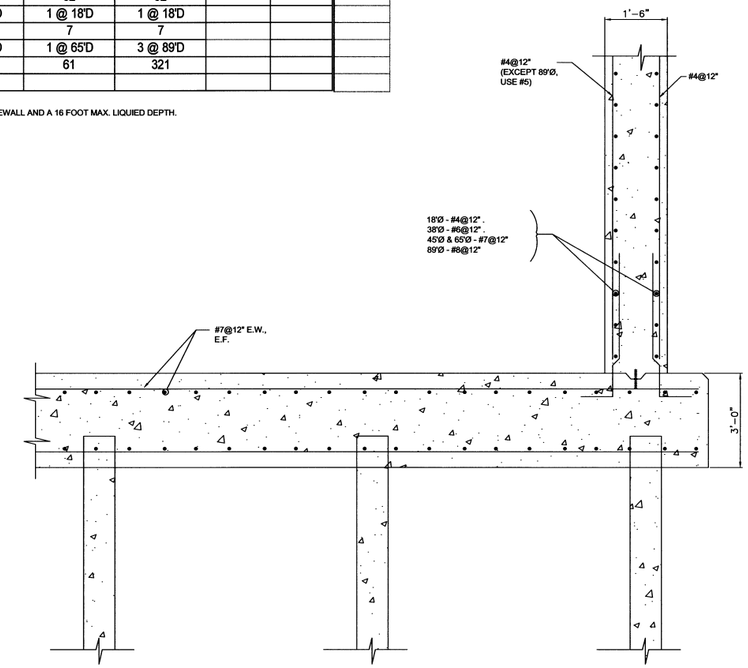

DETAIL SECTION A

NTS

PRELIMINARY
DO NOT USE FOR CONSTRUCTION

THIS DOCUMENT EMBODIES DESIGNS AND INFORMATION PROPRIETARY TO ZENON ENVIRONMENTAL INC. IT IS TO BE USED ONLY FOR THE PURPOSE AND BY THE ENTITY FOR WHICH IT WAS ORIGINALLY SUPPLIED. THE DOCUMENT MAY NOT BE DUPLICATED, DISCLOSED TO ANY OTHER PERSON OR ENTITY, OR USED FOR MANUFACTURE OF THE ITEM IN PART OR IN WHOLE WITHOUT THE PRIOR WRITTEN PERMISSION OF ZENON ENVIRONMENTAL INC.

REV.	DATE	DESCRIPTION	ZONE	DSGN	APPD

APPROVAL		DATE (Y/M/D)
DRWN:	JH	
DSGN:	HF	
CHKD:	TP	
APPD:		
CADD FILE:		
SCALE:	AS NOTED	

ZENON Environmental Inc.
ZEI – OAKVILLE ONTARIO
Water for the World

CUSTOMER:

TITLE: CONCRETE TANK FOUNDATION PLAN AND SECTION

SIZE: D | DRAWING NO. S-3 | SHEET 1 OF 1 | REV. B

ALWAYS THINK SAFETY

UNITED STATES
DEPARTMENT OF THE INTERIOR
BUREAU OF RECLAMATION
CENTRAL VALLEY PROJECT
WEST SAN JOAQUIN DIVISION – SAN LUIS UNIT – CALIFORNIA

DRAINAGE FEATURE
RE–EVALUATION FEASIBILITY STUDY
NORTHERLY AREA AND WESTLANDS WATER DISTRICT
SELENIUM BIOTREATMENT PLANT

RECEIVED
RECEIVED

DENVER, COLORADO SEPTEMBER 11, 2008 | 805–D–10460

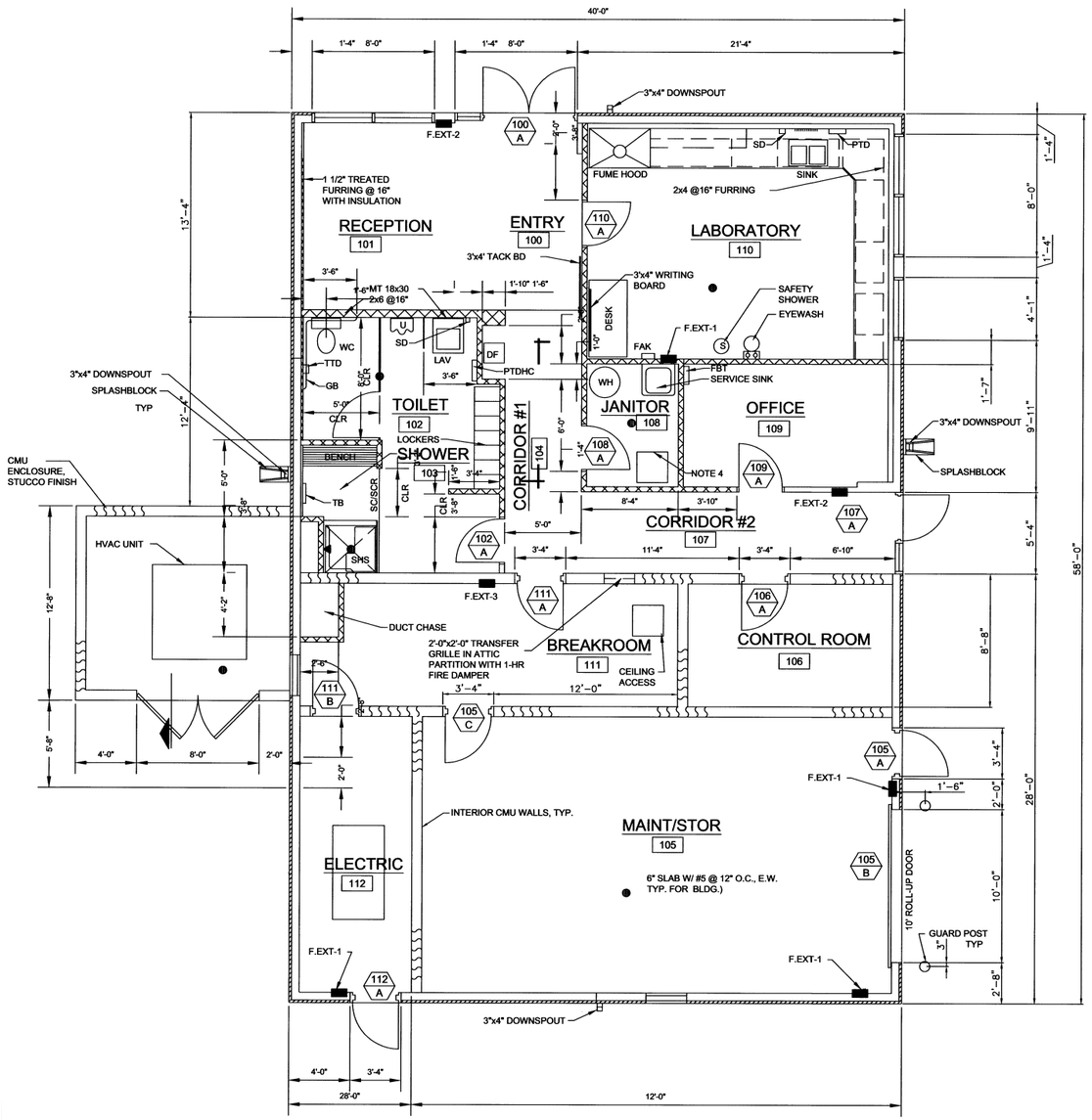

ARCHITECTURAL LEGEND

SYMBOL	DESCRIPTION	SYMBOL	DESCRIPTION
W1, L1, R1	WINDOW NUMBER, LOUVER NUMBER, RELIGHT NUMBER		WOOD STUD WALL
103	ROOM NUMBER		RIGID INSULATION
100 B	DOOR NUMBER		BATT INSULATION
	CONCRETE		PLYWOOD
	CMU PLAN		GROUND SURFACE
	CMU SECTION	WALL — F.EXT-"X"	FIRE EXTINGUISHER
	METAL BLDG PLAN		
INSULATED WALL PANEL			

REV.	DATE	DESCRIPTION	ZONE	DSGN	APPD
APPROVAL	DATE (Y/M/D)	ZENON Environmental Inc. ZEI – OAKVILLE ONTARIO			
DRWN: JH		CUSTOMER:			
DSGN: HF					
CHKD: TP		TITLE: ADMINISTRATION BLDG PLAN			
APPD:					
CADD FILE: 2001090002.DGN					
SCALE: AS NOTED		SIZE: D	DRAWING NO. A-1	SHEET 1 OF 1	REV. B

ALWAYS THINK SAFETY

UNITED STATES
DEPARTMENT OF THE INTERIOR
BUREAU OF RECLAMATION
CENTRAL VALLEY PROJECT
WEST SAN JOAQUIN DIVISION – SAN LUIS UNIT – CALIFORNIA

DRAINAGE FEATURE
RE-EVALUATION FEASIBILITY STUDY
NORTHERLY AREA AND WESTLANDS WATER DISTRICT
SELENIUM BIOTREATMENT PLANT

RECEIVED J. Neumann
DENVER, COLORADO SEPTEMBER 11, 2008 805-D-10461

PRELIMINARY
DO NOT USE FOR CONSTRUCTION

ADMINISTRATION BLDG PLAN

NOTE:
NORTH DIRECTION BASED UPON WESTLANDS NORTH SITE.

THIS DOCUMENT EMBODIES DESIGNS AND INFORMATION PROPRIETARY TO ZENON ENVIRONMENTAL INC. IT IS TO BE USED ONLY FOR THE PURPOSE AND BY THE ENTITY FOR WHICH IT WAS ORIGINALLY SUPPLIED. THE DOCUMENT MAY NOT BE DUPLICATED, DISCLOSED TO ANY OTHER PERSON OR ENTITY, OR USED FOR MANUFACTURE OF THE ITEM IN PART OR IN WHOLE WITHOUT THE PRIOR WRITTEN PERMISSION OF ZENON ENVIRONMENTAL INC.

D (22x34)

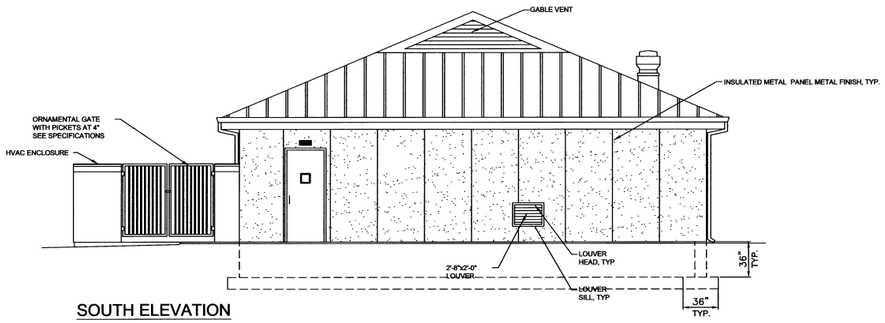

SOUTH ELEVATION

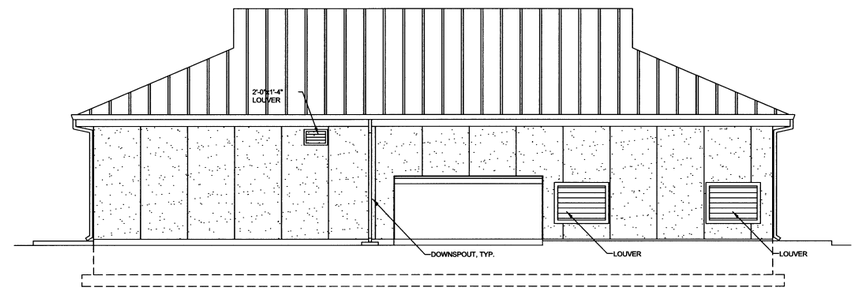

WEST ELEVATION

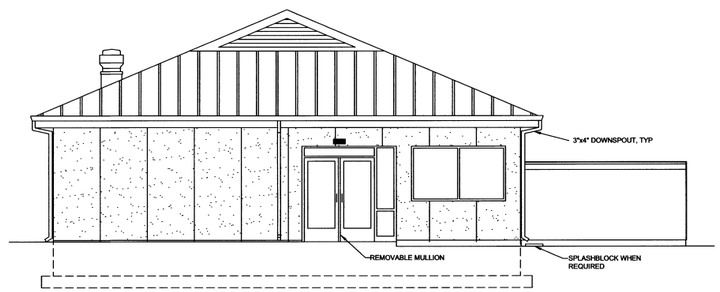

NORTH ELEVATION

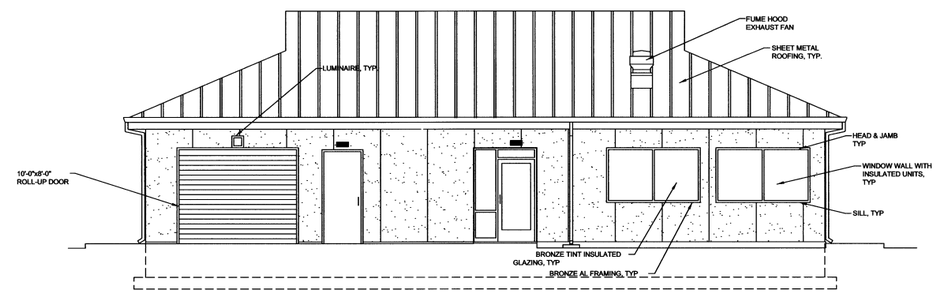

EAST ELEVATION

ADMINISTRATION BLDG PLAN

0 3' 16'

PRELIMINARY

DO NOT USE FOR CONSTRUCTION

NOTE:
ALL ELEVATIONS BASED UPON WESTLANDS NORTH SITE.

THIS DOCUMENT EMBODIES DESIGNS AND INFORMATION PROPRIETARY TO ZENON ENVIRONMENTAL INC. IT IS TO BE USED ONLY FOR THE PURPOSE AND BY THE ENTITY FOR WHICH IT WAS ORIGINALLY SUPPLIED. THE DOCUMENT MAY NOT BE DUPLICATED, DISCLOSED TO ANY OTHER PERSON OR ENTITY, OR USED FOR MANUFACTURE OF THE ITEM IN PART OR IN WHOLE WITHOUT THE PRIOR WRITTEN PERMISSION OF ZENON ENVIRONMENTAL INC.

REV.	DATE	DESCRIPTION	ZONE	DSGN	APPD
APPROVAL		DATE (Y/M/D)			
DRWN:	JH				
DSGN:	HF				
CHKD:	TP				
APPD:					
CADD FILE:	2001090002.DGN				
SCALE:	3/16"=1'-0"				

ZENON Environmental Inc.
ZEI – OAKVILLE ONTARIO
Water for the World

CUSTOMER:

TITLE: ADMINISTRATION BLDG ELEVATIONS

SIZE: D DRAWING NO. A-2 SHEET 1 OF 1 REV. C

ALWAYS THINK SAFETY

UNITED STATES
DEPARTMENT OF THE INTERIOR
BUREAU OF RECLAMATION
CENTRAL VALLEY PROJECT
WEST SAN JOAQUIN DIVISION – SAN LUIS UNIT – CALIFORNIA

DRAINAGE FEATURE
RE–EVALUATION FEASIBILITY STUDY
NORTHERLY AREA AND WESTLANDS WATER DISTRICT
SELENIUM BIOTREATMENT PLANT

RECEIVED

DENVER, COLORADO SEPTEMBER 11, 2008 805–D–10462

D (24x36)

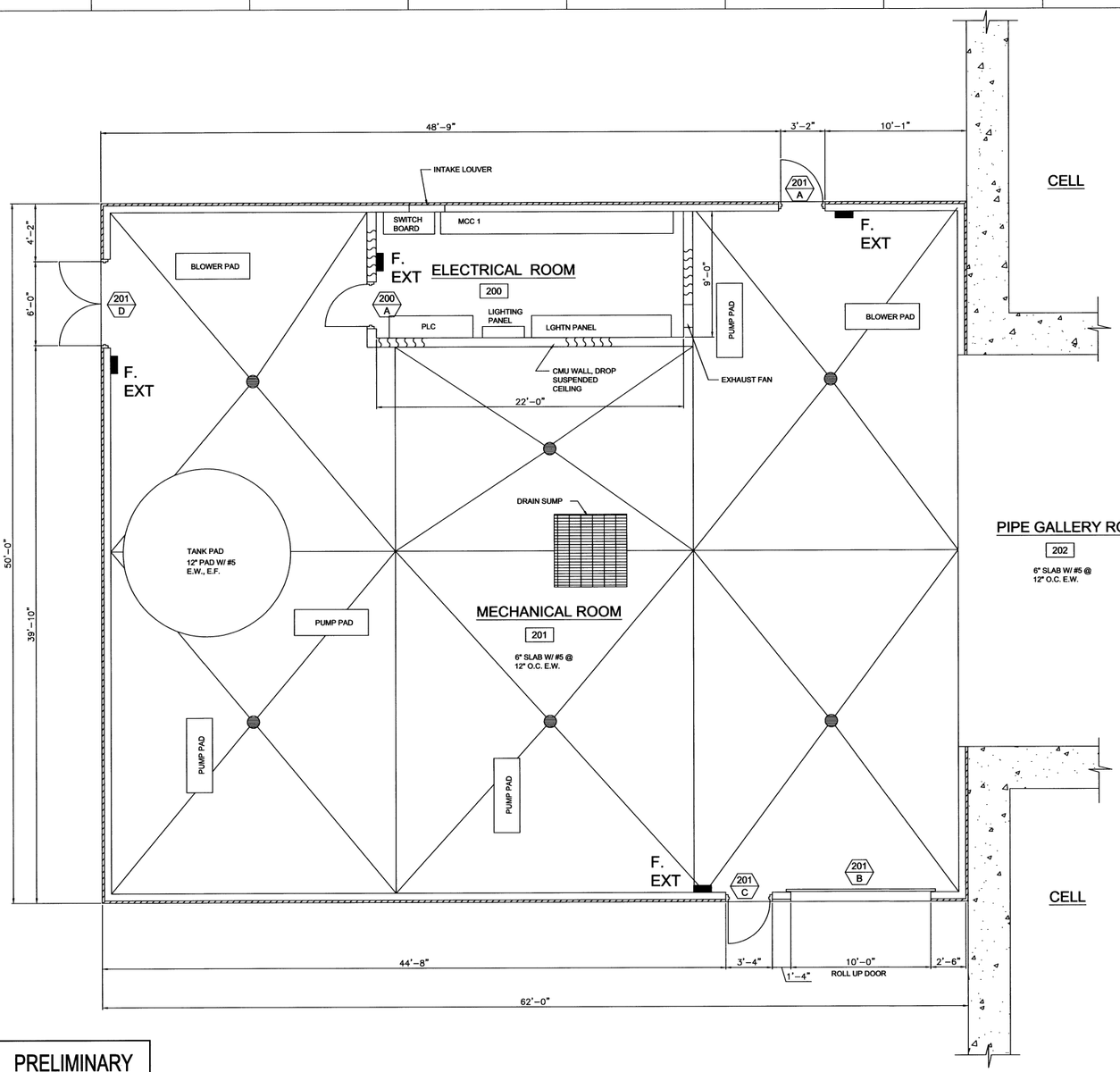

PIPE GALLERY ROOM
202
6" SLAB W/ #5 @
12" O.C. E.W.

ARCHITECTURAL LEGEND

SYMBOL	DESCRIPTION	SYMBOL	DESCRIPTION
W1 , L1 , R1	WINDOW NUMBER, LOUVER NUMBER, RELIGHT NUMBER		WOOD STUD WALL
103	ROOM NUMBER		RIGID INSULATION
100 B	DOOR NUMBER		BATT INSULATION
	CONCRETE		PLYWOOD
	CMU PLAN		GROUND SURFACE
	CMU SECTION	WALL F.EXT-"X"	FIRE EXTINGUISHER
	METAL BLDG PLAN		
INSULLATED WALL PANEL			

PRELIMINARY
DO NOT USE FOR CONSTRUCTION

MECHANICAL BLDG PLAN

NOTE:
1. NORTH DIRECTION BASED UPON WESTLANDS NORTH SITE.
2. ELECTRICAL ROOM SHOWN IS FOR LARGE FACILITY, SMALL AND MEDIUM FACILITIES TO BE 9' x 18' MINIMUM

REV.	DATE	DESCRIPTION	ZONE	DSGN	APPD

APPROVAL		DATE (Y/M/D)
DRWN:	JH	
DSGN:	HF	
CHKD:	TP	
APPD:		
CADD FILE:	2001090002.DGN	
SCALE:	AS NOTED	

ZENON Environmental Inc.
ZEI – OAKVILLE ONTARIO
Water for the World

CUSTOMER:
TITLE: MECHANICAL BLDG PLAN
SIZE: D DRAWING NO. A-3 SHEET 1 OF 1 REV. C

ALWAYS THINK SAFETY

UNITED STATES
DEPARTMENT OF THE INTERIOR
BUREAU OF RECLAMATION
CENTRAL VALLEY PROJECT
WEST SAN JOAQUIN DIVISION – SAN LUIS UNIT – CALIFORNIA
DRAINAGE FEATURE
RE-EVALUATION FEASIBILITY STUDY
NORTHERLY AREA AND WESTLANDS WATER DISTRICT
SELENIUM BIOTREATMENT PLANT

RECEIVED _____
DENVER, COLORADO SEPTEMBER 11, 2008 805-D-10463

THIS DOCUMENT EMBODIES DESIGNS AND INFORMATION PROPRIETARY TO ZENON ENVIRONMENTAL INC. IT IS TO BE USED ONLY FOR THE PURPOSE AND BY THE ENTITY FOR WHICH IT WAS ORIGINALLY SUPPLIED. THE DOCUMENT MAY NOT BE DUPLICATED, DISCLOSED TO ANY OTHER PERSON OR ENTITY, OR USED FOR MANUFACTURE OF THE ITEM IN PART OR IN WHOLE WITHOUT THE PRIOR WRITTEN PERMISSION OF ZENON ENVIRONMENTAL INC.

D (24x36)

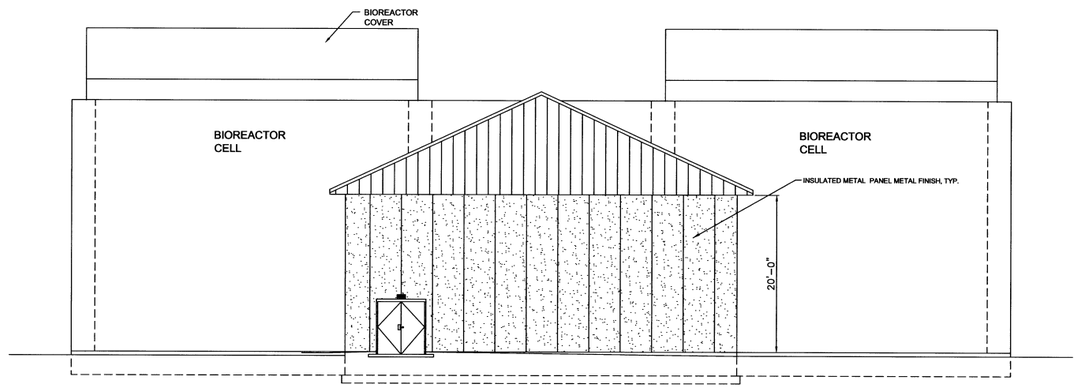

WEST ELEVATION

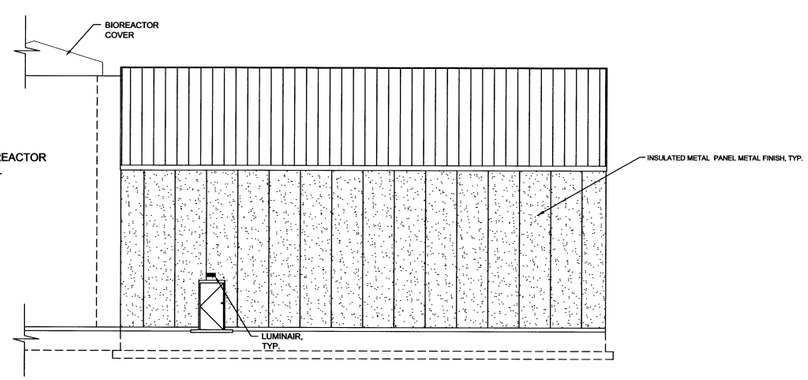

NORTH ELEVATION

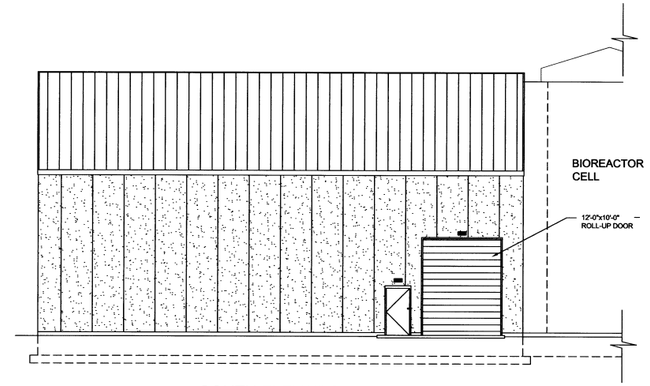

SOUTH ELEVATION

PRELIMINARY
DO NOT USE FOR CONSTRUCTION

NOTE:
ALL ELEVATIONS BASED UPON WESTLANDS NORTH SITE.

THIS DOCUMENT EMBODIES DESIGNS AND INFORMATION PROPRIETARY TO ZENON ENVIRONMENTAL INC. IT IS TO BE USED ONLY FOR THE PURPOSE AND BY THE ENTITY FOR WHICH IT WAS ORIGINALLY SUPPLIED. THE DOCUMENT MAY NOT BE DUPLICATED, DISCLOSED TO ANY OTHER PERSON OR ENTITY, OR USED FOR MANUFACTURE OF THE ITEM IN PART OR IN WHOLE WITHOUT THE PRIOR WRITTEN PERMISSION OF ZENON ENVIRONMENTAL INC

REV.	DATE	DESCRIPTION	ZONE	DSGN	APPD

APPROVAL		DATE (Y/M/D)
DRWN:	JH	
DSGN:	HF	
CHKD:	TP	
APPD:		
CADD FILE:	200109D002.DGN	
SCALE:	AS NOTED	

ZENON Environmental Inc.
ZEI – OAKVILLE ONTARIO
Water for the World

CUSTOMER:

TITLE: MECHANICAL BLDG ELEVATIONS

SIZE: D | DRAWING NO. A-4 | SHEET 1 OF 1 | REV. C

ALWAYS THINK SAFETY

UNITED STATES
DEPARTMENT OF THE INTERIOR
BUREAU OF RECLAMATION
CENTRAL VALLEY PROJECT
WEST SAN JOAQUIN DIVISION – SAN LUIS UNIT – CALIFORNIA

DRAINAGE FEATURE
RE-EVALUATION FEASIBILITY STUDY
NORTHERLY AREA AND WESTLANDS WATER DISTRICT
SELENIUM BIOTREATMENT PLANT

RECEIVED _____

DENVER, COLORADO SEPTEMBER 11, 2006 | 805-D-10464

D (24x36)

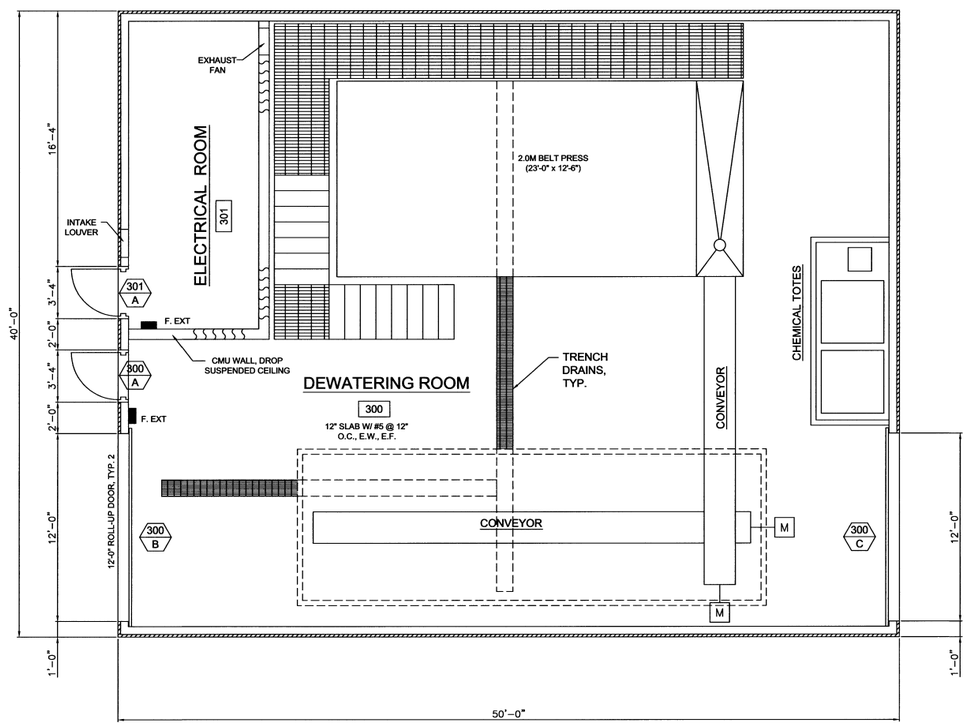

ARCHITECTURAL LEGEND

SYMBOL	DESCRIPTION	SYMBOL	DESCRIPTION
W1 . L1 . R1	WINDOW NUMBER, LOUVER NUMBER, RELIGHT NUMBER		WOOD STUD WALL
103	ROOM NUMBER		RIGID INSULATION
100 B	DOOR NUMBER		BATT INSULATION
	CONCRETE		PLYWOOD
	CMU PLAN		GROUND SURFACE
	CMU SECTION	WALL — F.EXT-"X"	FIRE EXTINGUISHER
	METAL BLDG PLAN		

INSULATED WALL PANEL

REV.	DATE	DESCRIPTION	ZONE	DSGN	APPD

APPROVAL		DATE (Y/M/D)
DRWN:	JH	
DSGN:	HF	
CHKD:	TP	
APPD:		
CADD FILE:	2001090002.DGN	
SCALE:	AS NOTED	

ZENON Environmental Inc.
ZEI – OAKVILLE ONTARIO
Water for the World

CUSTOMER:

TITLE: SOLIDS DEWATERING BLDG PLAN

SIZE: D DRAWING NO. A-5 SHEET 1 OF 1 REV. C

ALWAYS THINK SAFETY

UNITED STATES
DEPARTMENT OF THE INTERIOR
BUREAU OF RECLAMATION
CENTRAL VALLEY PROJECT
WEST SAN JOAQUIN DIVISION – SAN LUIS UNIT – CALIFORNIA
DRAINAGE FEATURE
RE-EVALUATION FEASIBILITY STUDY
NORTHERLY AREA AND WESTLANDS WATER DISTRICT
SELENIUM BIOTREATMENT PLANT

RECEIVED J. Heimaier
DENVER, COLORADO SEPTEMBER 11, 2006 805-D-10465

PRELIMINARY
DO NOT USE FOR CONSTRUCTION

SOLIDS DEWATERING BLDG PLAN

NOTE:
NORTH DIRECTION BASED UPON WESTLANDS NORTH SITE.

THIS DOCUMENT EMBODIES DESIGNS AND INFORMATION PROPRIETARY TO ZENON ENVIRONMENTAL INC. IT IS TO BE USED ONLY FOR THE PURPOSE AND BY THE ENTITY FOR WHICH IT WAS ORIGINALLY SUPPLIED. THE DOCUMENT MAY NOT BE DUPLICATED, DISCLOSED TO ANY OTHER PERSON OR ENTITY, OR USED FOR MANUFACTURE OF THE ITEM IN PART OR IN WHOLE WITHOUT THE PRIOR WRITTEN PERMISSION OF ZENON ENVIRONMENTAL INC.

D(24x36)

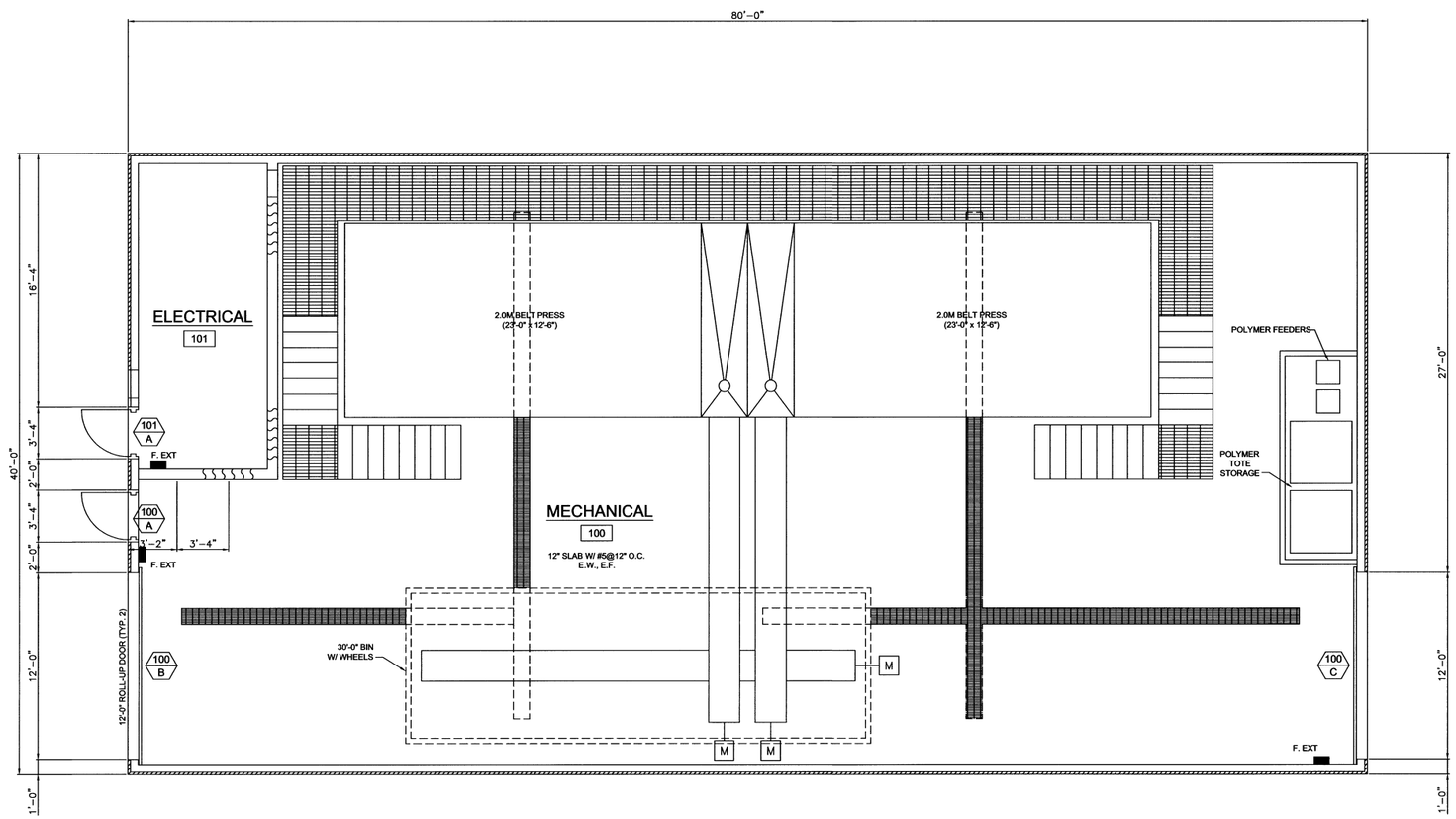

LARGE FACILITY BLDG PLAN

0 1' 4'

PRELIMINARY
DO NOT USE FOR CONSTRUCTION

THIS DOCUMENT EMBODIES DESIGNS AND INFORMATION PROPRIETARY TO ZENON ENVIRONMENTAL INC.
IT IS TO BE USED ONLY FOR THE PURPOSE AND BY THE ENTITY FOR WHICH IT WAS ORIGINALLY SUPPLIED. THE DOCUMENT MAY NOT BE DUPLICATED, DISCLOSED TO ANY OTHER PERSON OR ENTITY, OR USED FOR MANUFACTURE OF THE ITEM IN PART OR IN WHOLE WITHOUT THE PRIOR WRITTEN PERMISSION OF ZENON ENVIRONMENTAL INC.

REV.	DATE	DESCRIPTION	ZONE	DSGN	APPD

APPROVAL		DATE (Y/M/D)
DRWN:	TB	
DSGN:	HF	
CHKD:	TP	
APPD:		
CADD FILE:		

ZENON Environmental Inc.
ZEI – OAKVILLE ONTARIO
Water for the World

CUSTOMER:

TITLE: SOLIDS DEWATERING BLDG. PLAN (LARGE FACILITY)

SCALE: AS NOTED | SIZE: D | DRAWING NO. A-6 | SHEET 1 OF 1 | REV. C

ALWAYS THINK SAFETY

UNITED STATES
DEPARTMENT OF THE INTERIOR
BUREAU OF RECLAMATION
CENTRAL VALLEY PROJECT
WEST SAN JOAQUIN DIVISION – SAN LUIS UNIT – CALIFORNIA

DRAINAGE FEATURE
RE-EVALUATION FEASIBILITY STUDY
NORTHERLY AREA
SELENIUM BIOTREATMENT PLANT

RECEIVED _____

DENVER, COLORADO SEPTEMBER 11, 2008 | 805-D-10466

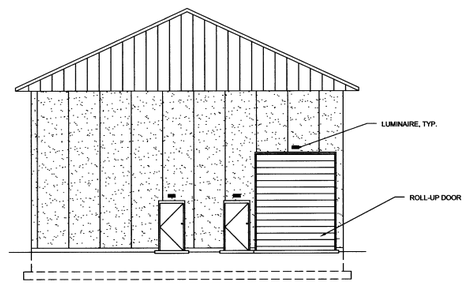

WEST ELEVATION

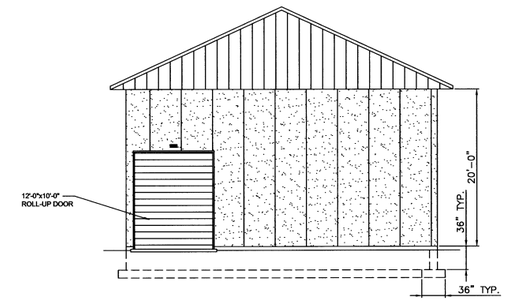

EAST ELEVATION

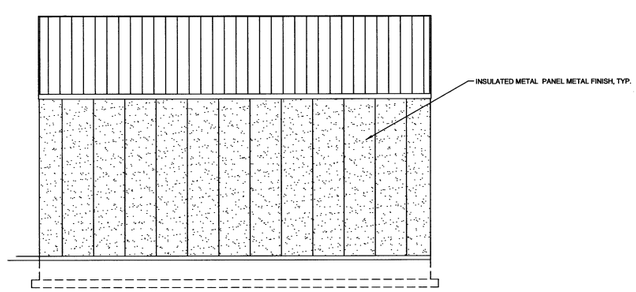

SOUTH ELEVATION

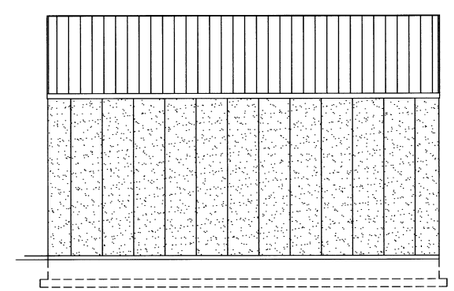

NORTH ELEVATION

PRELIMINARY
DO NOT USE FOR CONSTRUCTION

THIS DOCUMENT EMBODIES DESIGNS AND INFORMATION PROPRIETARY TO ZENON ENVIRONMENTAL INC. IT IS TO BE USED ONLY FOR THE PURPOSE AND BY THE ENTITY FOR WHICH IT WAS ORIGINALLY SUPPLIED. THE DOCUMENT MAY NOT BE DUPLICATED, DISCLOSED TO ANY OTHER PERSON OR ENTITY, OR USED FOR MANUFACTURE OF THE ITEM IN PART OR IN WHOLE WITHOUT THE PRIOR WRITTEN PERMISSION OF ZENON ENVIRONMENTAL INC.

NOTE:
ALL ELEVATIONS BASED UPON WESTLANDS NORTH SITE.

REV.	DATE	DESCRIPTION	ZONE	DSGN	APPD

APPROVAL		DATE (Y/M/D)
DRWN:	JH	
DSGN:	HF	
CHKD:	TP	
APPD:		
CADD FILE:	2001090002.DGN	
SCALE:	1/8"=1'-0"	

ZENON Environmental Inc.
ZEI – OAKVILLE ONTARIO
Water for the World

CUSTOMER:

TITLE: SOLIDS DEWATERING BLDG ELEVATIONS

SIZE: D | DRAWING NO. A-7 | SHEET 1 OF 1 | REV. C

ALWAYS THINK SAFETY

UNITED STATES
DEPARTMENT OF THE INTERIOR
BUREAU OF RECLAMATION
CENTRAL VALLEY PROJECT
WEST SAN JOAQUIN DIVISION – SAN LUIS UNIT – CALIFORNIA

DRAINAGE FEATURE
RE-EVALUATION FEASIBILITY STUDY
NORTHERLY AREA AND WESTLANDS WATER DISTRICT
SELENIUM BIOTREATMENT PLANT

RECEIVED _____
DENVER, COLORADO SEPTEMBER 11, 2008 | 805-D-10467

K

D (24x36)

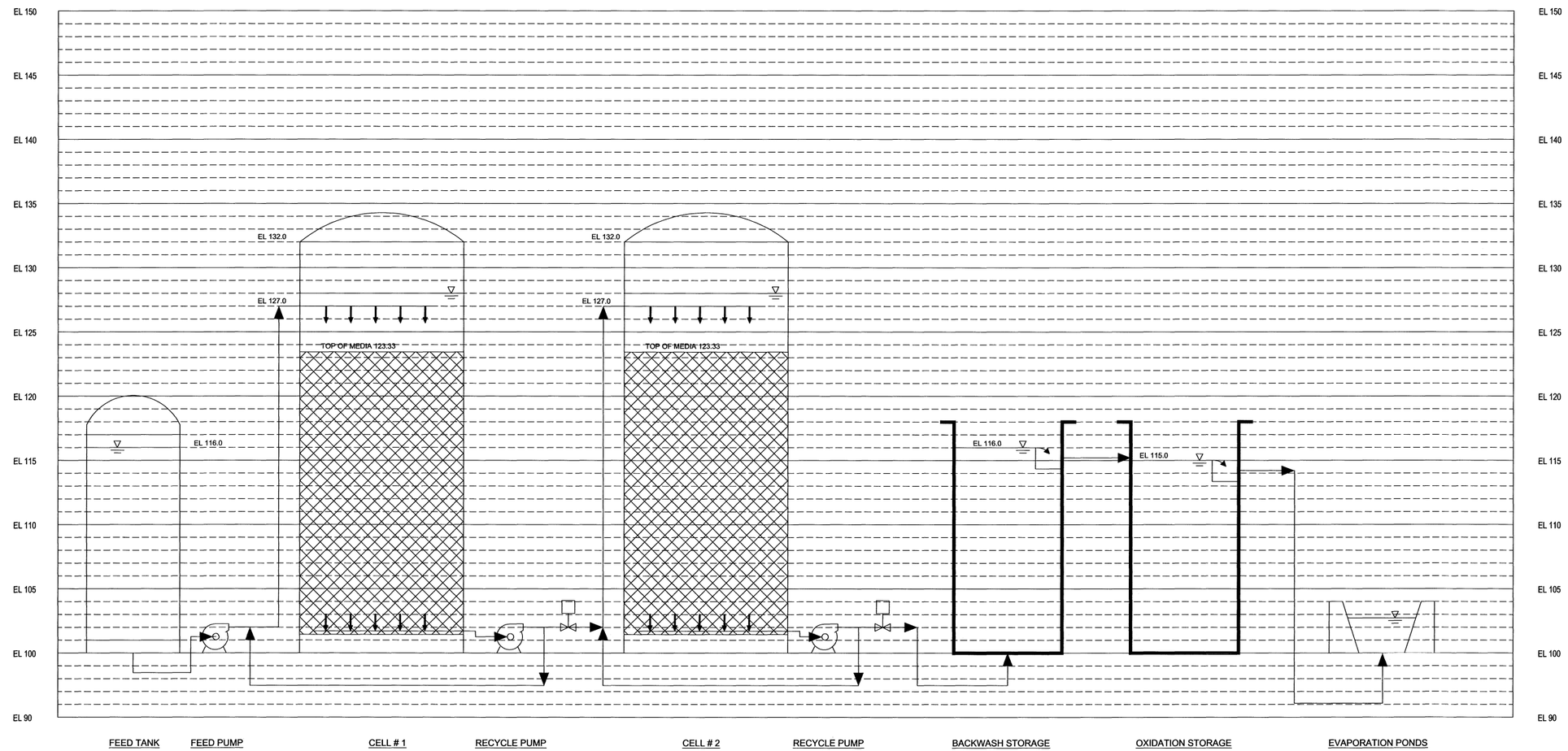

MAIN PROCESS HYDRAULIC PROFILE

NTS

REV.	DATE	DESCRIPTION	ZONE	DSGN	APPD
A	8/18/05	PRELIMINARY - NOT FOR CONSTRUCTION		HFF	

APPROVAL		DATE (Y/M/D)
DRWN:	HFF	12/23/05
DSGN:	HFF	12/23/05
CHKD:		
APPD:		

CADD FILE: FIG-1-PFD.DWG

ZENON Environmental Inc.

Water for the World

CUSTOMER:

TITLE: MAIN PROCESS HYDRAULIC PROFILE

SCALE: AS NOTED | SIZE: D | DRAWING NO. HP-1 | SHEET 1 OF 1 | REV. A

ALWAYS THINK SAFETY

UNITED STATES
DEPARTMENT OF THE INTERIOR
BUREAU OF RECLAMATION
CENTRAL VALLEY PROJECT
WEST SAN JOAQUIN DIVISION – SAN LUIS UNIT – CALIFORNIA

DRAINAGE FEATURE
RE–EVALUATION FEASIBILITY STUDY
NORTHERLY AREA AND WESTLANDS WATER DISTRICT
SELENIUM BIOTREATMENT PLANT

RECEIVED

DENVER, COLORADO SEPTEMBER 8, 2006 | 805–D–10468

May 09, 2007-10:29 AM

THIS DOCUMENT EMBODIES DESIGNS AND INFORMATION PROPRIETARY TO ZENON ENVIRONMENTAL INC. IT IS TO BE USED ONLY FOR THE PURPOSE AND BY THE ENTITY FOR WHICH IT WAS ORIGINALLY SUPPLIED. THE DOCUMENT MAY NOT BE DUPLICATED, DISCLOSED TO ANY OTHER PERSON OR ENTITY, OR USED FOR MANUFACTURE OF THE ITEM IN PART OR IN WHOLE WITHOUT THE PRIOR WRITTEN PERMISSION OF ZENON ENVIRONMENTAL INC.

D (24x36)

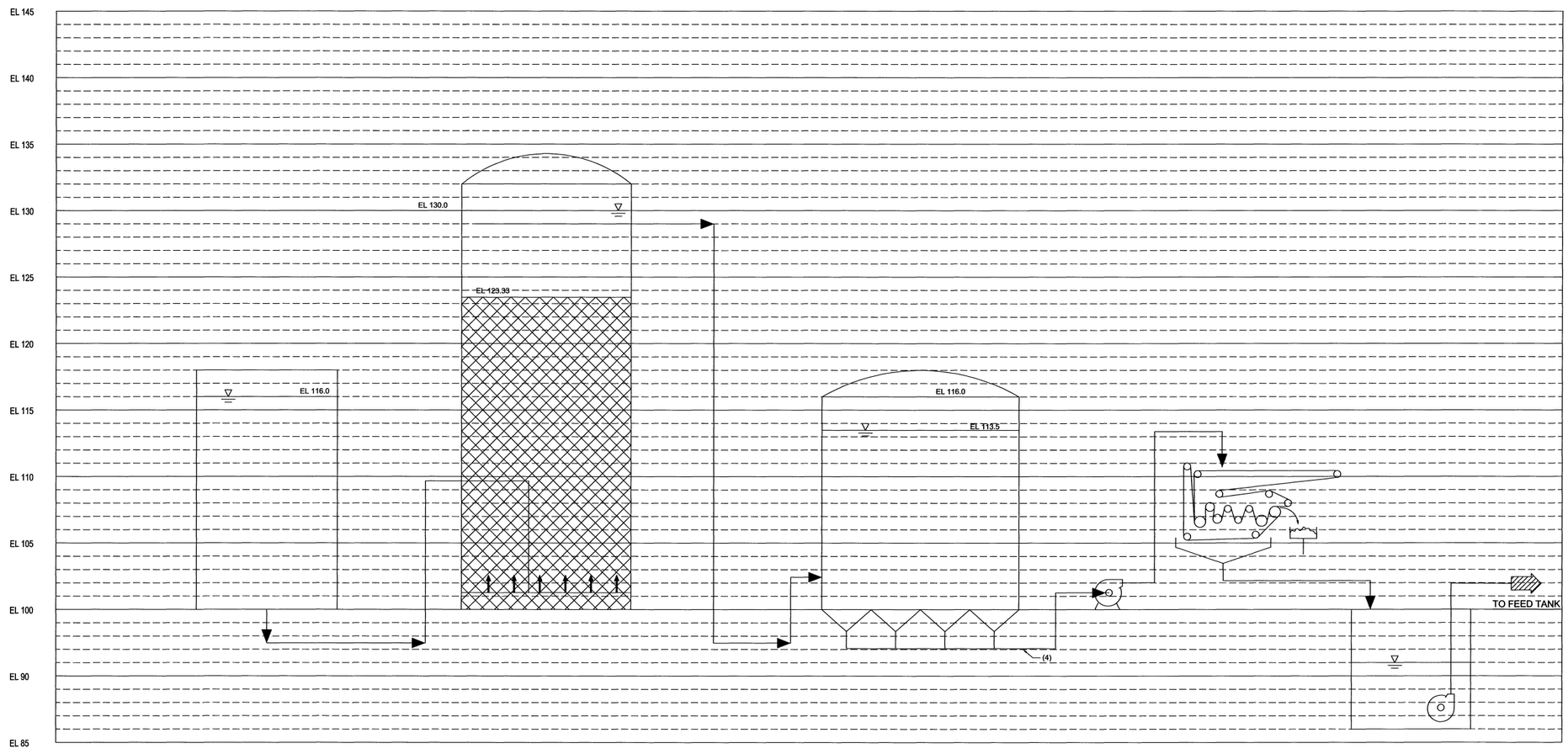

BACKWASH HYDRAULIC PROFILE

NTS

May 09, 2007-10:30 AM

THIS DOCUMENT EMBODIES DESIGNS AND INFORMATION PROPRIETARY TO ZENON ENVIRONMENTAL INC. IT IS TO BE USED ONLY FOR THE PURPOSE AND BY THE ENTITY FOR WHICH IT WAS ORIGINALLY SUPPLIED. THE DOCUMENT MAY NOT BE DUPLICATED, DISCLOSED TO ANY OTHER PERSON OR ENTITY, OR USED FOR MANUFACTURE OF THE ITEM IN PART OR IN WHOLE WITHOUT THE PRIOR WRITTEN PERMISSION OF ZENON ENVIRONMENTAL INC.

REV.	DATE	DESCRIPTION	ZONE	DSGN	APPD
A	8/18/05	PRELIMINARY – NOT FOR CONSTRUCTION		HFF	

APPROVAL		DATE (Y/M/D)
DRWN:	HFF	12/23/05
DSGN:	HFF	12/23/05
CHKD:		
APPD:		
CADD FILE:	FIG-1-PFD.DWG	
SCALE:	AS NOTED	

ZENON Environmental Inc.

Water for the World

CUSTOMER:

TITLE: BACKWASH HYDRAULIC PROFILE

SIZE: D | DRAWING NO. HP-2 | SHEET 1 OF 1 | REV. A

ALWAYS THINK SAFETY

UNITED STATES
DEPARTMENT OF THE INTERIOR
BUREAU OF RECLAMATION
CENTRAL VALLEY PROJECT
WEST SAN JOAQUIN DIVISION – SAN LUIS UNIT – CALIFORNIA

DRAINAGE FEATURE
RE–EVALUATION FEASIBILITY STUDY
NORTHERLY AREA AND WESTLANDS WATER DISTRICT
SELENIUM BIOTREATMENT PLANT

RECEIVED

DENVER, COLORADO SEPTEMBER 8, 2008 805–D–10469

D (24x36)

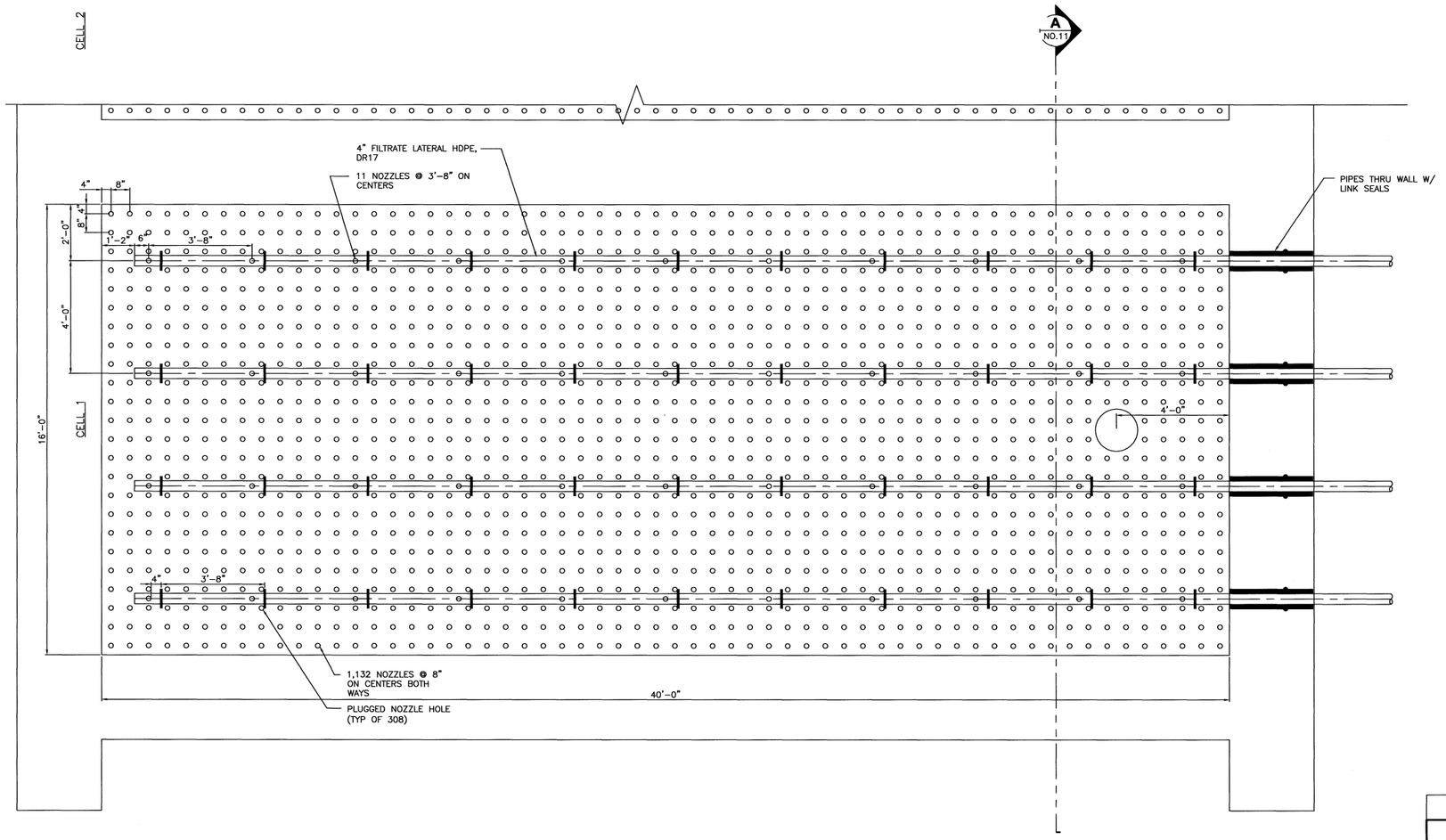

PRELIMINARY

DO NOT USE FOR CONSTRUCTION

THIS DOCUMENT EMBODIES DESIGNS AND INFORMATION PROPRIETARY TO ZENON ENVIRONMENTAL INC. IT IS TO BE USED ONLY FOR THE PURPOSE AND BY THE ENTITY FOR WHICH IT WAS ORIGINALLY SUPPLIED. THE DOCUMENT MAY NOT BE DUPLICATED, DISCLOSED TO ANY OTHER PERSON OR ENTITY, OR USED FOR MANUFACTURE OF THE ITEM IN PART OR IN WHOLE WITHOUT THE PRIOR WRITTEN PERMISSION OF ZENON ENVIRONMENTAL INC.

BIOREACTOR LOWER LEVEL PIPING PLAN
(CELL 1 & CELL 2 IN EACH TRAIN ARE IDENTICAL)

0 1' 2'

REV.	DATE	DESCRIPTION	ZONE	DSGN	APPD

APPROVAL		DATE (Y/M/D)
DRWN:	JH	
DSGN:	HF	
CHKD:	TP	
APPD:		
CADD FILE:		
SCALE:	AS NOTED	

ZENON Environmental Inc.
ZEI – OAKVILLE ONTARIO
Water for the World

CUSTOMER:

TITLE: BIOREACTOR LOWER TANK PLAN (TYPICAL ALL CELLS)

SIZE: D | DRAWING NO. M-1 | SHEET 1 OF 1 | REV. A

ALWAYS THINK SAFETY

UNITED STATES
DEPARTMENT OF THE INTERIOR
BUREAU OF RECLAMATION
CENTRAL VALLEY PROJECT
WEST SAN JOAQUIN DIVISION – SAN LUIS UNIT – CALIFORNIA

DRAINAGE FEATURE
RE-EVALUATION FEASIBILITY STUDY
NORTHERLY AREA AND WESTLANDS WATER DISTRICT
SELENIUM BIOTREATMENT PLANT

RECEIVED John Z. Walz
DENVER, COLORADO SEPTEMBER 11, 2006

805-D-10470

K

D (24x36)

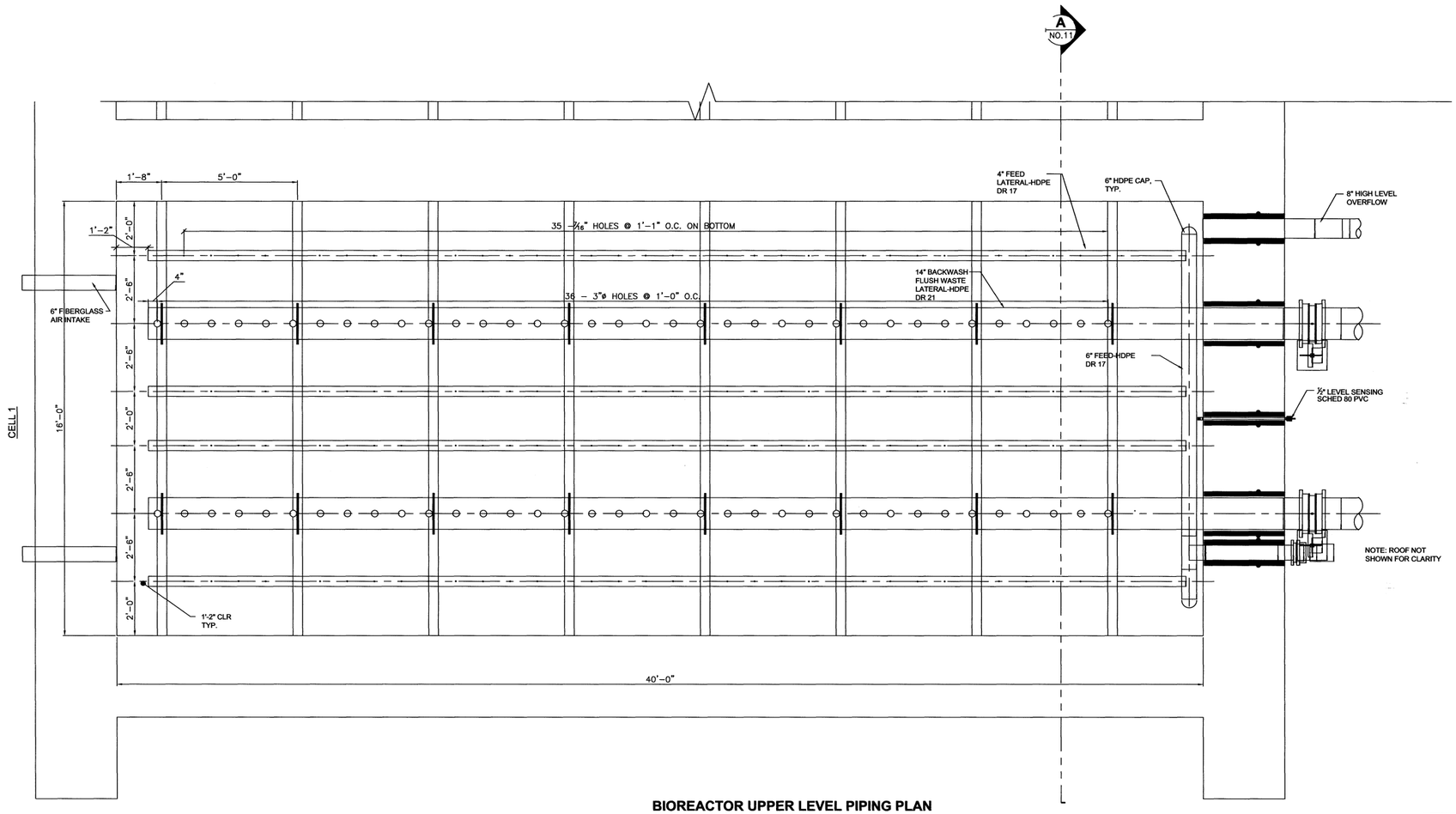

BIOREACTOR UPPER LEVEL PIPING PLAN
(CELL 1 & CELL 2 ARE IDENTICAL)

0 1' 2'

PRELIMINARY
DO NOT USE FOR CONSTRUCTION

THIS DOCUMENT EMBODIES DESIGNS AND INFORMATION PROPRIETARY TO ZENON ENVIRONMENTAL INC. IT IS TO BE USED ONLY FOR THE PURPOSE AND BY THE ENTITY FOR WHICH IT WAS ORIGINALLY SUPPLIED. THE DOCUMENT MAY NOT BE DUPLICATED, DISCLOSED TO ANY OTHER PERSON OR ENTITY, OR USED FOR MANUFACTURE OF THE ITEM IN PART OR IN WHOLE WITHOUT THE PRIOR WRITTEN PERMISSION OF ZENON ENVIRONMENTAL INC.

REV.	DATE	DESCRIPTION	ZONE	DSGN	APPD

APPROVAL		DATE (Y/M/D)
DRWN:	JH	
DSGN:	HF	
CHKD:	TP	
APPD:		
CADD FILE:		
SCALE:	AS NOTED	

ZENON Environmental Inc.
ZEI – OAKVILLE ONTARIO
Water for the World

CUSTOMER:

TITLE: BIOREACTOR UPPER TANK PLAN (TYPICAL ALL CELLS)

SIZE: D DRAWING NO. M-2 SHEET 1 OF 1 REV. A

ALWAYS THINK SAFETY

UNITED STATES
DEPARTMENT OF THE INTERIOR
BUREAU OF RECLAMATION
CENTRAL VALLEY PROJECT
WEST SAN JOAQUIN DIVISION – SAN LUIS UNIT – CALIFORNIA

DRAINAGE FEATURE
RE-EVALUATION FEASIBILITY STUDY
NORTHERLY AREA AND WESTLANDS WATER DISTRICT
SELENIUM BIOTREATMENT PLANT

RECEIVED

DENVER, COLORADO SEPTEMBER 11, 2008 805-D-10471

D (24x36)

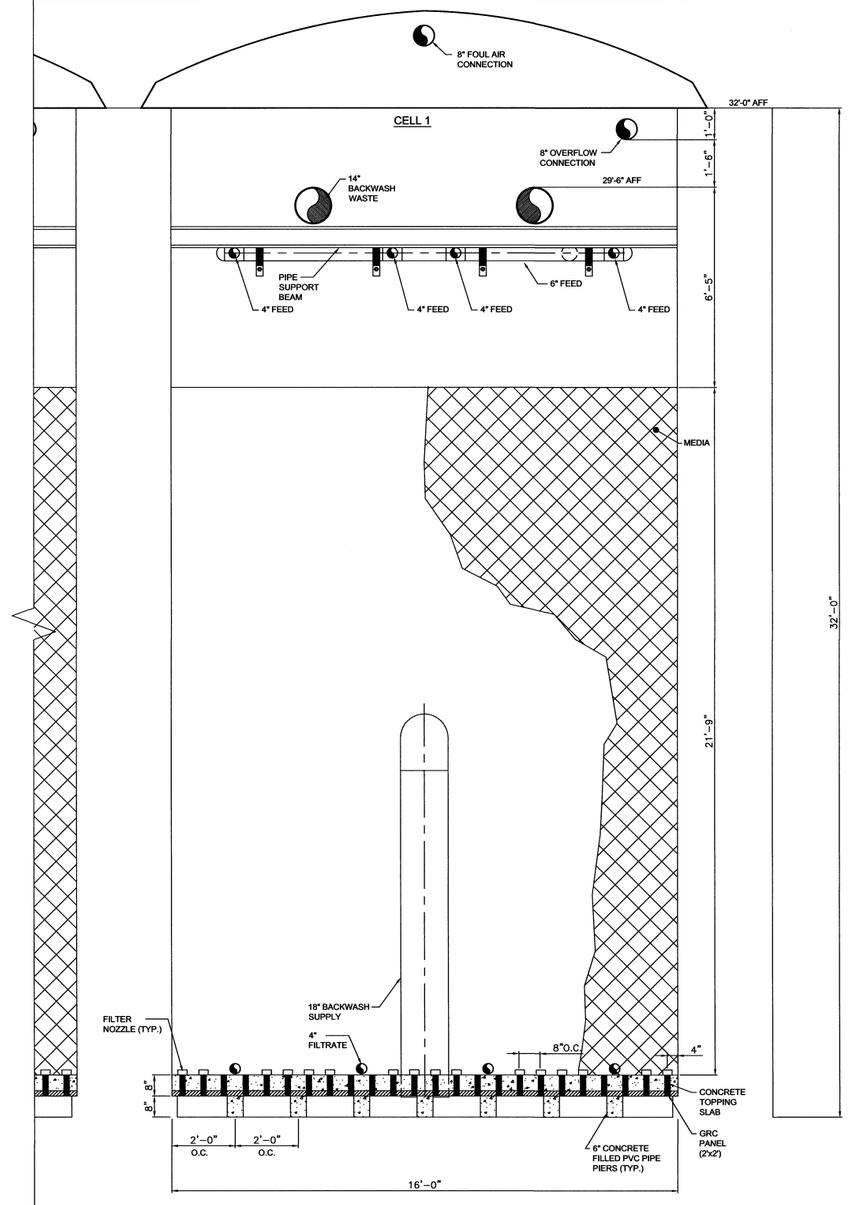

BIOREACTOR SECTION
(CELL 1 & CELL 2 ARE IDENTICAL) A

NTS

DWG NO. 9
DWG NO. 10

PRELIMINARY
DO NOT USE FOR CONSTRUCTION

THIS DOCUMENT EMBODIES DESIGNS AND INFORMATION PROPRIETARY TO ZENON ENVIRONMENTAL INC. IT IS TO BE USED ONLY FOR THE PURPOSE, AND BY THE ENTITY FOR WHOM IT WAS ORIGINALLY SUPPLIED. THE DOCUMENT MAY NOT BE DUPLICATED, DISCLOSED TO ANY OTHER PERSON OR ENTITY, OR USED FOR MANUFACTURE OF THE ITEM IN PART OR IN WHOLE WITHOUT THE PRIOR WRITTEN PERMISSION OF ZENON ENVIRONMENTAL INC.

REV.	DATE	DESCRIPTION	ZONE	DSGN	APPD

APPROVAL		DATE (Y/M/D)
DRWN:	JH	
DSGN:	HF	
CHKD:	TP	
APPD:		
CADD FILE:		
SCALE:	AS NOTED	

ZENON Environmental Inc.
Water for the World
ZEI – OAKVILLE ONTARIO

CUSTOMER:

TITLE: BIOREACTOR SECTION (TYPICAL ALL CELLS)

SIZE: D | DRAWING NO. M-3 | SHEET 1 OF 1 | REV. A

ALWAYS THINK SAFETY

UNITED STATES
DEPARTMENT OF THE INTERIOR
BUREAU OF RECLAMATION
CENTRAL VALLEY PROJECT
WEST SAN JOAQUIN DIVISION – SAN LUIS UNIT – CALIFORNIA
DRAINAGE FEATURE
RE–EVALUATION FEASIBILITY STUDY
NORTHERLY AREA AND WESTLANDS WATER DISTRICT
SELENIUM BIOTREATMENT PLANT

RECEIVED John T. Wolf
DENVER, COLORADO SEPTEMBER 11, 2006 | 805–D–10472

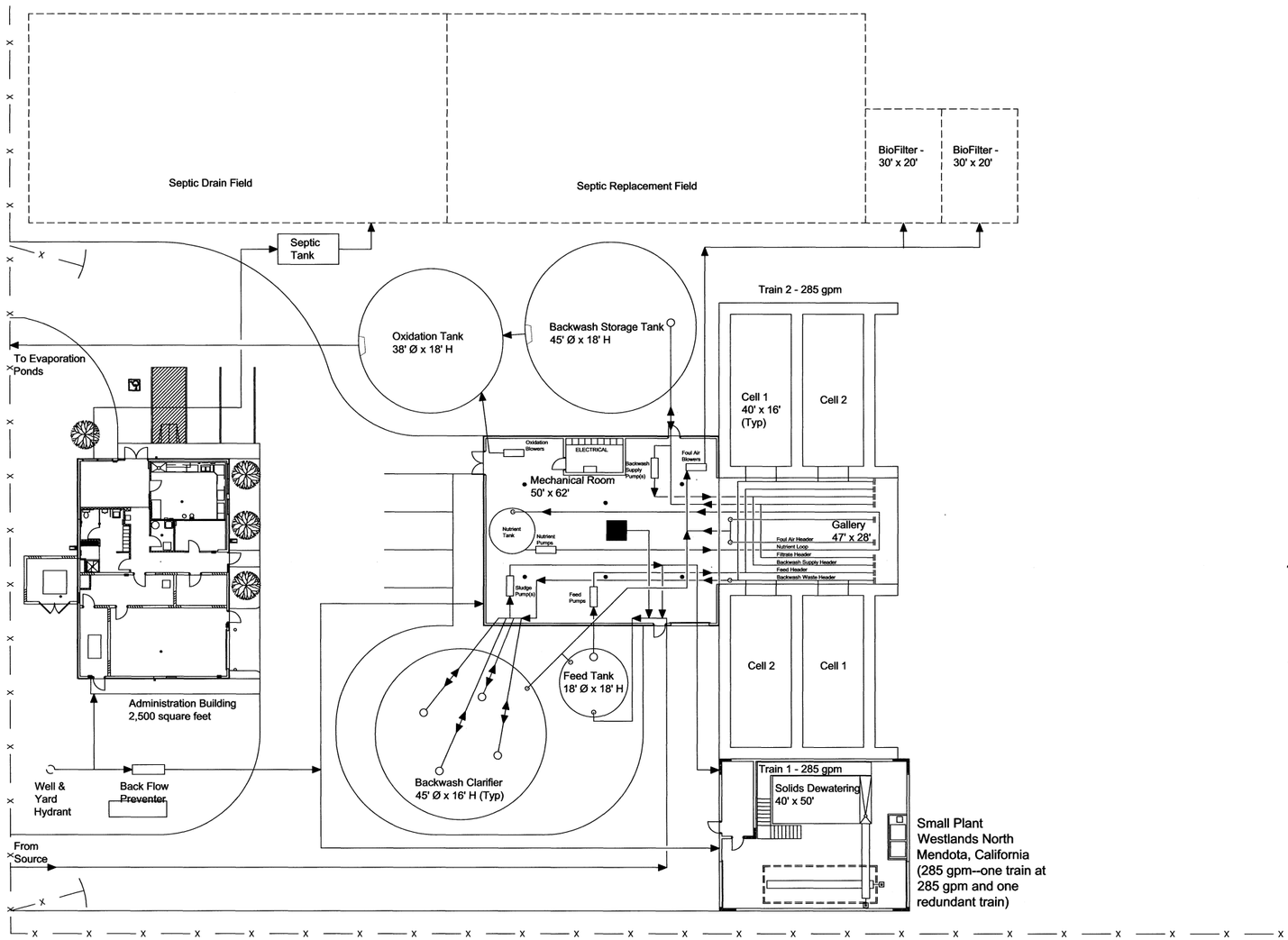

Small Plant
Westlands North
Mendota, California
(285 gpm--one train at 285 gpm and one redundant train)

PRELIMINARY
DO NOT USE FOR CONSTRUCTION

THIS DOCUMENT EMBODIES DESIGNS AND INFORMATION PROPRIETARY TO ZENON ENVIRONMENTAL INC. IT IS TO BE USED ONLY FOR THE PURPOSE AND BY THE ENTITY FOR WHICH IT WAS ORIGINALLY SUPPLIED. THE DOCUMENT MAY NOT BE DUPLICATED, DISCLOSED TO ANY OTHER PERSON OR ENTITY, OR USED FOR MANUFACTURE OF THE ITEM IN PART OR IN WHOLE WITHOUT THE PRIOR WRITTEN PERMISSION OF ZENON ENVIRONMENTAL INC.

PIPELINE CENTERLINE ON ON LAYOUT PLAN
NTS

REV.	DATE	DESCRIPTION	ZONE	DSGN	APPD
APPROVAL		DATE (Y/M/D)			
DRWN:	JH				
DSGN:	HF				
CHKD:	TP				
APPD:					
CADD FILE:					

ZENON Environmental Inc.
ZEI – OAKVILLE ONTARIO
Water for the World

CUSTOMER:
TITLE: PIPE CENTERLINE LAYOUT PLAN (SMALL)
SCALE: AS NOTED
SIZE: D
DRAWING NO. M-4
SHEET 1 OF 1
REV. B

ALWAYS THINK SAFETY

UNITED STATES
DEPARTMENT OF THE INTERIOR
BUREAU OF RECLAMATION
CENTRAL VALLEY PROJECT
WEST SAN JOAQUIN DIVISION – SAN LUIS UNIT – CALIFORNIA

DRAINAGE FEATURE
RE-EVALUATION FEASIBILITY STUDY
WESTLANDS WATER DISTRICT
SELENIUM BIOTREATMENT PLANT

RECEIVED
DENVER, COLORADO SEPTEMBER 8, 2006
805-D-10473

D (24x36)

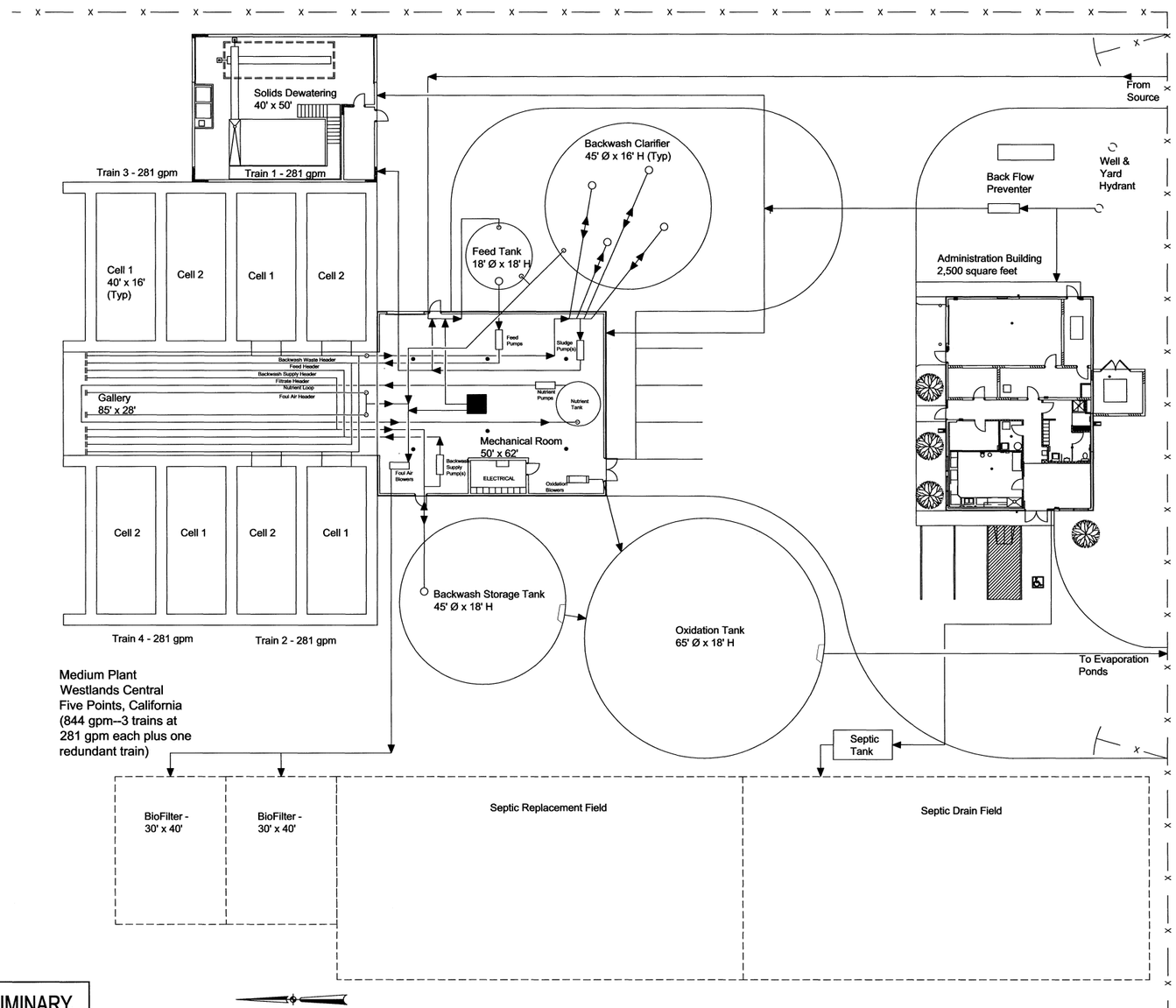

PRELIMINARY

DO NOT USE FOR CONSTRUCTION

PIPELINE CENTERLINE ON ON LAYOUT PLAN

NTS

THIS DOCUMENT EMBODIES DESIGNS AND INFORMATION PROPRIETARY TO ZENON ENVIRONMENTAL INC. IT IS TO BE USED ONLY FOR THE PURPOSE AND BY THE ENTITY FOR WHICH IT WAS ORIGINALLY SUPPLIED. THE DOCUMENT MAY NOT BE DUPLICATED, DISCLOSED TO ANY OTHER PERSON OR ENTITY, OR USED FOR MANUFACTURE OF THE ITEM IN PART OR IN WHOLE WITHOUT THE PRIOR WRITTEN PERMISSION OF ZENON ENVIRONMENTAL INC.

REV.	DATE	DESCRIPTION	ZONE	DSGN	APPD

APPROVAL		DATE (Y/M/D)
DRWN:	JH	
DSGN:	HF	
CHKD:	TP	
APPD:		
CADD FILE:		
SCALE:	AS NOTED	

ZENON Environmental Inc.

ZEI – OAKVILLE ONTARIO

Water for the World

CUSTOMER:

TITLE: PIPE CENTERLINE LAYOUT PLAN (MEDIUM)

SIZE: D DRAWING NO. M-5 SHEET 1 OF 1 REV. C

ALWAYS THINK SAFETY

UNITED STATES
DEPARTMENT OF THE INTERIOR
BUREAU OF RECLAMATION

CENTRAL VALLEY PROJECT

WEST SAN JOAQUIN DIVISION – SAN LUIS UNIT – CALIFORNIA

DRAINAGE FEATURE RE-EVALUATION FEASIBILITY STUDY

WESTLANDS WATER DISTRICT

SELENIUM BIOTREATMENT PLANT

RECEIVED John L Walp

DENVER, COLORADO SEPTEMBER 11, 2006 805-D-10474

D (24x36)

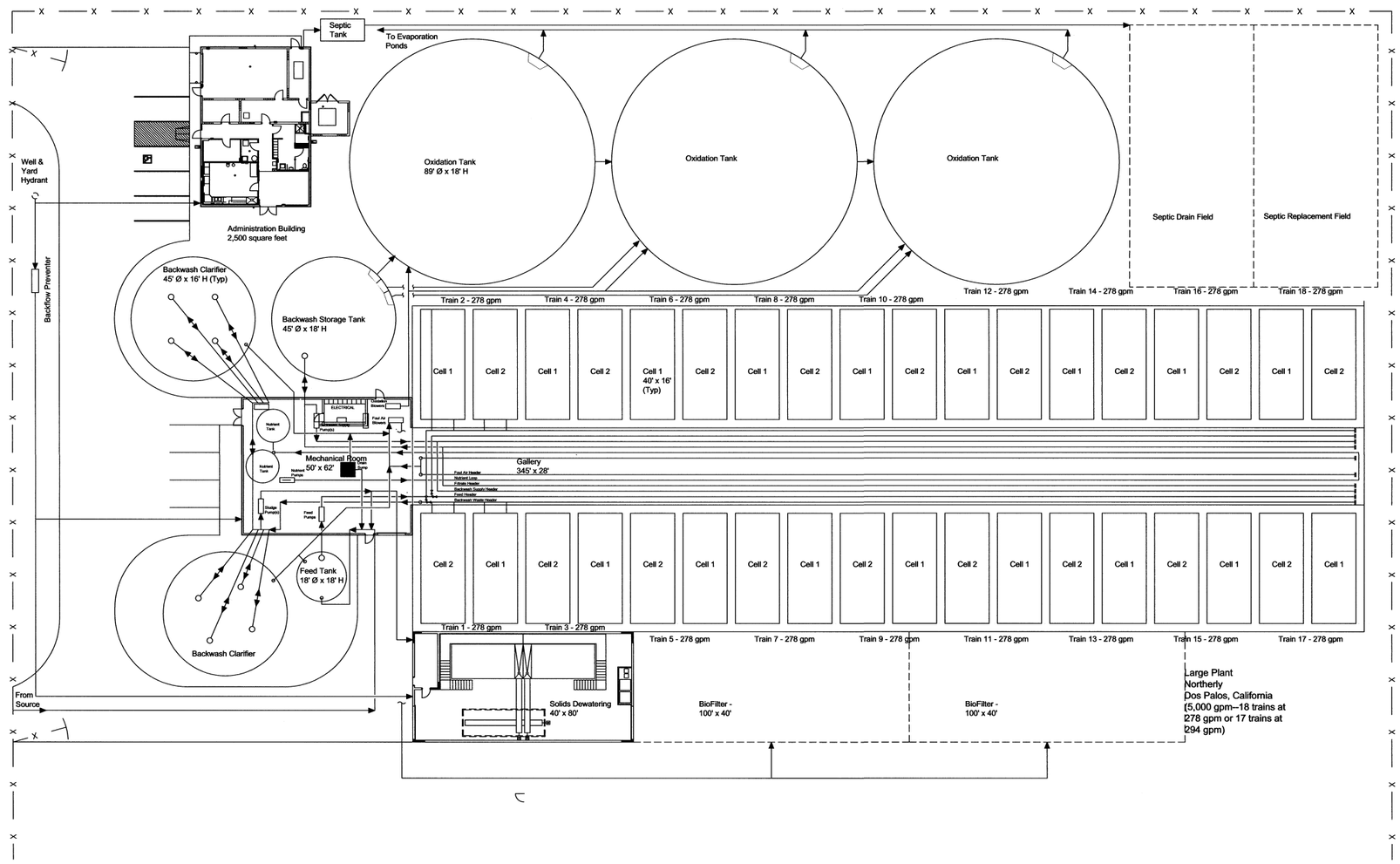

PIPELINE CENTERLINE ON ON LAYOUT PLAN

NTS

PRELIMINARY

DO NOT USE FOR CONSTRUCTION

THIS DOCUMENT EMBODIES DESIGNS AND INFORMATION PROPRIETARY TO ZENON ENVIRONMENTAL INC. IT IS TO BE USED ONLY FOR THE PURPOSE AND BY THE ENTITY FOR WHICH IT WAS ORIGINALLY SUPPLIED. THE DOCUMENT MAY NOT BE DUPLICATED, DISCLOSED TO ANY OTHER PERSON OR ENTITY, OR USED FOR MANUFACTURE OF THE ITEM IN PART OR IN WHOLE WITHOUT THE PRIOR WRITTEN PERMISSION OF ZENON ENVIRONMENTAL INC.

REV.	DATE	DESCRIPTION	ZONE	DSGN	APPD

APPROVAL		DATE (Y/M/D)
DRWN:	JH	
DSGN:	HF	
CHKD:	TP	
APPD:		
CADD FILE:		
SCALE:	AS NOTED	

ZENON Environmental Inc.
ZEI – OAKVILLE ONTARIO
Water for the World

CUSTOMER:

TITLE: PIPE CENTERLINE LAYOUT PLAN (LARGE)

SIZE: D DRAWING NO. M-6 SHEET 1 OF 1 REV. B

ALWAYS THINK SAFETY

UNITED STATES
DEPARTMENT OF THE INTERIOR
BUREAU OF RECLAMATION

CENTRAL VALLEY PROJECT
WEST SAN JOAQUIN DIVISION – SAN LUIS UNIT – CALIFORNIA

DRAINAGE FEATURE RE-EVALUATION FEASIBILITY STUDY

WESTLANDS WATER DISTRICT

SELENIUM BIOTREATMENT PLANT

RECEIVED

805-D-10475

D (24x36)

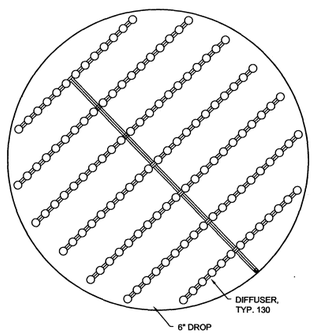

38' DIA OXIDATION TANK DIFFUSER LAYOUT (SMALL)

0 1' 8'

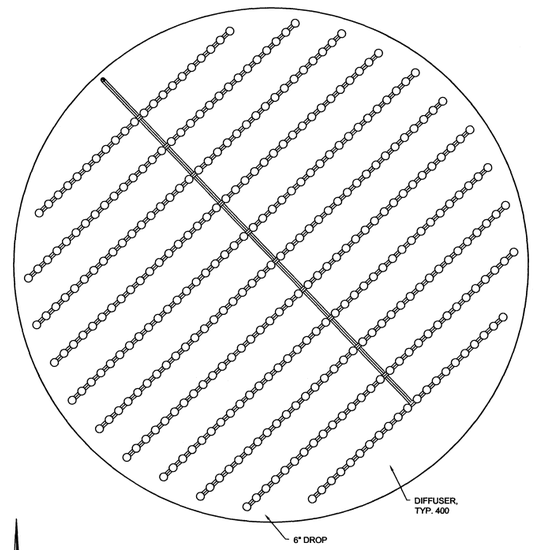

65' DIA OXIDATION TANK DIFFUSER LAYOUT (MEDIUM)

0 1' 8'

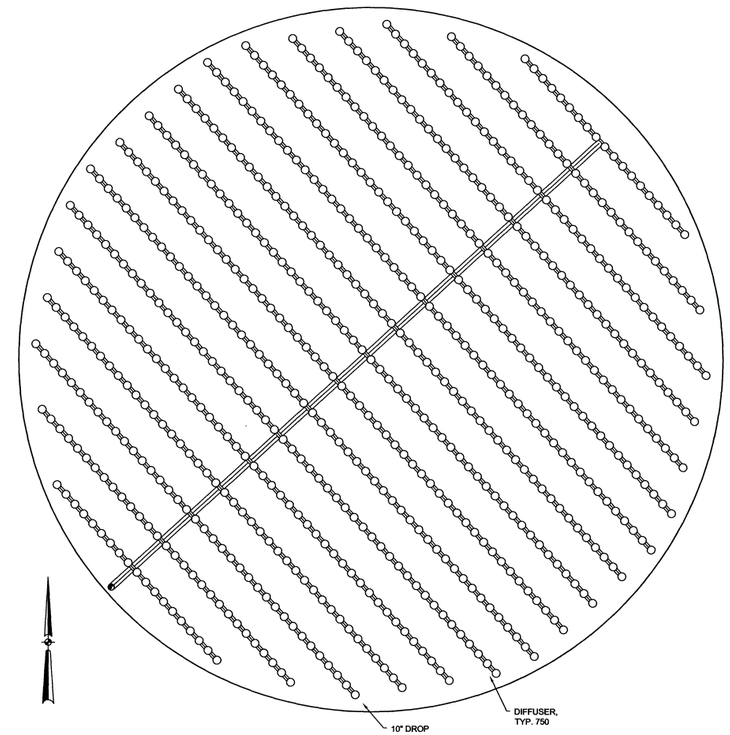

89' DIA OXIDATION TANK DIFFUSER LAYOUT (LARGE, TYP. 3)

0 1' 8'

PRELIMINARY

DO NOT USE FOR CONSTRUCTION

THIS DOCUMENT EMBODIES DESIGNS AND INFORMATION PROPRIETARY TO ZENON ENVIRONMENTAL INC. IT IS TO BE USED ONLY FOR THE PURPOSE AND BY THE ENTITY FOR WHICH IT WAS ORIGINALLY SUPPLIED. THE DOCUMENT MAY NOT BE DUPLICATED, DISCLOSED TO ANY OTHER PERSON OR ENTITY, OR USED FOR MANUFACTURE OF THE ITEM IN PART OR IN WHOLE WITHOUT THE PRIOR WRITTEN PERMISSION OF ZENON ENVIRONMENTAL INC.

REV.	DATE	DESCRIPTION	ZONE	DSGN	APPD

APPROVAL		DATE (Y/M/D)
DRWN:	JH	
DSGN:	HF	
CHKD:		
APPD:		
CADD FILE:		
SCALE:	AS NOTED	

ZENON Environmental Inc.

ZEI – OAKVILLE ONTARIO

Water for the World

CUSTOMER:

TITLE: OXIDATION TANK DIFFUSER LAYOUT (SMALL, MEDIUM, AND LARGE)

SIZE: D DRAWING NO. M-7 SHEET 1 OF 1 REV. A

ALWAYS THINK SAFETY

UNITED STATES
DEPARTMENT OF THE INTERIOR
BUREAU OF RECLAMATION

CENTRAL VALLEY PROJECT

WEST SAN JOAQUIN DIVISION – SAN LUIS UNIT – CALIFORNIA

DRAINAGE FEATURE
RE–EVALUATION FEASIBILITY STUDY

NORTHERLY AREA AND WESTLANDS WATER DISTRICT

SELENIUM BIOTREATMENT PLANT

RECEIVED John Z Wolf

DENVER, COLORADO SEPTEMBER 11, 2008

805–D–10476

D (24x36)

K

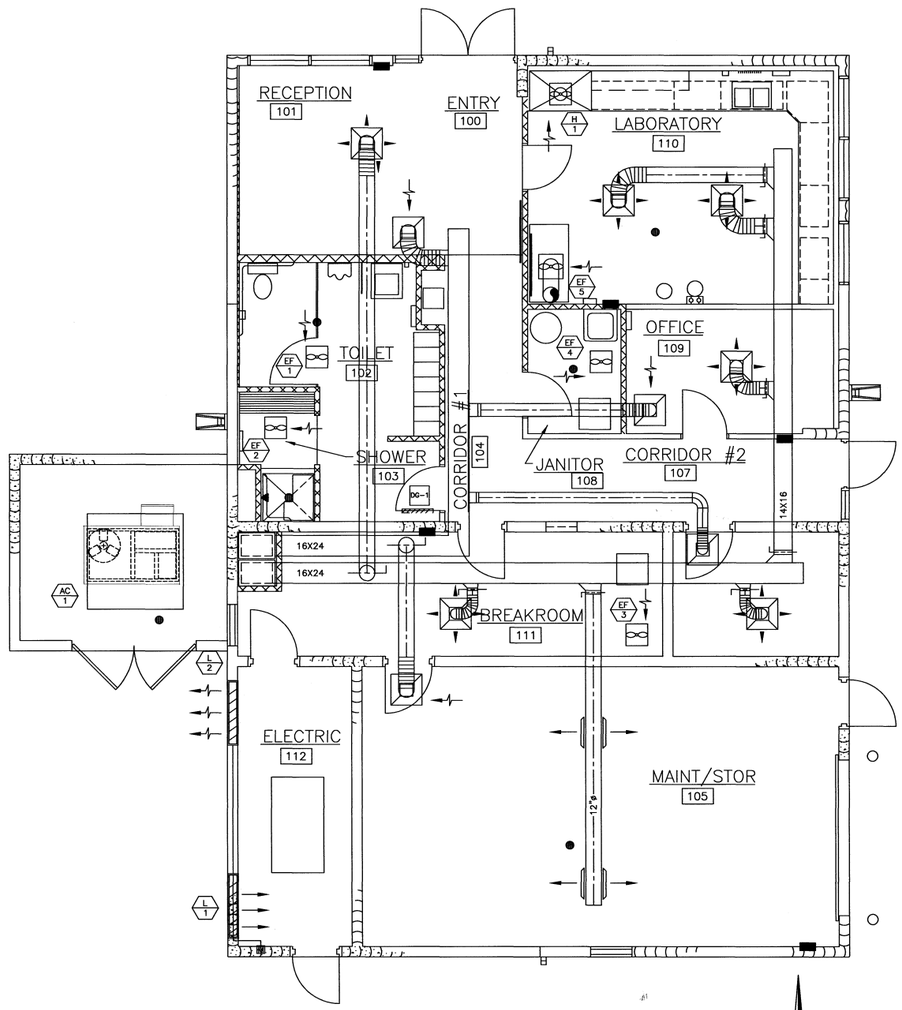

ADMINISTRATION BLDG
HVAC PLAN

0 1' 4'

REQUIRED OUTSIDE AIR	
AC-1	+ = ____ CFM
AC-2	+ = ____ CFM
AC-3	+ = ____ CFM
MAU-1	+ = ____ CFM
SF-1	+ = ____ CFM
TOTAL	+ = ____ CFM
BUILDING EXHAUST	
EF-1	- = ____ CFM
EF-2	- = ____ CFM
EF-3	- = ____ CFM
EF-4	- = ____ CFM
TOTAL	- = ____ CFM
BUILDING PRESSURIZATION	____ CFM

BUILDING AIR BALANCE
NOT TO SCALE

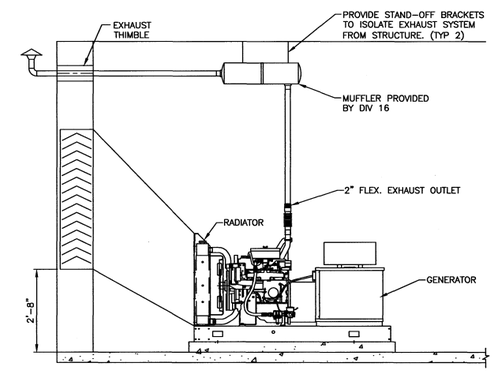

GENERATOR VENTILATION DETAIL

REV.	DATE	DESCRIPTION	ZONE	DSGN	APPD

APPROVAL		DATE (Y/M/D)
DRWN:	JH	
DSGN:	HF	
CHKD:	TP	
APPD:		
CADD FILE:	2001090002.DGN	
SCALE:	AS NOTED	

ZENON Environmental Inc.
ZEI - OAKVILLE ONTARIO
Water for the World

CUSTOMER:

TITLE: ADMINISTRATION BLDG HVAC PLAN

SIZE: D DRAWING NO. H-1 SHEET 1 OF 1 REV. B

ALWAYS THINK SAFETY

UNITED STATES
DEPARTMENT OF THE INTERIOR
BUREAU OF RECLAMATION
CENTRAL VALLEY PROJECT
WEST SAN JOAQUIN DIVISION - SAN LUIS UNIT - CALIFORNIA
DRAINAGE FEATURE
RE-EVALUATION FEASIBILITY STUDY
NORTHERLY AREA AND WESTLANDS WATER DISTRICT
SELENIUM BIOTREATMENT PLANT

RECEIVED Paul S. Schlein 5-11-2007
DENVER, COLORADO SEPTEMBER 8, 2006 805-D-10477

THIS DOCUMENT EMBODIES DESIGNS AND INFORMATION PROPRIETARY TO ZENON ENVIRONMENTAL INC. IT IS TO BE USED ONLY FOR THE PURPOSE AND BY THE ENTITY FOR WHICH IT WAS ORIGINALLY SUPPLIED. THE DOCUMENT MAY NOT BE DUPLICATED, DISCLOSED TO ANY OTHER PERSON OR ENTITY, OR USED FOR MANUFACTURE OF THE ITEM IN PART OR IN WHOLE WITHOUT THE PRIOR WRITTEN PERMISSION OF ZENON ENVIRONMENTAL INC.

D (24x36)

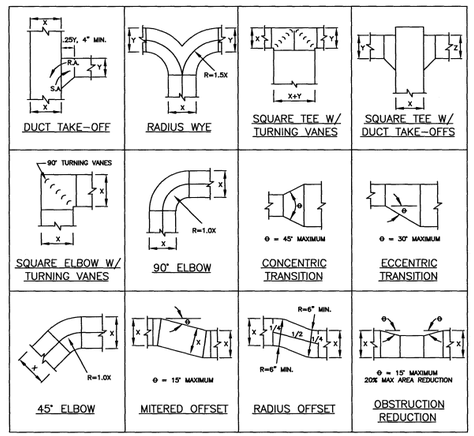

NOTE:
ALL DUCTWORK TRANSITIONS SHALL BE CONSTRUCTED AND INSTALLED TO SMACNA AND THE ABOVE NOTED STANDARDS. ANY DEVIATIONS SHALL BE COORDINATED WITH THE ENGINEER.

RECTANGULAR DUCT FITTING DETAILS
NTS

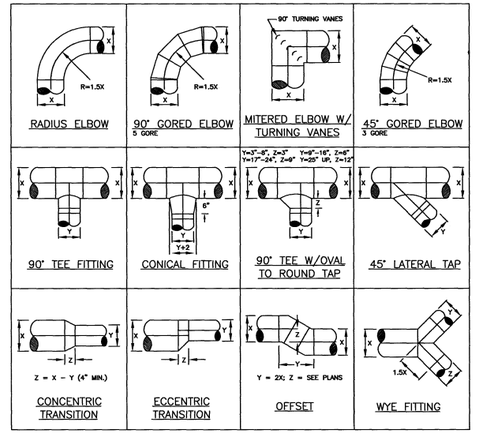

NOTE:
ALL DUCTWORK TRANSITIONS SHALL BE CONSTRUCTED AND INSTALLED TO SMACNA AND THE ABOVE NOTED STANDARDS. ANY DEVIATIONS SHALL BE COORDINATED WITH THE ENGINEER.

ROUND DUCT FITTING DETAILS
NTS

METAL FASTENERS:
OMARK INSUL-PINS, DURO DYNE FASTENERS OR GRIP NAILS INSTALLED BY GRIP NAIL AIR HAMMER OR AUTO FASTENER EQUIP.

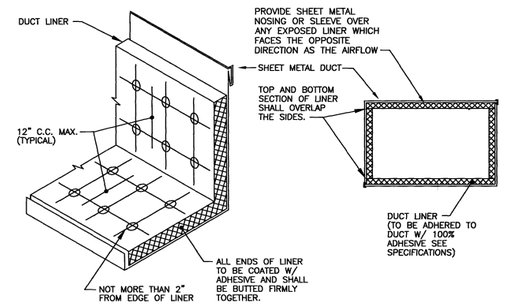

DUCT LINER DETAIL
NOT TO SCALE

NOTES:
1. FOR TAKE-OFFS LARGER THAN 12" DIAMETER USE A FACTORY MANUFACTURED DAMPER. LOUVERS & DAMPERS, INC. MODEL CD-600 WITH A LOCKING HAND QUADRANT OR EQUAL.
2. ROD CONTINUOUS ON 2" W.G. CLASS AND ON ALL DAMPERS OVER 12" DIAMETER.
3. BLADE 22 GAGE MIN. BUT NOT LESS THAN TWO GAGES MORE THAN THE DUCT GAGE.
4. PROVIDE REMOTE CEILING OPERATOR WHERE DAMPER IS INACCESSIBLE.
5. FOR DUCTS OVER 12" HIGH USE MULTIPLE BLADE DAMPERS. (SEE FIG. C)

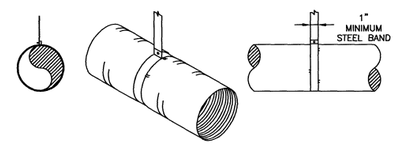

OPTION 1

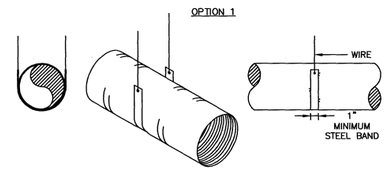

OPTION 2

NOTES:
1. SUPPORT SYSTEM MUST NOT DAMAGE OR CAUSE OUT OF ROUND SHAPE.
2. FLEX DUCT MUST NOT EXCEED 6'-0" FROM CONNECTION TO TERMINATION.
3. MAXIMUM LENGTH BETWEEN SUPPORTS MUST NOT EXCEED 3'-0" O.C.
4. ATTACH BANDS OR WIRES TO SUPPORT STRUCTURE ABOVE.
5. FLEXIBLE DUCTWORK SHALL BE FLEXMASTER TYPE 4M OR AN APPROVED EQUAL.
6. FLEXIBLE DUCTWORK SHALL BE INSULATED WITH A MINIMUM R VALUE OF 5.

FLEXIBLE DUCT SUPPORT
N.T.S.

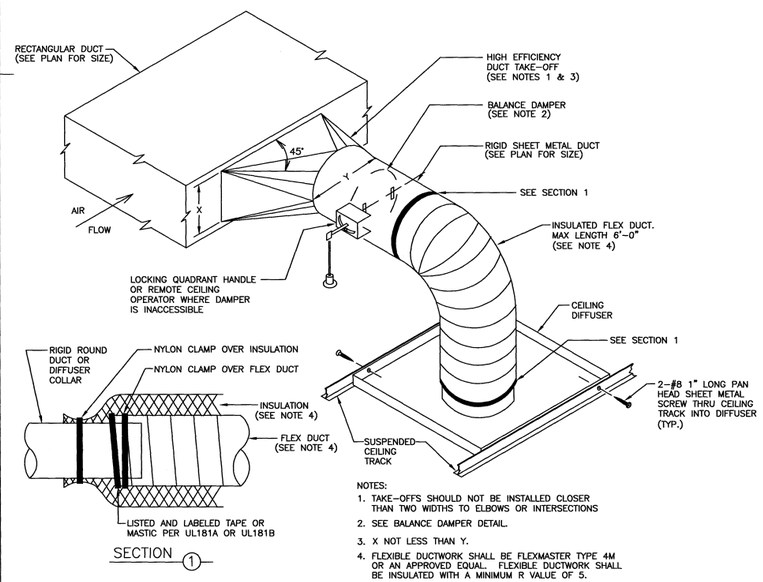

NOTES:
1. TAKE-OFFS SHOULD NOT BE INSTALLED CLOSER THAN TWO WIDTHS TO ELBOWS OR INTERSECTIONS
2. SEE BALANCE DAMPER DETAIL.
3. X NOT LESS THAN Y.
4. FLEXIBLE DUCTWORK SHALL BE FLEXMASTER TYPE 4M OR AN APPROVED EQUAL. FLEXIBLE DUCTWORK SHALL BE INSULATED WITH A MINIMUM R VALUE OF 5.

HIGH EFFICIENCY TAKE-OFF DETAIL
NOT TO SCALE

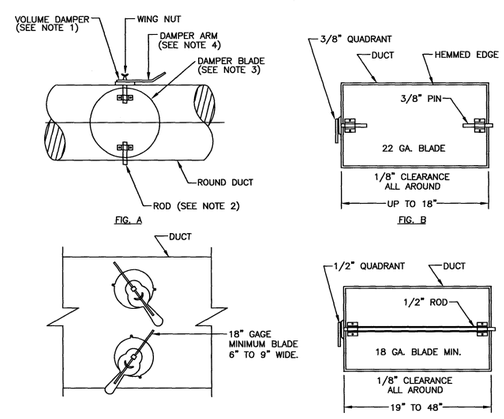

BALANCE DAMPER DETAIL
NTS

THIS DOCUMENT EMBODIES DESIGNS AND INFORMATION PROPRIETARY TO ZENON ENVIRONMENTAL INC. IT IS TO BE USED ONLY FOR THE PURPOSE AND BY THE ENTITY FOR WHICH IT WAS ORIGINALLY SUPPLIED. THE DOCUMENT MAY NOT BE DUPLICATED, DISCLOSED TO ANY OTHER PERSON OR ENTITY, OR USED FOR MANUFACTURE OF THE ITEM IN PART OR IN WHOLE WITHOUT THE PRIOR WRITTEN PERMISSION OF ZENON ENVIRONMENTAL INC.

REV.	DATE	DESCRIPTION	ZONE	DSGN	APPD
APPROVAL		DATE (Y/M/D)			
DRWN:	JH				
DSGN:	HF				
CHKD:					
APPD:					
CADD FILE:	200109D002.DGN				
SCALE:	AS NOTED				

ZENON Environmental Inc.
ZEI - OAKVILLE ONTARIO
Water for the World
CUSTOMER:
TITLE: ADMINISTRATION BLDG HVAV DETAILS
SIZE: D DRAWING NO. H-2 SHEET 1 OF 1 REV. A

ALWAYS THINK SAFETY

UNITED STATES
DEPARTMENT OF THE INTERIOR
BUREAU OF RECLAMATION
CENTRAL VALLEY PROJECT
WEST SAN JOAQUIN DIVISION - SAN LUIS UNIT - CALIFORNIA
DRAINAGE FEATURE
RE-EVALUATION FEASIBILITY STUDY
NORTHERLY AREA AND WESTLANDS WATER DISTRICT
SELENIUM BIOTREATMENT PLANT

RECEIVED Paul S. Schlein 5-11-2007

DENVER, COLORADO SEPTEMBER 8, 2008 805-D-10478

K

PACKAGED AIR CONDITIONING SCHEDULE

SYM	AREA SERVED	NOMINAL TONS	SUPPLY FAN				COOLING REQUIRED AT 95° OSA, 80° EDB, 62° EWB		2 STAGE GAS HEATING		ELECTRICAL			REFRIGERANT	MAX SOUND RATING (PER ARI STD. 270 & 370)	OSA CFM	MINIMUM EER/ SEER	OPERATING WEIGHT (LBS)	MANUFACTURER AND MODEL	REMARKS
			CFM	ESP	BRAKE HP	DRIVE	TOTAL MBH	SENSIBLE MBH	INPUT MBH	OUTPUT MBH	MCA	MOCP	V/ø	TYPE/LB-OZ						
AC 1	--	--	--	--	--	BELT	--	--	-- / --	-- / --	--	--	--	R22/ #-#	?	--	--	--	CARRIER 48HJ--- HIGH EFFICIENCY	1 2 ? ?

1. APPROVED ALTERNATE MANUFACTURERS: BRYANT, TRANE, AAON, LUXAIRE, AND YORK
2. PROVIDE UNIT WITH CARRIER SEVEN-DAY PROGRAMMABLE AUTO-CHANGEOVER 2 STAGE THERMOSTAT MODEL 33CS250-01.
3. PROVIDE UNIT WITH MANUFACTURER'S ROOF CURB, MASON WELDED ISOLATION RAILS (SEE DETAIL FOR SEISMIC RESTRAINTS), FLUE EXTENDER, HINGED ACCESS PANELS, GEAR DRIVEN INTEGRATED DRY BULB ECONOMIZER, MODULATING POWER EXHAUST WITH VARIABLE SPEED MOTOR CONTROLLER (100% RELIEF) AND WIRING HARNESS, PRESSURE SENSOR SET TO .02 POSITIVE PRESSURE.
4. PROVIDE UNIT WITH HIGH-STATIC MOTOR.
5. MAXIMUM "A-WEIGHTED" SUPPLY AIR SOUND RATINGS FOR UNITS 3-18 TONS = 95 DB @ 125 HZ, 90 DB @ 250 HZ.

EXHAUST FAN SCHEDULE

SYM	TYPE	AREA SERVED	BLOWER				ELECTRICAL		MAXIMUM SONES	OPERATING WEIGHT (LBS)	MANUFACTURER AND MODEL	REMARKS
			CFM	ESP	MAXIMUM RPM	DRIVE	HP/W	V/ø				
EF 1	CEILING CABINET	RESTROOM	100	.25	1200	DIRECT	.009/49	120/1	1.5	22	COOK MODEL GC-240	1 2 4
EF 2	CEILING CABINET	SHOWER AREA	100	.25	1200	DIRECT	.009/49	120/1	1.5	22	COOK MODEL GC-240	1 2 3
EF 3	CEILING CABINET	JANITOR	100	.25	1200	DIRECT	.009/49	120/1	1.5	22	COOK MODEL GC-240	1 2 3
EF 4	CEILING CABINET	BREAKROOM	100	.25	1200	DIRECT	.009/49	120/1	1.5	22	COOK MODEL GC-240	1 2 3

1. APPROVED ALTERNATE MANUFACTURER'S: COOK, GREENHECK, PENN, CARNES, JENCO FAN, & BARRY BLOWER.
2. PROVIDE UNIT WITH MANUFACTURER'S ALUMINUM ROOF CAP (FLAT ROOF) EQUAL TO COOK MODEL PR (W/ INTEGRAL BIRD SCREEN AND ROOF CURB), MANUFACTURER'S STEEL ROOF JACK (SLOPED ROOF) EQUAL TO COOK MODEL RJ (W/ INTEGRAL BIRD SCREEN, FLASHING FLANGE AND BLACK EPOXY FINISH), MANUFACTURER'S WALL CAP EQUAL TO COOK MODEL WCG (W/ INTEGRAL BIRDSCREEN), BACKDRAFT DAMPER, OUTLET FLEX DUCT CONNECTION, STANDARD DISCONNECT SWITCH, HANGING VIBRATION ISOLATORS, AND WHITE ALUMINUM GRILLE. (NOTE THAT ONLY ONE ROOF CAP IS REQUIRED FOR ALL FANS.)
3. CONTROL FAN BY WALL SWITCH.
4. CONTROL FAN WITH HEAT RISE T-STAT AND OVER-RIDE ON/OFF SWITCH.

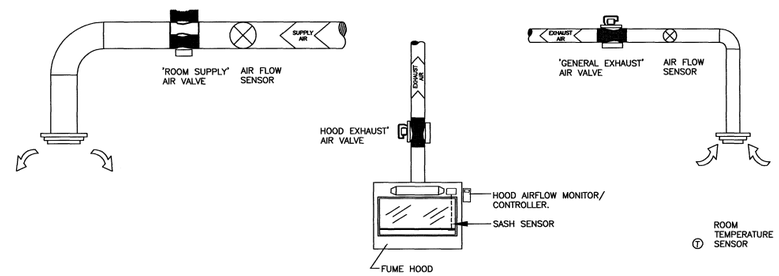

Lab Area Ventilation Control Schematic

ROOM AIR BALANCE SCHEDULE

ROOM	NUMBER OF HOODS IN ROOM	ROOM VOLUME (CU. FT.)	MINIMUM AIR CHANGES (# PER HR.)	MINIMUM TOTAL EXHAUST (CFM)	ROOM VAV SUPPLY			ROOM EXHAUST			MINIMUM ROOM PRESSURIZATION (NEG. CFM)
					HEATING (CFM)	COOLING (CFM)	MAX (CFM)	MAX HOOD EXHAUST (CFM)	MIN HOOD FACE VEL. (FPM)	MAX GENERAL EXHAUST (CFM)	
LAB AREA	1	--	--	--	--	--	--	--	--	--	--

THIS DOCUMENT EMBODIES DESIGNS AND INFORMATION PROPRIETARY TO ZENON ENVIRONMENTAL INC. IT IS TO BE USED ONLY FOR THE PURPOSE AND BY THE ENTITY FOR WHICH IT WAS ORIGINALLY SUPPLIED. THE DOCUMENT MAY NOT BE DUPLICATED, DISCLOSED TO ANY OTHER PERSON OR ENTITY, OR USED FOR MANUFACTURE OF THE ITEM IN PART OR IN WHOLE WITHOUT THE PRIOR WRITTEN PERMISSION OF ZENON ENVIRONMENTAL INC.

REV.	DATE	DESCRIPTION	ZONE	DSGN	APPD

APPROVAL		DATE (Y/M/D)
DRWN:	JH	
DSGN:	HF	
CHKD:	TP	
APPD:		
CADD FILE:	2001090002.DGN	
SCALE:	AS NOTED	

ZENON Environmental Inc.
ZEI – OAKVILLE ONTARIO
Water for the World

CUSTOMER:

TITLE: ADMINISTRATION BLDG HVAC DETAILS

SIZE: D DRAWING NO. H-3 SHEET 1 OF 1 REV. A

ALWAYS THINK SAFETY

UNITED STATES
DEPARTMENT OF THE INTERIOR
BUREAU OF RECLAMATION
CENTRAL VALLEY PROJECT
WEST SAN JOAQUIN DIVISION – SAN LUIS UNIT – CALIFORNIA

DRAINAGE FEATURE
RE-EVALUATION FEASIBILITY STUDY
NORTHERLY AREA AND WESTLANDS WATER DISTRICT
SELENIUM BIOTREATMENT PLANT

RECEIVED Ronald A. Schlein 5-11-2007

DENVER, COLORADO SEPTEMBER 8, 2006 805-D-10479

D (24x36)

PACKAGED AIR CONDITIONING SCHEDULE

SYM	AREA SERVED	NOMINAL TONS	SUPPLY FAN				COOLING REQUIRED AT 95° OSA, 80° EDB, 62° EWB		2 STAGE GAS HEATING		ELECTRICAL			REFRIGERANT	MAX SOUND RATING (PER ARI STD. 270 & 370)	OSA CFM	MINIMUM EER/ SEER	OPERATING WEIGHT (LBS)	MANUFACTURER AND MODEL	REMARKS
			CFM	ESP	BRAKE HP	DRIVE	TOTAL MBH	SENSIBLE MBH	INPUT MBH	OUTPUT MBH	MCA	MOCP	V/ø	TYPE/LB-OZ						
AC 1	--	--	--	--	--	BELT	--	--	-- / --	-- / --	--	--	--	R22/ #-#	?	--	--	--	CARRIER 48HJ--- HIGH EFFICIENCY	1 2 ? ?

1. APPROVED ALTERNATE MANUFACTURERS: BRYANT, TRANE, AAON, LUXAIRE, AND YORK
2. PROVIDE UNIT WITH CARRIER SEVEN-DAY PROGRAMMABLE AUTO-CHANGEOVER 2 STAGE THERMOSTAT MODEL 33CS250-01.
3. PROVIDE UNIT WITH MANUFACTURER'S ROOF CURB (SEE DETAIL FOR SEISMIC RESTRAINTS), LOW AMBIENT CONTROLS (TO 0°F), FLUE EXTENDER, HINGED ACCESS PANELS AND 0-25% OSA INTAKE HOOD.
4. PROVIDE UNIT WITH MANUFACTURER'S ROOF CURB (SEE DETAIL FOR SEISMIC RESTRAINTS), LOW AMBIENT CONTROLS (TO 0°F), FLUE EXTENDER, HINGED ACCESS PANELS AND 0-50% MOTORIZED OSA DAMPER, BAROMETRIC RELIEF DAMPER.
5. PROVIDE UNIT WITH MANUFACTURER'S ROOF CURB, MASON WELDED ISOLATION RAILS (SEE DETAIL FOR SEISMIC RESTRAINTS), FLUE EXTENDER, HINGED ACCESS PANELS, GEAR DRIVEN INTEGRATED DRY BULB ECONOMIZER, BAROMETRIC RELIEF DAMPER OR CENTRIFUGAL POWER EXHAUST (100% RELIEF) WITH WIRING HARNESS
6. PROVIDE UNIT WITH MANUFACTURER'S ROOF CURB, MASON WELDED ISOLATION RAILS (SEE DETAIL FOR SEISMIC RESTRAINTS), FLUE EXTENDER, HINGED ACCESS PANELS, GEAR DRIVEN INTEGRATED DRY BULB ECONOMIZER, MODULATING POWER EXHAUST WITH VARIABLE SPEED MOTOR CONTROLLER (100% RELIEF) AND WIRING HARNESS, PRESSURE SENSOR SET TO .02 POSITIVE PRESSURE.
7. PROVIDE UNIT WITH CARRIER WALL MOUNTED CO2 SENSOR MODEL 33ZCSENCO2.
8. PROVIDE UNIT WITH CARRIER DUCT MOUNTED CO2 SENSOR MODEL 33ZCASPCO2.
9. PROVIDE UNIT WITH HIGH-STATIC MOTOR.
10. PROVIDE MANUFACTURER'S 24-INCH HIGH ROOF CURB AS REQUIRED FOR BUILT-UP ROOF SYSTEMS.
11. MAXIMUM "A-WEIGHTED" SUPPLY AIR SOUND RATINGS FOR UNITS 3-18 TONS = 95 DB @ 125 HZ, 90 DB @ 250 HZ.
12. MAXIMUM "A-WEIGHTED" SUPPLY AIR SOUND RATINGS FOR UNITS 20 TONS OR LARGER = 99 DB @ 125 HZ, 93 DB @ 250 HZ.

EXHAUST FAN SCHEDULE

SYM	TYPE	AREA SERVED	BLOWER				ELECTRICAL		MAXIMUM SONES	OPERATING WEIGHT (LBS)	MANUFACTURER AND MODEL	REMARKS
			CFM	ESP	MAXIMUM RPM	DRIVE	HP/W	V/ø				
EF 1	CEILING CABINET	RESTROOM	100	.25	1200	DIRECT	.009/49	120/1	1.5	22	COOK MODEL GC-240	1 2 4
EF 2	CEILING CABINET	SHOWER AREA	100	.25	1200	DIRECT	.009/49	120/1	1.5	22	COOK MODEL GC-240	1 2 3
EF 3	CEILING CABINET	JANITOR	100	.25	1200	DIRECT	.009/49	120/1	1.5	22	COOK MODEL GC-240	1 2 3
EF 4	CEILING CABINET	BREAKROOM	100	.25	1200	DIRECT	.009/49	120/1	1.5	22	COOK MODEL GC-240	1 2 3

1. APPROVED ALTERNATE MANUFACTURER'S: COOK, GREENHECK, PENN, CARNES, JENCO FAN, & BARRY BLOWER.
2. PROVIDE UNIT WITH MANUFACTURER'S ALUMINUM ROOF CAP (FLAT ROOF) EQUAL TO COOK MODEL PR (W/ INTEGRAL BIRD SCREEN AND ROOF CURB), MANUFACTURER'S STEEL ROOF JACK (SLOPED ROOF) EQUAL TO COOK MODEL RJ (W/ INTEGRAL BIRD SCREEN, FLASHING FLANGE AND BLACK EPOXY FINISH), MANUFACTURER'S WALL CAP EQUAL TO COOK MODEL WCG (W/ INTEGRAL BIRDSCREEN), BACKDRAFT DAMPER, OUTLET FLEX DUCT CONNECTION, STANDARD DISCONNECT SWITCH, HANGING VIBRATION ISOLATORS, AND WHITE ALUMINUM GRILLE. (NOTE THAT ONLY ONE ROOF CAP IS REQUIRED FOR ALL FANS.)
3. CONTROL FAN BY WALL SWITCH.
4. CONTROL FAN WITH HEAT RISE T-STAT AND OVER-RIDE ON/OFF SWITCH.

THIS DOCUMENT EMBODIES DESIGNS AND INFORMATION PROPRIETARY TO ZENON ENVIRONMENTAL INC. IT IS TO BE USED ONLY FOR THE PURPOSE AND BY THE ENTITY FOR WHICH IT WAS ORIGINALLY SUPPLIED. THE DOCUMENT MAY NOT BE DUPLICATED, DISCLOSED TO ANY OTHER PERSON OR ENTITY, OR USED FOR MANUFACTURE OF THE ITEM IN PART OR IN WHOLE WITHOUT THE PRIOR WRITTEN PERMISSION OF ZENON ENVIRONMENTAL INC.

REV.	DATE	DESCRIPTION	ZONE	DSGN	APPD

APPROVAL		DATE (Y/M/D)
DRWN:	JH	
DSGN:	HF	
CHKD:	TP	
APPD:		
CADD FILE:	2001090002.DGN	
SCALE:	AS SHOWN	

ZENON Environmental Inc.
ZEI - OAKVILLE ONTARIO
Water for the World

CUSTOMER:

TITLE: ADMINISTRATION BLDG HVAC DETAILS

SIZE: D | DRAWING NO. H-4 | SHEET 1 OF 1 | REV. A

ALWAYS THINK SAFETY

UNITED STATES
DEPARTMENT OF THE INTERIOR
BUREAU OF RECLAMATION
CENTRAL VALLEY PROJECT
WEST SAN JOAQUIN DIVISION - SAN LUIS UNIT - CALIFORNIA
DRAINAGE FEATURE
RE-EVALUATION FEASIBILITY STUDY
NORTHERLY AREA AND WESTLANDS WATER DISTRICT
SELENIUM BIOTREATMENT PLANT

RECEIVED Paul S. Sellers 5-11-2007
DENVER, COLORADO SEPTEMBER 8, 2006 805-D-10480

D (24x36)

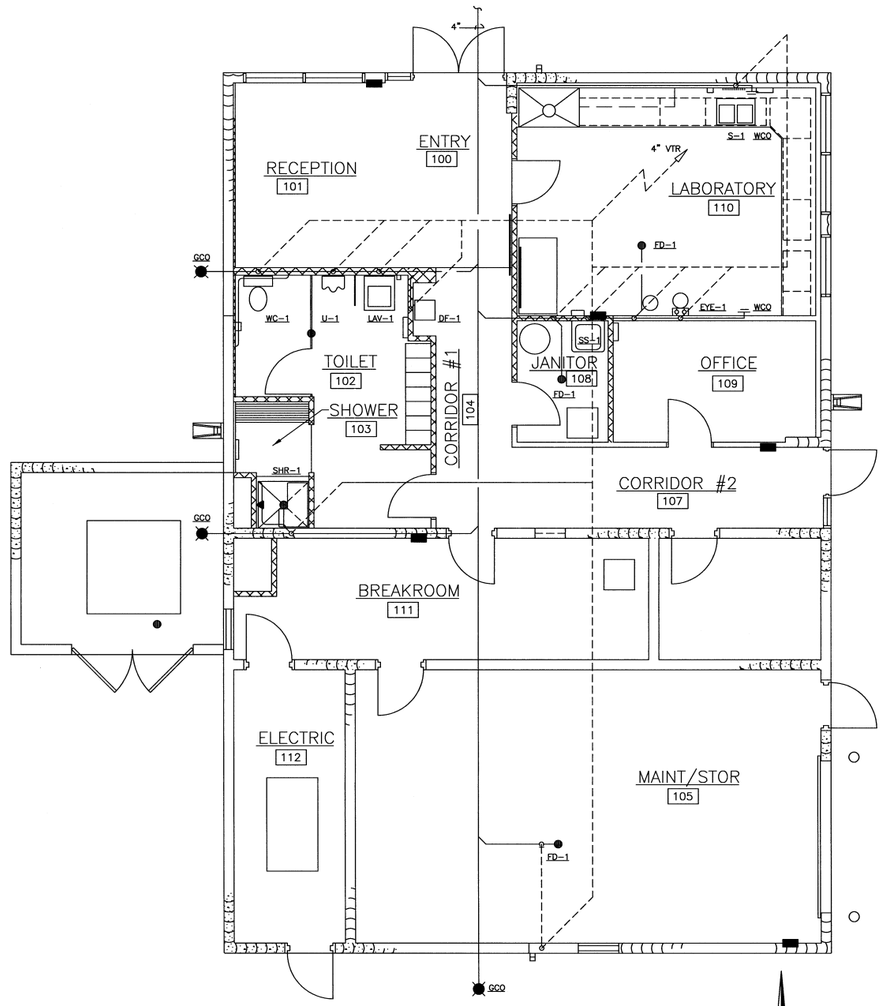

ADMINISTRATION BLDG
WASTE AND VENT PIPING PLAN

0 1' 4'

THIS DOCUMENT EMBODIES DESIGNS AND INFORMATION PROPRIETARY TO ZENON ENVIRONMENTAL INC. IT IS TO BE USED ONLY FOR THE PURPOSE AND BY THE ENTITY FOR WHICH IT WAS ORIGINALLY SUPPLIED. THE DOCUMENT MAY NOT BE DUPLICATED, DISCLOSED TO ANY OTHER PERSON OR ENTITY, OR USED FOR MANUFACTURE OF THE ITEM IN PART OR IN WHOLE WITHOUT THE PRIOR WRITTEN PERMISSION OF ZENON ENVIRONMENTAL INC.

REV.	DATE	DESCRIPTION	ZONE	DSGN	APPD

APPROVAL		DATE (Y/M/D)
DRWN:	JH	
DSGN:	HF	
CHKD:	TP	
APPD:		
CADD FILE:	2001090002.DGN	
SCALE:	AS NOTED	

ZENON Environmental Inc.
ZEI – OAKVILLE ONTARIO
Water for the World

CUSTOMER:

TITLE: ADMINISTRATION BLDG PLUMBING PLAN

SIZE: D | DRAWING NO. P-1 | SHEET 1 OF 1 | REV. A

ALWAYS THINK SAFETY

UNITED STATES
DEPARTMENT OF THE INTERIOR
BUREAU OF RECLAMATION
CENTRAL VALLEY PROJECT
WEST SAN JOAQUIN DIVISION – SAN LUIS UNIT – CALIFORNIA
DRAINAGE FEATURE
RE-EVALUATION FEASIBILITY STUDY
NORTHERLY AREA AND WESTLANDS WATER DISTRICT
SELENIUM BIOTREATMENT PLANT

RECEIVED

DENVER, COLORADO SEPTEMBER 11, 2006 | 805-D-10481

D (24x36)

K

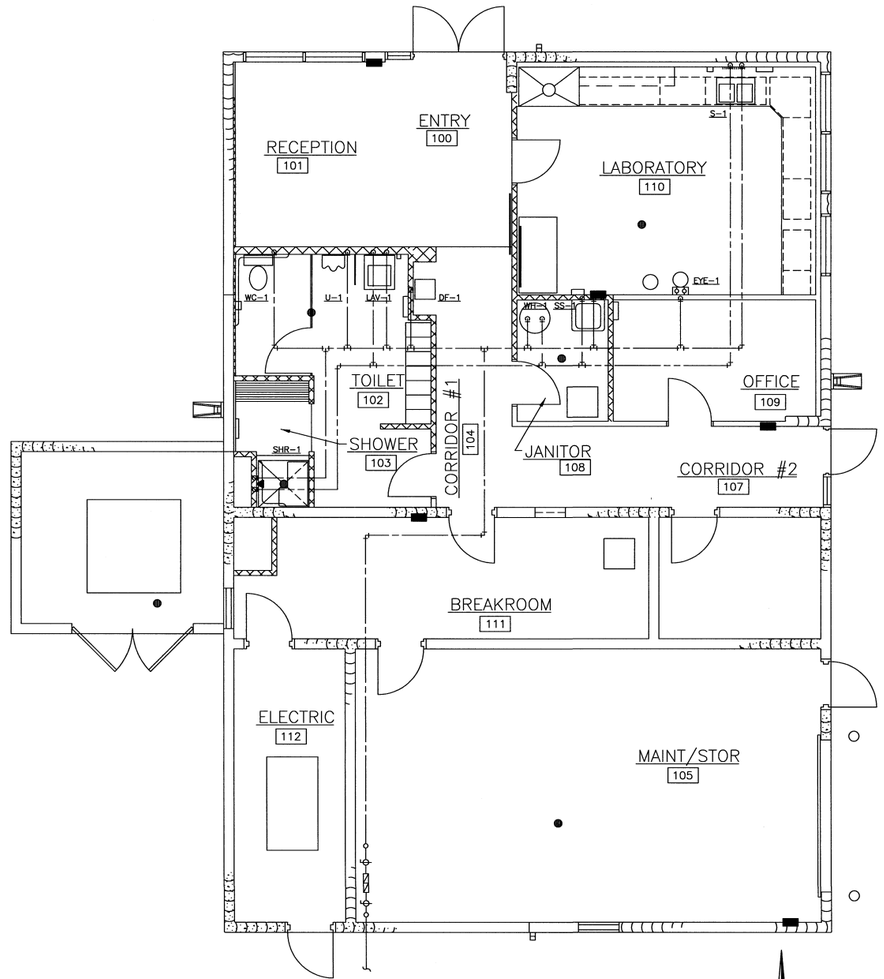

ADMINISTRATION BLDG
WATER AND GAS PIPING PLAN

0 1' 4'

THIS DOCUMENT EMBODIES DESIGNS AND INFORMATION PROPRIETARY TO ZENON ENVIRONMENTAL INC. IT IS TO BE USED ONLY FOR THE PURPOSE AND BY THE ENTITY FOR WHICH IT WAS ORIGINALLY SUPPLIED. THE DOCUMENT MAY NOT BE DUPLICATED, DISCLOSED TO ANY OTHER PERSON OR ENTITY, OR USED FOR MANUFACTURE OF THE ITEM IN PART OR IN WHOLE WITHOUT THE PRIOR WRITTEN PERMISSION OF ZENON ENVIRONMENTAL INC.

REV.	DATE	DESCRIPTION	ZONE	DSGN	APPD

APPROVAL		DATE (Y/M/D)
DRWN:	JH	
DSGN:	HF	
CHKD:	TP	
APPD:		
CADD FILE:	2001090002.DGN	
SCALE:	AS NOTED	

ZENON Environmental Inc.
Water for the World
ZEI – OAKVILLE ONTARIO

CUSTOMER:

TITLE: ADMINISTRATION BLDG PLUMBING PLAN

SIZE: D | DRAWING NO. P-2 | SHEET 1 OF 1 | REV. A

ALWAYS THINK SAFETY

UNITED STATES
DEPARTMENT OF THE INTERIOR
BUREAU OF RECLAMATION
CENTRAL VALLEY PROJECT
WEST SAN JOAQUIN DIVISION – SAN LUIS UNIT – CALIFORNIA

DRAINAGE FEATURE
RE-EVALUATION FEASIBILITY STUDY
NORTHERLY AREA AND WESTLANDS WATER DISTRICT
SELENIUM BIOTREATMENT PLANT

RECEIVED

DENVER, COLORADO SEPTEMBER 11, 2006 | 805-D-10482

D (24x36)

PLUMBING FIXTURE SCHEDULE

SYMBOL	FIXTURE / ADDITIONAL COMMENTS	CONNECTION SIZE (INCHES) WASTE	VENT	TRAP	CW	HW	MANUFACTURER / MODEL NUMBER / DESCRIPTION / ADDITIONAL COMMENTS
WC-1	WATER CLOSET (FLUSH TANK STYLE) (COMFORT HEIGHT / ADA)	3	2	INT.	1/2	--	KOHLER CIMARRON MODEL K-3496 (LEFT LEVER) / K-3496-RA (RIGHT LEVER), FLOOR MOUNTED, GRAVITY FLUSH TANK, WITH ELONGATED BOWL, KOHLER LUSTRA MODEL K-4650, ELONGATED OPEN FRONT SEAT, WITH CHECK HINGE, AND NO COVER. APPROVED ALTERNATES: TOTO-DALTON, MANSFIELD-MAVERICK, AMERICAN STANDARD-CHAMPION, ELJER-TITAN.
U-1	URINAL (ADA COMPLIANT)	2	1 1/2	INT.	3/4	--	KOHLER DEXTER MODEL K-5016-ET / WALL MOUNTED, WITH 3/4" TOP SPUD SLOAN REGAL XL MODEL 186-1 FLUSHOMETER JAY R SMITH FIGURE NUMBER 0637 ADJUSTABLE FIXTURE SUPPORT
LAV-1	LAVATORY (WALL MOUNTED) (ADA COMPLIANT)	1 1/2	1 1/2	1 1/4	1/2	1/2	KOHLER KINGSTON MODEL K-2005, VITREOUS CHINA, WALL MOUNTED, HOLES ON 4" CENTERS, DRAIN K-7715, KOHLER CORALAIS MODEL K-15598-5 / 5 3/4" LONG, SINGLE LEVER FAUCET, JAY R SMITH FIGURE NUMBER 0700 SUPPORT WITH CONCEALED ARMS, WATTS SERIES USG-B THERMOSTATIC MIXING VALVE, ASSE STANDARD 1016 LISTED, BRONZE BODY, INTEGRAL CHECK VALVES AND SELECTABLE TEMPERATURE RANGE FROM 80°F TO 120°F.
S-1	SINK - DOUBLE COMPARTMENT (13"X16"X6 1/2" - EACH) (ADA COMPLIANT)	2	1 1/2	1 1/2	1/2	1/2	ELKAY LUSTERSTONE MODEL LRAD-3322 / 6 1/2" DEEP, STAINLESS STEEL SINK, ELKAY HI-ARC MODEL LK-4123, SINGLE LEVER FAUCET, SWING SPOUT, AND HOSE SPRAY, ELKAY MODEL LK-35 / CHROME PLATED TAILPIECE AND STAINLESS STEEL BASKET
SS-1	SERVICE SINK (24"X24"X10") (FLOOR MOUNTED)	3	2	3	1/2	1/2	ACORN TERRAZZO-WARE MODEL TRH-242410, PROVIDE AND INSTALL WITH STAINLESS STEEL BUMPER GUARD, DRAIN GASKET, CHROME FAUCET, 36" HOSE AND WALL HANGER, MOP HANGER AND 2 SIDE WALL GUARD
EYE-1	EMERGENCY EYE WASH (WALL MOUNTED)	--	--	--	1/2	--	HAWS MODEL 8905 SERIES, WALL MOUNTED WITH DUAL 45° ANGLED HEADS AND RECOIL HOSE, PROVIDE WITH FLIP TOP DUST COVERS, AND UNIVERSAL EMERGENCY SIGN, HAWS MODEL SP212 / VACUUM BREAKER
DF-1	DRINKING FOUNTAIN (INTERIOR SINGLE BUBBLER) (WALL MOUNTED) (ADA COMPLIANT)	1 1/2	1 1/2	1 1/4	1/2	--	HAWS MODEL 1025G / WITH CHROME BUBBLER, PUSH BUTTON, AND STRAINER HAWS MODEL 6521 / MOUNTING PLATE AND WALL SUPPORT CARRIER
FD-1	FLOOR DRAIN (CONCRETE FLOOR)	2	1 1/2	2	--	--	JAY R SMITH FIGURE NUMBER 2005Y-P050-NB, NO-HUB OUTLET, 5" ø ROUND, AND NICKEL BRONZE FINISH, WITH ADJUSTABLE STRAINER AND TRAP PRIMER, INSTALL TOP OF DRAIN 1/8" BELOW FINISH FLOOR AND CAULK EDGE
WH-1	WATER HEATER	--	--	--	SEE PLANS	SEE PLANS	
ET-1	EXPANSION TANK	--	--	--	3/4	--	AMTROL THERM-X-TROL MODEL ST-____, NON-ASME SERIES THERMAL EXPANSION ABSORBER
DC-1	DOUBLE CHECK BACKFLOW PREVENTER	--	--	--	--	--	WATTS, SERIES 007 DOUBLE CHECK VALVE ASSEMBLY. MODEL NO. 007_____ REPLACEABLE SEATS AND SEAT DISCS, CAST BRONZE BODY CONSTRUCTION- 1/2" THRU 2", FUSED EPOXY COATED CAST IRON BODY- 2 1/2" AND 3" LOW PRESSURE DROP.
RPV-1	REDUCED PRESSURE BACKFLOW PREVENTER	--	--	--	--	--	WATTS, SERIES 009 REDUCED PRESSURE ZONE ASSEMBLY, MODEL NO. 009 - _____ WITH QUARTER TURN BALL VALVES, BRONZE STRAINER, AND AIR GAP. BRONZE BODY CONSTRUCTION- 1/2" THRU 2", EPOXY COATED CAST IRON BODY CONSTRUCTION - 2 1/2" AND 3".
SHR-1	SHOWER (INSERT STYLE) (ADA COMPLIANT)	2	1 1/2	2	1/2	1/2	KOHLER FREEWILL MODEL K-12100-P (LEFT SEAT) K-12101-P (RIGHT SEAT), KOHLER RITE TEMP MODEL K-304-K / PRESSURE BALANCING VALVE, KOHLER PERSONA MODEL K-9674 / HAND SHOWER KIT, KOHLER MODEL K-9132 / DRAIN
GCO	GRADE CLEANOUT (PAVED AREAS)	SEE PLANS	--	--	--	--	J.R. SMITH 4880 SERIES, ROUND FLANGED HOUSING WITH HEAVY DUTY CAST IRON COVER. FURNISH WITH BRONZE PLUG. COVER TO BE INSCRIBED "SAN".

NOTES:

1. ALL ADA COMPLIANT FIXTURES MUST COMPLY WITH ICC/ANSI A117.1. SEE ARCHITECTURAL PLANS FOR HANDICAPPED FIXTURE DESIGNATIONS, LOCATIONS, CLEARANCES, AND MOUNTING HEIGHTS.
2. ALL HW PIPING AND DRAIN LINES BENEATH ADA COMPLIANT LAVATORIES MUST BE INSULATED TO PREVENT BURNS. REF. ARCHITECTURAL PLANS. INSULATE WITH MOLDED CLOSED CELL VINYL INSULATION - TRUEBRO OR EQUAL.
3. PROVIDE P-TRAP PRIMERS FOR ALL FLOOR DRAINS (PPP INC., OR EQUAL).
4. SEE SPECIFICATIONS FOR ALTERNATE APPROVED MANUFACTURERS.
5. BACKFLOW PREVENTION: THIS BUILDING IS PROVIDED WITH BACKFLOW PREVENTION DEVICES ON THE MAIN WATER SERVICE AND THE FOLLOWING EQUIPMENT:
   --
   --
   --

   ADDITIONAL BACKFLOW PREVENTION MAY BE REQUIRED ON THE FOLLOWING EQUIPMENT, DEPENDING ON THE ACTUAL EQUIPMENT SUPPLIED AND ITS BACKFLOW POTENTIAL. CONTRACTOR SHALL REVIEW FINAL EQUIPMENT INSTALLATION WITH THE LOCAL WATER COMPANY AND PLUMBING INSPECTOR, THEN SUBMIT A COST PROPOSAL TO THE OWNER FOR ANY ADDITIONAL BACKFLOW PREVENTION REQUIRED:
   --
   --
   --

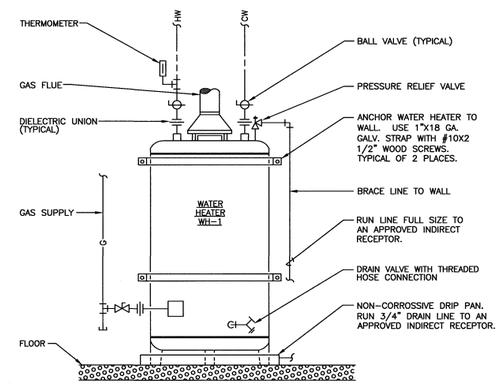

GAS WATER HEATER DETAIL

NOT TO SCALE

NOTES

1. TWO WAY CLEANOUT IS REQUIRED WHERE SEWER LINE EXITS THE BUILDING AND AT ANY OTHER LOCATIONS NOTED ON PLANS.
2. THE LOWER TWO CLEANOUTS ARE TO BE PROVIDED WHEN CLEANOUTS ARE LOCATED IN A PAVED CONCRETE OR ASPHALT AREA.

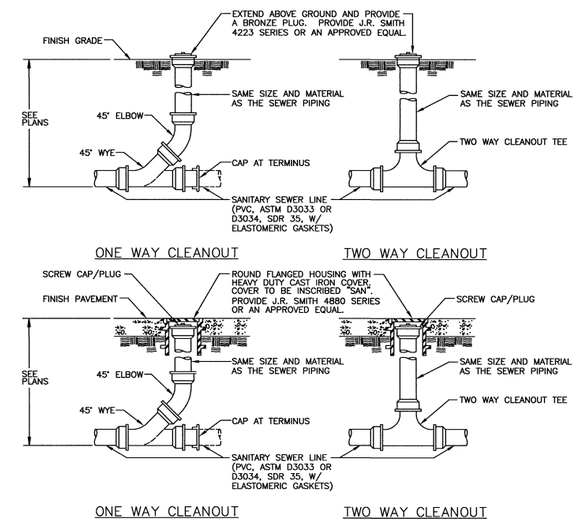

GRADE CLEANOUT (GCO) DETAIL

NOT TO SCALE

EQUIPMENT CONNECTION NOTES:

1. INSTALL FLEX CONNECTION AT ALL ROOF TOP UNITS WHICH HAVE SPRING ISOLATION CURBS. (36" MAX.)
2. INSTALL SOLID PIPE CONNECTION TO ALL ROOF TOP UNITS WHICH DO NOT HAVE SPRING ISOLATION CURBS.
3. PAINT PIPE WITH RUSTOLEUM #866 PRO-GUARD PRIMER, RED OR GRAY, OR APPROVED EQUAL.

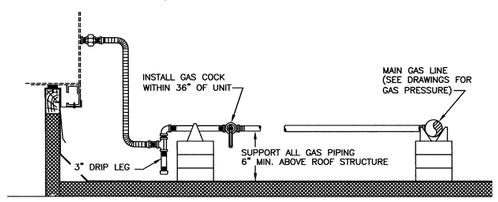

APPROVED PIPE SUPPORT SYSTEMS:

MIRO MODEL 1.5 WITH SPACERS.
MIRO INDUSTRIES 1-800-768-6978

ADVANCED SUPPORT PRODUCTS
ASP, INC. 1-800-941-5737

VERSABLOCK BY FREEDOM INC., VERSABLOCK.COM
1-866-612-5625 OR 1-208-861-0229

PIPE SUPPORTS SHALL BE AS FOLLOWS:

SIZE OF PIPE	SUPPORT REQUIRED
1/2"	6' O.C.
3/4" - 1"	8' O.C.
1 1/4" OR LARGER	10' O.C.

ROOFTOP UNIT - GAS PIPING DETAIL

NOT TO SCALE

REV.	DATE	DESCRIPTION	ZONE	DSGN	APPD

APPROVAL		DATE (Y/M/D)
DRWN:	JH	
DSGN:	HF	
CHKD:	TP	
APPD:		
CADD FILE:	2001090002.DGN	
SCALE:	AS NOTED	

ZENON Environmental Inc.
ZEI - OAKVILLE ONTARIO
Water for the World

CUSTOMER:

TITLE: ADMINISTRATION BLDG PLUMBING DETAILS

SIZE: D | DRAWING NO. P-3 | SHEET 1 OF 1 | REV. A

ALWAYS THINK SAFETY

UNITED STATES
DEPARTMENT OF THE INTERIOR
BUREAU OF RECLAMATION
CENTRAL VALLEY PROJECT
WEST SAN JOAQUIN DIVISION - SAN LUIS UNIT - CALIFORNIA

DRAINAGE FEATURE
RE-EVALUATION FEASIBILITY STUDY
NORTHERLY AREA AND WESTLANDS WATER DISTRICT
SELENIUM BIOTREATMENT PLANT

RECEIVED

DENVER, COLORADO SEPTEMBER 11, 2008 | 805-D-10483

THIS DOCUMENT EMBODIES DESIGNS AND INFORMATION PROPRIETARY TO ZENON ENVIRONMENTAL INC. IT IS TO BE USED ONLY FOR THE PURPOSE AND BY THE ENTITY FOR WHICH IT WAS ORIGINALLY SUPPLIED. THE DOCUMENT MAY NOT BE DUPLICATED, DISCLOSED TO ANY OTHER PERSON OR ENTITY, OR USED FOR MANUFACTURE OF THE ITEM IN PART OR IN WHOLE WITHOUT THE PRIOR WRITTEN PERMISSION OF ZENON ENVIRONMENTAL INC.

D (24x36)

VALVE SYMBOLS

NORMALLY CLOSED	NORMALLY OPEN	
		DIAPHRAGM VALVE
		BUTTERFLY VALVE
		BALL VALVE
		GATE VALVE
		GLOBE VALVE
		PLUG VALVE
		NEEDLE VALVE

CHECK VALVE CV-

INJECTION QUILL IQ-

SOLENOID VALVE SV-

THREE WAY VALVE SV-

FOUR WAY VALVE SV-

DAMPER

RUPTURE DISC (PRESSURE) PSE-

RUPTURE DISC (VACUUM) PSE-

VACUUM BREAKER VB-

PRESSURE RELIEF VALVE PSV-

AUTOMATIC AIR VENT AV-

PRESSURE REGULATOR PRV-

BACK PRESSURE VALVE BPV-

FLOAT CONTROLLED VALVE LCV-

SLIDING GATE VALVE SGV-

VALVE ACTUATORS

CONTROL VALVE

DOUBLEACTING (INST. AIR LINES NOT ALWAYS SHOWN)

FC SPRING CLOSE (INST. AIR LINES & FAIL CLOSE INDICATION NOT ALWAYS SHOWN)

FO SPRING OPEN (INST. AIR LINES & FAIL OPEN INDICATION NOT ALWAYS SHOWN)

ACTUATOR C/W TRAVEL STOP

ACTUATOR C/W HAND OVERRIDE

CONTROL VALVE C/W I/P, ELECTRIC ANALOG TO PNEUMATIC SIGNAL CONVERTER

SOLENOID VALVE

ELECTRIC/MOTORIZED (DIGITAL - OPEN/CLOSED))

ELECTRIC/MOTORIZED (ANALOG - CONTROL)

EQUIPMENT SYMBOLS

CENTRIFUGAL PUMP P-

CENTRIFUGAL BLOWER B-

DIAPHRAGM PUMP P-

LOBE BLOWER B-

METERING PUMP P-

COMPRESSOR

ENERGY RECOVERY TURBINE ERT-

AIR DRYER

POSITIVE DISPLACEMENT PUMP P-

PORTABLE EXCHANGE TANK

GRANULAR ACTIVATED CARBON FILTER (GAC) OR MULTI MEDIA FILTER (MMF)

WATER SOFTENER

MEMBRANE MODULES & HOUSING (IF REQ'D)

UV STERILIZER UV-

CARTRIDGE FILTER F-

SILENCER FILTER

HEAT EXCHANGER HE-

HEATER H-

HEATING (COOLING) COIL HC-

FE PADDLEWHEEL FLOWMETER

FE MAG MAGNETIC FLOWMETER

FE VORTEX VORTEX

FOI POSITIVE-DISPLACEMENT-TYPE FLOW TOTALIZING INDICATOR

FE FLUME

FLOW STRAIGHTENING DEVICE FX-

ORIFICE PLATE & FLANGE FO

ROTAMETER (VARIABLE AREA FLOWMETERS)

CALIBRATION COLUMN

STATIC MIXER SM-

PULSATION DAMPENER PD-

DIAPHRAGM SEAL

MUFFLER

EDUCTOR E-

AGITATOR MX-

VENT AND FILTER

INSTRUMENT IDENTIFICATION

MEASURED OR INITIATING VARIABLE \ DEVICE	PRIMARY ELEMENT	TRANSMITTER	INDICATING TRANSMITTER	INDICATOR	RECORDER	CONTROLLER (NOTE 2)	INDICATING CONTROLLER (NOTE 2)	RECORDING CONTROLLER	SWITCH (NOTE 2)	INDICATING SWITCH (NOTE 2)	TRANSDUCER, RELAY, TRIGGER, COMPUTATION	ALARM (NOTE 2)	GLASS, VIEWING DEVICE	PILOT LIGHT (NOTE 2)
ANALYSIS (NOTE 1)	AE	AT	AIT	AI	AR	AC	AIC	ARC	AS	AIS	AY	AA		AL
ANALYSIS RATIO				AFI	AFR	AFC	AFIC	AFRC			AFY	AFA		AFL
ANALYSIS SCAN	AJE	AJT	AJIT	AJI	AJR	AJC	AGIC	AJRC	AJS	AJIS	AJY	AJA		
ANALYSIS INSTANTANEOUS (MOMENTARY)	AME					AMC			AMS		AMY	AMA		
CONDUCTIVITY/RESISTIVITY	CE	CT	CIT	CI	CR	CC	CIC	CRC	CS	CIS	CY	CA		CL
CONDUCTIVITY RATIO				CFI	CFR	CFC	CFIC	CFRC			CFY	CFA		CFL
VOLTAGE				EI	ER	EC	EIC		ES	EIS	EY	EA		EL
FLOW RATE	FE	FT	FIT	FI	FR	FC	FIC	FRC	FS	FIS	FY	FA	FG	FL
FLOW RATIO				FFI	FFR	FFC	FFIC	FFRC			FFY	FFA		FFL
FLOW QUANTITY				FQI					FQS	FQIS		FQA		FQL
HAND (MANUAL)						HC	HIC		HS	HIS	HY			
CURRENT		IT		II	IR				IS	HS	IY	IA		IL
POWER				JI	JR				JS	JIS	JY	JA		JL
TIME				KI		KC			KS	KIS	KY	KA		KL
TIME QUANTITY				KQI					KQS	KQIS		KQA		KQL
LEVEL	LE	LT	LIT	LI	LR	LC	LIC	LRC	LS	LIS	LY	LA	LG	LL
MOTOR (ELECTRICAL)				MI								MA		ML
PRESSURE/VACUUM	PE	PT	PIT	PI	PR	PC	PIC	PRC	PS	PIS	PY	PA		PL
PRESSURE DIFFERENTIAL	PDE	PDT	PDIT	PDI	PDR	PDC	PDIC	PDRC	PDS	PDIS	PDY	PDA		PDL
RADIATION	RE	RT	RIT	RI	RR	RC	RIC	RRC	RS	RIS	RY	RA		RL
SPEED/FREQUENCY	SE	ST	SIT	SI	SR	SC	SIC	SRC	SS	SIS	SY	SA		SL
RATE OF SPEED CHANGE				SKI		SKC					SKY			
TEMPERATURE	TE	TT	TIT	TI	TR	TC	TIC	TRC	TS	TIS	TY	TA		TL
TEMPERATURE DIFFERENTIAL	TDE	TDT	TDIT	TDI	TDR	TDC	TDIC	TDRC	TDS	TDIS	TDY	TDY		TDL
VIBRATION	VE	VT	VIT	VI	VR				VS	VIS	VY	VA		VL
MULTIVARIABLE	UE	UT	UIT	UI	UR				US	UIS	UY	UA		UL
POSITION				ZI		ZC	ZIC		ZS	ZIS	ZY	ZA		ZL
EVENT/STATUS									YS			YA		YL

NOTES:

1. THE DESCRIPTION OF AN ANALYTICAL VARIABLE FUNCTION (pH, SiO_2, O_3, ETC.) SHALL BE SHOWN OUTSIDE THE INSTRUMENT. EXAMPLE: ASL pH
2. ADD THE SUFFIX L (LOW), LL (LOW-LOW) H (HIGH), HH (HIGH-HIGH), HL (HIGH-LOW), AS REQUIRED. EXAMPLE: PSL FAL

LINE SYMBOLS & MISC.

FLOW INFORMATION

EX. 100 USGPM

P & ID TIE - INS

EX. PERMEATE XXXXXX-D-XXX TO STORAGE TANK TK-XX XX USGPM

TERMINATION TAG

MAIN PROCESS LINE

PROCESS LINE

EQUIPMENT/LINE SUPPLIED BY OTHERS

SKID BOUNDARY

FUTURE EQUIPMENT

ITEMS ON HOLD

OPTIONAL ITEM

INSTRUMENTATION LINES

I/P CONVERTER

MECHANICAL LINK

ULTRASONIC/ELECTROMAGNETIC

INSTRUMENT CONNECTION

DIGITAL SIGNAL

ANALOG SIGNAL (EX. 4-20 mA)

PNEUMATIC SIGNAL

SOFTWARE LINK

HYDRAULIC SIGNAL

CAPILLARY TUBING

CALCULATED VALUE

PIPING SPOOL TAG

REVISION TRIANGLE

CONTINUATION SYMBOL

RESIN TRAP RT

CONICAL STRAINER STR

Y STRAINER STR

STEAM TRAP ST

WEDGE WIRE STRAINER STR

FLOOR DRAIN

FLEXIBLE HOSE

THERMOWELL

FI PIG TAIL

CAMLOCK CONNECTION

NON-FLEX CONNECTION

COMMON ABBREVIATIONS

EQUIPMENT		VALVE		MISCELLANEOUS	
FG	FLOW SIGHT GLASS	CV	CHECK VALVE	FC	FAIL CLOSED
LG	LEVEL SIGHT GLASS	FV	AUTOMATIC VALVE	FO	FAIL OPEN
M	MOTOR	FCV	AUTOMATIC CONTROL VALVE	I/P	ELECTRIC ANALOG TO PNEUMATIC SIGNAL CONVERTER
SG	SIGHT GLASS	LCV	LEVEL CONTROL VALVE		
TK	TANK	TCV	TEMPERATURE CONTROL VALVE	IAS	INSTRUMENT AIR SUPPLY
		BPV	BACK PRESSURE VALVE	SP	SET POINT
		HCV	HAND CONTROL VALVE	NC	NORMALLY CLOSED
		HV	HAND VALVE	NO	NORMALLY OPEN
		SV	SAMPLE VALVE		
		YY	SOLENOID FOR PNEUMATIC CONTROL OF AUTOMATIC VALVE	MCC	MOTOR CONTROL CENTER
		MFV	MULTI FUNCTION VALVE (COMBINATION RELIEF & BACK PRESSURE VALVE FOR METERING PUMPS)	MAG	MAGNETIC

GENERAL INSTRUMENT OR CONTROL SYMBOLS

	LOCATED ON SKID CONTROL PANEL	FIELD MOUNTED	AUXILIARY LOCATION NORMALLY ACCESSIBLE TO OPERATOR
DISCRETE INSTRUMENTS			
MAN MACHINE INTERFACE MMI			
COMPUTER/DCS FUNCTION			
PROGRAMMABLE LOGIC CONTROL			

LA 1234 PLC ALARM FUNCTION WITH MULTIPLE TRIGGER POINTS SEE INSTRUMENT LETTERS

INSTRUMENTS SHARING COMMON HOUSING

PILOT LIGHT

UNDEFINED INTERLOCK LOGIC

PLC-X SYSTEMS WITH MULTIPLE PLC'S

COLOR COLOR MMI

CLIENT INTERFACE SIGNALS

OTHER COMBINATIONS OF ANALOG/DIGITAL & DATA HIGHWAY COMMUNICATION MUST ALSO BE SHOWN AS REQUIRED

FROM CLIENT TANK LEVEL (TAGxxx) ISOLATED 4-20 mA SIGNAL

DH+/DH485 TO CLIENT

DRY CONTACT FOR CLIENT ON HIGH LEVEL LAH-XXX

CLIENT SUPPLIED DRY CONTACT ON HIGH LEVEL LAH-XXX

JSL 0001 JAL 0001 UNINTERRUPTED POWER SUPPLY

MAIN POWER UPS TO ZENON CONTROLS/EQUIPMENT

HSK 0002 TAK 0002 SYSTEM STOP

REMOTE PC PRR 0001 PRINTER PRINTER

UA 0005 REMOTE DIALOUT REMOTE DIALOUT/GENERAL ALARM

UA 0005 REMOTE PC REMOTE PC

REMOTE PC

LINE DESIGNATION

(SIZE, SCHEDULE, MATERIAL)

SIZE (x"), SCHEDULE, MATERIAL

EX. 4", SCH.80, PVC

MOST COMMON ZENON MATERIAL'S

SCH.80, PVC
SCH.80, CPVC
SCH.10, 316L SS
SCH.40, 316L SS
SCH.10, 304L SS
SCH.40, 304L SS
SCH.40, C.S.
P.E. TUBING
SS TUBING

REV.	DATE	DESCRIPTION	ZONE	DSGN	APPD
A	8/18/05	PRELIMINARY - NOT FOR CONSTRUCTION		HFF	

APPROVAL		DATE (Y/M/D)
DRWN:	HFF	12/23/05
DSGN:	HFF	12/23/05
CHKD:		
APPD:		
CADD FILE:	FIG-1-PFD.DWG	
SCALE:	AS NOTED	

ZENON Environmental Inc.

Water for the World

CUSTOMER:

TITLE: NETWORK DRAWING LEGEND

SIZE: D DRAWING NO. I-0 SHEET 1 OF 1 REV. A

ALWAYS THINK SAFETY

UNITED STATES
DEPARTMENT OF THE INTERIOR
BUREAU OF RECLAMATION
CENTRAL VALLEY PROJECT
WEST SAN JOAQUIN DIVISION - SAN LUIS UNIT - CALIFORNIA

DRAINAGE FEATURE
RE-EVALUATION FEASIBILITY STUDY
NORTHERLY AREA AND WESTLANDS WATER DISTRICT
SELENIUM BIOTREATMENT PLANT

RECEIVED John L. Wolp
DENVER, COLORADO SEPTEMBER 8, 2006

805-D-10484

THIS DOCUMENT EMBODIES DESIGNS AND INFORMATION PROPRIETARY TO ZENON ENVIRONMENTAL INC. IT IS TO BE USED ONLY FOR THE PURPOSE AND BY THE ENTITY FOR WHICH IT WAS ORIGINALLY SUPPLIED. THE DOCUMENT MAY NOT BE DUPLICATED, DISCLOSED TO ANY OTHER PERSON OR ENTITY, OR USED FOR MANUFACTURE OF THE ITEM IN PART OR IN WHOLE WITHOUT THE PRIOR WRITTEN PERMISSION OF ZENON ENVIRONMENTAL INC.

D (24x36)

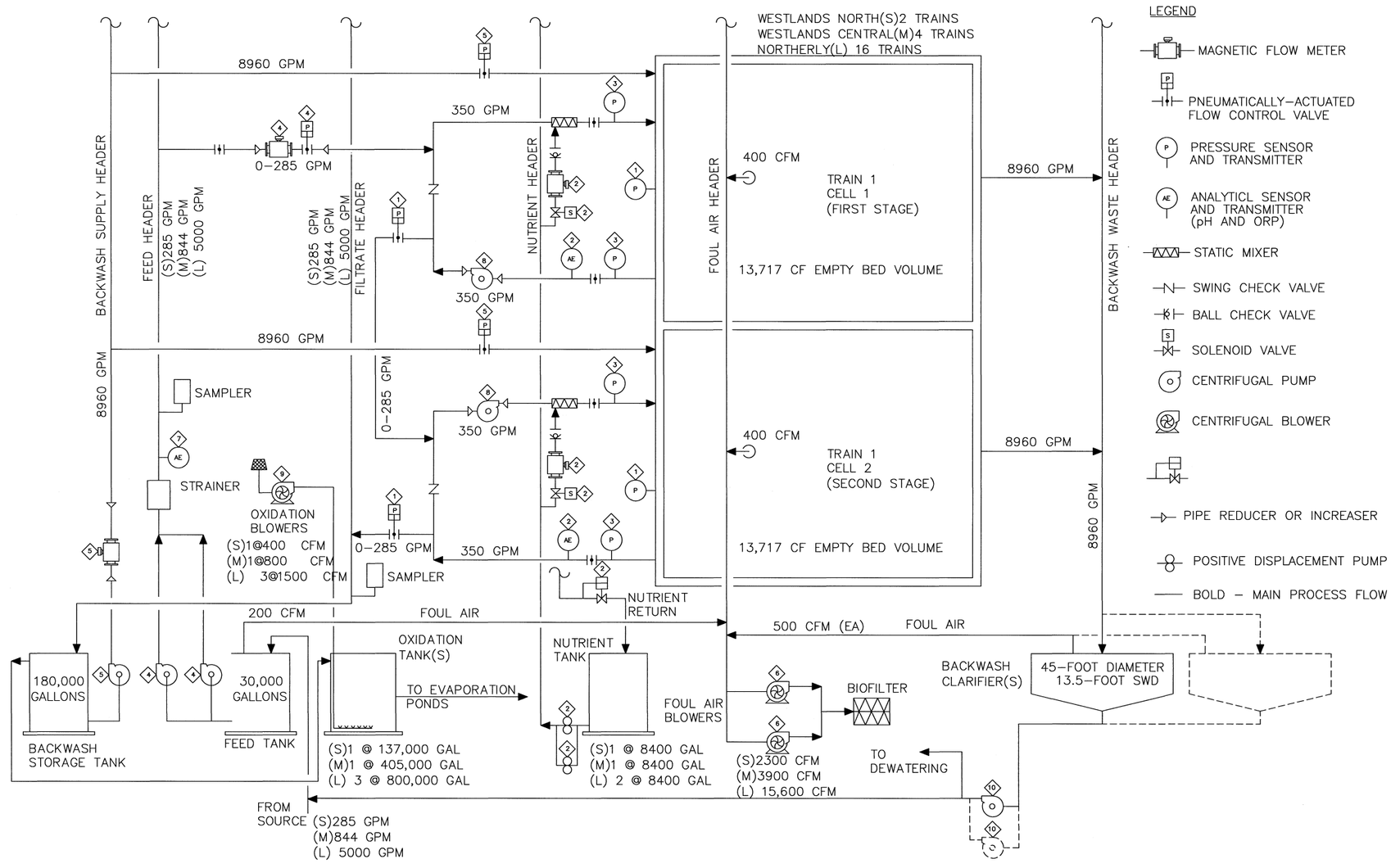

May 09, 2007-1:28 PM

THIS DOCUMENT EMBODIES DESIGNS AND INFORMATION PROPRIETARY TO ZENON ENVIRONMENTAL INC. IT IS TO BE USED ONLY FOR THE PURPOSE AND BY THE ENTITY FOR WHICH IT WAS ORIGINALLY SUPPLIED. THE DOCUMENT MAY NOT BE DUPLICATED, DISCLOSED TO ANY OTHER PERSON OR ENTITY, OR USED FOR MANUFACTURE OF THE ITEM IN PART OR IN WHOLE WITHOUT THE PRIOR WRITTEN PERMISSION OF ZENON ENVIRONMENTAL INC.

REV.	DATE	DESCRIPTION	ZONE	DSGN	APPD
A	8/18/05	PRELIMINARY – NOT FOR CONSTRUCTION		HFF	

APPROVAL		DATE (Y/M/D)
DRWN:	HFF	12/23/05
DSGN:	HFF	12/23/05
CHKD:		
APPD:		
CADD FILE:	FIG-1-PFD.DWG	
SCALE:	AS NOTED	

ZENON Environmental Inc.
Water for the World

CUSTOMER:

TITLE: PROCESS FLOW DIAGRAM

SIZE: D | DRAWING NO. I-1 | SHEET 1 OF 1 | REV. A

ALWAYS THINK SAFETY

UNITED STATES
DEPARTMENT OF THE INTERIOR
BUREAU OF RECLAMATION
CENTRAL VALLEY PROJECT
WEST SAN JOAQUIN DIVISION – SAN LUIS UNIT – CALIFORNIA

DRAINAGE FEATURE
RE–EVALUATION FEASIBILITY STUDY
NORTHERLY AREA AND WESTLANDS WATER DISTRICT
SELENIUM BIOTREATMENT PLANT

RECEIVED John L Wolf
DENVER, COLORADO SEPTEMBER 11, 2006

805–D–10485

K

D (24x36)

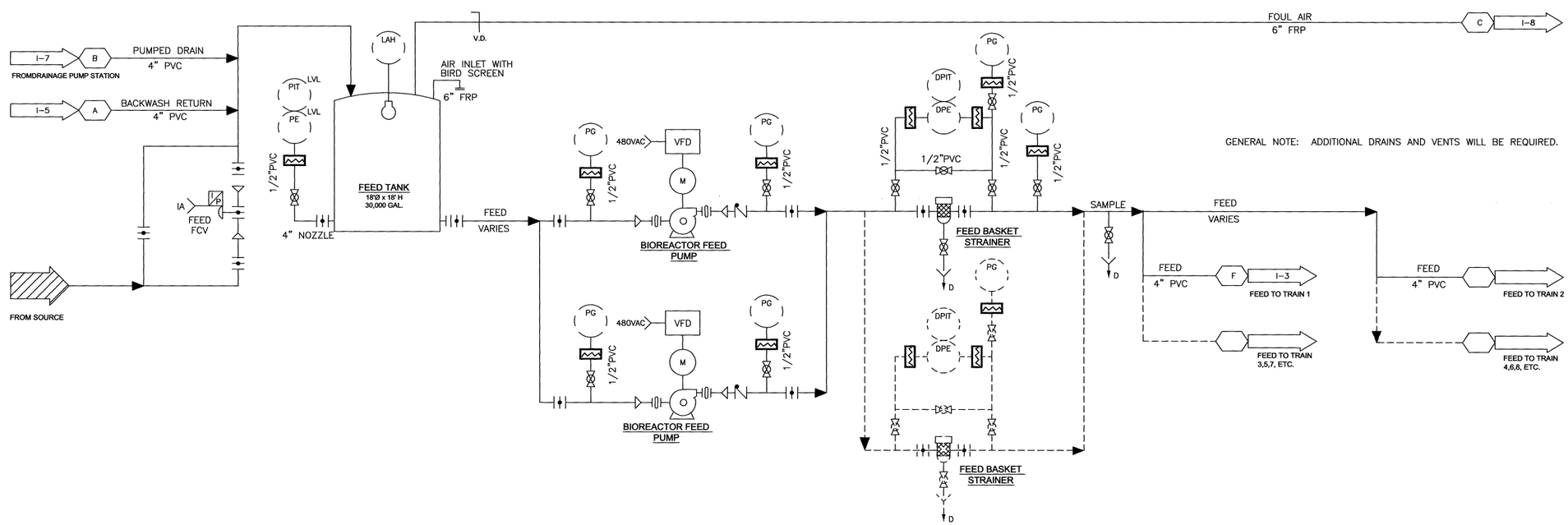

GENERAL NOTE: ADDITIONAL DRAINS AND VENTS WILL BE REQUIRED.

I/O COUNT			
	SMALL	MED	LRG
ANALOG INPUT	3	3	4
ANALOG OUTPUT	3	3	3
DISCREET INPUT	5	5	5
DISCREET OUTPUT	6	6	8

PRELIMINARY
DO NOT USE FOR CONSTRUCTION

THIS DOCUMENT EMBODIES DESIGNS AND INFORMATION PROPRIETARY TO ZENON ENVIRONMENTAL INC. IT IS TO BE USED ONLY FOR THE PURPOSE AND BY THE ENTITY FOR WHICH IT WAS ORIGINALLY SUPPLIED. THE DOCUMENT MAY NOT BE DUPLICATED, DISCLOSED TO ANY OTHER PERSON OR ENTITY, OR USED FOR MANUFACTURE OF THE ITEM IN PART OR IN WHOLE WITHOUT THE PRIOR WRITTEN PERMISSION OF ZENON ENVIRONMENTAL INC.

REV.	DATE	DESCRIPTION	ZONE	DSGN	APPD

APPROVAL		DATE (Y/M/D)
DRWN:	J.S.P.	04/06/29
DSGN:	M.D.	04/06/29
CHKD:	M.D.	
APPD:	J.J.	
CADD FILE:		
SCALE:	1:1	

ZENON Environmental Inc.
ZEI – OAKVILLE ONTARIO
Water for the World

CUSTOMER: COCA COLA – COLUMBUS, OHIO

TITLE: PIPING & INSTRUMENTATION DIAGRAM
MEMBRANE & EQUALIZATION TANK BLOWERS

SIZE: D | DRAWING NO. I-2 | SHEET 1 OF 1 | REV. A

ALWAYS THINK SAFETY

UNITED STATES
DEPARTMENT OF THE INTERIOR
BUREAU OF RECLAMATION
CENTRAL VALLEY PROJECT
WEST SAN JOAQUIN DIVISION – SAN LUIS UNIT – CALIFORNIA

DRAINAGE FEATURE
RE–EVALUATION FEASIBILITY STUDY
NORTHERLY AREA AND WESTLANDS WATER DISTRICT
SELENIUM BIOTREATMENT PLANT

RECEIVED _____
DENVER, COLORADO SEPTEMBER 11, 2008
805–D–10486

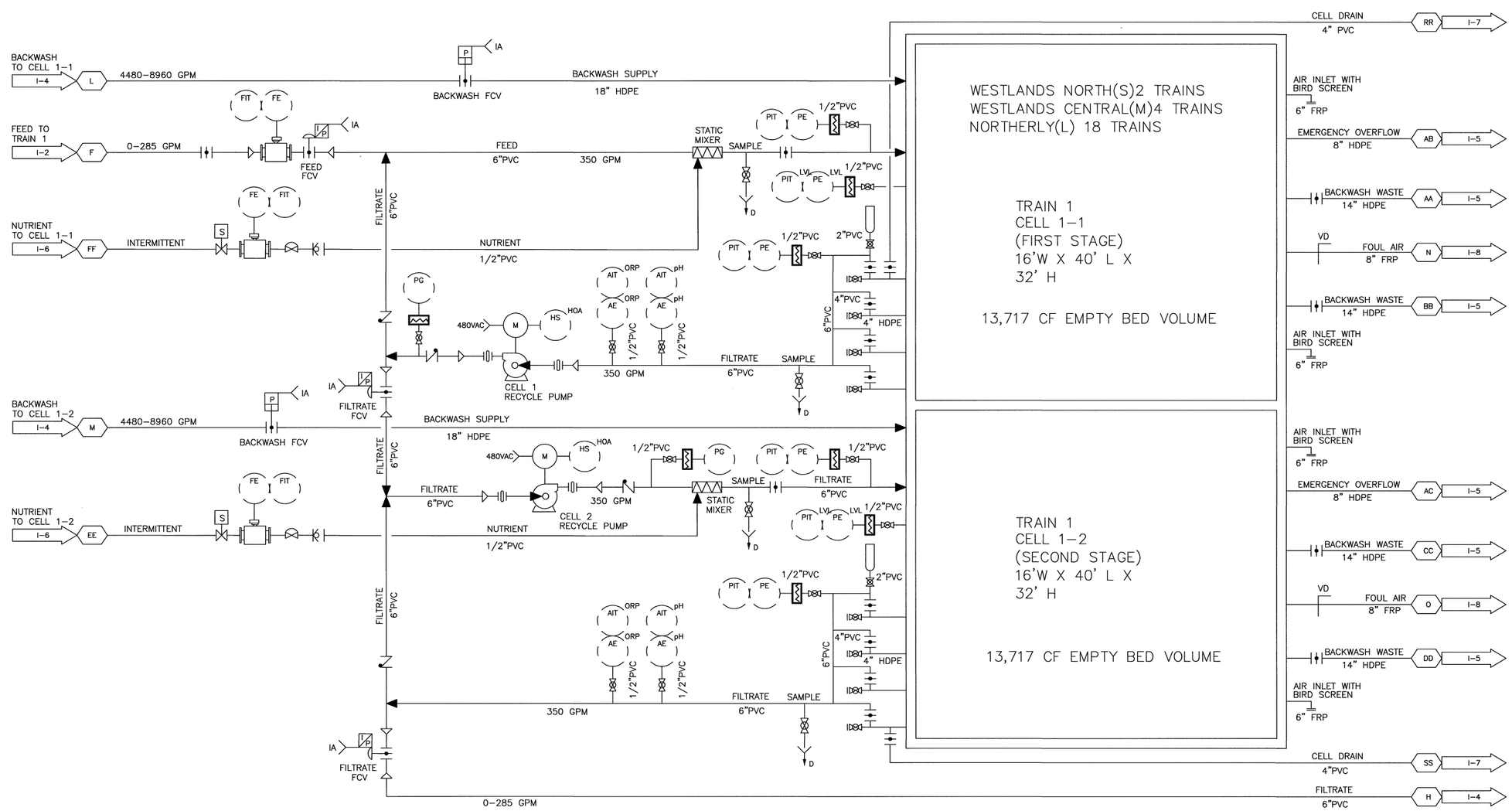

GENERAL NOTE: ADDITIONAL DRAINS AND VENTS WILL BE REQUIRED.

I/O COUNT			
	SMALL	MED	LRG
ANALOG INPUT	6	52	234
ANALOG OUTPUT	6	12	54
DISCREET INPUT	4	8	36
DISCREET OUTPUT	14	28	126

PRELIMINARY
DO NOT USE FOR CONSTRUCTION

THIS DOCUMENT EMBODIES DESIGNS AND INFORMATION PROPRIETARY TO ZENON ENVIRONMENTAL INC. IT IS TO BE USED ONLY FOR THE PURPOSE AND BY THE ENTITY FOR WHICH IT WAS ORIGINALLY SUPPLIED. THE DOCUMENT MAY NOT BE DUPLICATED, DISCLOSED TO ANY OTHER PERSON OR ENTITY, OR USED FOR MANUFACTURE OF THE ITEM IN PART OR IN WHOLE WITHOUT THE PRIOR WRITTEN PERMISSION OF ZENON ENVIRONMENTAL INC.

REV.	DATE	DESCRIPTION	ZONE	DSGN	APPD
A	8/18/05	PRELIMINARY – NOT FOR CONSTRUCTION		HFF	

APPROVAL		DATE (Y/M/D)
DRWN:	HFF	12/23/05
DSGN:	HFF	12/23/05
CHKD:		
APPD:		
CADD FILE: FIG-1-PFD.DWG		

ZENON Environmental Inc.
Water for the World

CUSTOMER:
TITLE: BIOREACTOR PIPE NETWORK DRAWING

SCALE: AS NOTED | SIZE: D | DRAWING NO. I-3 | SHEET 1 OF 1 | REV.

ALWAYS THINK SAFETY

UNITED STATES
DEPARTMENT OF THE INTERIOR
BUREAU OF RECLAMATION
CENTRAL VALLEY PROJECT
WEST SAN JOAQUIN DIVISION – SAN LUIS UNIT – CALIFORNIA
DRAINAGE FEATURE
RE-EVALUATION FEASIBILITY STUDY
NORTHERLY AREA AND WESTLANDS WATER DISTRICT
SELENIUM BIOTREATMENT PLANT

RECEIVED
DENVER, COLORADO SEPTEMBER 11, 2006
805-D-10487

GENERAL NOTE: ADDITIONAL DRAINS AND VENTS WILL BE REQUIRED.

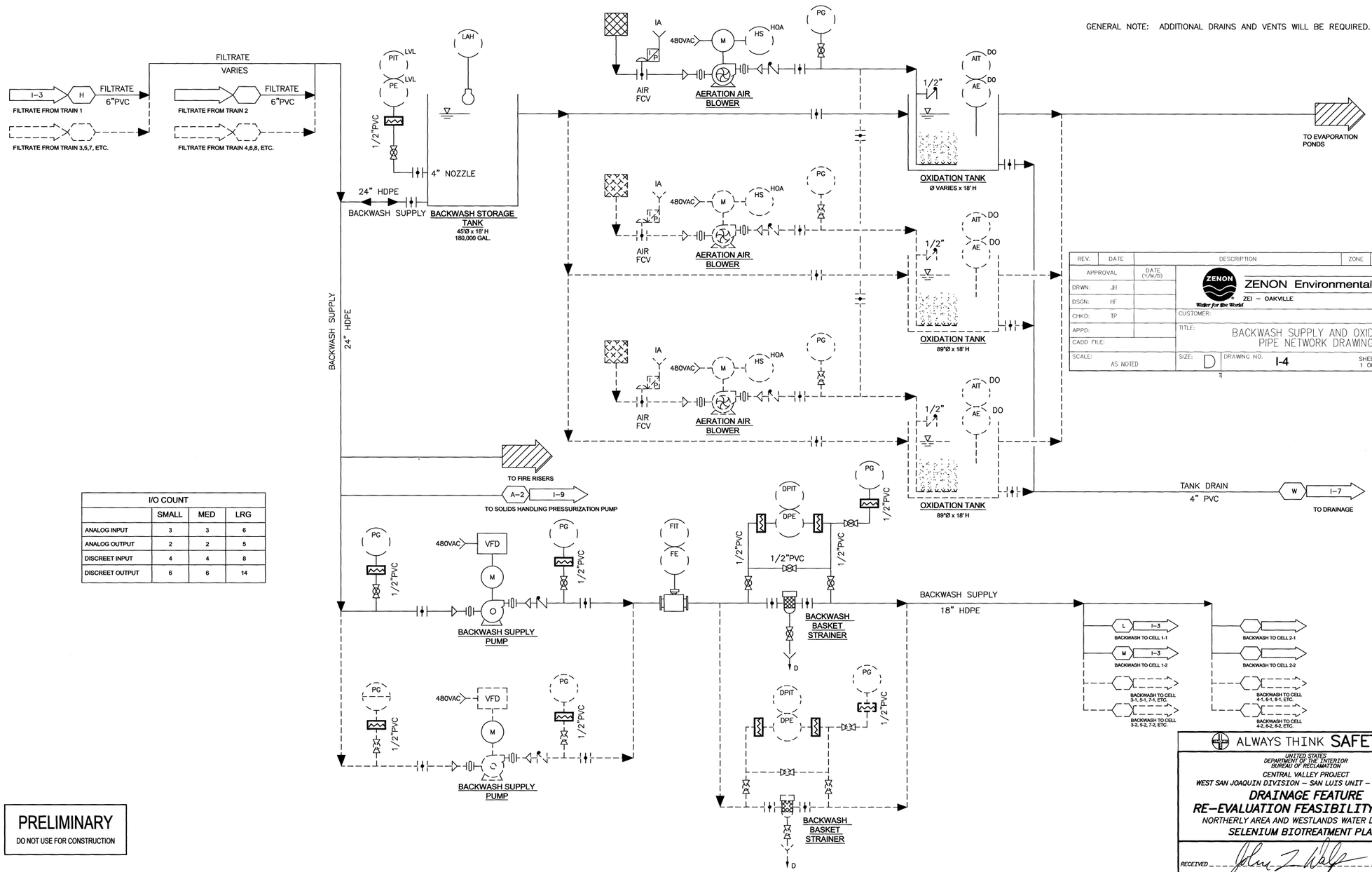

I/O COUNT			
	SMALL	MED	LRG
ANALOG INPUT	3	3	6
ANALOG OUTPUT	2	2	5
DISCREET INPUT	4	4	8
DISCREET OUTPUT	6	6	14

REV.	DATE	DESCRIPTION	ZONE	DSGN	APPD

APPROVAL		DATE (Y/M/D)
DRWN:	JH	
DSGN:	HF	
CHKD:	TP	
APPD:		
CADD FILE:		
SCALE:	AS NOTED	

ZENON Environmental Inc.
ZEI – OAKVILLE ONTARIO
Water for the World

CUSTOMER:

TITLE: BACKWASH SUPPLY AND OXIDATION PIPE NETWORK DRAWING

SIZE: D DRAWING NO. I-4 SHEET 1 OF 1 REV. A

PRELIMINARY
DO NOT USE FOR CONSTRUCTION

ALWAYS THINK SAFETY

UNITED STATES
DEPARTMENT OF THE INTERIOR
BUREAU OF RECLAMATION
CENTRAL VALLEY PROJECT
WEST SAN JOAQUIN DIVISION – SAN LUIS UNIT – CALIFORNIA

DRAINAGE FEATURE
RE-EVALUATION FEASIBILITY STUDY
NORTHERLY AREA AND WESTLANDS WATER DISTRICT
SELENIUM BIOTREATMENT PLANT

RECEIVED

DENVER, COLORADO SEPTEMBER 11, 2006 805-D-10488

THIS DOCUMENT EMBODIES DESIGNS AND INFORMATION PROPRIETARY TO ZENON ENVIRONMENTAL INC. IT IS TO BE USED ONLY FOR THE PURPOSE AND BY THE ENTITY FOR WHICH IT WAS ORIGINALLY SUPPLIED. THE DOCUMENT MAY NOT BE DUPLICATED, DISCLOSED TO ANY OTHER PERSON OR ENTITY, OR USED FOR MANUFACTURE OF THE ITEM IN PART OR IN WHOLE WITHOUT THE PRIOR WRITTEN PERMISSION OF ZENON ENVIRONMENTAL INC.

D (24x36)

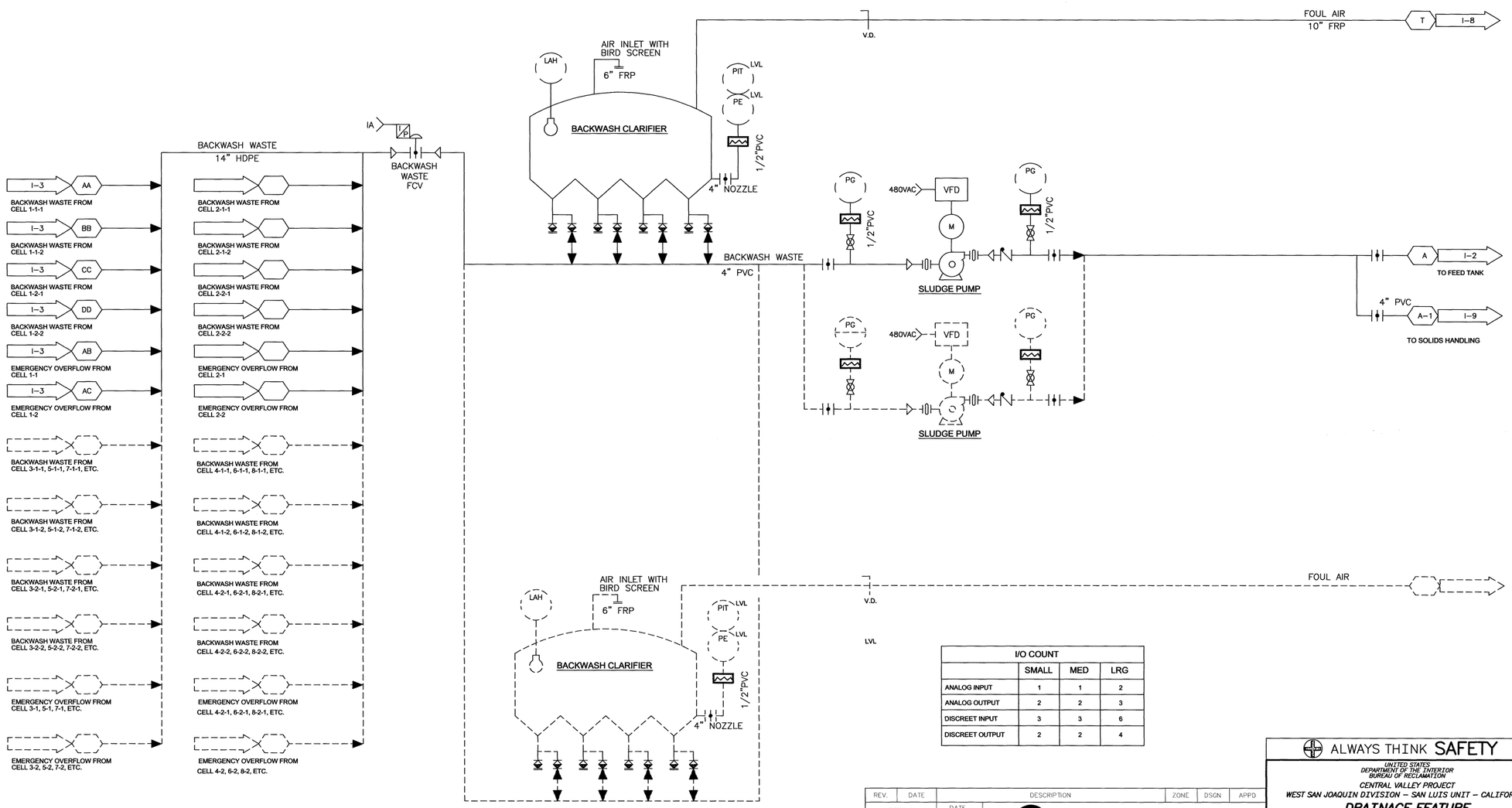

I/O COUNT			
	SMALL	MED	LRG
ANALOG INPUT	1	1	2
ANALOG OUTPUT	2	2	3
DISCREET INPUT	3	3	6
DISCREET OUTPUT	2	2	4

PRELIMINARY
DO NOT USE FOR CONSTRUCTION

THIS DOCUMENT EMBODIES DESIGNS AND INFORMATION PROPRIETARY TO ZENON ENVIRONMENTAL INC. IT IS TO BE USED ONLY FOR THE PURPOSE AND BY THE ENTITY FOR WHICH IT WAS ORIGINALLY SUPPLIED. THE DOCUMENT MAY NOT BE DUPLICATED, DISCLOSED TO ANY OTHER PERSON OR ENTITY, OR USED FOR MANUFACTURE OF THE ITEM IN PART OR IN WHOLE WITHOUT THE PRIOR WRITTEN PERMISSION OF ZENON ENVIRONMENTAL INC.

REV.	DATE	DESCRIPTION	ZONE	DSGN	APPD

APPROVAL		DATE (Y/M/D)
DRWN:	JH	
DSGN:	HF	
CHKD:	TP	
APPD:		
CADD FILE:		
SCALE:	AS NOTED	

ZENON Environmental Inc.
ZEI – OAKVILLE ONTARIO
Water for the World

CUSTOMER:
TITLE: BACKWASH WASTE PIPE NETWORK DRAWING
SIZE: D DRAWING NO. I-5 SHEET 1 OF 1 REV. A

ALWAYS THINK SAFETY

UNITED STATES
DEPARTMENT OF THE INTERIOR
BUREAU OF RECLAMATION
CENTRAL VALLEY PROJECT
WEST SAN JOAQUIN DIVISION – SAN LUIS UNIT – CALIFORNIA

DRAINAGE FEATURE
RE-EVALUATION FEASIBILITY STUDY
NORTHERLY AREA AND WESTLANDS WATER DISTRICT
SELENIUM BIOTREATMENT PLANT

RECEIVED
DENVER, COLORADO SEPTEMBER 11, 2008
805-D-10489

D (24x36)

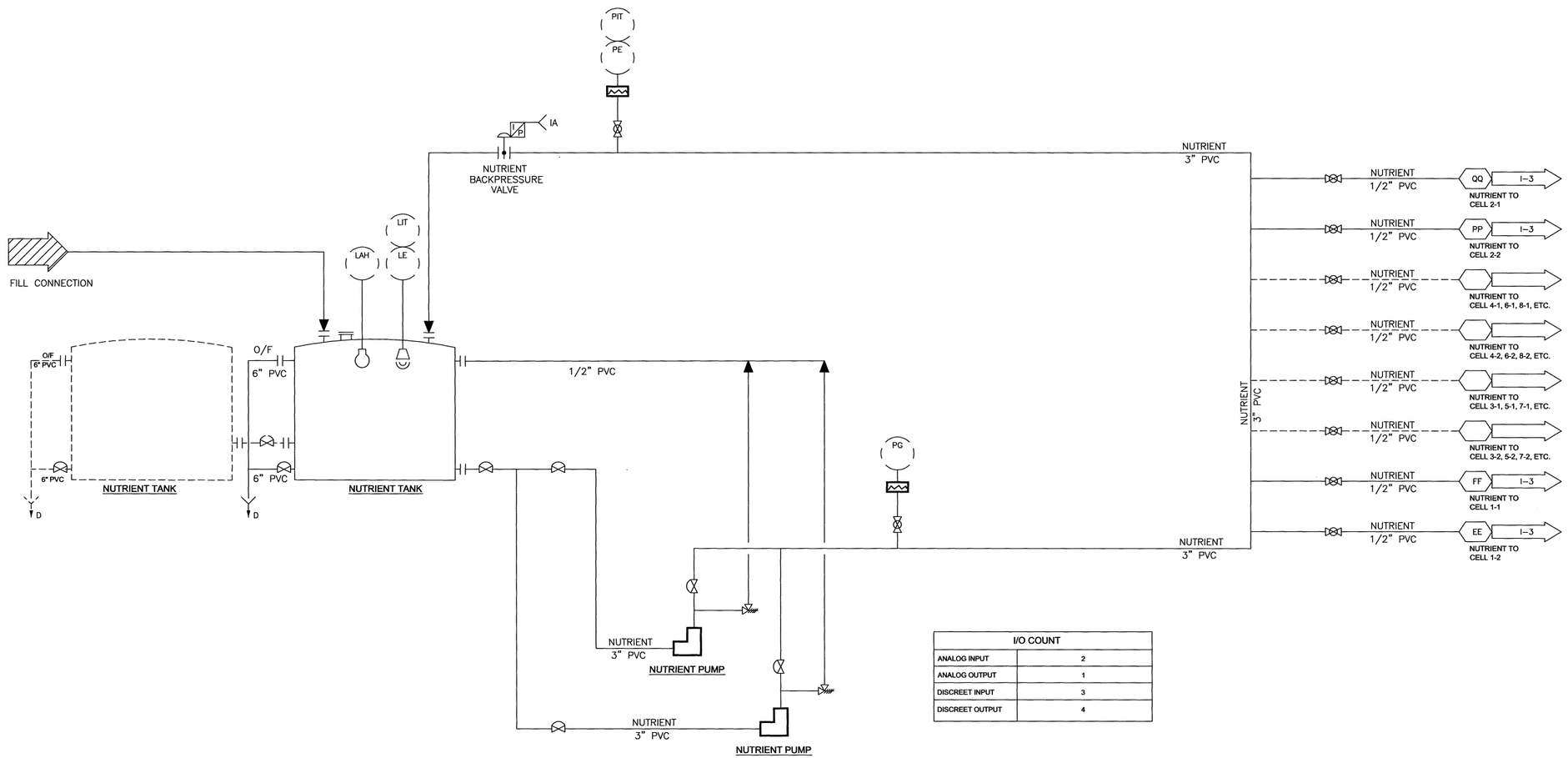

I/O COUNT	
ANALOG INPUT	2
ANALOG OUTPUT	1
DISCREET INPUT	3
DISCREET OUTPUT	4

PRELIMINARY
DO NOT USE FOR CONSTRUCTION

THIS DOCUMENT EMBODIES DESIGNS AND INFORMATION PROPRIETARY TO ZENON ENVIRONMENTAL INC. IT IS TO BE USED ONLY FOR THE PURPOSE AND BY THE ENTITY FOR WHICH IT WAS ORIGINALLY SUPPLIED. THE DOCUMENT MAY NOT BE DUPLICATED, DISCLOSED TO ANY OTHER PERSON OR ENTITY, OR USED FOR MANUFACTURE OF THE ITEM IN PART OR IN WHOLE WITHOUT THE PRIOR WRITTEN PERMISSION OF ZENON ENVIRONMENTAL INC.

REV.	DATE	DESCRIPTION	ZONE	DSGN	APPD

APPROVAL		DATE (Y/M/D)
DRWN:	JH	
DSGN:	HF	
CHKD:	TP	
APPD:		
CADD FILE:		
SCALE:	AS NOTED	

ZENON Environmental Inc.
ZEI – OAKVILLE ONTARIO
Water for the World

CUSTOMER:

TITLE: NUTRIENT PIPE NETWORK DRAWING

SIZE: D | DRAWING NO. I-6 | SHEET 1 OF 1 | REV. A

ALWAYS THINK SAFETY

UNITED STATES
DEPARTMENT OF THE INTERIOR
BUREAU OF RECLAMATION
CENTRAL VALLEY PROJECT
WEST SAN JOAQUIN DIVISION – SAN LUIS UNIT – CALIFORNIA

DRAINAGE FEATURE
RE-EVALUATION FEASIBILITY STUDY
NORTHERLY AREA AND WESTLANDS WATER DISTRICT
SELENIUM BIOTREATMENT PLANT

RECEIVED John Z Wolf
DENVER, COLORADO SEPTEMBER 11, 2008
805-D-10490

K

D (24x36)

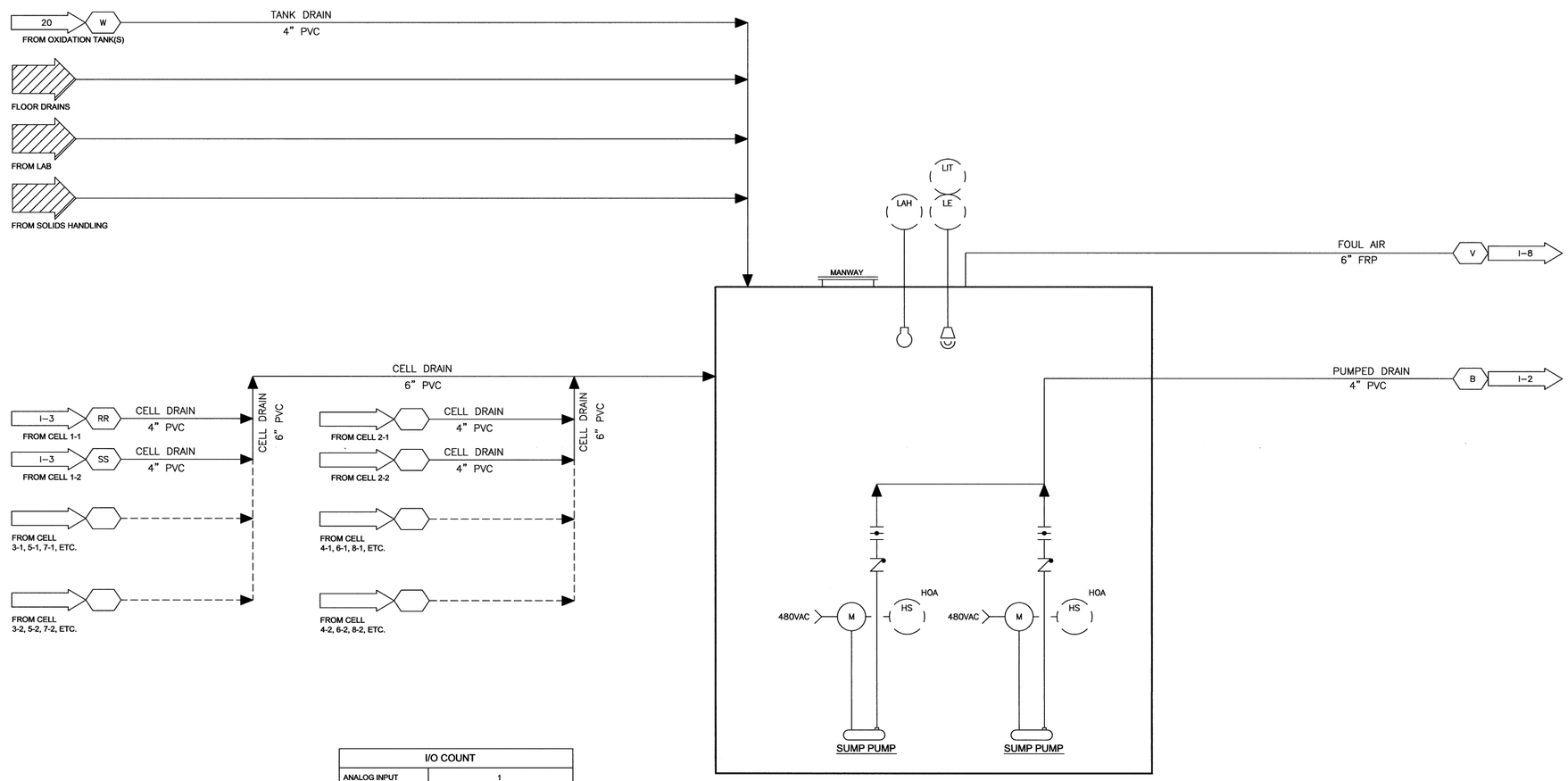

DRAINAGE PUMP STATION

I/O COUNT	
ANALOG INPUT	1
ANALOG OUTPUT	0
DISCREET INPUT	3
DISCREET OUTPUT	4

PRELIMINARY

DO NOT USE FOR CONSTRUCTION

THIS DOCUMENT EMBODIES DESIGNS AND INFORMATION PROPRIETARY TO ZENON ENVIRONMENTAL INC. IT IS TO BE USED ONLY FOR THE PURPOSE AND BY THE ENTITY FOR WHICH IT WAS ORIGINALLY SUPPLIED. THE DOCUMENT MAY NOT BE DUPLICATED, DISCLOSED TO ANY OTHER PERSON OR ENTITY, OR USED FOR MANUFACTURE OF THE ITEM IN PART OR IN WHOLE WITHOUT THE PRIOR WRITTEN PERMISSION OF ZENON ENVIRONMENTAL INC.

REV.	DATE	DESCRIPTION	ZONE	DSGN	APPD

APPROVAL		DATE (Y/M/D)
DRWN:	JH	
DSGN:	HF	
CHKD:	TP	
APPD:		
CADD FILE:		
SCALE:	AS NOTED	

ZENON Environmental Inc.
ZEI – OAKVILLE ONTARIO
Water for the World

CUSTOMER:

TITLE: DRAINAGE PIPE NETWORK DRAWING

SIZE: D | DRAWING NO. I-7 | SHEET 1 OF 1 | REV. A

ALWAYS THINK SAFETY

UNITED STATES
DEPARTMENT OF THE INTERIOR
BUREAU OF RECLAMATION

CENTRAL VALLEY PROJECT
WEST SAN JOAQUIN DIVISION – SAN LUIS UNIT – CALIFORNIA

DRAINAGE FEATURE
RE-EVALUATION FEASIBILITY STUDY
NORTHERLY AREA AND WESTLANDS WATER DISTRICT
SELENIUM BIOTREATMENT PLANT

RECEIVED John Z Wolf
DENVER, COLORADO SEPTEMBER 11, 2008

805-D-10491

D (24x36)

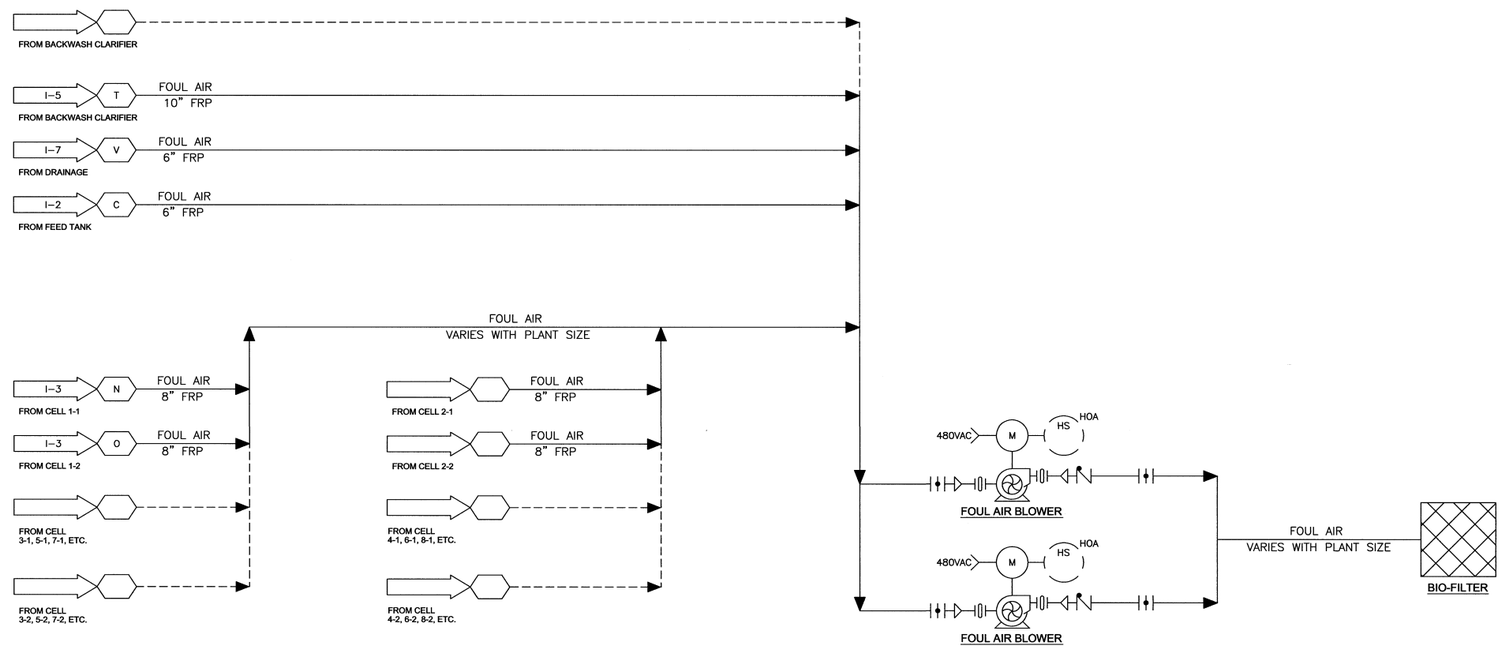

I/O COUNT	
ANALOG INPUT	0
ANALOG OUTPUT	0
DISCREET INPUT	3
DISCREET OUTPUT	5

PRELIMINARY
DO NOT USE FOR CONSTRUCTION

THIS DOCUMENT EMBODIES DESIGNS AND INFORMATION PROPRIETARY TO ZENON ENVIRONMENTAL INC. IT IS TO BE USED ONLY FOR THE PURPOSE AND BY THE ENTITY FOR WHICH IT WAS ORIGINALLY SUPPLIED. THE DOCUMENT MAY NOT BE DUPLICATED, DISCLOSED TO ANY OTHER PERSON OR ENTITY, OR USED FOR MANUFACTURE OF THE ITEM IN PART OR IN WHOLE WITHOUT THE PRIOR WRITTEN PERMISSION OF ZENON ENVIRONMENTAL INC.

REV.	DATE	DESCRIPTION	ZONE	DSGN	APPD

APPROVAL		DATE (Y/M/D)
DRWN:	JH	
DSGN:	HF	
CHKD:	TP	
APPD:		
CADD FILE:		
SCALE:	AS NOTED	

ZENON Environmental Inc.
ZEI – OAKVILLE ONTARIO
Water for the World

CUSTOMER:

TITLE: FOUL AIR PIPE NETWORK DRAWING

SIZE: D | DRAWING NO. I-8 | SHEET 1 OF 1 | REV.

ALWAYS THINK SAFETY

UNITED STATES
DEPARTMENT OF THE INTERIOR
BUREAU OF RECLAMATION
CENTRAL VALLEY PROJECT
WEST SAN JOAQUIN DIVISION – SAN LUIS UNIT – CALIFORNIA

DRAINAGE FEATURE
RE-EVALUATION FEASIBILITY STUDY
NORTHERLY AREA AND WESTLANDS WATER DISTRICT
SELENIUM BIOTREATMENT PLANT

RECEIVED _____
DENVER, COLORADO SEPTEMBER 11, 2008

805-D-10492

D (24x36)

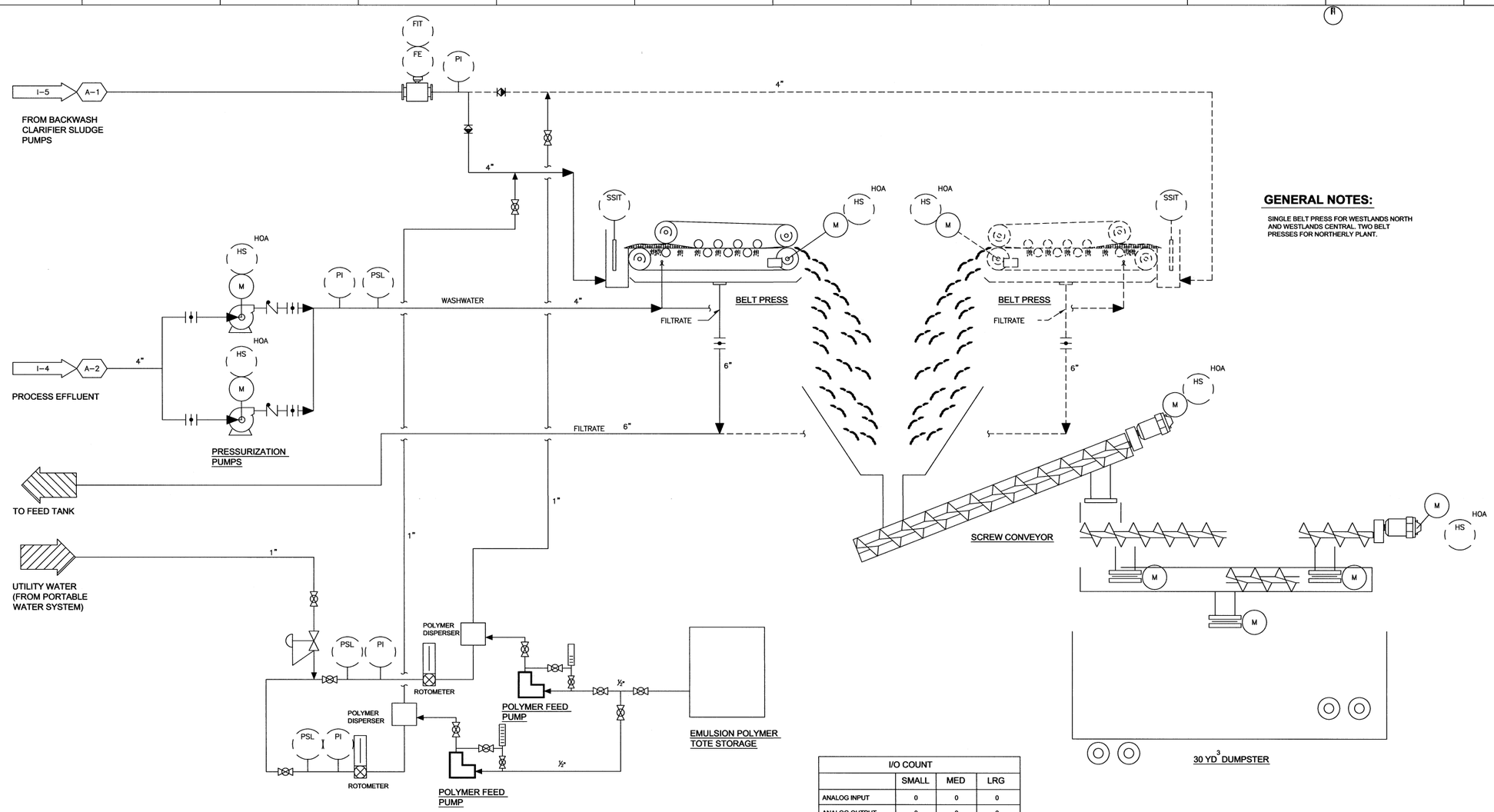

GENERAL NOTES:

SINGLE BELT PRESS FOR WESTLANDS NORTH AND WESTLANDS CENTRAL. TWO BELT PRESSES FOR NORTHERLY PLANT.

I/O COUNT			
	SMALL	MED	LRG
ANALOG INPUT	0	0	0
ANALOG OUTPUT	0	0	0
DISCREET INPUT	12	12	16
DISCREET OUTPUT			0

PRELIMINARY
DO NOT USE FOR CONSTRUCTION

THIS DOCUMENT EMBODIES DESIGNS AND INFORMATION PROPRIETARY TO ZENON ENVIRONMENTAL INC. IT IS TO BE USED ONLY FOR THE PURPOSE AND BY THE ENTITY FOR WHICH IT WAS ORIGINALLY SUPPLIED. THE DOCUMENT MAY NOT BE DUPLICATED, DISCLOSED TO ANY OTHER PERSON OR ENTITY, OR USED FOR MANUFACTURE OF THE ITEM IN PART OR IN WHOLE WITHOUT THE PRIOR WRITTEN PERMISSION OF ZENON ENVIRONMENTAL INC.

REV.	DATE	DESCRIPTION	ZONE	DSGN	APPD

APPROVAL		DATE (Y/M/D)
DRWN:	JH	
DSGN:	HF	
CHKD:	TP	
APPD:		
CADD FILE:		
SCALE:	AS NOTED	

ZENON Environmental Inc.
ZEI – OAKVILLE ONTARIO
Water for the World

CUSTOMER:
TITLE: SLUDGE HANDLING – LARGE SYSTEM PIPE NETWORK DRAWING
SIZE: D DRAWING NO. I-9 SHEET 1 OF 1 REV. A

ALWAYS THINK SAFETY

UNITED STATES
DEPARTMENT OF THE INTERIOR
BUREAU OF RECLAMATION
CENTRAL VALLEY PROJECT
WEST SAN JOAQUIN DIVISION – SAN LUIS UNIT – CALIFORNIA

DRAINAGE FEATURE
RE-EVALUATION FEASIBILITY STUDY
NORTHERLY AREA AND WESTLANDS WATER DISTRICT
SELENIUM BIOTREATMENT PLANT

RECEIVED John T. Wolp
DENVER, COLORADO SEPTEMBER 11, 2006
805-D-10493

D (24x36)

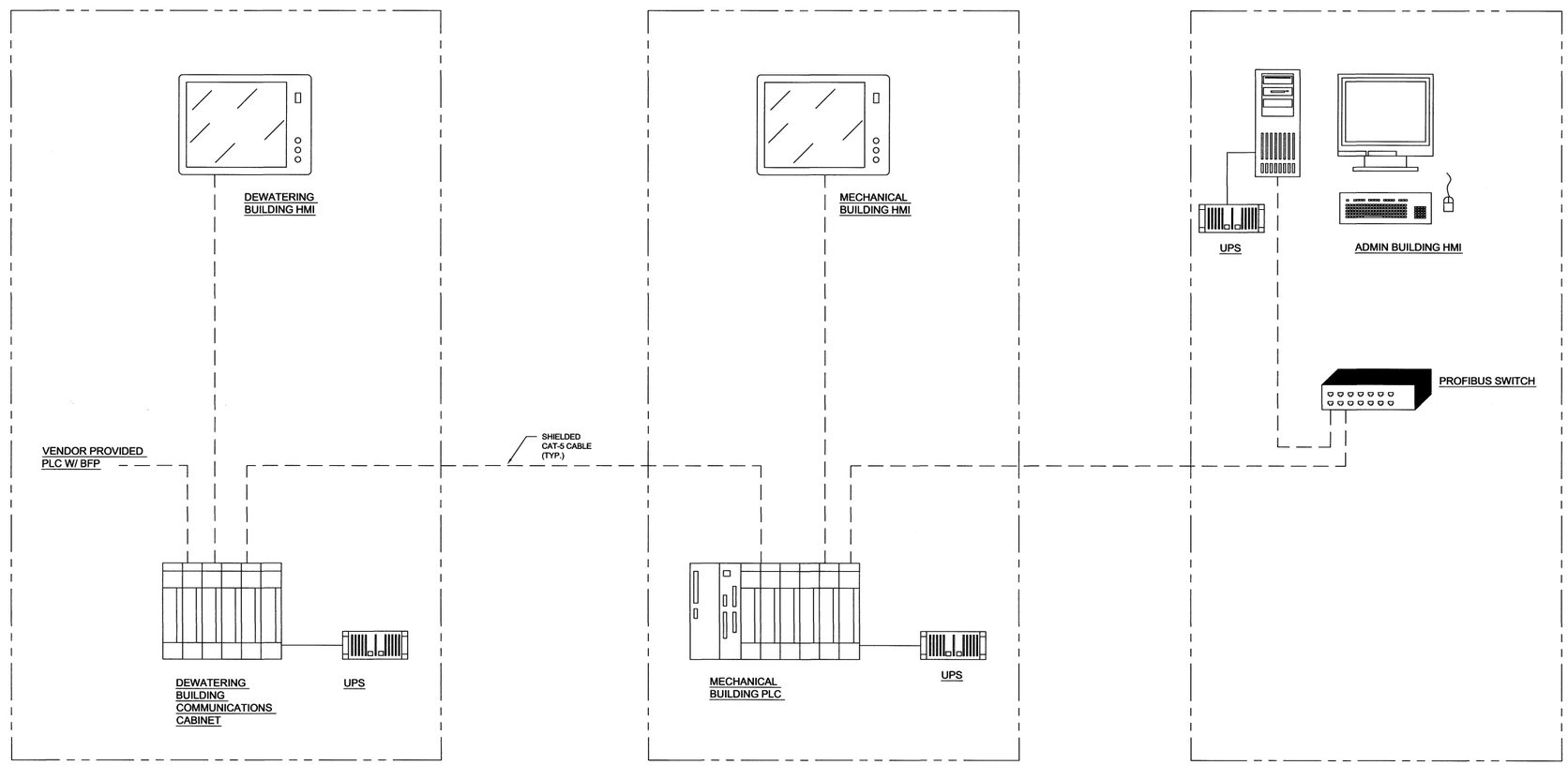

TOTAL I/O INCLUDING DEWATERING BLDG			
	SMALL	MED	LRG
ANALOG INPUT	44	75	299
ANALOG OUTPUT	17	24	80
DISCREET INPUT	45	50	96
DISCREET OUTPUT	50	66	198

NOTE:
ALL COUNTS INCLUDE 20% SPARES

PRELIMINARY
DO NOT USE FOR CONSTRUCTION

THIS DOCUMENT EMBODIES DESIGNS AND INFORMATION PROPRIETARY TO ZENON ENVIRONMENTAL INC. IT IS TO BE USED ONLY FOR THE PURPOSE AND BY THE ENTITY FOR WHICH IT WAS ORIGINALLY SUPPLIED. THE DOCUMENT MAY NOT BE DUPLICATED, DISCLOSED TO ANY OTHER PERSON OR ENTITY, OR USED FOR MANUFACTURE OF THE ITEM IN PART OR IN WHOLE WITHOUT THE PRIOR WRITTEN PERMISSION OF ZENON ENVIRONMENTAL INC.

REV.	DATE	DESCRIPTION	ZONE	DSGN	APPD

APPROVAL		DATE (Y/M/D)
DRWN:	JH	
DSGN:	HF	
CHKD:		
APPD:		
CADD FILE:		
SCALE:	AS NOTED	

ZENON Environmental Inc.
ZEI – OAKVILLE ONTARIO
Water for the World

CUSTOMER:

TITLE: SCADA SYSTEM BLOCK DIAGRAM

SIZE: D | DRAWING NO. I-10 | SHEET 1 OF 1 | REV. A

ALWAYS THINK SAFETY

UNITED STATES
DEPARTMENT OF THE INTERIOR
BUREAU OF RECLAMATION
CENTRAL VALLEY PROJECT
WEST SAN JOAQUIN DIVISION – SAN LUIS UNIT – CALIFORNIA
DRAINAGE FEATURE
RE–EVALUATION FEASIBILITY STUDY
NORTHERLY AREA AND WESTLANDS WATER DISTRICT
SELENIUM BIOTREATMENT PLANT

RECEIVED John Z Walp
DENVER, COLORADO SEPTEMBER 11, 2008
805–D–10494

D (24x36)

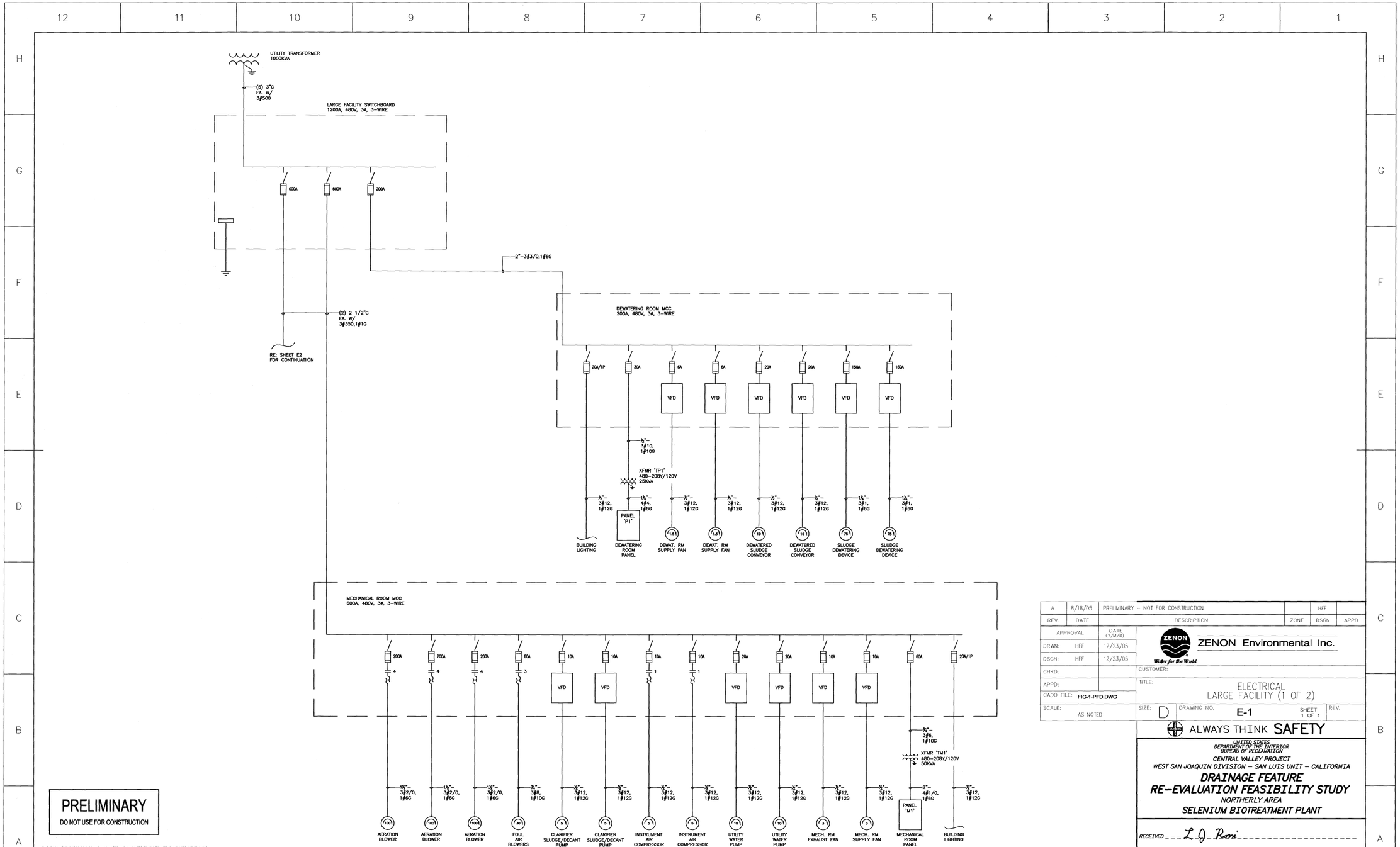

REV.	DATE	DESCRIPTION	ZONE	DSGN.	APPD
A	8/18/05	PRELIMINARY – NOT FOR CONSTRUCTION		HFF	

APPROVAL		DATE (Y/M/D)
DRWN:	HFF	12/23/05
DSGN:	HFF	12/23/05
CHKD:		
APPD:		
CADD FILE:	FIG-1-PFD.DWG	
SCALE:	AS NOTED	

ZENON Environmental Inc.

Water for the World

CUSTOMER:

TITLE: ELECTRICAL
LARGE FACILITY (1 OF 2)

SIZE: D | DRAWING NO. E-1 | SHEET 1 OF 1 | REV.

ALWAYS THINK SAFETY

UNITED STATES
DEPARTMENT OF THE INTERIOR
BUREAU OF RECLAMATION
CENTRAL VALLEY PROJECT
WEST SAN JOAQUIN DIVISION – SAN LUIS UNIT – CALIFORNIA

DRAINAGE FEATURE
RE-EVALUATION FEASIBILITY STUDY
NORTHERLY AREA
SELENIUM BIOTREATMENT PLANT

RECEIVED L. J. Rossi

DENVER, COLORADO SEPTEMBER 8, 2006 | 805-D-10495

PRELIMINARY
DO NOT USE FOR CONSTRUCTION

THIS DOCUMENT EMBODIES DESIGNS AND INFORMATION PROPRIETARY TO ZENON ENVIRONMENTAL INC. IT IS TO BE USED ONLY FOR THE PURPOSE AND BY THE ENTITY FOR WHICH IT WAS ORIGINALLY SUPPLIED. THE DOCUMENT MAY NOT BE DUPLICATED, DISCLOSED TO ANY OTHER PERSON OR ENTITY, OR USED FOR MANUFACTURE OF THE ITEM IN PART OR IN WHOLE WITHOUT THE PRIOR WRITTEN PERMISSION OF ZENON ENVIRONMENTAL INC.

D (24x36) K

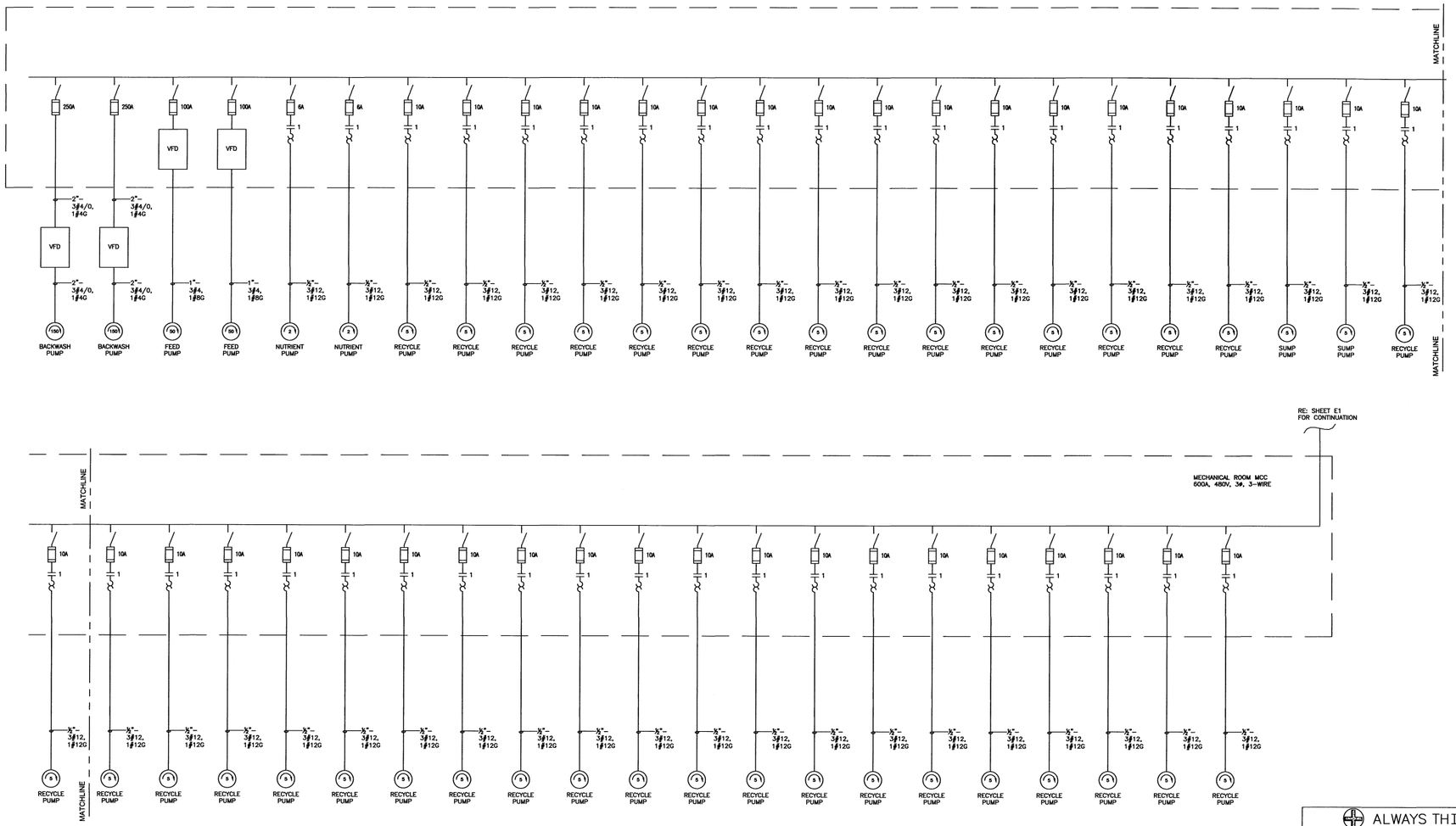

LARGE FACILITY ONE-LINE DIAGRAM, 2 of 2

SCALE: NTS

PRELIMINARY

DO NOT USE FOR CONSTRUCTION

THIS DOCUMENT EMBODIES DESIGNS AND INFORMATION PROPRIETARY TO ZENON ENVIRONMENTAL INC. IT IS TO BE USED ONLY FOR THE PURPOSE AND BY THE ENTITY FOR WHICH IT WAS ORIGINALLY SUPPLIED. THE DOCUMENT MAY NOT BE DUPLICATED, DISCLOSED TO ANY OTHER PERSON OR ENTITY, OR USED FOR MANUFACTURE OF THE ITEM IN PART OR IN WHOLE WITHOUT THE PRIOR WRITTEN PERMISSION OF ZENON ENVIRONMENTAL INC.

REV.	DATE	DESCRIPTION	ZONE	DSGN	APPD
A	8/18/05	PRELIMINARY – NOT FOR CONSTRUCTION		HFF	

APPROVAL		DATE (Y/M/D)
DRWN:	HFF	12/23/05
DSGN:	HFF	12/23/05
CHKD:		
APPD:		
CADD FILE:	FIG-1-PFD.DWG	
SCALE:	AS NOTED	

ZENON Environmental Inc.

Water for the World

CUSTOMER:

TITLE: ELECTRICAL LARGE FACILITY (2 OF 2)

SIZE: D DRAWING NO. E-2 SHEET 1 OF 1 REV.

ALWAYS THINK SAFETY

UNITED STATES
DEPARTMENT OF THE INTERIOR
BUREAU OF RECLAMATION
CENTRAL VALLEY PROJECT
WEST SAN JOAQUIN DIVISION – SAN LUIS UNIT – CALIFORNIA

DRAINAGE FEATURE
RE-EVALUATION FEASIBILITY STUDY
NORTHERLY AREA
SELENIUM BIOTREATMENT PLANT

RECEIVED L. J. Rossi

DENVER, COLORADO SEPTEMBER 8, 2006 805-D-10496

K

D (24x36)

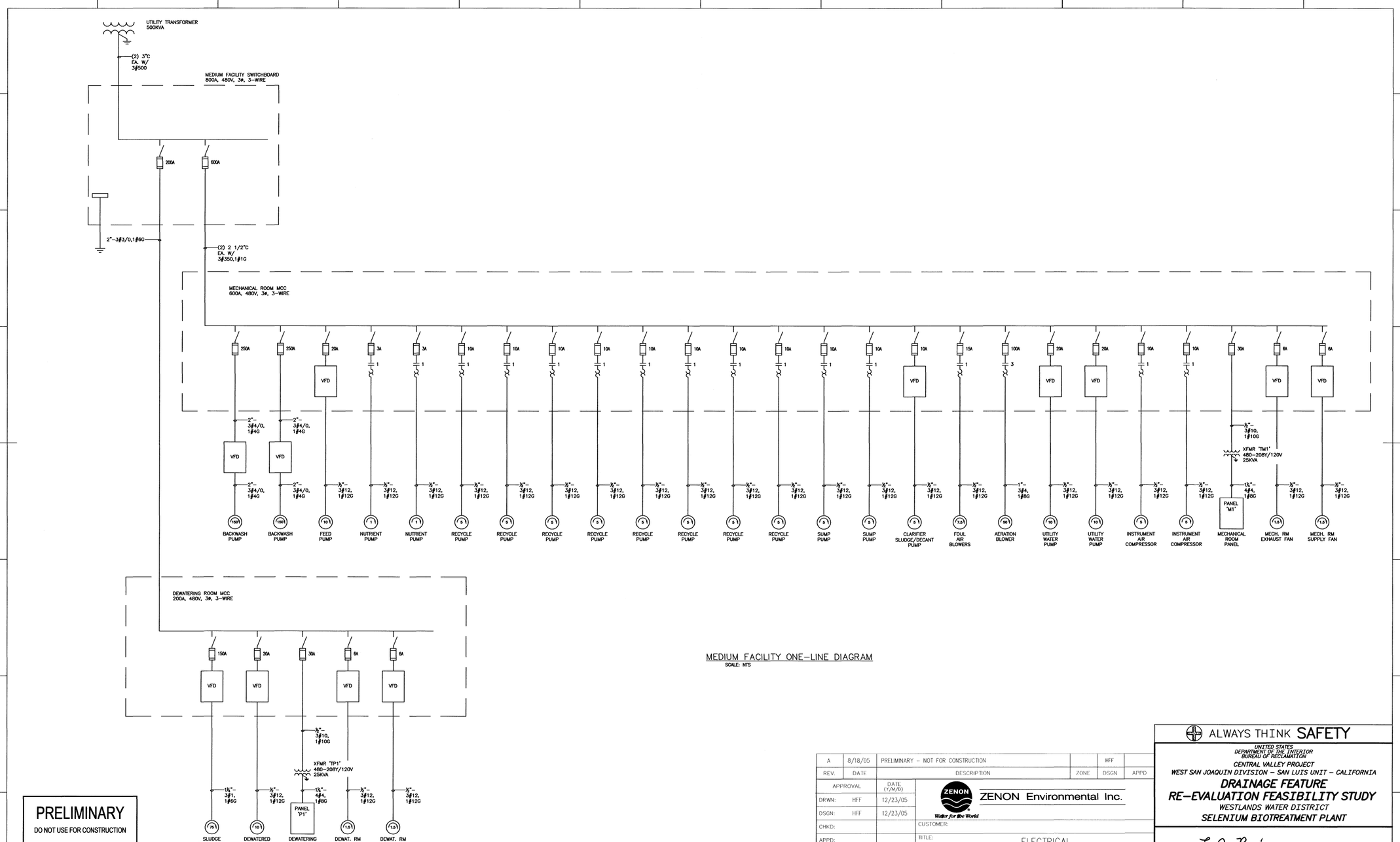

MEDIUM FACILITY ONE-LINE DIAGRAM
SCALE: NTS

PRELIMINARY
DO NOT USE FOR CONSTRUCTION

THIS DOCUMENT EMBODIES DESIGNS AND INFORMATION PROPRIETARY TO ZENON ENVIRONMENTAL INC. IT IS TO BE USED ONLY FOR THE PURPOSE AND BY THE ENTITY FOR WHICH IT WAS ORIGINALLY SUPPLIED. THE DOCUMENT MAY NOT BE DUPLICATED, DISCLOSED TO ANY OTHER PERSON OR ENTITY, OR USED FOR MANUFACTURE OF THE ITEM IN PART OR IN WHOLE, WITHOUT THE PRIOR WRITTEN PERMISSION OF ZENON ENVIRONMENTAL INC.

REV.	DATE	DESCRIPTION	ZONE	DSGN	APPD
A	8/18/05	PRELIMINARY - NOT FOR CONSTRUCTION		HFF	

APPROVAL		DATE (Y/M/D)
DRWN:	HFF	12/23/05
DSGN:	HFF	12/23/05
CHKD:		
APPD:		
CADD FILE:	FIG-1-PFD.DWG	
SCALE:	AS NOTED	

ZENON Environmental Inc.
Water for the World

CUSTOMER:
TITLE: ELECTRICAL MEDIUM FACILITY
SIZE: D DRAWING NO. E-3 SHEET 1 OF 1 REV.

ALWAYS THINK SAFETY

UNITED STATES
DEPARTMENT OF THE INTERIOR
BUREAU OF RECLAMATION
CENTRAL VALLEY PROJECT
WEST SAN JOAQUIN DIVISION - SAN LUIS UNIT - CALIFORNIA

DRAINAGE FEATURE
RE-EVALUATION FEASIBILITY STUDY
WESTLANDS WATER DISTRICT
SELENIUM BIOTREATMENT PLANT

RECEIVED L. J. Rossi
DENVER, COLORADO SEPTEMBER 8, 2008
805-D-10497 (K)

D (24x36)

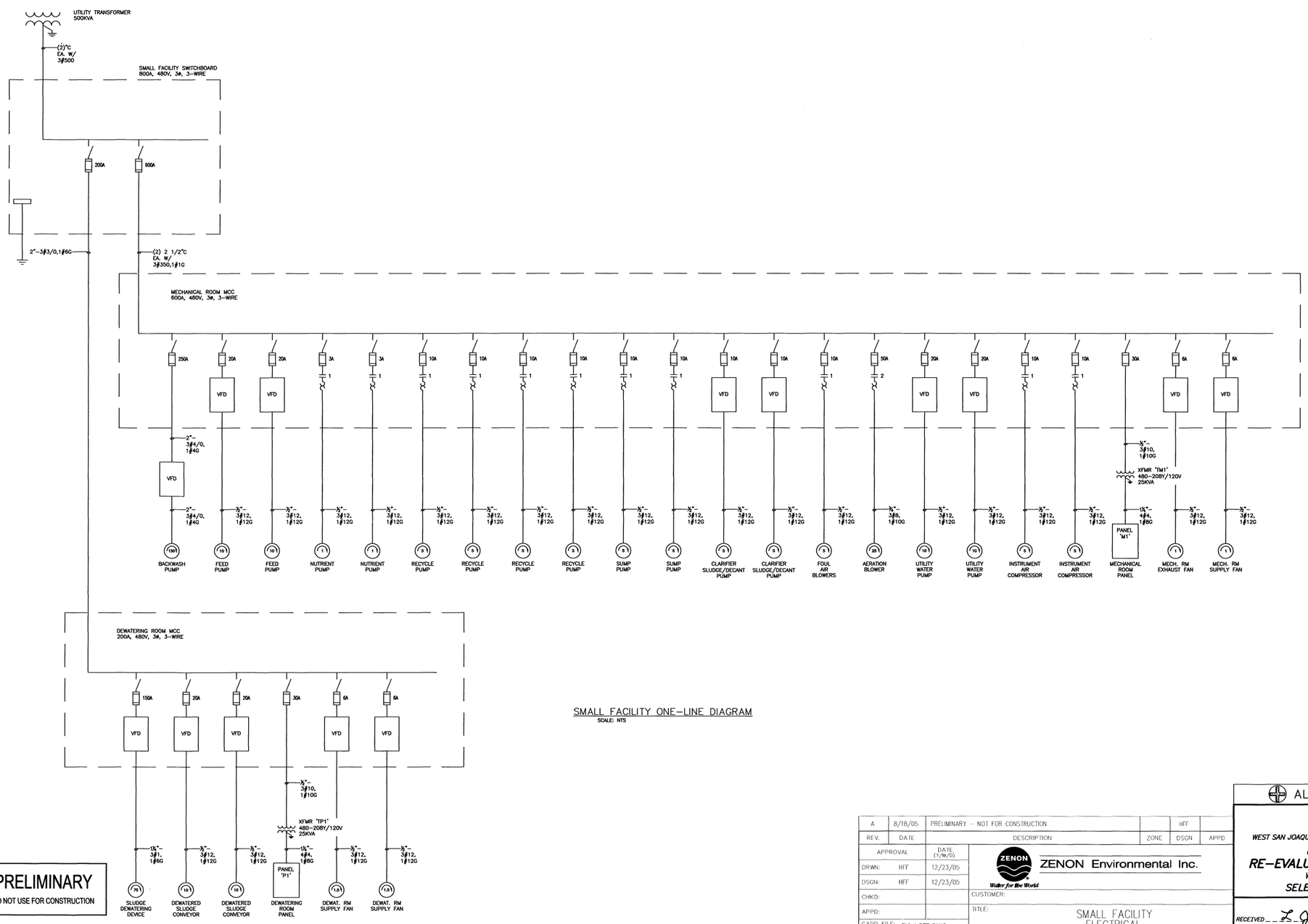

SMALL FACILITY ONE-LINE DIAGRAM
SCALE: NTS

PRELIMINARY
DO NOT USE FOR CONSTRUCTION

THIS DOCUMENT EMBODIES DESIGNS AND INFORMATION PROPRIETARY TO ZENON ENVIRONMENTAL INC. IT IS TO BE USED ONLY FOR THE PURPOSE AND BY THE ENTITY FOR WHICH IT WAS ORIGINALLY SUPPLIED. THE DOCUMENT MAY NOT BE DUPLICATED, DISCLOSED TO ANY OTHER PERSON OR ENTITY, OR USED FOR MANUFACTURE OF THE ITEM IN PART OR IN WHOLE WITHOUT THE PRIOR WRITTEN PERMISSION OF ZENON ENVIRONMENTAL INC.

REV.	DATE	DESCRIPTION	ZONE	DSGN	APPD
A	8/18/05	PRELIMINARY – NOT FOR CONSTRUCTION		HFF	

APPROVAL		DATE (Y/M/D)
DRWN:	HFF	12/23/05
DSGN:	HFF	12/23/05
CHKD:		
APPD:		
CADD FILE:	FIG-1-PFD.DWG	
SCALE:	AS NOTED	

ZENON Environmental Inc.
Water for the World

CUSTOMER:
TITLE: SMALL FACILITY ELECTRICAL
SIZE: D
DRAWING NO. E-4
SHEET 1 OF 1
REV.

ALWAYS THINK SAFETY

UNITED STATES
DEPARTMENT OF THE INTERIOR
BUREAU OF RECLAMATION
CENTRAL VALLEY PROJECT
WEST SAN JOAQUIN DIVISION – SAN LUIS UNIT – CALIFORNIA

DRAINAGE FEATURE
RE-EVALUATION FEASIBILITY STUDY
WESTLANDS WATER DISTRICT
SELENIUM BIOTREATMENT PLANT

RECEIVED L. J. Rossi
DENVER, COLORADO SEPTEMBER 8, 2006
805-D-10498 (K)

D (24x36)

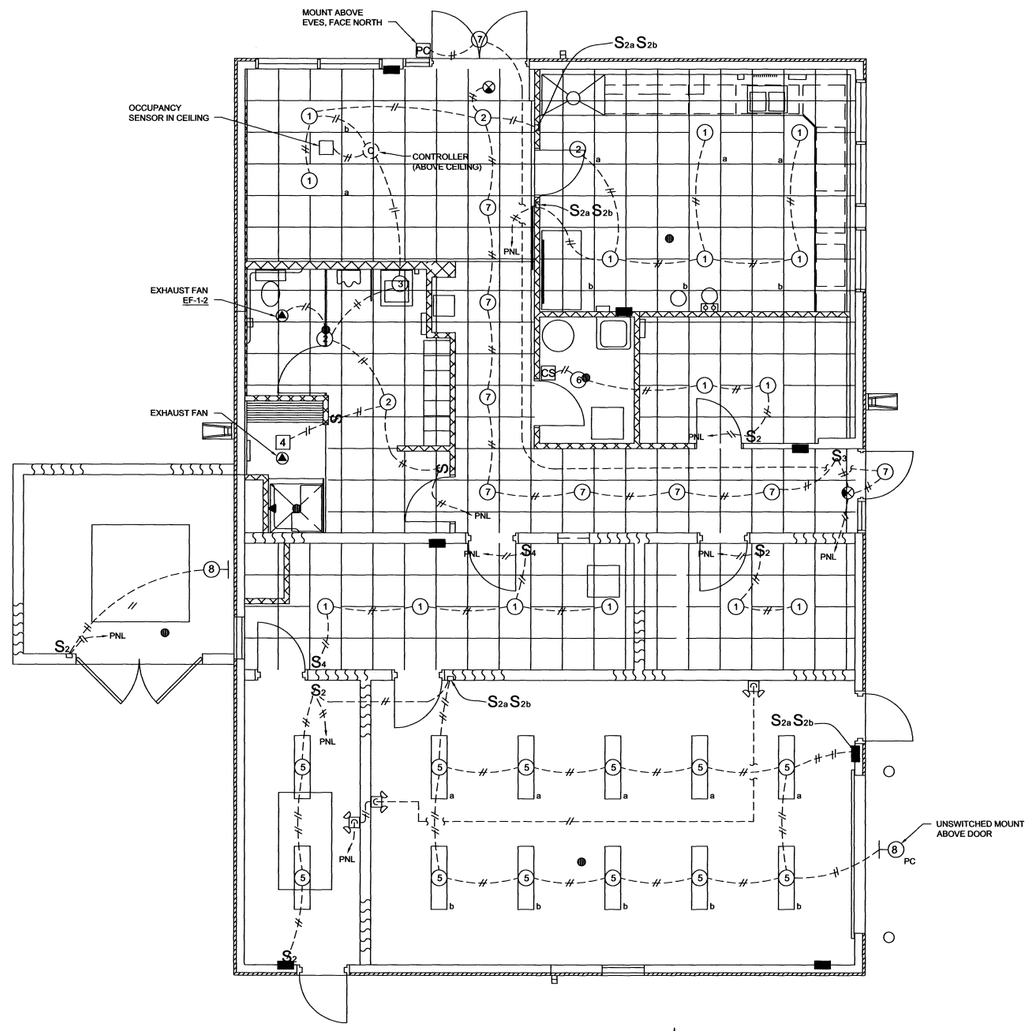

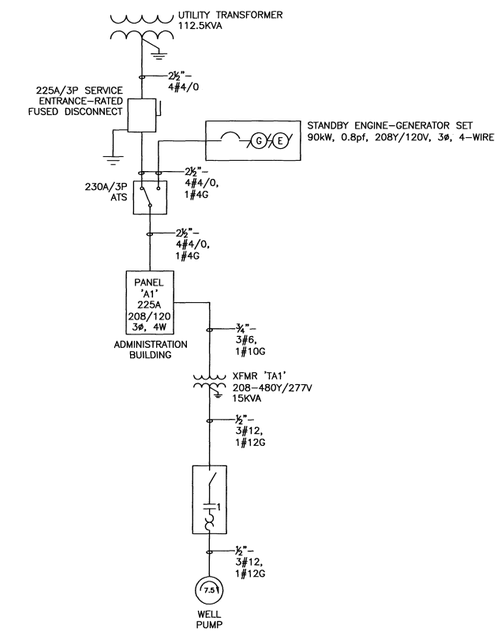

TYPICAL ADIMINSTRATION BUILDING ONE–LINE DIAGRAM

SCALE: NTS

PRELIMINARY

DO NOT USE FOR CONSTRUCTION

ADMINISTRATION BLDG LIGHTING PLAN

0 1' 4'

N

THIS DOCUMENT EMBODIES DESIGNS AND INFORMATION PROPRIETARY TO ZENON ENVIRONMENTAL INC. IT IS TO BE USED ONLY FOR THE PURPOSE AND BY THE ENTITY FOR WHICH IT WAS ORIGINALLY SUPPLIED. THE DOCUMENT MAY NOT BE DUPLICATED, DISCLOSED TO ANY OTHER PERSON OR ENTITY, OR USED FOR MANUFACTURE OF THE ITEM IN PART OR IN WHOLE WITHOUT THE PRIOR WRITTEN PERMISSION OF ZENON ENVIRONMENTAL INC.

REV.	DATE	DESCRIPTION	ZONE	DSGN	APPD

APPROVAL		DATE (Y/M/D)
DRWN:	JH	
DSGN:	HF	
CHKD:	TP	
APPD:		
CADD FILE:	2001090002.DGN	
SCALE:	AS NOTED	

ZENON Environmental Inc.
ZEI – OAKVILLE ONTARIO
Water for the World

CUSTOMER:

TITLE: ADMINISTRATION BLDG. LIGHTING PLAN AND ONE–LINE DIAGRAM

SIZE: D DRAWING NO. E-5 SHEET 1 OF 1 REV. A

ALWAYS THINK SAFETY

UNITED STATES
DEPARTMENT OF THE INTERIOR
BUREAU OF RECLAMATION
CENTRAL VALLEY PROJECT
WEST SAN JOAQUIN DIVISION – SAN LUIS UNIT – CALIFORNIA

DRAINAGE FEATURE RE–EVALUATION FEASIBILITY STUDY

NORTHERLY AREA AND WESTLANDS WATER DISTRICT
SELENIUM BIOTREATMENT PLANT

RECEIVED L. J. Roni

DENVER, COLORADO SEPTEMBER 8, 2006 805–D–10499

San Luis Drainage Feature Re-evaluation

Appendix A
Feasibility Design Appendix
Attachment 2 – Lands and Rights
Attachment 3 – Project and Construction Cost Estimates
Attachment 4 – Implementation Schedules

U.S. Department of the Interior
Bureau of Reclamation
Mid-Pacific Region
Sacramento, California

November 2007

Contents

Page

Attachment 2 – Lands and Rights ..... Attachment 2-1
Land and Rights Required for Land Retirement ..... Attachment 2-1
Land and Rights Required for Construction
of Project Features ..... Attachment 2-2
Treatment Facilities ..... Attachment 2-2
Real Estate Land Use Categories and Unit Pricing ..... Attachment 2-3
Other Costs Associated with Land and Rights ..... Attachment 2-4

Attachment 3 – Project and Construction Cost Estimates ..... Attachment 3-1
Cost Estimates Summary ..... Attachment 3-1
General ..... Attachment 3-1
Format and Additional Percentage Items ..... Attachment 3-2
Construction Cost Estimates and Project Cost Estimates Attachment 3-7

Attachment 4 – Implementation Schedules ..... Attachment 4-1
Drainage-Impaired Alternative ..... Attachment 4-1
Implementation Schedule ..... Attachment 4-1
Water Needs Alternative ..... Attachment 4-4
Implementation Schedule ..... Attachment 4-4

Attachment 2
Lands and Rights

Implementation of the San Luis Drainage Project will require Reclamation to acquire land and rights, including (1) nonirrigation easements or covenants to remove farmland from future irrigation; (2) fee purchase of land and rights for treatment facilities, reuse areas, and mitigation sites; and (3) permanent and temporary rights-of-way for the drainage collection and conveyance systems.

Land and Rights Required for Land Retirement

The Amended Plan of Action submitted by Reclamation to the Ninth District Circuit Court of Appeals on February 2004 included a provision to consider land retirement as a component for providing drainage service to the San Luis Unit. Land retirement will remove lands from irrigated agricultural production and convert them to other nonirrigated uses. This action will reduce the generation of excess drainwater and thereby reduce the volume of water requiring treatment. The real estate interest will be acquired through the purchase of nonirrigation covenants that restrict the use of irrigation water but permit the land to be used for grazing, fallowing, and dryland farming.

Three land retirement actions have already been completed, or are in process, in the San Luis Unit. These actions include: (1) the Britz Settlement (*Sumner Peck Ranch, In*c., *et al.* v. *Bureau of Reclamation*, et al., dated September 3, 2002), which consisted of 3,006 acres to be permanently retired under a settlement agreement between the United States, Westlands Water District, and the Britz group of plaintiffs in the Sumner Peck lawsuit; (2) the Sumner Peck Settlement, dated December 11, 2002, which consisted of 34,100 acres to be retired under an agreement between the United States, Westlands Water District, and the Peck plaintiffs of the Sumner Peck lawsuit; and (3) the Central Valley Project Improvement Act (CVPIA) Land Retirement, in which up to 7,000 acres will be retired under the existing CVPIA Act. To date, 2,091 acres have been retired under this program.

Land and Rights Required for Construction of Project Features

Treatment Facilities

Treatment facilities consist of reverse osmosis plants, selenium biotreatment plants, and evaporation ponds. These facilities are managed to treat drainwater and store byproducts. The treatment facilities have been co-located. Generally, lands used for treatment facilities were located on retired lands or lands designated for land retirement. These facilities are primarily located above ground, and the construction of these facilities will dedicate the land use to project activities. Lands containing these facilities and their appurtenant structures will be purchased in fee. Preliminary site layouts were developed for each site during the feasibility investigation, which allowed land requirements to be estimated.

Reuse Facilities

Reuse facilities consist of land that will be planted with salt-tolerant plants and provided with above and below ground distribution and drainage pipelines. These facilities are managed in such a way that overall drainwater volume is reduced. Generally, lands used for treatment facilities were located on retired lands or lands designated for land retirement. These facilities are primarily located above ground, and the construction of these facilities will dedicate the land use to project activities. Lands containing these facilities and their appurtenant structures will be purchased in fee. Preliminary site layouts were developed for each site during the feasibility investigation, which allowed land requirements to be estimated.

Mitigation Sites

Mitigation sites were located in such a way that they would best perform their function. This resulted in many sites that were co-located with treatment facilities and reuse areas. Construction of these facilities will dedicate the land use to project activities. Lands containing these facilities and their appurtenant structures will be purchased in fee. Preliminary site layouts were developed for each site during the feasibility investigation, which allowed land requirements to be estimated.

Drainage Collection and Conveyance Facilities

The drainage collection system will service project lands that are designated to receive drainage service. On-farm systems will discharge drainwater into collection system manholes and pipelines for conveyance to the reuse areas. Drainwater that needs to be removed from the reuse areas is pumped into the drainage conveyance system and carried to treatment facilities. With the exception of the manholes and above ground pumping plants, these pipeline facilities will be located below ground. Temporary and permanent easements will be acquired for construction of the collection and conveyance pipeline systems. Associated with these easements will be the right to access and maintain these

facilities. Preliminary site layouts were developed for these pipelines. Temporary easements were based upon acquisition of a 75-foot-wide, temporary construction easement. Permanent easements were based upon acquisition of a 20-foot-wide, permanent easement. Land and rights for manholes were assumed to be acquired with the permanent easements. Unless specifically identified in the cost estimates, fee purchase of land and rights for collection and conveyance pumping plants was acquired with the adjacent reuse areas.

Real Estate Land Use Categories and Unit Pricing

Reclamation acquired the service of Correai-Xavier, Inc., to conduct a market study of recent property sales in the San Joaquin Valley area. The results of their investigation are presented herein. Sales data were acquired over the 5-year period from 2002 through 2006. Sales in Fresno, Merced, Madera, Kings, Kern, and Tulare Counties were utilized. Approximately 900 sales were included in the analysis. These sales data were organized by primary land use category and year of sale. The land use categories that were utilized included Irrigated Field Cropland, Tree Orchards, Vineyards, and Unirrigated Native Lands. Effort was made to provide a net price per acre for the primary land use. Where mixed land uses were encountered, effort was made to extract the primary land use component. Additionally, improvements such as residences, shop and sheds, processing or storage facilities, and point values for pumps and motors were also extracted. The data was summarized by land use category for each of the 5 years of market data analyzed. The average cost per acre was calculated for each land use category listed over each of the 5 years of data.

The land requirements for the project were estimated on a parcel by parcel basis using Geographical Information System (GIS) techniques. Data from the 2005 National Agricultural Imagery Program and real estate parcel data for Fresno, Merced, and Kings Counties were overlaid on the project footprint and analyzed. Land use categories were assigned based on this analysis. The land use categories assigned in the GIS work differed from those presented in the Correai-Xavier, Inc., report. These categories were merged, based upon the following descriptions, and reflect the categories that were utilized in the cost estimates:

Permanent Crops	Includes orchards and vineyards lands
Seasonal Crops	Consist of irrigated field crops or seasonally fallow areas
Undeveloped	Natural vegetation or lands that have not been recently tilled
Mixed Built Lands	Residences, farm buildings, and farm-related business facilities

During development of the project feasibility design and the GIS analysis, minor coordination problems occurred that resulted in discrepancies between these data sets. The total land requirement was ultimately based upon the feasibility design. Land use data was updated by prorating to accommodate for these discrepancies. Table 1 presents the final land requirements that have been utilized in the cost estimates.

Unit prices for these land use categories were obtained from the 2006 average cost per acre values cited above from the Correai-Xavier, Inc., report. These costs were rounded up to assist with leveling the cost estimate. Where multiple land uses existed, the higher unit price was used. The unit prices used in the cost estimate are as follows:

Seasonal Crops	$ 4,000 per acre
Permanent Crops	$13,300 per acre
Undeveloped	$2,100 per acre
Mixed Built Lands	$15,000 per acre

The unit price presented for Mixed Built Lands is based on the vineyard sales analysis contained in the Correai-Xavier, Inc., report and represents a 15-acre, rural estate home site property. The unit price used to acquire permanent easements for the collection and conveyance systems will be priced at the full unit price value of the undeveloped land use category ($2,100). The unit price used to acquire temporary easements for the collection and conveyance systems will be priced at 70% of the unit price value of the undeveloped land use category ($1,470).

The number of real estate transactions that will be required to implement the alternatives is estimated as follows:

Water Needs Alternative	525 transactions
Drainage-Impaired Alternative	600 transactions

Other Costs Associated with Land and Rights

Other cost items associated with purchase of land and rights that have not been directly incorporated into the cost estimates, either as direct line items or as components in the above unit prices, and which may impact the total project costs include the following:

- Additional land and rights costs that may be incurred as a direct result of crop damages and severance damages.
- Additional land and rights costs that may be necessary to acquire uneconomic remnants.

Table 1. Summary of land and rights requirements

	Total Land Requirement	Permanent Crops	Seasonal Crops	Undeveloped	Mixed Built Land	Permanent Easement	Temporary Easement
Land Retirement							
Water Needs Alternative							
Retired Lands	142,894	0	140,180	2,270	444		
Drainage-Impaired Alternative							
Retired Lands	263,894	2,700	247,500	11,994	1,700		
Construction of Project Features							
Northerly Area							
RO Treatment Facility	4		4				
Se Treatment Facility	3		3				
Evaporation Ponds	1,650		1,630	20			
Reuse Area	8,388		8,388				
Mitigation	548		480	68			
Collection System	190					40	150
Conveyance System	0					0	0
WWD - North							
RO Treatment Facility	3		3				
Se Treatment Facility	2		2				
Evaporation Ponds	220		205	15			
Reuse Area	1,120		1,120				
Mitigation	65		65				
Collection System	723					152	571
Conveyance System	128					27	101
WWD - Central							
RO Treatment Facility	3		3				
Se Treatment Facility	2		2				
Evaporation Ponds	599		550	39	10		
Reuse Area	2,560		2,425	125	10		
Mitigation	191		191				
Collection System	2,032					428	1,604
Conveyance System	339					71	268

Table 1. Summary of land and rights requirements (continued)

	Total Land Requirement	Permanent Crops	Seasonal Crops	Undeveloped	Mixed Built Land	Permanent Easement	Temporary Easement
WWD – South							
RO Treatment Facility	3		3				
Se Treatment Facility	2		2				
Evaporation Ponds	352		330	22			
Reuse Area	1,760		1,760				
Mitigation	122		122				
Collection System	1,153					243	910
Conveyance System	139					29	110

RO = reverse osmosis, se = selenium, WWD = Westlands Water District

Notes:

1. Temporary easements for collection and conveyance systems based on 75-foot width throughout the length of the pipelines.
2. Permanent easements for collection and conveyance systems based on 20-foot width throughout the length of the pipelines.
3. Conveyance facilities within the Northerly Area were located on the reuse area. No right-of-way required
4. Reuse area in the Northerly Area requires 8,388 acres (3,803 acres of existing reuse plus 4,585 acres of proposed reuse).
5. Mitigation areas are consistent with environmental impact statement, record of decision, and feasibility study.
6. The retired land requirement for the Water Needs Alternative is composed of the following:

   Total retired lands within WWD = 184,000 acres
   Lands already retired within WWD = 44,106 acres
   Lands to be retired within WWD that are to be used for treatment and reuse areas = 7,000 acres
   Northerly Area lands to be retired (Broadview Water District) = 10,000 acres
   Total Water Needs Alternative lands to be purchased and retired = 142,894 acres (184,000 - 44,106-7,000 + 10,000)
7. The retired land requirement for the Drainage-Impaired Alternative is composed of the following:

   Total retired lands within WWD = 298,000 acres
   Lands already retired within WWD = 44,106 acres
   Northerly Area lands to be retired (Broadview Water District) = 10,000 acres
   Total Drainage-Impaired Alternative lands to be purchased and retired = 263,894 acres (298,000 - 44,106 + 10,000)

- Additional land and rights costs that may be related to any required condemnation actions.

These costs will be incorporated into the total project cost estimates through the use of unlisted items and contingencies percentage item.

Costs associated with administrative expenses required during the purchase of land and rights were not directly estimated. Rather, they were included in the cost estimates through the use of a noncontract percentage. Costs that may comprise the noncontract amount shown on the cost estimates and which may impact the total project costs include the following:

- Administrative costs required to process each acquisition. The estimated cost to process one acquisition is $25,000.

- Administrative costs to conduct hazardous materials surveys for lands to be purchased before acquisition. The estimated cost to conduct one hazardous materials survey for one parcel that is 80 to 160 acres in size is $8,000.

- Administrative costs to conduct cultural resources surveys. The estimated cost to conduct one cultural resources survey for one parcel that is 80 to 160 acres in size is $15,000.

- Administrative costs for possible Public Law 91-646 relocations. The estimated cost to process one relocation is $75,000. Additionally, it is estimated that no more than 10% of the required purchases will require relocation.

- Administrative costs related to any required condemnation actions. These costs vary widely and are related to the details of any such action. The estimated cost to process one condemnation action is $50,000. Additionally, it is estimated that no more than 10% of the required purchases will require condemnation action.

As indicated above, these costs were not directly itemized in the cost estimate; they were incorporated into the total project cost estimates through the use of a noncontract percentage.

Correia - Xavier
incorporated

August 17, 2006

Mr. Terry Cooke
URS Corp
Via email: Terry_Cooke@URSCorp.com

Re: Market Data Sales Study
San Joaquin Valley Region, California

Dear Mr. Cooke:

As you requested we are submitting our consulting study of market sales activity in the San Joaquin Valley region of California for the past years 2002 through 2006 thus far. We understand the purpose of this project is to assist with preliminary budget estimates for the proposed land retirement program.

The results of our study are summarized as follows:

Category	Year	Total # Sales	Total Acres	Total Value All Transactions	Average $ Per Acre	Minimum $ / Acre	Maximum $ / Acre
Irrigated Field Cropland	2002	21	5,991	$13,990,130	**$2,335**	$1,300	$4,729
	2003	45	21,069	$51,189,985	**$2,332**	$999	$3,266
	2004	29	9,506	$25,730,902	**$2,644**	$1,410	$6,007
	2005	24	12,626	$44,074,610	**$3,247**	$1,057	$5,300
	2006	19	9,167	$37,271,166	**$3,950**	$1,802	$5,700
Tree Orchards	2002	51	14,162	$109,913,156	**$6,496**	$1,778	$14,239
	2003	49	7,439	$58,202,553	**$5,767**	$2,044	$15,109
	2004	49	7,450	$57,903,690	**$7,391**	$2,919	$17,356
	2005	55	5,495	$61,231,845	**$9,831**	$4,400	$20,481
	2006	16	2,582	$37,524,500	**$13,275**	$9,000	$28,571
Vineyards	2002	85	8,360	$58,762,045	**$4,665**	$2,497	$22,593
	2003	111	9,428	$53,852,360	**$4,451**	$1,633	$11,459
	2004	132	9,246	$76,659,019	**$6,997**	$1,992	$40,008
	2005	90	9,195	$124,141,282	**$8,319**	$3,100	$39,427
	2006	35	2,477	$33,058,750	**$9,848**	$5,189	$46,176
Unirrigated, native, Land	2002	24	25,724	$20,852,500	**$768**	$75	$2,142
	2003	20	19,938	$15,906,000	**$785**	$381	$6,790
	2004	14	22,440	$16,772,000	**$710**	$125	$3,023
	2005	12	4,203	$7,199,864	**$1,713**	$484	$3,352
	2006	5	3,064	$6,570,452	**$2,067**	$1,374	$3,353

4186 West Swift Avenue, Suite 106, Fresno, California 93722
559.277.7474 ♦ 800.841.5502 ♦ Fax 559.277.7479♦ www.c-x.com

The general trend in this market is obvious; prices have been accelerating strongly in recent years, with the average price of irrigated land increasing by 69% from 2002 to mid-2006. Vineyards and orchards have both doubled in average price over that time. However, all markets are impacted to some degree or another by external forces, primarily the unprecedented land rush observed in California, and the USA, over these past years. Capital flowing from the tentative canyons of Wall Street in search of "safer," more stable investment opportunities has flooded real estate markets throughout the country, and this surge of investment capital, backed by inexpensive, readily available, debt financing, has flowed into rural markets, including the San Joaquin Valley.

Perhaps the most dramatic expression of this factor can be seen in smaller sales of vineyard properties, which are being purchased primarily as rural residential homesites. This influence has driven prices of smaller vineyard properties to historical highs, and the rush continues unabated. Although residential markets in general are beginning to show signs of softening, demand for rural estate homesites continues. This trend can be clearly observed in the data for vineyard sales in 2006, where smaller parcels clearly sell for much higher unit prices than larger parcels.

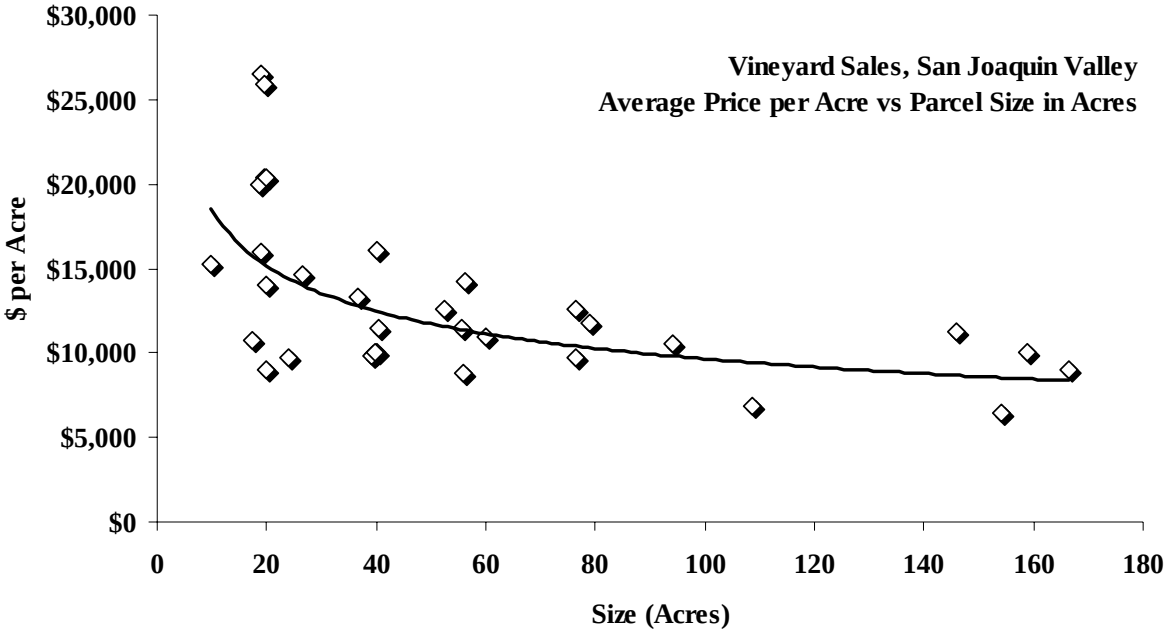

As shown in the above chart, smaller parcels of 10 to 30 acres tend to sell for much higher values as a consequence of the estate homesite phenomenon. Price per acre, as shown by the individual data points on the vertical, or Y axis, clearly decline as parcel size, in acres, increases, as shown on the horizontal, or X axis. A simple line of regression illustrates the obvious trend.

This report also includes backup documentation of the specific market data as individual transactions in a spreadsheet format. The data reflects net price per acre of actual vineyard and orchard acreages. Transactions which include mixed land uses are allocated to extract the indicated price per acre of the primary component, e.g., vineyard or orchard. Sale prices are calculated as net of any other improvements on the sale properties, i.e., residences, shops and sheds, and processing or storage facilities. Sale prices of irrigated field and row crop land also extract point values of well and pumps located on sale properties. Thus, each data set is intended to reflect the actual net sales price of the defined land use category, per actual acre of each respective category in each respective sale.

The irrigated field and row crop land data has been restricted to the areas served by the Central Valley Project in the westerly portion of the central San Joaquin Valley, including Westlands Water District, Panoche Water District, and the San Luis Water District. The remaining categories were drawn from the entire southern SJV market area.

We thank you for your interest in our firm's services and for giving us this opportunity to be of service to you.

Very truly yours,

Correia-Xavier, Inc.

Tony Correia, ARA
President

4186 West Swift Avenue, Suite 106, Fresno, California 93722
559.277.7474 ♦ 800.841.5502 ♦ Fax 559.277.7479♦ www.c-x.com

Exhibit "A"
Irrigated Land Sales

#	County	Recorded Date	Price	Total Acres	Area	Irrigation District	Type	Net $/Acre
1	Fresno	Feb-02	$30,000	20		WWD	OL	**$1,500**
2	Fresno	Mar-02	$1,000,000	320	Huron	WWD	OL	**$3,125**
3	Fresno	Apr-02	$102,500	40	San Joaquin	WWD	OL	**$2,563**
4	Fresno	May-02	$429,000	233		WWD	OL	**$1,841**
5	Kings	Nov-02	$631,480	287.69	Kettleman City	WWD	OL	**$2,195**
6	Fresno	Dec-02	$114,000	40	San Joaquin	WWD	OL	**$2,850**
7	Fresno	Dec-02	$800,000	617.35		WWD	OL	**$1,300**
8	Fresno	May-03	$1,410,000	640.72	Helm	WWD	OL	**$2,201**
9	Fresno	Jan-02	$970,380	205.19	Three Rocks	WWD	OL	**$4,729**
10	Fresno	Jan-02	$424,000	158.79	Huron	WWD	OL	**$2,650**
11	Fresno	Aug-02	$314,000	156.97	Huron	WWD	OL	**$2,000**
12	Fresno	Aug-02	$940,000	388.83	Huron	WWD	OL	**$2,418**
13	Fresno	Oct-02	$184,000	80	Huron	WWD	OL	**$2,300**
14	Fresno	Nov-02	$565,500	366.91	Cantua Creek	WWD	OL	**$1,541**
15	Fresno	Dec-02	$1,499,320	749.66		WWD	OL	**$2,000**
16	Fresno	Dec-02	$657,541	228.71	Cantua Creek	WWD	OL	**$2,437**
17	Fresno	Nov-02	$240,000	170	Cantua Creek	WWD	OL	**$1,412**
18	Fresno	Oct-02	$2,912,500	860.69	Firebaugh	SLWD	OL	**$3,383**
19	Fresno	Oct-02	$306,000	130.06	Firebaugh	SLWD	OL	**$2,350**
20	Merced	May-02	$72,000	177		SLWD	OL	**$2,500**
21	Merced	Feb-02	$387,909	119	Los Banos	SLWD	OL	**$3,260**
	TOTALS		**$13,990,130**	**5990.57**				**$2,407**

Min	$1,300
Max	$4,729
Mean	$2,335.36

Irrigated Land Sales, 2002

#	County	Recorded Date	Price	Total Acres	Area	Irrigation District	Type	Contributory value	Net $/Acre
1	Fresno	Jan-03	$1,787,500	615.15	Huron	WWD	OL	$150,000	**$2,662**
2	Fresno	Jan-03	$700,000	317.94	Huron	WWD	OL	$75,000	**$1,966**
3	Fresno	Jan-03	$1,875,000	681.81	Five Points	WWD	OL	$150,000	**$2,530**
4	Fresno	Mar-03	$1,609,000	518.41	Five Points	WWD	OL	$313,000	**$2,500**
5	Kings	Apr-03	$375,000	150	Lemoore	WWD	OL		**$2,500**
6	Fresno	Apr-03	$1,504,500	613.94	Vanguard	WWD	OL	$0	**$2,451**
7	Kings	Apr-03	$750,000	130.31	Lemoore	WWD	OL	$424,230	**$2,500**
8	Fresno	Apr-03	$511,331	318.19	Huron	WWD	OL		**$1,607**
9	Fresno	Apr-03	$2,240,000	640	Huron	WWD	OL	$150,000	**$3,266**
10	Fresno	May-03	$30,000	20	Helm	WWD	OL		**$1,500**
11	Fresno	May-03	$30,000	20	Helm	WWD	OL		**$1,500**
12	Fresno	May-03	$30,000	20	Helm	WWD	OL		**$1,500**
13	Fresno	May-03	$15,000	10	Helm	WWD	OL		**$1,500**
14	Fresno	May-03	$1,410,000	640.72	Helm	WWD	OL		**$2,201**
15	Fresno	Jun-03	$1,508,612	615.76	Helm	WWD	OL	$0	**$2,450**
16	Fresno	Jul-03	$1,440,000	640	Cantua Creek	WWD	OL	$100,000	**$2,094**
17	Fresno	Jul-03	$320,000	158.18	Mendota	WWD	OL	$0	**$2,023**
18	Fresno	Nov-03	$1,580,000	631.96	Cantua Creek	WWD	OL		**$2,500**
19	Fresno	Dec-03	$1,873,521	640.52	Mendota	WWD	OL	$0	**$2,925**
20	Fresno	Dec-03	$120,000	40	Mendota	WWD	OL	$0	**$3,000**
21	Fresno	Dec-03	$921,704	329.18	Mendota	WWD	OL	$0	**$2,800**
22	Fresno	Dec-03	$5,272,624	1883.08	Mendota	WWD	OL	$100,000	**$2,747**
23	Fresno	Dec-03	$165,500	63.13	Huron	WWD	OL		**$2,622**
24	Fresno	Sep-03	$832,000	309.21	Five Points	WWD	OL		**$2,691**
25	Fresno	Nov-03	$1,689,687	625.81	Mendota	WWD	OL	$62,581	**$2,600**
26	Fresno	Dec-03	$2,121,000	764.06	Mendota	WWD	OL	$0	**$2,776**
27	Fresno	Jan-03	$384,000	160	Cantua Creek	WWD	OL	$0	**$2,400**
28	Fresno	Apr-03	$408,000	323.58	Huron	WWD	OL		**$1,261**
29	Fresno	Apr-03	$232,000	116.57	Huron	WWD	OL		**$1,990**
30	Fresno	May-03	$7,500	5	Helm	WWD	OL		**$1,500**
31	Fresno	Jul-03	$224,000	158.18	Three Rocks	WWD	OL	$0	**$1,416**
32	Fresno	Jul-03	$480,000	158.96	Huron	WWD	OL	$122,000	**$2,252**
33	Fresno	Sep-03	$236,000	157.19	Three Rocks	WWD	OL		**$1,501**
34	Fresno	Oct-03		160	Mendota Area	WWD	OL		
35	Fresno	Oct-03	$2,973,000	1174.32	Huron	WWD	OL	$100,000	**$2,100**
36	Fresno	Dec-03	$6,725,570	2717.08	Huron	WWD	OL	$300,000	**$2,300**
37	Fresno	Apr-03	$169,300	169.3	Mendota	WWD	OL		**$1,000**
38	Fresno	Oct-03	$234,036	86.68		SLWD	OL	$0	**$2,700**
39	Merced	Oct-03	$1,300,000	1301.9	Santa Nella	SLWD	OL	$0	**$999**
40	Fresno	Sep-03	$1,778,000	658.55		SLWD	OL	$0	**$2,700**
41	Merced	Apr-03	$845,000	281.5	Los Banos	SLWD	OL	$0	**$3,002**
42	Fresno	Jan-03	$1,429,600	578.98	Firebaugh	SLWD	OL	$0	**$2,469**
43	Fresno	Jan-03	$840,000	350	Firebaugh	SLWD	OL	$0	**$2,400**
44	Fresno	Jan-03	$840,000	529.75	Firebaugh	SLWD	OL	$0	**$1,586**
45	Fresno	Mar-03	$1,372,000	584.1	Firebaugh	PWD	OL	$0	**$2,349**
			$51,189,985	**21069.00**				**$2,046,811**	**$2,198**

Min	$999
Max	$3,266
Mean	$2,332.49

#	County	Recorded Date	Price	Total Acres	Area	Irrigation District	Type	Contributory value	Net $/Acre
1	Fresno	Jan-04	$15,000	10.00	Helm	WWD	OL	$0	**$1,500**
2	Fresno	Jan-04	$15,000	10.00	Helm	WWD	OL	$0	**$1,500**
3	Fresno	Feb-04	$550,000	217.75	Mendota	WWD	OL	$0	**$2,526**
4	Fresno	Feb-04	$310,000	148.24	Mendota	WWD	OL	$0	**$2,091**
5	Fresno	Feb-04	$1,472,000	635.62	Cantua Creek	WWD	OL	$50,000	**$2,237**
6	Fresno	Apr-04	$352,000	160.00	Cantua Creek	WWD	OL	$0	**$2,200**
7	Fresno	Jun-04	$275,500	45.86	Three Rocks	WWD	OL	$0	**$6,007**
8	Fresno	Sep-03	$832,000	309.21	Five Points	WWD	OL	$0	**$2,691**
9	Fresno	Oct-04	$676,000	319.51	Five Points	WWD	OL	$0	**$2,116**
10	Fresno	Oct-04	$518,500	367.67	Five Points	WWD	OL	$0	**$1,410**
11	Fresno	Nov-04	$3,396,408	1,415.17	Mendota	WWD	OL	$0	**$2,400**
12	Fresno	Dec-04	$2,500,000	958.19	Five Points	WWD	OL	$0	**$2,609**
13	Fresno	Dec-04	$1,334,650	533.86	Mendota	WWD	OL	$0	**$2,500**
14	Fresno	Jan-04	$320,000	160.00	Cantua Creek	WWD	OL	$0	**$2,000**
15	Fresno	Feb-04	$250,000	70.40	Pilibos Ranch	WWD	OL	$24,500	**$3,203**
16	Fresno	Feb-04	$2,100,000	641.66	Huron	WWD	OL	$300,000	**$2,805**
17	Fresno	Mar-04	$1,750,000	636.38	Huron	WWD	OL	$50,000	**$2,671**
18	Fresno	May-04	$168,000	67.09	Huron	WWD	OL	$0	**$2,504**
19	Fresno	May-04	$654,630	218.29	Three Rocks	WWD	OL	$0	**$2,999**
20	Fresno	Jun-04	$210,000	80.00	Huron	WWD	OL	$0	**$2,625**
21	Fresno	Jul-04	$120,000	60.37	Mendota	WWD	OL	$0	**$1,988**
22	Fresno	Aug-03	$240,000	80.00	Huron	WWD	OL	$0	**$3,000**
23	Fresno	Nov-04	$1,293,146	367.67		WWD	OL	$0	**$3,517**
24	Fresno	Dec-04	$1,995,093	568.21	Mendota	WWD	OL	$0	**$3,511**
25	Merced	Apr-04	$655,500	144.00		SLWD	OL	$0	**$4,552**
26	Fresno	Jan-04	$92,000	40.00	Firebaugh	SLWD	OL	$0	**$2,300**
27	Tulare	Aug-04	$625,000	113.47	Porterville	PWD	OL	$0	**$5,531**
28	Fresno	May-04	$2,585,475	1,090.34	Firebaugh	PWD	OL	$0	**$2,371**
29	Fresno	Jan-04	$425,000	36.60	Firebaugh	PWD	OL	$170,000	**$5,984**
	TOTALS		**$25,730,902**	**9,505.56**				**$594,500**	**$2,644.39**

Min	$1,410
Max	$6,007
Mean	$2,644

#	County	Recorded Date	Price	Total Acres	Area	Irrigation District	Type	Contributory value	Net $/Acre
1	Fresno	Feb-05	$400,000	160.00		WWD	OL		**$2,500**
2	Fresno	May-05	$1,140,000	325.71	Mendota	WWD	OL	$0	**$3,500**
3	Fresno	May-05	$44,500	20.00		WWD	OL		**$2,225**
4	Fresno	Aug-05	$560,000	160.00	Huron	WWD	OL	$0	**$3,500**
5	Fresno	May-05	$1,798,868	580.28	Three Rocks	WWD	OL	$0	**$3,100**
6	Fresno	Jan-05	$4,170,000	1,266.51	Three Rocks	WWD	OL	$22,179	**$3,275**
7	Fresno	Jan-05	$440,000	160.00	Huron	WWD	OL		**$2,750**
8	Fresno	May-05	$212,000	40.00	Huron	WWD	OL		**$5,300**
9	Fresno	Jun-05	$679,500	157.94	Three Rocks	WWD	OL		**$4,302**
10	Fresno	Jun-05	$773,000	257.58	Five Points	WWD	OL		**$3,001**
11	Fresno	Apr-05	$550,000	320.00	Coalinga	WWD	OL		**$1,719**
12	Fresno	Oct-05	$805,000	161.20	Huron	WWD	OL		**$4,994**
13	Fresno	Sep-05	$66,000	62.42	Coalinga	WWD	OL		**$1,057**
14	Fresno	Oct-05	$19,104,680	5,458.48	Five Points	WWD	OL	$3,051,290	**$2,941**
15	Fresno	Dec-05	$2,012,868	437.58	Firebaugh	WWD	OL	$0	**$4,600**
16	Fresno	Nov-05	$1,066,500	322.74	Three Rocks	WWD	OL		**$3,305**
17	Fresno	Nov-05	$2,500,000	944.93	Five Points	WWD	OL		**$2,646**
18	Fresno	Sep-05	$528,000	160.00	Cantua Creek	WWD	OL		**$3,300**
19	Fresno	Jun-05	$495,694	165.22		SLWD	OL	$0	**$3,000**
20	Fresno	Jun-05	$2,683,000	506.00		SLWD	OL	$0	**$5,302**
21	Fresno	May-05	$81,000	27.75	Firebaugh	SLWD	OL	$0	**$2,919**
22	Fresno	Nov-05	$544,000	57.28	Firebaugh	PWD	OL	$0	**$9,500**
23	Fresno	Oct-05	$1,420,000	266.84	Firebaugh	PWD	OL	$0	**$5,322**
24	Fresno	Feb-05	$2,000,000	607.32	Firebaugh	PWD	OL	$0	**$3,293**
	TOTALS		**$44,074,610**	**12,625.78**				**$3,073,469**	**$3,247**

Min	$1,057
Max	$5,300
Mean	$3,247.41

#	County	Recorded Date	Price	Total Acres	Area	Irrigation District	Wells	Contributory value	Net $/Acre
1	Fresno	Jan-06	$1,555,000	320.00	Huron	WWD	OL	$175,000	**$4,313**
2	Fresno	Mar-06	$4,500,000	640.00	Huron	WWD	OL	$285,000	**$4,300**
3	Fresno	Jan-06	$443,500	158.79	Huron	WWD	OL		**$2,793**
4	Fresno	Jan-06	$502,000	166.97	Three Rocks	WWD	OL		**$3,007**
5	Fresno	Jan-06	$400,000	160.00	Huron	WWD	OL		**$2,500**
6	Fresno	Feb-06	$9,251,500	2,467.04	Cantua Creek	WWD	OL	$300,000	**$3,200**
7	Fresno	Mar-06	$460,000	160.00	Cantua Creek	WWD	OL	$0	**$2,875**
8	Fresno	Apr-06	$6,592,449	1,156.57	Huron	WWD	OL	$0	**$5,700**
9	Fresno	escrow	$906,842	318.19	Five Points	WWD	OL	$0	**$2,850**
10	Fresno	Apr-06	$3,364,375	940.64	Five Points	WWD	OL		**$3,577**
11	Fresno	Mar-06	$286,000	158.67	Mendota	WWD	OL		**$1,802**
12	Fresno	Mar-06	$400,000	160.00	Five Points	WWD	OL		**$2,500**
13	Fresno	Mar-06	$317,000	126.74	Five Points	WWD	OL		**$2,501**
14	Fresno	Mar-06	$514,000	128.49	Mendota	WWD	OL		**$4,000**
15	Fresno	Mar-05	$100,000	40.00	Three Rocks	WWD	OL		**$2,500**
16	Fresno	Mar-06	$3,954,000	1,206.56	Five Points	WWD	OL	$300,000	**$3,028**
17	Fresno	Apr-06	$120,000	60.00	Three Rocks	WWD	OL		**$2,000**
18	Fresno	Jan-06	$404,500	160.00	Huron	WWD	OL		**$2,528**
19	Fresno	Feb-06	$3,200,000	638.81	Firebaugh	PWD	OL	$0	**$5,009**
	TOTALS		**$37,271,166**	**9,167.47**				**$1,060,000**	**$3,950**

Min	$1,802
Max	$5,700
Mean	$3,950

Exhibit "B"
Orchard Sales

#	County	Recorded Date	Price	Total Acres	Orchard Acres	Area	Irrigation District	Type	CV	Net $/Acre
1	Fresno	03-Jan-02	$970,380	205.19	140.00	Three Rocks	WWD	NC	$0	**$6,000**
2	Madera	10-Jan-02	$1,931,000	263.20	184.90	Chowchilla	CWD	NC	$250,000	**$7,337**
3	Tulare	07-Feb-02	$6,200,000	836.93	84.00	Tulare	TID	NC	$0	**$12,500**
4	Fresno	12-Feb-02	$1,760,000	320.00	40.00	Kingsburg	CID	NC	$0	**$8,400**
5	Fresno	12-Feb-02	$1,000,000	302.66	175.75	Kerman	P/W	NC	$0	**$3,878**
6	Fresno	21-Feb-02	$265,000	39.00	15.75	Kerman	FID	NC	$20,000	**$8,250**
7	Madera	22-Feb-02	$576,000	134.07	111.50	Madera	MID	NC	$40,000	**$5,169**
8	Madera	22-Feb-02	$725,000	59.39	59.39	Madera		NC	$0	**$12,207**
9	Fresno	06-Mar-02	$316,000	177.72	177.72		WWD	NC	$0	**$1,778**
10	Fresno	07-Mar-02	$393,500	157.30	157.30		WWD	NC	$0	**$2,501**
11	Madera	08-Mar-02	$290,000	80.33	80.33	Madera Ranchos	MID	NC	$0	**$3,610**
12	Kern	13-Mar-02	$3,080,000	521.84	376.00	Wasco	NKWSD	NC	$0	**$7,114**
13	Fresno	20-Mar-02	$10,447,000	1,685.23	1,685.23	Firebaugh	SLWD	NC	$0	**$6,360**
14	Madera	27-Mar-02	$308,000	87.95	87.95		MID	NC	$0	**$3,388**
15	Madera	27-Mar-02	$875,000	253.54	253.54	Madera	P/W / MID	NC	$164,000	**$3,451**
16	Madera	27-Mar-02	$308,000	88.11	88.11	Madera		NC	$10,000	**$3,382**
17	Madera	27-Mar-02	$164,500	68.77	68.77		P/W	NC	$0	**$2,800**
18	Madera	11-Apr-02	$130,000	9.49	9.49	Madera Ranchos		NC	$0	**$13,699**
19	Madera	15-Apr-02	$130,000	9.13	9.13	Madera Ranchos		NC	$0	**$14,239**
20	Madera/Merced	15-Apr-02	$295,500	61.17	61.17	Chowchilla	CWD	NC	$56,000	**$3,907**
21	Merced	15-Apr-02	$3,200,000	623.38	491.00	Snelling	MID	NC	$0	**$6,114**
22	Madera	03-May-02	$660,000	240.00	240.00	Madera Ranchos	P/W	NC	$0	**$2,750**
23	Madera	09-May-02	$600,000	157.29	157.29	Chowchilla	MID	NC	$0	**$3,815**
24	Kern	29-May-02	$4,379,000	603.78	603.78	McFarland	SSJMUD	NC	$0	**$7,252**
25	Madera	30-May-02	$4,850,000	1,551.34	761.98	Chowchilla		NC	$0	**$4,393**
26	Kern	06-Jun-02	$962,500	150.36	150.36	Wasco	SWSD	NC	$0	**$6,809**
27	Kern	13-Jun-02	$1,750,000	308.06	308.06	Delano	SSJMUD	NC	$150,000	**$5,194**
28	Kern	25-Jun-02	$1,024,320	155.20	155.20	Wasco	SWID	NC	$0	**$6,600**
29	Fresno	28-Jun-02	$730,000	159.26	159.26			NC	$0	**$4,583**
30	Madera	28-Jun-02	$130,000	9.57	9.57	Madera Ranchos		NC	$0	**$13,584**
31	Merced	23-Jul-02	$520,000	102.20	76.00	Gustine	DPWD	NC	$55,952	**$4,800**
32	Madera	25-Jul-02	$300,000	63.03	18.70	Fairmead	MID	NC	$22,303	**$6,300**
33	Madera	08-Aug-02	$750,000	144.15	144.15	Madera	P/W	NC	$0	**$5,203**
34	Madera	13-Aug-02	$1,554,900	155.49	155.49	Madera	P/W	NC	$0	**$10,000**
35	Madera	13-Aug-02	$348,075	79.56	79.56	Madera	MID	NC	$0	**$4,375**
36	Merced	13-Aug-02	$7,350,000	1,076.40	1,076.40	Chowchilla	P/W	NC	$400,000	**$6,457**
37	Madera	19-Aug-02	$275,000	68.56	68.56		CWD	NC	$0	**$4,011**
38	Tulare	29-Aug-02	$875,000	96.57	96.57	Terra Bella	SID	NC	$0	**$9,679**
39	Kern	17-Sep-02	$24,400,000	2,617.95	2,153.00		NKWSD	NC	$0	**$10,167**
40	Kings	26-Sep-02	$4,903,000	3,187.26	1,007.00	Kettlemen City	DRWD	NC	$0	**$5,000**
41	Tulare	04-Oct-02	$3,810,356	310.00	310.00		DEID	NC	$0	**$10,158**
42	Fresno	11-Oct-02	$2,912,500	860.69	250.00		SLWD	NC	$0	**$6,664**
43	Tulare	30-Oct-02	$1,725,000	315.84	315.84	Earlimart		NC	$0	**$5,462**
44	Kern	01-Nov-02	$3,700,000	801.88	801.88		NKWSD	NC	$0	**$4,614**
45	Tulare	01-Nov-02	$595,000	78.38	78.38	Visalia	P/W	NC	$100,000	**$6,315**
46	Madera	05-Nov-02	$3,400,000	781.77	108.00	Madera	P/W	NC	$250,600	**$7,163**
47	Fresno	11-Nov-02	$425,000	54.36	54.36	Kerman	FID	NC	$0	**$7,818**
48	Madera	27-Nov-02	$1,105,000	315.22	152.40		P/W	NC	$0	**$4,508**
49	Fresno	24-Dec-02	$374,000	40.33	40.33	Kerman	FID	NC	$70,000	**$7,538**
50	Kern	27-Dec-02	$1,825,125	235.45	235.45	Shafter	SWID	NC	$0	**$7,632**
51	Tulare	27-Dec-02	$314,500	37.22	37.22	Visalia	P/W	NC	$0	**$8,448**
	TOTALS		**$109,913,156**	**20,741.57**	**14,161.82**				**$1,588,855**	**$6,496**

Minimum	$1,778
Maximum	$14,239
Mean	$6,496.50

Orchard Sales, 2002

#	County	Recorded Date	Price	Total Acres	Orchard Acres	Area	Irrigation District	Type	CV	Net $/Acre
1	Madera	Jan-03	$331,890	51.06	51.06	Chowchilla	CWD	NC	$0	**$6,500**
2	Madera	Jan-03	$600,000	73.8	73.8	Madera	MID	NC	$0	**$8,130**
3	Madera	Jan-03	$783,500	214.44	214.44		MID	NC	$0	**$3,653**
4	Kern	Jan-03	$899,000	159	159	Delano	SSJMUD	NC	$0	**$5,654**
5	Fresno	Jan-03	$360,000	119.88	97.3	Three Rocks	WWD	NC	$0	**$3,700**
6	Fresno	Jan-03	$210,000	40	40	Easton		NC	$18,900	**$4,778**
7	Fresno	Jan-03	$1,450,000	244.55	244.55	Sanger	KRID	NC	$75,000	**$5,622**
8	Kings	Jan-03	$480,000	80	80	Hanford	LID	NC	$120,000	**$4,500**
9	Merced	Jan-03	$293,000	38.02	38.02	Gustine	DPWD	NC	$0	**$4,813**
10	Madera	Feb-03	$148,000	38.5	38.5	Chowchilla	CWD	NC	$0	**$3,844**
11	Madera	Feb-03	$3,087,500	793.45	225		P/W	NC	$0	**$6,000**
12	Merced	Feb-03	$195,000	64.36	64.36	Gustine	DPWD	NC	$0	**$3,030**
13	Kern	Mar-03	$45,000	20	20		P/W	NC	$0	**$2,250**
14	Madera	Mar-03	$4,400,000	1919.04	1269	Chowchilla		NC	$0	**$3,000**
15	Kern	Apr-03	$610,000	149.12	99.5	Delano	SWSD	NC	$0	**$4,593**
16	Tulare	Apr-03	$540,000	66.91	66.91	Tulare	P/W	NC	$31,440	**$7,600**
17	Madera	Apr-03	$245,000	39.71	39.71	Madera	MID	NC	$0	**$6,170**
18	Kern	Apr-03	$885,000	156.56	156.56		SWSD	NC	$0	**$5,652**
19	Tulare	May-03	$217,500	30	30	Porterville	PID	NC	$0	**$7,250**
20	Madera	May-03	$400,000	80	80	Madera	MID	NC	$105,200	**$3,685**
21	Madera	May-03	$390,000	120.85	120.85	Madera		NC	$0	**$3,227**
22	Fresno	May-03	$195,000	38.88	38.88	Kerman	FID	NC	$0	**$5,015**
23	Madera	Jun-03	$785,000	101.81	101.81	Madera	MID	NC	$0	**$7,850**
24	Madera	Jun-03	$2,520,000	240	240	Madera Ranchos	P/W	NC	$0	**$10,500**
25	Madera	Jul-03	$450,000	74.92	74.92	Madera	MID	NC	$49,178	**$5,350**
26	Madera	Jul-03	$330,000	78.61	20	Chowchilla		NC	$0	**$6,000**
27	Madera	Jul-03	$1,496,410	175.46	175.46	Madera	P/W	NC	$0	**$8,529**
28	Kern	Jul-03	$1,010,000	162.52	162.52	Arvin	AEWSD	NC	$0	**$6,214**
29	Kern	Aug-03	$144,633	39.09	39.09		SWID	NC	$0	**$3,700**
30	Tulare	Aug-03	$490,000	239.68	239.68	Richgrove	KTWD	NC	$0	**$2,044**
31	Madera	Aug-03	$391,050	79.33	79.33	Madera	MID	NC	$0	**$4,929**
32	Fresno	Aug-03	$650,000	39.33	39.33	Kingsburg	P/W	NC	$334,680	**$8,017**
33	Fresno	Aug-03	$598,000	116.6	44.6	Kerman	FID	NC	$39,000	**$5,222**
34	Merced	Sep-03	$440,000	115.9	29	Livingston		NC	$0	**$5,000**
35	Madera	Sep-03	$180,000	30.67	26	Madera	P/W	NC	$0	**$6,397**
36	Madera	Sep-03	$2,395,000	136.18	68.78	Madera Ranchos	MID	NC	$0	**$15,109**
37	Madera	Sep-03	$4,929,000	614.91	614.91			NC	$0	**$8,015**
38	Madera	Oct-03	$120,000	18.96	18.96	Madera	P/W	NC	$0	**$6,329**
39	Madera	Oct-03	$280,000	39.71	39.71	Madera Ranchos	PMWC	NC	$0	**$7,051**
40	Fresno	Oct-03	$2,973,000	1174.32	180		WWD	NC	$0	**$3,926**
41	Madera	Oct-03	$1,175,000	166.59	95	Madera		NC	$9,550	**$8,500**
42	Kern	Nov-03	$744,000	119.09	119.09		KTWD	NC	$0	**$6,200**
43	Fresno	Nov-03	$245,000	35.6	35.6	Caruthers	CID	NC	$0	**$6,882**
44	Fresno	Dec-03	$4,200,000	844.43	695	Mendota	WWD	NC	$0	**$5,558**
45	Tulare	Dec-03	$765,000	78.64	78.64	Visalia	FWD	NC	$0	**$5,875**
46	Fresno	Dec-03	$6,725,570	2717.08	54	Huron	WWD	NC	$0	**$4,779**
47	Tulare	Dec-03	$2,435,500	200.41	200.41		P/W	NC	$0	**$12,153**
48	Tulare	Dec-03	$2,941,500	399.34	399.34		P/W	NC	$0	**$7,366**
49	Tulare	Dec-03	$2,023,500	320	320	Delano		NC	$0	**$6,323**
	TOTALS		**$58,202,553**	**12,897.31**	**7,438.62**				**$782,948**	**$5,767**

Minimum	$2,044
Maximum	$15,109
Mean	$5,767.31

Orchard Sales, 2003

#	County	Recorded Date	Price	Total Acres	Orchard Acres	Area	Irrigation District	Type	CV	Net $/Acre
1	Tulare	Jan-04	$1,350,000	160	160	Poplar		NC	$0	**$8,438**
2	Madera	Jan-04	$675,000	38.89	38.89			NC	$0	**$17,356**
3	Fresno	Jan-04	$1,800,000	472.81	234.06	Firebaugh	WWD	NC	$0	**$5,200**
4	Merced	Jan-04	$332,000	37.6	37.6	Winton	MID	NC	$0	**$8,830**
5	Madera	Jan-04	$995,000	155.2	155.2	Chowchilla	CWD	NC	$0	**$6,411**
6	Tulare	Feb-04	$167,500	20.62	20.62	Woodlake		NC	$0	**$8,123**
7	Kern	Feb-04	$4,050,000	521.84	471.34		NKWSD	NC	$0	**$8,190**
8	Madera	Feb-04	$1,454,000	318.8	277.3	Madera	P/W	NC	$0	**$5,082**
9	Kern	Feb-04	$1,040,000	314.7	314.7	Wasco	SID	NC	$0	**$3,368**
10	Tulare	Feb-04	$290,000	17.75	17.75	Visalia	TID	NC	$86,000	**$11,493**
11	Merced	Feb-04	$488,000	50.4	50.4	Livingston	P/W	NC	$0	**$9,683**
12	Kern	Feb-04	$1,260,000	317.43	75	Bakersfield	P/W	NC	$0	**$5,478**
13	Kings	Feb-04	$534,500	48.58	48.58	Hanford	pump/well	NC	$0	**$11,002**
14	Fresno	Feb-04	$2,080,000	259.52	259.52	Coalinga	WWD	NC	$0	**$8,015**
15	Fresno	Mar-04	$608,000	75.7	55.7	Easton	FID	NC	$0	**$8,796**
16	Madera	Mar-04	$438,000	150.01	150.01	Madera	MID	NC	$0	**$2,919**
17	Kern	Mar-04	$920,000	109.27	109.27	Pond	SSJMUD	NC	$55,000	**$7,916**
18	Madera	Apr-04	$244,000	39.01	39.01	Madera	MCWD	NC	$0	**$6,255**
19	Madera	Apr-04	$125,000	20.01	20.01	Madera		NC	$0	**$6,247**
20	Madera	Apr-04	$250,000	40.05	40.05	Madera		NC	$0	**$6,242**
21	Madera	Apr-04	$115,000	18.45	18.45	Madera		NC	$0	**$6,260**
22	Fresno	Apr-04	$684,000	119.88	119.88	Coalinga	WWD	NC	$0	**$5,705**
23	Fresno	Apr-04	$5,012,640	394.97	394.97		WWD	NC	$0	**$12,691**
24	Madera	Apr-04	$978,500	55.89	55.89	Chowchilla	CWD	NC	$145,150	**$15,000**
25	Kern	May-04	$837,500	197.03	197.03	McFarland	SSJMUD	NC	$0	**$4,251**
26	Merced	May-04	$908,500	79	79	Merced		NC	$0	**$10,500**
27	Madera	May-04	$125,000	19.46	19.46	Madera	MWD	NC	$0	**$6,423**
28	Madera	Jun-04	$385,000	79.56	79.56		MID	NC	$0	**$4,839**
29	Tulare	Jun-04	$624,000	78.1	78.1	Tulare	P/W	NC	$0	**$8,000**
30	Kern	Jun-04	$970,500	147.99	147.99	Bakersfield	CWD	NC	$10,000	**$6,490**
31	Madera	Jun-04	$350,000	38.94	38.94	Chowchilla	CWD	NC	$0	**$8,988**
32	Kern	Jun-04	$2,215,384	587.45	587.45			NC	$0	**$4,323**
33	Madera	Jun-04	$2,125,000	346.04	346.04	Chowchilla		NC	$0	**$6,140**
34	Madera	Jul-04	$265,000	58.54	29.27	Madera	P/W	NC	$0	**$4,526**
35	Kern	Jul-04	$1,695,000	430.64	430.64		WRMWSD	NC	$0	**$3,936**
36	Tulare	Jul-04	$457,680	38.14	38.14	Farmersville		NC	$72,320	**$12,000**
37	Madera	Jul-04	$620,960	77.62	77.62	Madera		NC	$15,524	**$7,800**
38	Madera	Jul-04	$300,000	33.23	33.23	Chowchilla	CWD	NC	$0	**$9,028**
39	Kern	Aug-04	$9,424,642	686.11	686.11		CWD	NC	$0	**$13,736**
40	Madera	Aug-04	$326,000	59.16	19.5	Madera	P/W	NC	$0	**$8,000**
41	Kern	Aug-04	$2,215,384	570	570	Wasco	SWID	NC	$0	**$3,886**
42	Madera	Sep-04	$1,010,000	101.81	101.81	Madera	MID	NC	$0	**$10,100**
43	Fresno	Sep-04	$945,000	148.4	108	Mendota	WWD	NC	$0	**$8,750**
44	Madera	Sep-04	$570,000	26.68	26.68	Chowchilla	CWD	NC	$223,160	**$13,000**
45	Madera	Oct-04	$1,010,000	101.81	101.81	Madera	MID	NC	$0	**$9,920**
46	Madera	Oct-04	$900,000	44.69	44.69	Madera	MID	NC	$400,000	**$10,189**
47	Madera	Nov-04	$1,232,000	160.72	160.72	Madera	P/W	NC	$0	**$7,666**
48	Kern	Dec-04	$450,000	49.52	49.52	Pond	SSJMUD	NC	$0	**$9,136**
49	Merced	Dec-04	$1,050,000	128.14	128.14	Le Grand	LGAWD	NC	$0	**$8,194**
50	Kings	Dec-04	$150,000	26.8	26.8	Riverdale	LID	NC	$0	**$5,597**
51	Madera	Dec-04	$850,000	79.98	79.98	Madera	MID	NC	$59,397	**$9,885**
	TOTALS		**$57,903,690**	**8,152.94**	**7,450.43**				**$1,066,551**	**$7,391.33**

Minimum	$2,919
Maximum	$17,356
Mean	$7,391.33

Orchard Sales, 2004

#	County	Recorded Date	Price	Total Acres	Orchard Acres	Area	Irrigation District	Type	BIs	CV	Net $/Acre
1	Kern	Jan-05	$1,290,000	197.03	197.03	McFarland	SSJMUD	NC	Improved	$0	**$6,547**
2	Fresno	Jan-05	$540,000	69.45	26	Kingsburg	CID	NC	Improved	$27,000	**$7,243**
3	Kern	Jan-05	$1,090,000	86.38	86.38		AEWSD	NC	None	$0	**$12,619**
4	Tulare	Feb-05	$3,000,000	406.15	163.62	Visalia	TID	NC	None	$0	**$7,386**
5	Kern	Jan-05	$640,000	40	40	McFarland	SSJMUD	NC	None	$0	**$16,000**
6	Madera	Feb-05	$175,000	25.25	25.25	Madera	MWD	NC	None	$0	**$6,931**
7	Madera	Feb-05	$540,000	39.49	39.49	Madera	MID	NC	None	$0	**$13,674**
8	Kern	Feb-05	$2,000,000	454.59	286.8	Wasco	STWSD	NC	Improved	$0	**$4,400**
9	Tulare	Feb-05	$634,000	40.58	40.58	Farmersville	P/W	NC	Improved	$150,000	**$11,927**
10	Fresno	Feb-05	$1,153,500	147.84	98.8	Selma	P/W	NC	Improved	$0	**$6,500**
11	Madera	Feb-05	$950,000	98.88	98.88	Madera	MID	NC	Improved	$0	**$9,608**
12	Madera	Feb-05	$1,729,200	228.25	228.25	Madera	MWD	NC	None	$0	**$7,576**
13	Fresno	Mar-05	$1,200,000	58.59	58.59	Sanger	KRWD	NC	None	$0	**$20,481**
14	Tulare	Mar-05	$1,960,000	244.65	244.65	Terra Bella	SID	NC	Improved	$0	**$8,000**
15	Fresno	Mar-05	$320,000	37.4	37.4	Selma	CID	NC	None	$0	**$8,556**
16	Tulare	Mar-05	$1,719,000	213.54	213.54	Pixley	PID	NC	Improved	$10,000	**$8,003**
17	Madera	Mar-05	$328,000	39.71	39.71	Madera	MWD	NC	None	$0	**$8,260**
18	Madera	Mar-05	$710,000	79.83	40	Chowchilla	CWD	NC	Improved	$70,935	**$10,500**
19	Madera	Mar-05	$751,000	77.9	77.9	Madera	MID	NC	None	$0	**$9,641**
20	Kern	Mar-05	$2,881,800	367.8	367.8	Pond	SSJMUD	NC	Improved	$0	**$8,074**
21	Fresno	Apr-05	$1,672,000	151.96	120.02	Selma	P/W	NC	Improved	$34,000	**$12,282**
22	Madera	Apr-05	$2,618,500	325.67	325.67	Chowchilla	MID	NC	None	$0	**$8,040**
23	Tulare	Apr-05	$2,300,000	238.95	215		TID	NC	None	$0	**$9,625**
24	Fresno	Apr-05	$440,000	33.42	33.42	Del Rey	CID	NC	Improved	$135,650	**$10,000**
25	Kings	Apr-05	$503,000	38.76	38.76	Kingsburg	KCWD	NC	Improved	$0	**$12,977**
26	Madera	Apr-05	$800,000	61.2	61.2	Chowchilla	CWD	NC	Improved	$65,600	**$12,240**
27	Kern	May-05	$3,200,000	320	320	McFarland	CWD	NC	None	$0	**$10,000**
28	Madera	May-05	$224,500	32.02	32.02	Madera	MWD	NC	None	$0	**$7,011**
29	Tulare	Jun-05	$900,000	79.27	39.53	Woodville	P/W	NC	None	$0	**$15,000**
30	Tulare	Jun-05	$700,000	38.72	33	Visalia	LCWD	NC	Improved	$200,000	**$12,913**
31	Kern	Jun-05	$558,600	39.49	39.49		SSJMWD	NC	None	$0	**$14,700**
32	Madera	Jun-05	$401,500	27.77	27.77	Madera	MID	NC	Improved	$0	**$14,458**
33	Madera	Jun-05	$316,000	37.87	37.87	Madera	MWD	NC	None	$0	**$8,344**
34	Madera	Jun-05	$332,500	42.45	42.45	Madera	MWD	NC	None	$0	**$7,833**
35	Fresno	Jun-05	$410,500	40	40	Kerman	FID	NC	Improved	$0	**$10,263**
36	Madera	Jun-05	$275,000	33.95	33.95	Madera	MWD	NC	None	$0	**$8,100**
37	Madera	Jul-05	$260,000	40.02	40.02		MWD	NC	None	$20,000	**$5,970**
38	Kern	Jul-05	$350,000	39.09	39.09	Shafter	SWID	NC	None	$0	**$8,954**
39	Merced	Aug-05	$2,100,000	87.4	87.4		MID	NC	Improved	$352,000	**$20,000**
40	Kern	Sep-05	$1,485,400	148.54	148.54	Wasco	SWSD	NC	None	$0	**$10,000**
41	Tulare	Aug-05	$385,000	56.62	56.62	Woodville	Well	NC	None	$0	**$6,800**
42	Fresno	Sep-05	$1,037,000	80	80	Cantua Creek	WWD	NC			**$12,963**
43	Madera	Sep-05	$550,000	75.65	37	Madera	MID	NC	Improved	$70,000	**$6,345**
44	Kern	Oct-05	$2,087,235	154.61	154.61		AEWSD	NC	None	$0	**$13,500**
45	Kern	Oct-05	$2,087,235	154.63	154.63	Arvin	P/W	NC	None	$0	**$13,498**
46	Madera	Oct-05	$780,000	77.89	40	Madera	P/W	NC	None	$0	**$11,000**
47	Fresno	Oct-05	$857,500	71.37	71.37	Raisin City	RCWD	NC	None	$0	**$12,015**
48	Kern	Oct-05	$2,187,000	161.65	161.65	Wasco	SWID	NC	None	$0	**$13,529**
49	Tulare	Oct-05	$1,200,000	113.16	113.16	Earlimart	DEID	NC	None	$0	**$10,604**
50	Madera	Oct-05	$440,375	35.23	35.23	Chowchilla	CWD	NC	None	$0	**$12,500**
51	Madera	Oct-05	$435,000	36.56	36.56	Chowchilla	P/W	NC	None	$0	**$11,898**
52	Fresno	Nov-05	$540,000	60	60	Firebaugh	SLWD	NC	None	$0	**$9,000**

#	County	Recorded Date	Price	Total Acres	Orchard Acres	Area	Irrigation District	Type	BIs	CV	Net $/Acre
53	Madera	Nov-05	$1,220,000	155.16	114	Madera	MID	NC	None	$0	**$7,863**
54	Tulare	Dec-05	$1,200,000	80	80	Delano	DEID	NC	Improved	$0	**$15,000**
55	Madera	Dec-05	$1,309,000	154.13	40	Madera		NC	Improved	$40,000	**$14,000**
56	Merced	Dec-05	$962,500	59	59		CCID	NC	Improved	$18,500	**$16,000**
57	Tulare	Dec-05	$495,000	56.62	35.62	Woodville	Well	NC	None	$0	**$8,742**
	TOTALS		**$61,231,845**	**6,392.14**	**5,495.32**					**$1,193,685**	**$9,831**

Minimum	$4,400
Maximum	$20,481
Mean	$9,831.41

#	County	Recorded Date	Price	Total Acres	Orchard Acres	Area	Irrigation District	Type	CV	Net $/Acre
1	Madera	Jan-06	$5,000,000	397.73	397.73	Chowchilla	CWD	NC	$15,000	**$12,533**
2	Fresno	Jan-06	$6,000,000	453.16	453.16	Helm	P/W	NC	$0	**$13,240**
3	Madera	Feb-06	$3,100,000	310.8	310.8	Madera	MWD	NC	$0	**$9,974**
4	Merced	Feb-06	$305,000	31.2	31.2	Atwater	MID	NC	$0	**$9,775**
5	Madera	Feb-06	$720,000	80	80	Madera		NC	$0	**$9,000**
6	Tulare	Feb-06	$682,500	36	36	Exeter	Well	NC	$0	**$18,958**
7	Fresno	Feb-06	$540,000	60	60	Firebaugh	SLWD	NC	$0	**$9,000**
8	Fresno	Feb-06	$1,000,000	81.56	60	Caruthers	RCWD	NC	$0	**$13,348**
9	Tulare	Mar-06	$2,450,000	213.54	213.54	Pixley	PID	NC	$10,000	**$11,844**
10	Fresno	Mar-06	$4,500,000	640	160	Huron	WWD	NC	$0	**$12,294**
11	Madera	Mar-06	$1,420,000	100.46	100.46	Chowchilla	MID	NC	$300,000	**$11,149**
12	Fresno	Mar-06	$7,200,000	420.74	400	Firebaugh	SLWD	NC	$0	**$18,000**
13	Fresno	Apr-06	$628,000	49.25	49.25	Fresno	P/W	NC	$0	**$12,751**
14	Madera	Apr-06	$479,000	19.62	19.62	Chowchilla	CWD	NC	$80,000	**$20,336**
15	Fresno	May-06	$1,200,000	35.17	35.17	Sanger	FID	NC	$200,000	**$28,571**
16	Madera	Jun-06	$2,300,000	175.46	175.46	Madera	P/W	NC	$0	**$13,108**
	TOTALS		**$37,524,500**	**3,104.69**	**2,582.39**				**$605,000**	**$13,275**

Minimum	$9,000
Maximum	$28,571
Mean	$13,274.84

Orchard Sales, 2006

Exhibit "C"
Vineyard Sales

#	County	Recorded Date	Price	Total Acres	Vineyard Acres	Area	Irrigation District	Type	CV	Net $/Acre
1	Fresno	Jan-02	$250,000	35.64	17	Fowler	CID	TS	$0	$7,015
2	Fresno	Jan-02	$825,000	110.46	110.46	Laton		TG	$0	$7,469
3	Fresno	Jan-02	$240,000	40	40	Selma	CID	TS	$40,000	$5,000
4	Fresno	Jan-02	$160,000	19.1	19.1	Selma	CID	TS	$0	$8,377
5	Fresno	Jan-02	$600,000	90.07	45	Reedley	CID	TS	$59,580	$6,000
6	Tulare	Jan-02	$530,000	63.96	40.72	Exeter	P/W	TG	$0	$8,619
7	Fresno	Jan-02	$850,000	149.2	149.2	Biola	FID	TS	$35,000	$5,462
8	Madera	Jan-02	$545,000	158.54	158.54	Madera	P/W	WG	$0	$3,438
9	Fresno	Feb-02	$470,000	85.71	85.71	Kerman	P/W	TS	$135,000	$3,909
10	Tulare	Feb-02	$6,200,000	836.93	106	Tulare	TID	WG	$0	$6,485
11	Fresno	Feb-02	$270,000	30	30	Kingsburg	CID	TS	$115,500	$5,150
12	Fresno	Feb-02	$160,000	40	40	Del Rey	CID	TS	$0	$4,000
13	Fresno	Feb-02	$80,000	12.38	12.38	Selma	P/W	TS	$0	$6,462
14	Fresno	Feb-02	$265,000	39	22.25	Kerman	FID	TS	$14,125	$5,230
15	Fresno	Feb-02	$315,000	60.24	60.24	Kerman	P/W	TS	$0	$5,064
16	Fresno	Feb-02	$135,000	36.7	36.7	Selma	CID	TS	$0	$3,678
17	Fresno	Feb-02	$1,000,000	200.91	111	Caruthers	P/W	TS	$50,000	$4,728
18	Fresno	Mar-02	$700,000	98.8	98.8	Caruthers	RCWD	TS	$50,000	$6,578
19	Fresno	Mar-02	$175,000	20	20			TS	$0	$8,750
20	Tulare	Mar-02	$250,000	78.49	57	Earlimart	P/W	TG	$0	$3,632
21	Fresno	Mar-02	$155,000	20	20	Kerman	FID	TS	$40,000	$5,750
22	Fresno	Mar-02	$180,000	18.65	18.65	Selma	CID	TS	$0	$9,651
23	Kern	Mar-02	$940,000	394.83	231.81	McFarland	CWD/SJMUD	TG	$0	$2,656
24	Fresno	Mar-02	$214,500	38.8	38.8	Raisin City	FID	TS	$35,000	$3,051
25	Fresno	Apr-02	$600,000	39.55	39.55	Selma	CID	TG	$0	$15,171
26	Fresno	Apr-02	$91,000	17.24	17.24	Easton	FID	TS	$0	$5,278
27	Fresno	Apr-02	$600,000	39.55	39.55	Selma	CID	TS	$0	$15,171
28	Fresno	Apr-02	$1,134,345	241.35	241.35	Kingsburg	P/W	TS	$0	$4,700
29	Fresno	Apr-02	$154,000	29.61	29.61	Kingsburg	CID	TS	$3,000	$5,100
30	Fresno	Apr-02	$134,000	18.5	18.5	Fowler	CID	TS	$15,000	$5,081
31	Fresno	Apr-02	$210,000	40	40	Caruthers	CID	TS	$0	$5,250
32	Fresno	Apr-02	$210,000	40	40	Caruthers	CID	TS	$0	$5,250
33	Tulare	Apr-02	$218,000	80	60	Earlimart	DEID	TG	$0	$2,725
34	Fresno	Apr-02	$235,000	20	20	Kingsburg	CID	TS	$100,000	$6,750
35	Fresno	Apr-02	$935,000	171.45	120		CID	TS	$100,000	$5,162
36	Fresno	Apr-02	$286,000	52	52	Sanger	KRWD	WG	$0	$5,500
37	Fresno	Apr-02	$318,200	40	40	Kerman	FID	TS	$116,075	$5,053
38	Kern	Apr-02	$2,400,000	483.93	369.65		AEWSD	TG	$0	$4,787
39	Fresno	May-02	$2,000,000	637.37	473.2	Mendota	WWD	WG	$0	$3,477
40	Fresno	May-02	$2,540,000	634.96	40	Raisin City	RCWD	WG	$0	$4,000
41	Tulare	May-02	$250,000	80.06	60	Ducor	P/W	TS	$0	$3,123
42	Fresno	May-02	$236,000	46.11	46.11	Rolinda	FID	TS	$89,000	$5,118
43	Fresno	May-02	$220,000	39	39	Del Rey	CID	TS	$20,000	$5,128
44	Fresno	May-02	$752,000	158.79	149	Selma	CID	TS	$69,000	$4,301
45	Fresno	May-02	$123,000	17.66	17.66	Easton	CID	TS	$17,500	$5,974
46	Fresno	May-02	$3,300,000	777.29	777.29	Fresno	FID	WG	$0	$4,246
47	Madera	Jun-02	$540,000	153.91	147	Madera	MID	TS	$41,600	$3,238
48	Fresno	Jun-02	$179,500	18.41	18.41	Kingsburg	CID	TS	$40,000	$6,762
49	Fresno	Jun-02	$127,000	20	20	Selma	CID	TS	$0	$6,350
50	Fresno	Jun-02	$400,000	74.74	71	Kerman	FID	TS	$57,800	$4,673
51	Fresno	Jun-02	$195,000	20	20	Kerman	FID	TS	$75,000	$6,000
52	Fresno	Jun-02	$95,000	19.66	19.66	Fowler	FID	TS	$35,000	$3,051
53	Fresno	Jun-02	$280,000	20	20	Del Rey		TS	$0	$14,000
54	Fresno	Jul-02	$225,000	19.75	19.75	Selma	CID	TS	$0	$11,392
55	Madera	Jul-02	$657,000	29.08	29.08	Madera		TS	$0	$22,593

Vineyard Sales, 2002

#	County	Recorded Date	Price	Total Acres	Vineyard Acres	Area	Irrigation District	Type	CV	Net $/Acre
56	Fresno	Jul-02	$335,000	40	40	Caruthers	CID	TS	$35,000	$7,500
57	Kern	Jul-02	$969,500	156.36	156.36		AEWSD	TG	$0	$6,200
58	Madera	Jul-02	$300,000	63.03	26.7	Fairmead	MID	TS	$22,303	$3,500
59	Tulare	Jul-02	$154,000	18.14	12.75	Kingsburg	AID	TS	$0	$8,489
60	Fresno	Aug-02	$160,000	18.27	18.27	Biola	FID	TS	$0	$8,758
61	Fresno	Aug-02	$156,000	20	20	Kerman	FID	TS	$25,015	$6,549
62	Merced	Aug-02	$1,775,000	710.9	710.9	Chowchilla	CWD	WG	$0	$2,497
63	Tulare	Sep-02	$300,000	77.26	77.26	Cutler	AID	WG	$0	$3,883
64	Madera	Sep-02	$680,000	151.68	151.68	Madera		TS	$10,000	$4,417
65	Fresno	Sep-02	$206,500	18.85	18.85	Kingsburg	CID	TS	$55,106	$8,031
66	Kings	Sep-02	$4,903,000	3187.26	96	Kettlemen City	DRWD	WG	$0	$4,000
67	Fresno	Sep-02	$345,000	19.39	19.39	Kerman	FID	TS	$248,000	$5,002
68	Fresno	Oct-02	$175,000	19.4	19.4	Kingsburg	CID	TS	$10,000	$8,505
69	Fresno	Oct-02	$163,000	21.57	21.57	Biola	FID	TS	$40,565	$5,676
70	Fresno	Oct-02	$285,000	47.5	47.5	Easton	FID	TS	$0	$6,000
71	Fresno	Oct-02	$305,000	47.37	47.37	Fresno	FID	TS	$0	$6,439
72	Kern	Nov-02	$3,700,000	801.88	619.72		NKWSD	TG	$0	$4,173
73	Tulare	Nov-02	$1,200,000	192.7	148	Dinuba	AID	WG	$0	$6,228
74	Tulare	Nov-02	$960,000	159.9	159.9	Dinuba	AID	WG	$0	$6,004
75	Madera	Nov-02	$1,105,000	315.22	151.9		P/W	WG	$0	$2,500
76	Fresno	Dec-02	$145,000	18.59	18.59	Caruthers	FID	TS	$25,344	$6,542
77	Madera	Dec-02	$190,000	73.15	73.15	Madera	MID	WG	$0	$2,597
78	Fresno	Dec-02	$350,000	89.99	89.99	Raisin City	RCWD	WG	$30,000	$3,556
79	Fresno	Dec-02	$285,000	15.86	15.86		FID	TS	$35,000	$15,763
80	Fresno	Dec-02	$140,000	20	20	Kerman	FID	TS	$10,000	$6,500
81	Fresno	Dec-02	$3,420,000	810.9	777.7	Fresno	FID	WG	$0	$4,218
82	Madera	Dec-02	$220,000	39.7	39.7	Madera	MID	TS	$44,000	$4,433
83	Fresno	Dec-02	$135,000	20	20	Sanger	FID	TG	$0	$6,750
84	Fresno	Dec-02	$175,500	39	39	Selma	CID	TS	$0	$4,500
85	Fresno	Dec-02	$370,000	38.6	38.6	Kerman	FID	TS	$0	$9,585
	TOTALS		**$58,762,045**	**14,010.85**	**8,360.08**				**$1,943,513**	**$4,665**

Min	$2,497
Max	$22,593
Mean	$4,665.04

Vineyard Sales, 2002

#	County	Recorded Date	Price	Total Acres	Vineyard Acres	Area	Irrigation District	Type	CV	Net $/Acre
1	Fresno	Jan-03	$800,000	155.8	148	Selma	CID	TS	$0	$5,776
2	Fresno	Jan-03	$935,000	157.59	157.59	Kingsburg	P/W	TS	$0	$5,933
3	Madera	Jan-03	$360,000	78.15	78.15	Madera	MID	TS	$45,000	$4,104
4	Fresno	Jan-03	$252,000	55	20	Fresno	FID	WG	$0	$4,737
5	Fresno	Jan-03	$145,000	20	20	Kerman	FID	TS	$17,925	$6,354
6	Fresno	Jan-03	$95,000	20	20	Caruthers	CID	TS	$0	$4,750
7	Fresno	Jan-03	$225,000	38.68	38.68	Kerman	FID	TS	$24,600	$5,181
8	Kern	Jan-03	$240,000	39.07	39.07		DEID	TG	$0	$6,143
9	Fresno	Jan-03	$100,000	36.21	10.32	Caruthers	CID	TS	$0	$2,761
10	Fresno	Jan-03	$95,000	19.61	19.61	Raisin City	FID	TS	$0	$4,844
11	Fresno	Jan-03	$1,408,000	406.38	292	Del Rey	CID	TS	$0	$3,465
12	Fresno	Feb-03	$210,000	40	40	Fresno	FID	TS	$0	$5,250
13	Fresno	Feb-03	$731,000	76.39	76.39	Fresno	FID	TS	$140,000	$7,736
14	Fresno	Feb-03	$425,000	52.03	52.03	Biola	FID	TS	$16,000	$7,861
15	Fresno	Feb-03	$200,000	40	40	Biola	FID	TS	$40,000	$4,800
16	Fresno	Feb-03	$190,000	39.02	39.02	Easton	CID	TS	$0	$4,869
17	Fresno	Feb-03	$85,000	17.94	17.94	Selma	CID	TS	$0	$4,738
18	Madera	Feb-03	$270,000	153.98	143	Madera	MID	WG	$20,000	$1,633
19	Tulare	Feb-03	$1,675,000	360	96.48	Terra Bella	P/W	TG	$0	$10,686
20	Fresno	Feb-03	$200,000	18	18	Fresno	FID	TS	$80,000	$6,315
21	Tulare	Feb-03	$250,000	75.67	65	Orosi	OCID	TS	$0	$3,304
22	Madera	Mar-03	$1,700,000	163.76	153.09	Madera	MID	TG	$28,000	$10,210
23	Fresno	Mar-03	$257,500	50	50	Selma	CID	TS	$15,000	$4,850
24	Madera	Mar-03	$1,460,000	167.67	167.67		P/W	TS	$0	$8,708
25	Fresno	Mar-03	$180,000	42	42	Caruthers	CID	TS	$0	$4,286
26	Fresno	Mar-03	$205,000	37.04	37.04	Caruthers	LWD	TS	$0	$5,535
27	Fresno	Mar-03	$250,000	78.64	72	Caruthers	RCWD	WG	$0	$3,179
28	Kings	Mar-03	$600,000	90	23	Kingsbug	KCWD	TG	$0	$6,667
29	Madera	Mar-03	$202,500	68.7	53.51	Madera	MID	WG	$0	$2,948
30	Fresno	Mar-03	$200,000	40	40	Fresno	FID	TS	$0	$5,000
31	Fresno	Mar-03	$200,000	39	39	Caruthers	CID	TS	$5,000	$5,000
32	Tulare/Kings	Mar-03	$4,633,000	607.3	371	Goshen	P/W	TG	$0	$8,253
33	Madera	Mar-03	$165,000	28	28	Madera	MID	TS	$20,000	$5,178
34	Madera	Mar-03	$225,000	19.55	19.55	Madera	MID	TS	$108,000	$5,694
35	Fresno	Apr-03	$155,500	19.77	19.77	Easton	FID	TS	$51,720	$5,249
36	Fresno	Apr-03	$80,000	20	20	Parlier	CID	TS	$0	$4,000
37	Fresno	Apr-03	$792,000	224.53	224.53	Del Rey	CID	TS	$0	$3,527
38	Fresno	Apr-03	$738,640	194.45	75	Sanger	CID	TS	$0	$3,799
39	Fresno	Apr-03	$100,000	21.15	12.74	Sanger	CID	TS	$0	$4,728
40	Fresno	Apr-03	$85,000	16.49	10.2	Del Rey	CID	TS	$7,500	$4,700
41	Fresno	Apr-03	$220,620	36.77	36.77	Fowler	FID	TS	$0	$6,000
42	Madera	Apr-03	$1,250,000	229.63	80	Madera	MID	WG	$175,000	$3,500
43	Fresno	Apr-03	$150,000	18.51	18.51	Fowler	CID	TS	$0	$8,103
44	Fresno	Apr-03	$250,000	38.49	38.49	Kerman	FID	TS	$35,000	$5,586
45	Fresno	Apr-03	$305,000	64.35	64.35	Kerman	FID	TS	$0	$5,050
46	Fresno	Apr-03	$555,000	92.03	92.03	Kerman	FID	TS	$94,850	$5,000
47	Fresno	Apr-03	$185,000	30	30	Fowler	FID	TS	$0	$6,000
48	Merced	Apr-03	$845,000	281.5	130	Los Banos	SLWD	WG	$0	$3,700
49	Fresno	Apr-03	$290,000	40	40	Sanger	FID	TS	$0	$7,250
50	Fresno	Apr-03	$208,500	37.21	37.21	Selma	CID	TS	$0	$5,603
51	Fresno	Apr-03	$618,000	119.95	119.95	Kerman	FID	WG	$0	$5,152
52	Madera	May-03	$1,575,000	280.3	280.3	Madera Ranchos	P/W	WG	$0	$5,660
53	Fresno	May-03	$140,000	19.7	19.7	Kerman	FID	TS	$31,800	$6,254
54	Madera	May-03	$680,000	148.99	148.99	Madera	MID	WG	$107,000	$3,846
55	Fresno	May-03	$120,000	20	20	Easton	FID	TS	$0	$6,000
56	Fresno	May-03	$260,000	40	40	Caruthers	CID	TS	$28,000	$5,800
57	Fresno	May-03	$119,000	20	20	Kerman	FID	TS	$0	$5,950
58	Fresno	May-03	$141,000	20	20	Kerman	FID	TS	$15,000	$6,300
59	Tulare	May-03	$352,000	160	80	Ducor	P/W	TG	$0	$2,200
60	Fresno	May-03	$138,000	19.7	19.7	Kerman	FID	TS	$19,800	$6,000

Vineyards Sales, 2003

#	County	Recorded Date	Price	Total Acres	Vineyard Acres	Area	Irrigation District	Type	CV	Net $/Acre
61	Fresno	May-03	$200,000	25.62	25.62	Easton	FID	TS	$44,200	$6,081
62	Fresno	May-03	$200,000	40	40	Fresno	FID	TS	$0	$5,000
63	Madera	May-03	$265,000	79.25	79.25	Madera	P/W	WG	$15,000	$3,155
64	Fresno	Jun-03	$165,000	37.63	37.63	Raisin City	CID	TS	$10,800	$4,098
65	Fresno	Jun-03	$305,000	20	20	Fresno	FID	TS	$205,000	$5,000
66	Fresno	Jun-03	$120,000	21.42	21.42	Fowler	CID	TS	$0	$5,602
67	Madera	Jun-03	$222,000	22.7	22.7	Madera	MID	TS	$100,000	$5,374
68	Fresno	Jun-03	$240,000	38.5	38.5		FID	TS	$25,000	$5,948
69	Fresno	Jun-03	$290,000	56.13	56.13	Fowler	CID	TS	$9,350	$5,000
70	Fresno	Jun-03	$260,000	22.69	22.69	Dinuba	CID	TS	$0	$11,459
71	Fresno	Jun-03	$285,000	60	60	Sanger	CID	TS	$48,000	$4,065
72	Fresno	Jun-03	$255,000	39.09	39.09	Malaga	FID	TS	$30,900	$5,732
73	Fresno	Jun-03	$320,000	17.24	17.24	Kerman	FID	TS	$200,000	$6,961
74	Fresno	Jun-03	$250,000	71.44	71.44	Sanger	FID	TS	$0	$3,499
75	Fresno	Jun-03	$335,000	74.77	74.77	Selma	CID	TS	$152,706	$3,143
76	Fresno	Jun-03	$120,000	19.55	19.55	Sanger	CID	TS	$0	$6,445
77	Fresno	Jun-03	$300,000	58.21	58.21	Sanger	FID	TS	$0	$5,154
78	Fresno	Jul-03	$338,600	34.56	34.56	Fresno	FID	TS	$141,089	$5,715
79	Fresno	Jul-03	$339,000	34.57	34.57	Sanger		TS	$50,000	$8,348
80	Fresno	Jul-03	$740,000	135.54	135.54	Raisin City	RCID	TS	$145,600	$4,385
81	Fresno	Jul-03	$210,000	40	40	Fresno	CID	TS	$50,000	$4,000
82	Fresno	Jul-03	$360,000	19.71	19.71	Fresno	FID	TS	$260,000	$5,074
83	Kings	Jul-03	$703,000	74.99	15	Kingsburg	P/W	TG	$0	$9,375
84	Fresno	Jul-03	$280,000	37.75	37.75	Fresno	FID	TS	$0	$7,417
85	Fresno	Aug-03	$130,000	19.92	19.92	Reedley	AID	TG	$0	$6,526
86	Madera	Aug-03	$486,000	77.6	63.57	Madera	MID	WG	$200,000	$3,713
87	Fresno	Aug-03	$598,000	116.6	64.8	Kerman	FID	WG	$39,000	$4,500
88	Fresno	Aug-03	$200,000	39	39	Caruthers	P/W	TS	$35,000	$4,231
89	Fresno	Sep-03	$165,000	20	20	Selma	CID	TS	$0	$8,250
90	Madera	Sep-03	$110,000	18.44	18.44	Madera	MID	TS	$25,000	$4,610
91	Fresno	Sep-03	$165,000	30	30	Fowler	FID	TS	$0	$5,500
92	Fresno	Sep-03	$186,000	33.7	33.7	Kerman	FID	TS	$0	$5,519
93	Merced	Oct-03	$1,350,000	440.8	413	Merced	P/W	WG	$190,000	$2,632
94	Madera	Oct-03	$6,000,000	2158.84	2028.68	Madera Ranchos	P/W	WG	$60,000	$2,751
95	Fresno	Oct-03	$147,000	22.76	22.76	Easton	FID	TS	$9,000	$5,756
96	Fresno	Oct-03	$165,000	18.61	18.61	Kerman	FID	TS	$0	$8,866
97	Fresno	Oct-03	$175,000	35.16	35.16	Del Rey	CID	TS	$0	$4,977
98	Madera	Oct-03	$1,175,000	166.59	65	Madera		TS	$9,550	$5,000
99	Madera	Oct-03	$160,000	39.4	39.4	Madera	MID	TS	$0	$4,061
100	Fresno	Nov-03	$215,000	48.66	48.66	Caruthers	CID	TS	$0	$4,418
101	Fresno	Nov-03	$130,000	19.86	19.86	Selma	CID	TS	$0	$6,546
102	Fresno	Nov-03	$165,000	20	20	Sanger	CID	TS	$39,000	$6,445
103	Fresno	Nov-03	$293,000	58.6	58.6	Del Rey	CID	TS	$0	$5,000
104	Fresno	Nov-03	$293,250	39.09	39.09	Selma	CID	TS	$90,000	$5,200
105	Madera	Nov-03	$750,000	154.41	154.41	Madera	MID	TS	$0	$4,857
106	Fresno	Dec-03	$164,250	36.59	36.59	Selma	CID	TS	$0	$4,489
107	Fresno	Dec-03	$2,030,000	1271.26	365		WWD	TS	$0	$2,500
108	Fresno	Dec-03	$200,000	37.9	37.9	Selma	CID	TS	$10,000	$4,750
109	Fresno	Dec-03	$260,000	18.61	18.61		FID	TS	$120,000	$7,523
110	Tulare	Dec-03	$240,000	30	30	Dinuba	AID	TG	$0	$8,000
111	Tulare	Dec-03	$1,275,000	440	440	Earlimart	DEID	TS	$0	$2,897
	TOTALS		**$53,852,360**	**12,038.46**	**9,427.51**				**$3,439,390**	**$4,451**

Min	$1,633
Max	$11,459
Mean	$4,450.74

Vineyards Sales, 2003

#	County	Recorded Date	Price	Total Acres	Vineyard Acres	Area	Irrigation District	Type	CV	Net $/Acre
1	Madera	Jan-04	$700,000	77.74	77.74	Madera	MID	TS	$231,276	$6,029
2	Fresno	Jan-04	$225,000	40.58	40.58	Caruthers	CID	TS	$0	$5,545
3	Fresno	Jan-04	$245,000	30	30	Selma	CID	TS	$0	$8,167
4	Fresno	Jan-04	$325,910	50.14	50.14	Easton	FID	TS	$0	$6,500
5	Madera	Jan-04	$418,000	97.74	40	Chowchilla	MID	TS	$40,400	$3,200
6	Tulare	Feb-04	$720,000	120	93		DEID	TG	$0	$6,189
7	Fresno	Feb-04	$100,000	19.99	19.99	Fowler	FID	TS	$0	$5,002
8	Fresno	Feb-04	$190,000	42.67	42.67	Caruthers		TS	$0	$4,452
9	Fresno	Feb-04	$485,000	19.58	19.58	Laton	LID	TG	$375,000	$5,626
10	Fresno	Feb-04	$180,000	20	20	Caruthers	CID	TS	$7,000	$8,650
11	Fresno	Feb-04	$109,000	19.7	19.7	Selma	CID	TS	$0	$5,530
12	Madera	Feb-04	$1,706,850	379.3	379.3	Madera	MID	WG	$0	$4,500
13	Fresno	Feb-04	$210,000	39.6	20.8	Parlier		TS	$32,000	$4,000
14	Fresno	Mar-04	$810,000	229.17	229.17	Kerman	P/W	TS	$0	$3,537
15	Fresno	Mar-04	$608,000	75.7	20	Easton	FID	WG	$0	$6,000
16	Fresno	Mar-04	$160,000	20	20	Selma	CID	TS	$31,960	$6,402
17	Fresno	Mar-04	$119,000	20	13	Easton	FID	TS	$15,000	$5,308
18	Fresno	Mar-04	$160,000	27.11	27.11	Raisin City	P/W	TS	$0	$5,902
19	Fresno	Mar-04	$420,000	60	60	Fowler	CID	TS	$126,000	$4,900
20	Madera	Mar-04	$1,726,000	287.64	190	Madera		TS	$0	$6,515
21	Fresno	Mar-04	$1,015,000	29.09	29.09	Sanger		TS	$0	$34,892
22	Fresno	Mar-04	$660,000	106.76	70	Easton	FID	TS	$0	$6,548
23	Fresno	Mar-04	$181,631	34.27	34.27	Kingsburg	CID	TS	$0	$5,300
24	Fresno	Mar-04	$162,000	20	20	Del Rey	CID	TS	$39,000	$6,150
25	Fresno	Apr-04	$190,000	20	20	Selma	CID	TS	$5,000	$9,250
26	Madera	Apr-04	$1,600,000	239.05	57	Madera	MID	TG	$153,775	$11,000
27	Madera	Apr-04	$235,000	48.02	48.02		MID	TS	$15,000	$4,581
28	Fresno	Apr-04	$155,000	14.25	14.25	Easton	FID	TS	$0	$10,877
29	Tulare	Apr-04	$678,000	159.33	159.33	Terra Bella		TG	$0	$4,255
30	Fresno	Apr-04	$187,500	20	20	Easton	FID	TS	$0	$9,375
31	Madera	Apr-04	$156,360	39.09	39.09	Madera	MID	TS	$0	$4,000
32	Fresno	Apr-04	$175,000	35.16	35.16	Del Rey	CID	TS	$0	$4,977
33	Madera	Apr-04	$438,000	75.98	75.98	Madera	MID	TS	$30,000	$5,370
34	Madera	Apr-04	$413,000	75.99	75.99	Madera	MID	TS	$61,000	$4,632
35	Fresno	Apr-04	$277,500	18.04	18.04	Easton	FID	TS	$97,100	$10,000
36	Kern	Apr-04	$2,200,000	290.39	290.39	McFarland	SSJMUD	TG	$0	$7,576
37	Fresno	Apr-04	$135,000	20	20	Selma	CID	TS	$7,925	$6,354
38	Madera	May-04	$190,000	36.83	36.83	Madera	MID	TS	$0	$5,159
39	Fresno	May-04	$145,000	11.74	11.74	Easton	FID	TS	$0	$12,351
40	Fresno	May-04	$980,000	160	160	Raisin City	P/W	TG	$60,000	$5,750
41	Tulare	May-04	$1,100,000	340	198	Earlimart	DEID	TG	$100,000	$2,941
42	Fresno	May-04	$782,000	19.55	19.55	Sanger		TS	$0	$40,000
43	Madera	May-04	$290,000	28.38	28.38			TS	$0	$10,218
44	Fresno	May-04	$200,000	19.74	19.74	Fresno	FID	TS	$0	$10,132
45	Fresno	May-04	$597,500	14.93	14.93	Sanger		TS	$0	$40,000
46	Fresno	May-04	$1,484,409	37.08	37.08	Sanger		TS	$0	$40,008
47	Fresno	May-04	$250,000	18.65	18.65	Caruthers		TS	$60,000	$10,188
48	Fresno	Jun-04	$1,652,000	41.3	41.3	Sanger		TS	$0	$40,000
49	Fresno	Jun-04	$240,000	40	40		CID	TS	$60,000	$4,500
50	Fresno	Jun-04	$190,000	36.9	36.9	Selma	CID	TS	$0	$5,149
51	Fresno	Jun-04	$548,000	34.25	34.25		FID	TS	$0	$16,000
52	Fresno	Jun-04	$240,000	40	40	Caruthers	CID	TS	$63,000	$4,425
53	Fresno	Jun-04	$422,500	65	53	Del Rey	CID	TS	$0	$6,500
54	Fresno	Jun-04	$240,000	38.8	38.8		CID	TS	$30,000	$5,412
55	Fresno	Jun-04	$1,560,000	280	280	Raisin City		TS	$0	$5,571
56	Fresno	Jun-04	$586,000	69.62	69.62		None	TS	$0	$8,417
57	Madera	Jun-04	$680,000	38.98	38.98	Madera	MID	TS	$426,630	$6,500

Vineyard Sales, 2004

#	County	Recorded Date	Price	Total Acres	Vineyard Acres	Area	Irrigation District	Type	CV	Net $/Acre
58	Tulare	Jun-04	$150,000	19.51	19.51	Sultana		TG	$0	$7,688
59	Madera	Jun-04	$275,000	38.79	38.79	Madera	MID	TS	$50,000	$5,800
60	Kern	Jun-04	$280,139	58.48	58.48		SWID	TS	$0	$4,790
61	Fresno	Jun-04	$869,500	98.18	98.18	Selma		TS	$0	$8,856
62	Fresno	Jun-04	$200,000	48.77	48.77	Caruthers	P/W	TS	$0	$4,100
63	Fresno	Jun-04	$205,239	47.73	47.73	Selma	CID	TS	$0	$4,300
64	Fresno	Jun-04	$323,000	38.7	38.7	Easton		TS	$25,000	$7,700
65	Fresno	Jun-04	$2,100,000	667.16	474	Mendota	FWD	TG	$0	$3,148
66	Madera	Jun-04	$2,000,000	161.74	161.74	Madera	MID	TS	$0	$12,366
67	Fresno	Jun-04	$795,000	23.96	23.96	Sanger		TS	$0	$33,180
68	Madera	Jun-04	$525,000	78.4	15.87	Madera	MID	TG	$155,240	$4,000
69	Fresno	Jul-04	$400,000	79.1	21	Caruthers	CID	TG	$34,700	$5,500
70	Fresno	Jul-04	$450,000	72.49	72.49	Caruthers	CID	TS	$50,000	$5,518
71	Fresno	Jul-04	$245,000	29.55	29.55	Caruthers	P/W	TG	$3,695	$8,166
72	Fresno	Jul-04	$470,000	80	80	Selma	CID	TS	$0	$5,875
73	Fresno	Jul-04	$470,000	80	80	Fresno	CID	TS	$0	$5,875
74	Fresno	Jul-04	$500,000	39	39	Fresno		TS	$165,760	$8,570
75	Fresno	Jul-04	$450,000	80	80	Del Rey	CID	TS	$0	$5,625
76	Madera	Jul-04	$140,000	18.79	18.79	Madera		TS	$0	$7,451
77	Madera	Jul-04	$550,000	59.55	59.55	Madera	MID	TS	$192,700	$6,000
78	Fresno	Jul-04	$1,040,000	118.53	118.53	Caruthers	CID	TS	$120,000	$7,762
79	Fresno	Jul-04	$320,000	40	40	Fresno	FID	TS	$0	$8,000
80	Fresno	Aug-04	$220,000	17.47	17.47	Easton	FID	TS	$40,000	$10,303
81	Tulare	Aug-04	$318,000	78.05	78.05	Earlimart	DEID	TS	$0	$4,148
82	Fresno	Aug-04	$920,000	80	80	Raisin City		TG	$0	$11,500
83	Fresno	Aug-04	$900,000	60.89	42	Fresno		TS	$0	$14,781
84	Fresno	Aug-04	$1,560,000	280	280	Raisin City		TS	$34,000	$5,450
85	Fresno	Aug-04	$450,000	39.7	39.7	Fresno		TS	$0	$11,335
86	Fresno	Aug-04	$265,000	20	20	Kerman	FID	TS	$50,000	$10,750
87	Fresno	Aug-04	$340,000	60	60	Caruthers	RCWD	TS	$0	$5,667
88	Tulare	Aug-04	$528,000	160	160		DEID	TG	$0	$3,300
89	Fresno	Aug-04	$380,000	53.1	53.1	Parlier	CID	TS	$29,680	$6,597
90	Madera	Aug-04	$280,000	39.4	39.4	Madera	MID	TS	$0	$7,107
91	Fresno	Sep-04	$639,000	76.98	76.98	Caruthers		TS	$98,352	$7,023
92	Madera	Sep-04	$360,000	39.18	39.18	Madera	MID	TS	$60,000	$7,657
93	Fresno	Sep-04	$265,000	20	20	Fresno		TS	$0	$13,250
94	Fresno	Sep-04	$325,000	30.48	30.48	Selma	CID	TS	$27,000	$9,777
95	Fresno	Sep-04	$515,000	102.04	65	Orange Cove	OCID	TG	$0	$5,047
96	Madera	Sep-04	$182,000	19.7	19.7	Madera	MID	TS	$0	$9,239
97	Tulare	Sep-04	$860,000	111.17	111.17	Tagus	TID	WG	$0	$7,736
98	Fresno	Sep-04	$120,000	10	10	Kerman	FID	TS	$0	$12,000
99	Fresno	Oct-04	$310,000	40	40	Del Rey	CID	TS	$0	$7,750
100	Fresno	Oct-04	$170,000	18.84	18.84	Kerman		TS	$0	$9,023
101	Madera	Oct-04	$1,060,000	163.48	163.48	Madera	MID	TS	$0	$6,484
102	Tulare	Oct-04	$328,000	39.52	39.52	Cutler	AID	TS	$0	$8,299
103	Tulare	Oct-04	$420,000	54.43	54.43	Tulare	P/W	WG	$0	$7,716
104	Fresno	Oct-04	$585,000	38.56	38.56	Kerman	FID	TS	$130,000	$11,800
105	Madera	Oct-04	$1,300,000	64.93	64.93	Madera	MID	TS	$300,000	$8,500
106	Fresno	Oct-04	$215,000	20	20	Kerman	FID	TS	$40,000	$8,750
107	Kern	Oct-04	$2,000,000	518.53	228.73	Maricopa	WRMWSD	TG	$0	$3,489
108	Fresno	Oct-04	$852,500	77.5	77.5	Easton	FID	TS	$0	$11,000
109	Fresno	Oct-04	$450,000	37.67	37.67	Caruthers	CID	TS	$40,000	$10,884
110	Madera	Oct-04	$383,500	38.35	38.35	Madera	MID	TS	$0	$10,000
111	Madera	Oct-04	$1,926,500	155.11	155.11	Madera	MID	TS	$295,000	$10,518
112	Madera	Nov-04	$1,263,000	154.09	89	Madera	MID	TS	$78,370	$9,500
113	Madera	Nov-04	$280,000	39.39	39.39	Madera		TS	$40,000	$4,949
114	Tulare	Nov-04	$350,000	175.62	33.33	Dinuba	AID	TG	$0	$1,992

Vineyard Sales, 2004

#	County	Recorded Date	Price	Total Acres	Vineyard Acres	Area	Irrigation District	Type	CV	Net $/Acre
115	Madera	Nov-04	$750,000	77.87	77.87	Madera	MID	TS	$0	$9,631
116	Madera	Nov-04	$1,014,000	177.88	140.3	Madera	P/W	TS	$5,000	$5,823
117	Fresno	Nov-04	$220,000	18.73	18.73	Easton	CID	TS	$30,000	$10,144
118	Fresno	Nov-04	$300,000	33.17	33.17	Caruthers	CID	TS	$34,640	$8,000
119	Fresno	Nov-04	$450,000	20	20	Kingsburg	P/W	TS	$290,016	$8,000
120	Tulare	Nov-04	$1,250,000	220	160.5	Earlimart	DEID	TG	$0	$6,679
121	Fresno	Dec-04	$300,000	40	40		CID	TS	$0	$7,500
122	Fresno	Dec-04	$1,105,000	195.18	195.18	Sanger	KRWD	TS	$10,000	$5,610
123	Madera	Dec-04	$422,000	48.11	48.11	Madera	MID	TS	$0	$8,772
124	Fresno	Dec-04	$565,121	77.78	77.78	Fowler	CID	TS	$20,661	$7,000
125	Fresno	Dec-04	$700,000	99.55	99.55	Kerman	FID	WG	$0	$7,032
126	Kern	Dec-04	$220,000	39.41	39.41	Lamont	P/W	TS	$0	$5,582
127	Kern	Dec-04	$1,325,000	273.63	257.88		SWSD	TG	$54,000	$4,777
128	Fresno	Dec-04	$269,000	21.77	21.77	Kerman	P/W	TS	$24,000	$11,254
129	Kern	Dec-04	$610,000	58.48	58.48			TS	$0	$10,431
130	Madera	Dec-04	$1,536,360	146.32	146.32	Madera	MID	TS	$0	$10,500
131	Madera	Dec-04	$470,000	87.68	87.68	Madera	P/W	TS	$0	$5,360
132	Fresno	Dec-04	$220,000	20	20	Kerman	FID	TS	$0	$11,000
	TOTALS		**$76,659,019**	**10,862.00**	**9,245.58**				**$4,594,880**	**$6,997**

Min	$1,992
Max	$40,008
Mean	$6,997.42

#	County	Recorded Date	Price	Total Acres	Vineyard Acres	Area	Irrigation District	Type	CV	Net $/Acre
1	Kern	Jan-05	$677,500	139.09	129.09	Shafter	CWD	TG	$0	$5,236
2	Fresno	Jan-05	$500,000	40	40	Kerman	FID	TS	$100,000	$10,000
3	Fresno	Jan-05	$670,000	85.87	50	Reedley	AID	TS	$26,000	$7,500
4	Kern	Jan-05	$1,150,000	158.91	158.91	Lamont	AEWSD	TG	$50,000	$6,922
5	Madera	Jan-05	$3,279,500	327.95	160	Madera	MID	WG	$0	$10,000
6	Fresno	Jan-05	$320,000	30	30	Kingsburg	CID	TS	$30,000	$9,667
7	Madera	Jan-05	$440,000	60.94	58.5	Madera	MID	WG	$0	$7,280
8	Fresno	Jan-05	$240,000	37.5	37.5	Fresno	FID	TS	$0	$6,400
9	Fresno	Jan-05	$657,000	76.7	76.7	Caruthers	RCWD	TS	$43,400	$8,000
10	Madera	Jan-05	$320,000	39.27	39.27	Madera	MID	TS	$0	$8,148
11	Fresno	Jan-05	$290,000	18.75	18.75	Easton	CID	TS	$80,462	$11,175
12	Fresno	Jan-05	$540,000	69.45	40	Kingsburg	CID	TS	$27,000	$7,243
13	Tulare	Feb-05	$3,000,000	406.15	20.42	Visalia	TID	NC	$0	$7,386
14	Fresno	Jan-05	$500,000	29.73	29.73	Kerman	FID	TS	$235,000	$8,914
15	Fresno	Jan-05	$460,000	61.47	50	Selma	CID	TS	$45,000	$7,016
16	Madera	Feb-05	$1,138,000	135.08	97		MID	TS	$45,000	$8,092
17	Tulare	Feb-05	$225,000	19	14	Reedley	AID	TG	$0	$11,842
18	Tulare	Feb-05	$460,000	79.73	79.73	Earlimart	DEID	TS	$0	$5,769
19	Fresno	Feb-05	$245,000	29.61	29.61	Fresno	FID	TS	$0	$8,274
20	Fresno	Feb-05	$400,000	37.44	25	Selma	CID	TS	$100,000	$8,013
21	Tulare	Feb-05	$1,687,500	160	156	Kingsburg	AID	WG	$80,000	$10,047
22	Madera	Feb-05	$240,000	19.7	19.7	Madera	MID	TS	$42,000	$10,051
23	Fresno	Feb-05	$436,000	40	40	Selma	CID	TS	$56,000	$9,500
24	Madera	Feb-05	$4,000,000	630.39	630.39		MID	WG	$0	$6,345
25	Madera	Feb-05	$16,221,082	2002.54	1731.82		MID	WG	$0	$8,400
26	Fresno	Feb-05	$612,000	79.14	38.94	Selma	CID	TS	$59,280	$8,000
27	Fresno	Feb-05	$500,000	28.42	28.42	Biola	FID	TS	$48,122	$15,900
28	Fresno	Mar-05	$150,000	19.55	19.55	Del Rey	CID	TS	$0	$7,673
29	Madera	Mar-05	$730,575	97.41	97.41	Madera	MID	TS	$0	$7,500
30	Fresno	Mar-05	$217,500	18.41	18.41	Selma	CID	TS	$1,500	$11,733
31	Madera	Mar-05	$2,120,000	313.01	40	Madera	MID	TS	$107,338	$7,964
32	Fresno	Mar-05	$495,000	60	60	Caruthers	CCID	TS	$0	$8,250
33	Madera	Mar-05	$710,000	79.83	38	Chowchilla	CWD	WG	$70,935	$5,379
34	Fresno	Mar-05	$591,000	39.4	39.4	Sanger		TS	$0	$15,000
35	Fresno	Mar-05	$360,000	39.99	39.99	Caruthers		TS	$21,000	$8,477
36	Fresno	Mar-05	$275,000	21.18	21.18	Caruthers	LWD	TS	$48,000	$10,717
37	Madera	Mar-05	$540,000	57.71	57.71	Madera	MID	TS	$62,000	$8,283
38	Madera	Mar-05	$600,000	38.21	38.21	Madera	MID	TS	$225,000	$10,078
39	Madera	Mar-05	$6,000,000	612.09	600		P/W	WG	$0	$9,802
40	Fresno	Mar-05	$168,000	18.23	12	Parlier	CID	TS	$20,000	$9,089
41	Madera	Mar-05	$526,000	74.64	25	Madera	MID	TS	$15,000	$7,534
42	Tulare	Mar-05	$650,000	78.83	68.67	Orange Cove	OCID	TG	$181,010	$6,101
43	Fresno	Apr-05	$495,000	60	60	Selma	CID	TS	$15,000	$8,000
44	Tulare	Apr-05	$230,000	37.32	20	DEID	DEID	TG	$0	$7,603
45	Tulare	Apr-05	$3,970,000	558.09	558.09	Terra Bella	P/W	TG	$0	$7,114
46	Fresno	Apr-05	$400,000	39.4	39.4	Easton	CID	TS	$30,000	$9,391
43	Fresno	Apr-05	$540,000	38.8	32	Easton	CID	TS	$171,420	$10,243
44	Fresno	Apr-05	$350,000	19.78	19.78	Caruthers	P/W	TS	$87,915	$13,250
45	Fresno	Apr-05	$280,000	20	20	Kerman	FID	TS	$32,000	$12,400
46	Tulare	Apr-05	$145,000	10	10	Reedley	AID	TG	$0	$14,500
47	Fresno	Apr-05	$440,000	33.42	20	Del Rey	CID	TS	$135,650	$9,000
48	Fresno	Apr-05	$300,000	19.7	19.7	Selma	CID	TS	$104,650	$9,916
49	Fresno	Apr-05	$324,000	40.23	40.23	Selma	CID	TS	$0	$8,054
50	Fresno	May-05	$150,000	18.21	12.25	Kerman	FID	TS	$0	$9,327
51	Fresno	May-05	$210,000	19.55	19.55	Caruthers	CID	TS	$0	$10,741

Vineyard Sales, 2005

#	County	Recorded Date	Price	Total Acres	Vineyard Acres	Area	Irrigation District	Type	CV	Net $/Acre
52	Fresno	May-05	$1,350,000	483.23	170	San Joaquin	P/W	TS	$40,000	$3,100
53	Fresno	May-05	$400,000	38.2	27	Easton	FID	TS	$23,438	$10,417
54	Madera	May-05	$725,000	76.55	76.55	Madera	MID	TS	$50,000	$8,818
55	Tulare	May-05	$140,000	10	10	Reedley	AID	TG	$0	$14,000
56	Fresno	Jun-05	$410,000	34.25	34.25	Caruthers	P/W	TS	$101,750	$9,000
57	Fresno	Jun-05	$200,000	19.5	19.5	Caruthers	RCWD	TS	$20,000	$9,231
58	Fresno	Jun-05	$374,800	36.91	36.91	Caruthers	LWD	TS	$0	$10,154
59	Madera	Jun-05	$1,254,500	151.68	151.68	Madera	MID	TS	$25,892	$8,100
60	Fresno	Jun-05	$1,424,000	160.32	40	Kerman		TS	$0	$10,000
61	Madera	Jun-05	$7,000,000	922.89	779.54	Firebaugh	P/W	WG	$0	$8,764
62	Fresno	Jul-05	$490,000	19.7	19.7	Caruthers	P/W	TS	$263,450	$11,500
63	Fresno	Jul-05	$550,000	13.95	13.95		FID	TS	$0	$39,427
64	Fresno	Jul-05	$1,070,460	98.18	98.18	Selma	CID	TS	$162,721	$9,246
65	Fresno	Jul-05	$400,000	40.45	40.45	Caruthers	CID	TS	$45,000	$8,776
66	Fresno	Jul-05	$260,000	30	30	Caruthers	RCWD	TS	$43,279	$7,450
67	Tulare	Jul-05	$1,800,000	310.58	244.14	Earlimart	DEID	TG	$0	$5,990
68	Fresno	Aug-05	$600,000	40	40	Fowler	CID	TS	$0	$15,000
69	Madera	Aug-05	$950,000	77.43	77.43	Madera	MID	TS	$293,700	$9,767
70	Fresno	Aug-05	$275,000	19.77	19.77	Fowler	CID	TS	$57,530	$11,000
71	Madera	Aug-05	$900,000	91.69	85	Madera	P/W	TS	$212,325	$7,500
72	Kern	Aug-05	$264,375	36.15	36.15	Lamont	AEWSD	TS	$0	$7,313
73	Madera	Sep-05	$31,402,490	13653.08	318.09	Madera	MID	WG	$100,000	$8,000
74	Fresno	Sep-05	$665,000	80	80	Easton	CID	TS	$0	$8,313
75	Tulare	Sep-05	$460,000	77.98	69.7	Earlimart	PID	TG	$0	$6,128
76	Fresno	Oct-05	$400,000	20	20	Easton	FID	TS	$0	$20,000
77	Fresno	Oct-05	$250,000	19.55	19.55	Kerman	FID	TS	$0	$12,788
78	Fresno	Oct-05	$510,000	20	20	Kerman	FID	TS	$40,800	$23,460
79	Madera	Oct-05	$780,000	77.89	36	Madera	P/W	WG	$0	$8,919
80	Fresno	Nov-05	$1,000,000	100	39	Kerman	FID	TS	$0	$10,000
81	Madera	Nov-05	$275,000	18.28	18.28	Madera Ranchos	MID	TS	$0	$15,044
82	Madera	Nov-05	$1,220,000	155.16	36	Madera	MID	WG	$0	$7,863
83	Madera	Nov-05	$465,000	40	40	Madera	MID	TS	$63,000	$10,050
84	Tulare	Nov-05	$675,000	40	40	Kingsburg	CID	TS	$75,000	$15,000
85	Madera	Nov-05	$340,000	22.32	22.32	Madera Ranchos	MID	TS	$0	$15,233
86	Fresno	Dec-05	$415,000	19.4	19.4	Sanger	CID	TS	$0	$21,392
87	Madera	Dec-05	$340,000	18.33	18.33	Madera Ranchos	MID	TS	$0	$18,549
88	Kern	Dec-05	$1,500,000	284.54	284.54	Delano	SSJMUD	TG	$0	$5,272
89	Madera	Dec-05	$650,000	82.71	78	Chowchilla	CWD	WG	$0	$7,859
90	Fresno	Dec-05	$780,000	109.59	109.59	Three Rocks	WWD	TG	$0	$7,117
	TOTALS		**$124,141,282**	**24,876.08**	**9,195.01**				**$4,013,567**	**$8,319**

Min	$3,100
Max	$39,427
Mean	$8,318.88

Vineyard Sales, 2005

#	County	Recorded Date	Price	Total Acres	Vineyard Acres	Area	Irrigation District	Type	CV	Net $/Acre
1	Fresno	Jan-06	$150,000	9.85	9.85	Kerman	FID	TS	$0	$15,228
2	Madera	Jan-06	$750,000	76.37	76.37	Madera	MID	TS	$9,200	$9,700
3	Tulare	Jan-06	$1,000,000	78.94	78.94	Traver	AID	TG	$71,010	$11,768
4	Fresno	Jan-06	$960,000	100.11	60	Caruthers	CID	TS	$0	$11,000
5	Madera	Jan-06	$425,000	39.32	39.32	Madera	MID	TS	$36,000	$9,893
6	Madera	Jan-06	$660,000	52.38	52.38	Madera	MID	TS	$0	$12,600
7	Fresno	Jan-06	$1,120,000	76.4	76.4	Easton		TG	$100,140	$12,607
8	Fresno	Jan-06	$280,000	20	20		FID	TS	$0	$14,000
9	Fresno	Jan-06	$400,000	40	40	Kerman	FID	TS	$0	$10,000
10	Madera	Jan-06	$1,000,000	154.11	154.11	Madera	MID	TS	$0	$6,489
11	Fresno	Feb-06	$800,000	56.33	56.33	Sanger		TS	$0	$14,202
12	Fresno	Feb-06	$9,251,250	2467.04	611	Cantua Creek	WWD	WG	$80,000	$5,189
13	Fresno	Feb-06	$330,000	18.79	18.79	Biola	FID	TS	$30,000	$15,966
14	Fresno	Feb-06	$785,000	17	17	Fresno		TS	$0	$46,176
15	Tulare	Feb-06	$1,500,000	166.42	166.42	Terra Bella	SID	TG	$0	$9,013
16	Fresno	Feb-06	$780,000	40	40	Biola	FID	TS	$137,100	$16,072
17	Fresno	Feb-06	$1,000,000	81.56	20	Caruthers	RCWD	TS	$0	$9,000
18	Madera	Mar-06	$840,000	73.55	55.5	Madera	MID	TS	$0	$11,420
19	Fresno	Mar-06	$500,000	18.85	18.85	Sanger	CID	TS	$0	$26,525
20	Madera	Mar-06	$1,016,000	94.12	94.12			TS	$25,000	$10,529
21	Tulare	Mar-06	$1,600,000	158.9	158.9	Poplar		TG	$0	$10,069
22	Madera	Mar-06	$450,000	39.25	39.25	Madera	MID	TS	$62,500	$9,873
23	Fresno	Mar-06	$390,000	26.66	26.66	Kerman	FID	TS	$0	$14,629
24	Madera	Mar-06	$400,000	39.82	39.82	Madera	MID	TS	$0	$10,045
25	Kern	Mar-06	$490,000	55.92	55.92	Delano	P/W	TG	$0	$8,763
26	Fresno	Apr-06	$1,800,000	160	146	Burrel	LMRC/BDC	WG	$0	$11,250
27	Fresno	Apr-06	$188,500	17.5	17.5	Fresno	FID	TS	$0	$10,771
28	Fresno	Apr-06	$380,000	33.82	24	Easton	FID	TS	$50,000	$9,758
29	Madera	Apr-06	$745,000	108.76	108.76	Madera	MID	TS	$0	$6,850
30	Fresno	May-06	$615,000	36.48	36.48	Selma	CID	TS	$127,800	$13,355
31	Fresno	May-06	$510,000	19.69	19.69	Kerman	FID	TS	$0	$25,901
32	Fresno	May-06	$400,000	19.46	19.46	Kerman	FID	TS	$2,400	$20,400
33	Fresno	Jun-06	$400,000	18.66	18.66	Fresno		TS	$285,000	$20,000
34	Fresno	Jul-06	$540,000	40.45	40.45	Caruthers		TS	$76,400	$11,461
35	Fresno	Jan-06	$603,000	20	20	Fresno	FID	TS	$195,090	$20,396
	TOTALS		**$33,058,750**	**4,476.51**	**2,476.93**				**$1,287,640**	**$9,848**

Min	$5,189
Max	$46,176
Mean	$9,847.54

Vineyard Sales, 2006

Exhibit "D"

Unirrigated, Navtie Land Sales

#	County	Recorded Date	Price	Total Acres	Area	Irrigation District	Primary Land Use	CV	Net $/Acre
1	Tulare	14-Jan-02	$3,060,000	2,360.39	North Fork		OL	$750,000	$1,296
2	Madera	04-Feb-02	$200,000	200.12	Madera Ranchos	None	OL	$0	$999
3	Madera	13-Feb-02	$100,000	80.00	Madera Ranchos		OL	$0	$1,250
4	Fresno	04-Mar-02	$12,000	160.82	Coalinga		OL	$0	$75
5	Fresno	28-Mar-02	$26,000	40.00	Mercy Hot Sprin		OL	$0	$650
6	Fresno	02-Apr-02	$364,000	362.15	Clovis		OL	$0	$1,005
7	Madera	09-Apr-02	$2,400,000	4,364.23	O'Neals		OL	$0	$550
8	Madera	23-Apr-02	$264,000	321.22	Hensley Lake		OL	$0	$822
9	Tulare	25-Apr-02	$4,500,000	6,195.84	Exeter		OL	$0	$726
10	Tulare	26-Apr-02	$4,500,000	6,195.81	Visalia	P/W	OL	$200,000	$694
11	Madera	22-May-02	$112,000	68.45	Knowles Junctio		OL	$0	$1,636
12	Madera	07-Jun-02	$75,000	37.10	Raymond		OL	$0	$2,022
13	Fresno	09-Jul-02	$36,000	160.00	Pine Flat		OL	$0	$225
14	Madera	10-Jul-02	$83,000	38.74	Raymond		OL	$0	$2,142
15	Kings	22-Aug-02	$15,500	153.47			OL	$0	$101
16	Madera	06-Sep-02	$350,000	330.00			OL	$0	$1,061
17	Fresno	13-Sep-02	$45,000	160.00	Pine Flat		OL	$0	$285
18	Kings	03-Oct-02	$50,000	100.00	Kettleman City	None	OL	$0	$500
19	Tulare	30-Oct-02	$80,000	80.00	Earlimart		OL	$0	$1,000
20	Merced	27-Nov-02	$1,800,000	949.00	Gustine	CCID/GWD	OL	$0	$1,897
21	Fresno	20-Dec-02	$135,000	320.00	Pine Flat		OL	$0	$422
22	Madera	20-Dec-02	$1,000,000	1,396.20	Chowchilla		OL	$0	$716
23	Merced	27-Dec-02	$270,000	169.00	Los Banos		OL	$0	$1,598
24	Tulare	31-Dec-02	$1,375,000	1,481.23	Springville		OL	$150,000	$827
	TOTALS		**$20,852,500**	**25,723.77**				**$1,100,000**	**$768**

Min	$75
Max	$2,142
Mean	$767.87

#	County	Recorded Date	Price	Total Acres	Area	Irrigation District	Primary Land Use	CV	Net $/Acre
1	Fresno	Feb-03	$200,000	157.06	Piedra		OL	$0	$1,273
2	Madera	Feb-03	$600,000	320.00	Madera Ranchos		OL	$0	$1,875
3	Madera	Feb-03	$600,000	320.00	Madera	None	OL	$0	$1,875
4	Madera	Mar-03	$80,000	38.80	Knowles Junctio		OL	$0	$2,062
5	Fresno	Mar-03	$290,000	42.86	Minkler	KRWD	OL	$0	$6,790
6	Merced	Mar-03	$631,500	841.50	Santa Nella	DPWD	OL	$0	$750
7	Fresno	Apr-03	$75,000	141.82	Coalinga		OL	$0	$529
8	Fresno	Apr-03	$900,000	1,440.00	Wonder Valley		OL	$0	$625
9	Madera	May-03	$143,000	75.86	Knowles Junctio		OL	$0	$1,885
10	Fresno	May-03	$61,000	160.00	Pine Flat		OL	$0	$381
11	Fresno	Jun-03	$250,000	19.90	Coalinga	PVWD	OL	$130,600	$6,000
12	Merced	Jun-03	$965,000	2,329.40	Santa Nella		OL	$0	$414
13	Madera	Jul-03	$180,000	158.80	North Fork		OL	$0	$1,134
14	Fresno	Aug-03	$220,000	19.88	Coalinga	PVWD	OL	$114,636	$5,300
15	Kern	Aug-03	$65,000	160.00	McFarland	KTWD	OL	$0	$406
16	Fresno	Aug-03	$135,500	320.00	Dinkey Creek		OL	$0	$423
17	Merced	Aug-03	$6,000,000	8,825.93	Santa Nella		OL	$0	$680
18	Merced	Aug-03	$3,075,000	3,222.00	Santa Nella		OL	$0	$954
19	Merced	Oct-03	$1,300,000	1,301.90	Santa Nella	SLWD	OL	$0	$999
20	Madera	Oct-03	$135,000	42.15	Daulton		OL	$0	$3,203
	TOTALS		**$15,906,000**	**19,937.86**				**$245,236**	**$785**

Min	$381
Max	$6,790
Mean	$785.48

#	County	Recorded Date	Price	Total Acres	Area	Irrigation District	Primary Land Use	CV	Net $/Acre
1	Fresno	Feb-04	$1,150,000	434.73	Humphrey's Stat		OL	$750,000	$920
2	Madera	Feb-04	$475,000	380.07	Madera		OL	$0	$1,250
3	Madera	May-04	$2,475,000	2,833.86	Madera		OL	$100,000	$838
4	Tulare	May-04	$1,500,000	1,836.58	Lemon Cove		OL	$0	$817
5	Fresno	May-04	$188,500	145.50	Piedra		OL	$0	$1,296
6	Merced	Jun-04	$250,000	86.10	Volta	P/W	OL	$0	$2,904
7	Kern	Jun-04	$166,000	480.00	Blackwells Corn	BMWD	OL	$0	$346
8	Merced	Sep-04	$450,000	358.00	Dos Palos		OL	$0	$1,257
9	Tulare	Oct-04	$1,628,000	1,988.67	South Fork		OL	$0	$819
10	Madera	Oct-04	$198,000	185.02	Madera	None	OL	$0	$1,070
11	Merced	Nov-04	$761,500	1,015.20	Santa Nella		OL	$0	$750
12	Madera/Merced	Dec-04	$6,000,000	3,022.69			OL	$0	$3,023
13	Merced	Dec-04	$350,000	234.00			OL	$0	$1,496
14	Fresno	Dec-04	$1,180,000	9,439.40			OL	$0	$125
	TOTALS		**$16,772,000**	**22,439.82**				**$850,000**	**$710**

Min	$125
Max	$3,023
Mean	$709.54

Native Land Sales, 2004

#	County	Recorded Date	Price	Total Acres	Area	Irrigation District	Primary Land Use	CV	Net $/Acre
1	Kings	03-Jan-05	$40,000	57.37	Kettleman City	None	OL	$0	**$701**
2	Kern	14-Jan-05	$116,740	60.03		None	OL	$0	**$1,945**
3	Merced	14-Mar-05	$85,000	110.00	Santa Fe Grade		OL	$0	**$773**
4	Fresno	25-Mar-05	$155,000	320.00	Tollhouse		OL	$0	**$484**
5	Kern	31-Mar-05	$189,624	158.02	Oildale		OL	$0	**$1,200**
6	Kern	04-May-05	$450,000	316.36	Wasco		OL	$0	**$1,422**
7	Kern	15-May-05	$178,500	254.52	Wasco		OL	$0	**$701**
8	Tulare	10-Jun-05	$3,200,000	954.45	Springville		OL	$0	**$3,352**
9	Fresno	05-Aug-05	$775,000	719.96			OL	$0	**$1,076**
10	Tulare	01-Sep-05	$775,000	372.00	Springville		OL	$0	**$2,083**
11	Fresno	18-Nov-05	$275,000	240.00			OL	$0	**$1,146**
12	Tulare	29-Nov-05	$960,000	640.00	Springville		OL	$0	**$1,500**
	TOTALS		**$7,199,864**	**4,202.71**				**$0**	**$1,713**

Min	$484
Max	$3,352
Mean	$1,713.15

#	County	Recorded Date	Price	Total Acres	Area	Irrigation District	Primary Land Use	CV	Net $/Acre
1	Fresno	Feb-06	$450,000	240.00	Dunlap	P/W	OL	$40,000	**$1,708**
2	Tulare	May-06	$648,952	193.56	Springville		OL	$0	**$3,353**
3	Madera	Jun-06	$2,327,000	895.00	Chowchilla		OL	$0	**$2,600**
4	Fresno	Jun-06	$2,175,000	1,439.03	Squaw Valley		OL	$197,334	**$1,374**
5	Madera	Jun-06	$969,500	296.68	Chowchilla		OL	$0	**$3,267**
	TOTALS		**$6,570,452**	**3,064.27**				**$237,334**	**$2,067**

Min	$1,374
Max	$3,353
Mean	$2,066.76

Attachment 3
Project and Construction Cost Estimates

Cost Estimates Summary

General

Feasibility designs and cost estimates were primarily prepared by the Bureau of Reclamation's Technical Services Center (TSC), Denver, Colorado. Where the TSC was the design entity, quantity takeoffs were prepared by staff within various TSC design groups. Unit pricing for the cost estimates was developed by the TSC's Estimating, Specifications, and Value Program Group (Estimating Group). The following exceptions to this process are noted as follows:

(1) Feasibility designs, quantity takeoffs, and cost estimates for the selenium biotreatment plants were prepared by Zenon Membrane Solutions, a unit of GE Water. These cost estimates were reviewed by the Estimating Group, and some cost items were revised to better align with Reclamation pricing methods.

(2) The proposed facilities include construction of four selenium biotreatment plants at different locations within the project area. Feasibility designs and cost estimates were prepared for three of the four plants. The estimated construction cost for the fourth plant, which was not designed, is conservatively assumed to be the same as the next larger plant that was designed. This approach is deemed adequate because:

- Process designs and plant layouts are basically identical among the four plants.
- The difference in plant capacity between the plant that was not designed and the next larger plant is not great (approximately 500 acre-feet per year).
- There are no significant differences in the site-specific conditions at the different plant locations that would impact constructability.

(3) Appraisal level designs, quantity takeoffs, and cost estimates for the reverse osmosis (RO) treatment plants were developed by the TSC's Water Treatment Engineering and Research Group. Quantities and unit prices are judged to be appraisal level because they were generated using Reclamation's cost modeling software, which uses a database of historical

costs indexed to the present. These cost estimates were reviewed by the Estimating Group, and some cost items were revised to better align with Reclamation pricing methods. The RO cost estimates, while at appraisal level, constitute about 3 percent of the total project cost estimate. Larger than normal cost contingencies were applied to the RO cost estimates to mitigate the risk associated with using appraisal level estimates.

(4) Feasibility quantity takeoffs and cost estimates for power transmission lines were prepared by the Division of Design and Construction, Mid-Pacific Region (MP Region), Sacramento, California.

(5) A market study of land and rights unit prices was prepared by Correia – Xavier, Inc. MP Region reviewed this study and developed the lands and rights cost estimates for project alternatives using the study data. The lands and rights evaluation and market study are presented in attachment 2 to this Feasibility Design Appendix.

Format and Additional Percentage Items

A cost estimate usually consists of a list of items that can be quantified and unit priced. These items are generally referred to as the "major line items" (MLI) of the estimate. To bring the cost estimate up to a total project cost requires inclusion of "additional percentage items" (API) that are included based upon a percentage of one or more line items in the cost estimate. The quality and accuracy of the cost estimate vary, depending on the level of work effort put forward to develop the estimate and stage of project development. Reclamation currently identifies six levels of cost estimating. The appraisal and feasibility levels are the second and third levels, respectively. Developing a total project cost estimate (PCE) that is capable of traversing all six of these cost estimate levels requires the use of accepted cost estimating practices and a significant application of judgment. As the level of cost estimate increases, the data, criteria, and design of the project improves, thus increasing the quality, accuracy, and number of line items that comprise the MLI. Additionally, one or more of the percentages used for the APIs is reduced to accommodate the improved MLI. Described below are the APIs used in this project's cost estimates, the applicable percentage assigned to each, and the items to which they are applied. Additionally, a description of the various subtotals required throughout the estimate is provided. These items are generally listed in the order in which they are applied within an estimate.

Mobilization

Mobilization is a line item that appears in construction contract bid schedules and covers payment for the following:

- The movement of personnel, equipment, supplies, and incidentals to the project site

- Establishment of offices, buildings, plants, and other facilities at the site and installation of utilities to these facilities

- Payment of premiums for project bonds and insurance

- Other work which must be performed incidental to the initiation of meaningful work at the site and for which the contract does not otherwise provide payment

- Development of an approved detailed logic diagram and baseline schedule. For this project, mobilization was judged to be 5 percent of all listed MLI costs above the mobilization line item.

Unlisted Items

When developing a cost estimate at the appraisal or feasibility level, it is not practical to identify all cost items in the cost estimate that may appear in a construction contract bid schedule. For an appraisal or feasibility level cost estimate, it is normal practice to identify and cost those items that account for the major cost elements in a construction contract bid schedule. Those items that are not incorporated from a construction contract bid schedule are considered minor elements of an appraisal or feasibility cost estimate and are not identified specifically. Instead, these items are carried in a line item labeled "unlisted items" that is valued as a percentage of the listed MLI items presented above the "unlisted items" line item. Additionally, this line item provides a small contingency for minor design changes during the design process. For this project, unlisted items were judged to be 15 percent of the listed MLI identified, including mobilization. This percentage was applied to all plant accounts, except land and rights, and all project feature estimates, except those for the evaporation ponds where the unlisted items percentage was modified to 10 percent. Unlisted items percentages for the land and rights plant account are discussed below.

Allowance for Procurement Strategies

This line item is provided to account for additional costs incurred when solicitations are advertised and awarded under other than full and open competition. These include solicitations that will be set aside under socioeconomic programs, along with solicitations that may limit competition or allow award to other than the lowest bid or proposal. Examples include Hub-zone, 8(a) competitive and negotiated procurements, small business set-aside, Public Law 93-638 - Indian Self-Determination Act, or Request for Proposals where award may be based on technical considerations. This cost was determined to be 5 percent of the MLI costs, including mobilization and unlisted items. The features selected for application of this allowance were determined by the TSC and carried forward by the region as the cost estimates were structured in CCE format.

Contract Cost

A contract cost is the sum of all MLI cost, mobilization, unlisted items, and the allowance for procurement strategies. The contract cost attempts to provide an estimate of the contract award amount at a cost level identified on the construction cost estimates (CCE).

Contingencies

This cost allowance is provided to cover minor differences in actual versus estimated quantities, unforeseen difficulties at the site, changed site conditions, minor plan changes, and other uncertainties that may occur after a contract is awarded. The cost allowance is determined as a percentage of the contract cost. Generally, the contingency percentage applied to the various contract costs was determined to be 20 percent for all feasibility level cost estimates and 25 percent for all appraisal level cost estimates. Variations from this general practice occur in this cost estimate at the following locations:

(1) **Selenium biotreatment plants**: These facilities were estimated at the feasibility level. Because of uncertainties associated with the startup and fine-tuning of these technologically advanced plants, it was determined that the contingency line item be increased from 20 percent to 25 percent for all these plants.

(2) **RO treatment plants**: These facilities were estimated at the appraisal level. Because feasibility level estimates were not prepared for any of these plants, it was determined that the contingency line item should be increased from 25 percent to 30 percent for the three proposed plants in Westlands. The Northerly Area plant was thought to pose additional cost risk because of the uncertainty of pretreatment requirements for feedwaters from surface flows, which were not pilot tested in the field. Therefore, the contingency line item for this feature was increased from 25 percent to 35 percent.

(3) **Lands and rights**: Contingency percentages for the land and rights plant account are discussed in paragraph entitled “Land and Rights Additional Percentage Items” below.

Field Cost

A field cost is the sum of the contract cost and contingencies. The field cost attempts to provide an estimate of the cost for a construction contract upon completion of all construction activities at a cost level identified on the CCEs.

Noncontract Costs

This line item is provided to include costs for work or services provided in support of the project. Some of these efforts can be expensed against a specific plant account. Other work is of such a broad, nonspecific nature that it can only be attributed to the project as a whole. These latter costs are referred to as “distributive costs” and include, but are not limited to, facilitating services,

investigations, designs and specifications, construction management, environmental compliance, and archeological considerations. For this project, the percentage for this line item was determined by the regional office. The percentage totaled 27 percent and was broken down as follows:

Facilitating services: 2 percent
Investigations: 3 percent
Designs and specifications: 10 percent
Construction management: 12 percent.

The noncontract API percentages for the Land and Rights plant account are discussed in further detail in paragraph L below.

Feature Construction Cost
The sum of the field cost and the noncontract cost at the feature level. Each identified property has an associated feature construction cost.

Total Construction Cost
Total construction cost is the sum of all the feature construction costs within a property class. These costs are calculated for each property class attributable to the project.

Total Project Cost
Total project cost is the sum of all the total construction costs for the property classes within the project.

Rounding
Rounding is applied to the contract cost, field cost, and total construction cost line items as described by the rounding guidelines contained in the March 1989 edition of the *Cost Estimating Handbook*.

Land and Rights Additional Percentage Items
The APIs used for the Land and Rights plant account are discussed below.

Land and Rights for Project Features
The unlisted items and contingency API percentages used for these plant accounts were 5 percent and 15 percent, respectively. Noncontract API percentages were applied at the same rate as the feature for which the land would be acquired. The unit prices provided for the MLIs presented in the cost estimate reflect feasibility level evaluation of land prices in the area. The quantities presented reflect feasibility level layouts for the required project features required and a Geographic Information System (GIS) assessment of the land use where these facilities are to be located. The additional cost risk to the project estimate is presented in Attachment 2, “Lands and Rights,” and should be adequately addressed by the application of these percentages.

Land and Rights for Land Retirement

This project required development of two alternatives: the Drainage-impaired Alternative and the Water Needs Alternative. Land retirement was required to accommodate both alternatives. The land retirement requirement for each alternative was estimated at 263,894 acres and 142,894 acres, respectively. To accomplish land retirement, it was necessary that the project acquire fee title to this acreage. Because of the significant cost associated with these purchases, the unlisted items and contingency API percentages used for these plant accounts were 5 percent and 5 percent, respectively. The noncontract API percentage used for these estimates was 5 percent. The quantities presented reflect feasibility level layouts of the lands to be retired and a GIS assessment of the existing land use. The additional cost risk to the project estimate is presented in Attachment 2, "Lands and Rights," and should be adequately addressed by the application of these percentages.

Power Transmission Lines

Power would be provided to all reuse areas from commercially available power transmission facilities. It is assumed that project power would be wheeled over commercially available transmission facilities, and power rates would reflect the cost of conveyance to the site. Most project features are not in the immediate vicinity of a local power transmission line. As such, it is assumed that contracts with the local power company would be required to construct necessary power transmission lines and power drop facilities at each site in order to provide necessary power at the site.

The points of power delivery for the reuse facilities would be the pumping plants that collect and pump subsurface drainwater flows into the conveyance pipelines. Electrical power would also be delivered from existing power lines to the general vicinity of the RO and biotreatment plants. Cost estimates for transmission lines to these facility delivery points are based on the distances to the nearest existing power line. All transmission lines are sized as 12 kilovoltamperes (kVA), wood pole facilities. A unit price line item cost for providing a 1-mile-long 12-kVA wood pole transmission line, with fiber optic communication cable attached was estimated to be $150,000. This unit price includes all necessary land easements to install these facilities. The unit price for providing basic service to a site by installing a service pole, meter pole, step down transformer (12 kilovolts to 480 volts), disconnects, and meter is estimated to be $20,000. Not included in these estimates is any necessary refurbishment or upgrade of existing transmission line facilities. It is assumed that all existing transmission lines could carry the additional loads that would be imposed upon them by project related facilities.

The above described line items are applied to transmission lines for each project feature, along with mobilization, unlisted items, contingencies and noncontract costs to develop construction cost estimates for power transmission lines.

Construction Cost Estimates and Project Cost Estimates

The CCEs and PCEs for both project alternatives are listed below, along with total length in pages; they are presented in the same order in the following tables, except that the CCE for the Northerly Area (146 pages) is not repeated for the In-Valley/Water Needs Land Retirement Alternative.

Drainage Impaired Area Land Retirement Alternative

1. PCE for Drainage Impaired 9 pages
2. CCE for Drainage Impaired 1 page
3. CCE for Northerly Area 146 pages

Water Needs Land Retirement Alternative

1. PCE for Water Needs 25 pages
2. CCE for Water Needs 1 page
3. CCE for Northerly Area 146 pages (not repeated in the following tables)
4. CCE for Westlands North 77 pages
5. CCE for Westlands Central 95 pages
6. CCE for Westlands South 78 pages

Drainage Impaired Land Retirement Alternative

Project Cost and Construction Cost Estimates (PCEs and CCEs)

PROJECT COST ESTIMATE

PROJECT: Central Valley Project	PREPARED BY: Regional Office, Sacramento, CA
DIVISION: West San Joaquin Division	ESTIMATE DATE: July 2007 (Revised after DEC)
UNIT: San Luis Unit -- Drainage Impaired Alternative	ESTIMATE TYPE: Feasibility
FEATURE: Drainage Feature Re-Evaluation Feasibility Study	PRICE LEVEL: April 2006

PROPERTY CLASS	IDENTIFIED PROPERTY	PLANT ACCOUNT	DESCRIPTION	ORIGINAL FIELD COST	NEW INDEX	OLD INDEX	CURRENT FIELD COST	TOTAL FIELD COST	NONCONTRACT COST	CONSTRUCTION COST	TOTAL CONSTRUCTION COST
			DRAINAGE IMPAIRED ALTERNATIVE - TOTAL PROJECT COST					1,975,907,000	262,242,000	2,238,149,000	2,238,149,000
			DRAINAGE IMPAIRED RETIRED LAND - PROJECT COST					1,200,000,000	50,000,000	1,250,000,000	1,250,000,000
15			GENERAL PROPERTY					1,200,000,000	50,000,000	1,250,000,000	1,250,000,000
	01		RETIRED LAND					1,200,000,000	50,000,000	1,250,000,000	
		100	Land and Rights				1,200,000,000				
			NORTHERLY AREA - PROJECT COST					775,907,000	212,242,000	988,149,000	988,149,000
03			PUMPING PLANTS					67,674,000	18,226,000	85,900,000	85,900,000
	01		PUMPING PLANT DMC A/B					307,000	83,000	390,000	
		100	Land and Rights								
		160	Pumps and Prime Movers				260,000				
		170	Accessory Electrical Equipment				47,000				
	02		PUMPING PLANT DMC C					323,000	87,000	410,000	
		100	Land and Rights								
		160	Pumps and Prime Movers				270,000				
		170	Accessory Electrical Equipment				53,000				
	03		PUMPING PLANT WCC03A					5,223,000	1,377,000	6,600,000	
		100	Land and Rights								
		130	Structures and Improvements				2,100,000				
		152	Waterways				150,000				
		153	Waterways Structures				1,823,000				
		154	Waterways Protective Works				240,000				
		160	Pumps and Prime Movers				630,000				
		170	Accessory Electrical Equipment				170,000				
		175	Station Equipment				110,000				

PROJECT COST ESTIMATE

PROJECT: Central Valley Project	PREPARED BY: Regional Office, Sacramento, CA
DIVISION: West San Joaquin Division	ESTIMATE DATE: July 2007 (Revised after DEC)
UNIT: San Luis Unit -- Drainage Impaired Alternative	ESTIMATE TYPE: Feasibility
FEATURE: Drainage Feature Re-Evaluation Feasibility Study	PRICE LEVEL: April 2006

PROPERTY CLASS	IDENTIFIED PROPERTY	PLANT ACCOUNT	DESCRIPTION	ORIGINAL FIELD COST	NEW INDEX	OLD INDEX	CURRENT FIELD COST	TOTAL FIELD COST	NONCONTRACT COST	CONSTRUCTION COST	TOTAL CONSTRUCTION COST
			NORTHERLY AREA (continued)								
03			PUMPING PLANTS (continued)								
	04		PUMPING PLANT WCC09A					5,151,000	1,349,000	6,500,000	
		100	Land and Rights								
		130	Structures and Improvements				2,100,000				
		152	Waterways				150,000				
		153	Waterways Structures				1,768,000				
		154	Waterways Protective Works				240,000				
		160	Pumps and Prime Movers				630,000				
		170	Accessory Electrical Equipment				170,000				
		175	Station Equipment				93,000				
	05		PUMPING PLANT WCC10B					3,408,000	892,000	4,300,000	
		100	Land and Rights								
		130	Structures and Improvements				2,100,000				
		152	Waterways				140,000				
		153	Waterways Structures				18,000				
		154	Waterways Protective Works				240,000				
		160	Pumps and Prime Movers				630,000				
		170	Accessory Electrical Equipment				170,000				
		175	Station Equipment				110,000				
	06		PUMPING PLANT WCC06D					3,486,000	914,000	4,400,000	
		100	Land and Rights								
		130	Structures and Improvements				2,100,000				
		152	Waterways				190,000				
		153	Waterways Structures				46,000				
		154	Waterways Protective Works				240,000				
		160	Pumps and Prime Movers				630,000				
		170	Accessory Electrical Equipment				170,000				
		175	Station Equipment				110,000				

PROJECT COST ESTIMATE

PROJECT: Central Valley Project	PREPARED BY: Regional Office, Sacramento, CA
DIVISION: West San Joaquin Division	ESTIMATE DATE: July 2007 (Revised after DEC)
UNIT: San Luis Unit -- Drainage Impaired Alternative	ESTIMATE TYPE: Feasibility
FEATURE: Drainage Feature Re-Evaluation Feasibility Study	PRICE LEVEL: April 2006

PROPERTY CLASS	IDENTIFIED PROPERTY	PLANT ACCOUNT	DESCRIPTION	ORIGINAL FIELD COST	NEW INDEX	OLD INDEX	CURRENT FIELD COST	TOTAL FIELD COST	NONCONTRACT COST	CONSTRUCTION COST	TOTAL CONSTRUCTION COST
			NORTHERLY AREA (continued)								
03			PUMPING PLANTS (continued)								
	07		PUMPING PLANT WCC03B					4,643,000	1,257,000	5,900,000	
		100	Land and Rights								
		130	Structures and Improvements				2,600,000				
		152	Waterways				270,000				
		153	Waterways Structures				53,000				
		154	Waterways Protective Works				240,000				
		160	Pumps and Prime Movers				1,100,000				
		170	Accessory Electrical Equipment				270,000				
		175	Station Equipment				110,000				
	08		PUMPING PLANT WCC11D					4,643,000	1,257,000	5,900,000	
		100	Land and Rights								
		130	Structures and Improvements				2,600,000				
		152	Waterways				270,000				
		153	Waterways Structures				53,000				
		154	Waterways Protective Works				240,000				
		160	Pumps and Prime Movers				1,100,000				
		170	Accessory Electrical Equipment				270,000				
		175	Station Equipment				110,000				
	09		PUMPING PLANT WCC02A					4,643,000	1,257,000	5,900,000	
		100	Land and Rights								
		130	Structures and Improvements				2,600,000				
		152	Waterways				270,000				
		153	Waterways Structures				53,000				
		154	Waterways Protective Works				240,000				
		160	Pumps and Prime Movers				1,100,000				
		170	Accessory Electrical Equipment				270,000				
		175	Station Equipment				110,000				

PROJECT COST ESTIMATE

PROJECT: Central Valley Project	PREPARED BY: Regional Office, Sacramento, CA
DIVISION: West San Joaquin Division	ESTIMATE DATE: July 2007 (Revised after DEC)
UNIT: San Luis Unit -- Drainage Impaired Alternative	ESTIMATE TYPE: Feasibility
FEATURE: Drainage Feature Re-Evaluation Feasibility Study	PRICE LEVEL: April 2006

PROPERTY CLASS	IDENTIFIED PROPERTY	PLANT ACCOUNT	DESCRIPTION	ORIGINAL FIELD COST	NEW INDEX	OLD INDEX	CURRENT FIELD COST	TOTAL FIELD COST	NONCONTRACT COST	CONSTRUCTION COST	TOTAL CONSTRUCTION COST
			NORTHERLY AREA (continued)								
03			PUMPING PLANTS (continued)								
	10		PUMPING PLANT WCC01C					4,760,000	1,240,000	6,000,000	
		100	Land and Rights								
		130	Structures and Improvements				2,700,000				
		152	Waterways				310,000				
		153	Waterways Structures				30,000				
		154	Waterways Protective Works				240,000				
		160	Pumps and Prime Movers				1,100,000				
		170	Accessory Electrical Equipment				270,000				
		175	Station Equipment				110,000				
	11		PUMPING PLANT FC5 a/b					8,678,000	2,322,000	11,000,000	
		100	Land and Rights								
		130	Structures and Improvements				4,500,000				
		152	Waterways				605,000				
		153	Waterways Structures				525,000				
		154	Waterways Protective Works				480,000				
		160	Pumps and Prime Movers				1,880,000				
		170	Accessory Electrical Equipment				485,000				
		175	Station Equipment				203,000				
	12		PUMPING PLANT PCC16D					6,913,000	1,887,000	8,800,000	
		100	Land and Rights								
		130	Structures and Improvements				4,100,000				
		152	Waterways				440,000				
		153	Waterways Structures				510,000				
		154	Waterways Protective Works				240,000				
		160	Pumps and Prime Movers				1,300,000				
		170	Accessory Electrical Equipment				230,000				
		175	Station Equipment				93,000				

PROJECT COST ESTIMATE

PROJECT: Central Valley Project	PREPARED BY: Regional Office, Sacramento, CA
DIVISION: West San Joaquin Division	ESTIMATE DATE: July 2007 (Revised after DEC)
UNIT: San Luis Unit -- Drainage Impaired Alternative	ESTIMATE TYPE: Feasibility
FEATURE: Drainage Feature Re-Evaluation Feasibility Study	PRICE LEVEL: April 2006

PROPERTY CLASS	IDENTIFIED PROPERTY	PLANT ACCOUNT	DESCRIPTION	ORIGINAL FIELD COST	NEW INDEX	OLD INDEX	CURRENT FIELD COST	TOTAL FIELD COST	NONCONTRACT COST	CONSTRUCTION COST	TOTAL CONSTRUCTION COST
			NORTHERLY AREA (continued)								
03			PUMPING PLANTS (continued)								
	13		PUMPING PLANT PCC06D					6,913,000	1,887,000	8,800,000	
		100	Land and Rights								
		130	Structures and Improvements				4,100,000				
		152	Waterways				440,000				
		153	Waterways Structures				510,000				
		154	Waterways Protective Works				240,000				
		160	Pumps and Prime Movers				1,300,000				
		170	Accessory Electrical Equipment				230,000				
		175	Station Equipment				93,000				
	14		PUMPING PLANT PE-14					8,583,000	2,417,000	11,000,000	
		100	Land and Rights								
		130	Structures and Improvements				4,000,000				
		152	Waterways				370,000				
		153	Waterways Structures				2,590,000				
		160	Pumps and Prime Movers				1,300,000				
		170	Accessory Electrical Equipment				230,000				
		175	Station Equipment				93,000				
06			LATERALS					85,900,000	24,100,000	110,000,000	110,000,000
	01		IRRIGATION SYSTEMS					85,900,000	24,100,000	110,000,000	
		100	Land and Rights								
		152	Waterways				82,000,000				
		153	Waterway Structures				3,900,000				
07			DRAINS					27,845,000	7,755,000	35,600,000	35,600,000
	01		COLLECTION SYSTEM - Serving Reuse Area Northerly Areas					6,670,000	1,830,000	8,500,000	
		100	Land and Rights				370,000				
		152	Waterways				5,600,000				
		153	Waterway Structures				700,000				

PROJECT COST ESTIMATE

PROJECT: Central Valley Project	PREPARED BY: Regional Office, Sacramento, CA
DIVISION: West San Joaquin Division	ESTIMATE DATE: July 2007 (Revised after DEC)
UNIT: San Luis Unit -- Drainage Impaired Alternative	ESTIMATE TYPE: Feasibility
FEATURE: Drainage Feature Re-Evaluation Feasibility Study	PRICE LEVEL: April 2006

PROPERTY CLASS	IDENTIFIED PROPERTY	PLANT ACCOUNT	DESCRIPTION	ORIGINAL FIELD COST	NEW INDEX	OLD INDEX	CURRENT FIELD COST	TOTAL FIELD COST	NONCONTRACT COST	CONSTRUCTION COST	TOTAL CONSTRUCTION COST
			NORTHERLY AREA (continued)								
07			DRAINS (continued)								
	02		CONVEYANCE SYSTEM					14,000,000	4,000,000	18,000,000	
		100	Land and Rights								
		152	Waterways				12,500,000				
		153	Waterway Structures				1,500,000				
	03		DELTA - MENDOTA CANAL DRAINAGE PIPELINE					7,175,000	1,925,000	9,100,000	
		100	Land and Rights								
		152	Waterways				7,000,000				
		153	Waterway Structures				175,000				
12			SPECIAL PLANTS					591,247,000	161,253,000	752,500,000	752,500,000
	01		NORTHERLY AREA - REUSE AREAS					81,700,000	23,300,000	105,000,000	
		100	Land and Rights				41,000,000				
		152	Waterways				40,700,000				
	02		RO TREATMENT PLANT					34,390,000	9,610,000	44,000,000	
		100	Land and Rights				20,000				
		130	Structure and Improvements				17,500,000				
		152	Waterways				11,500,000				
		160	Pumps and Prime Movers				2,500,000				
		170	Accessory Electrical				2,200,000				
		180	Installed Supervisory Control System				670,000				
	03		NORTHERLY AREA Se BIOTREATMENT PLANT					103,535,000	26,465,000	130,000,000	
		100	Land and Rights				15,000				
		130	Structures and Improvements				51,070,000				
		152	Waterways				47,760,000				
		160	Pumps and Prime Movers				1,950,000				
		170	Accessory Electrical Equipment				840,000				
		180	Installed Supervisory Control Equipment				1,900,000				

PROJECT COST ESTIMATE

PROJECT: Central Valley Project	PREPARED BY: Regional Office, Sacramento, CA
DIVISION: West San Joaquin Division	ESTIMATE DATE: July 2007 (Revised after DEC)
UNIT: San Luis Unit -- Drainage Impaired Alternative	ESTIMATE TYPE: Feasibility
FEATURE: Drainage Feature Re-Evaluation Feasibility Study	PRICE LEVEL: April 2006

PROPERTY CLASS	IDENTIFIED PROPERTY	PLANT ACCOUNT	DESCRIPTION	ORIGINAL FIELD COST	NEW INDEX	OLD INDEX	CURRENT FIELD COST	TOTAL FIELD COST	NONCONTRACT COST	CONSTRUCTION COST	TOTAL CONSTRUCTION COST
			NORTHERLY AREA (continued)								
12			SPECIAL PLANTS (continued)								
	04		NORTHERLY AREA - EVAPORATION PONDS					336,022,000	92,478,000	428,500,000	
			(1) INITIAL POND CONSTRUCTION					290,242,000	79,758,000	370,000,000	
		100	Land and Rights				7,900,000				
		130	Structures and Improvements				11,500,000				
		150	Reservoirs				110,000,000				
		152	Waterways				155,000,000				
		153	Waterway Structures				5,800,000				
		199	Miscellaneous Installed Equipment				42,000				
			(2) FUTURE ADDITIONAL TERMINAL CELL - 12.5 YEARS LATER					15,260,000	4,240,000	19,500,000	
		100	Land and Rights								
		130	Structures and Improvements				360,000				
		150	Reservoirs				8,600,000				
		152	Waterways				6,300,000				
			(3) FUTURE ADDITIONAL TERMINAL CELL - 25 YEARS LATER					15,260,000	4,240,000	19,500,000	
		100	Land and Rights								
		130	Structures and Improvements				360,000				
		150	Reservoirs				8,600,000				
		152	Waterways				6,300,000				
			(4) FUTURE ADDITIONAL TERMINAL CELL - 37.5 YEARS LATER					15,260,000	4,240,000	19,500,000	
		100	Land and Rights								
		130	Structures and Improvements				360,000				
		150	Reservoirs				8,600,000				
		152	Waterways				6,300,000				

PROJECT COST ESTIMATE

PROJECT: Central Valley Project	PREPARED BY: Regional Office, Sacramento, CA
DIVISION: West San Joaquin Division	ESTIMATE DATE: July 2007 (Revised after DEC)
UNIT: San Luis Unit -- Drainage Impaired Alternative	ESTIMATE TYPE: Feasibility
FEATURE: Drainage Feature Re-Evaluation Feasibility Study	PRICE LEVEL: April 2006

PROPERTY CLASS	IDENTIFIED PROPERTY	PLANT ACCOUNT	DESCRIPTION	ORIGINAL FIELD COST	NEW INDEX	OLD INDEX	CURRENT FIELD COST	TOTAL FIELD COST	NONCONTRACT COST	CONSTRUCTION COST	TOTAL CONSTRUCTION COST
12			SPECIAL PLANTS (continued)								
	05		MITIGATION					35,600,000	9,400,000	45,000,000	
			(1) ALTERNATIVE HABITAT				13,195,000				
			(2) COMPENSATION HABITAT - SHALLOW				758,225				
			(3) COMPENSATION HABITAT - DEEP				10,270,000				
			(4) APPURTENANT FACILITIES				8,288,500				
			Rounding				488,275				
		100	Land and Rights				2,600,000				
13			TRANSMISSION LINES					821,000	228,000	1,049,000	1,049,000
	01		DMC A/B TRANSMISSION LINE					29,000	8,000	37,000	
		182	Poles & Overhead Conductors				29,000				
	02		DMC C TRANSMISSION LINE					29,000	8,000	37,000	
		182	Poles & Overhead Conductors				29,000				
	03		WCC03A TRANSMISSION LINE					29,000	8,000	37,000	
		182	Poles & Overhead Conductors				29,000				
	04		WCC09A TRANSMISSION LINE					29,000	8,000	37,000	
		182	Poles & Overhead Conductors				29,000				
	05		WCC10B TRANSMISSION LINE					29,000	8,000	37,000	
		182	Poles & Overhead Conductors				29,000				
	06		WCC06D TRANSMISSION LINE					83,000	22,000	105,000	
		182	Poles & Overhead Conductors				83,000				
	07		WCC03B TRANSMISSION LINE					29,000	8,000	37,000	
		182	Poles & Overhead Conductors				29,000				
	08		WCC11D TRANSMISSION LINE					29,000	8,000	37,000	
		182	Poles & Overhead Conductors				29,000				

PROJECT COST ESTIMATE

PROJECT: Central Valley Project	PREPARED BY: Regional Office, Sacramento, CA
DIVISION: West San Joaquin Division	ESTIMATE DATE: July 2007 (Revised after DEC)
UNIT: San Luis Unit -- Drainage Impaired Alternative	ESTIMATE TYPE: Feasibility
FEATURE: Drainage Feature Re-Evaluation Feasibility Study	PRICE LEVEL: April 2006

PROPERTY CLASS	IDENTIFIED PROPERTY	PLANT ACCOUNT	DESCRIPTION	ORIGINAL FIELD COST	NEW INDEX	OLD INDEX	CURRENT FIELD COST	TOTAL FIELD COST	NONCONTRACT COST	CONSTRUCTION COST	TOTAL CONSTRUCTION COST
			NORTHERLY AREA (continued)								
13			TRANSMISSION LINES (continued)								
	09		WCC02A TRANSMISSION LINE					29,000	8,000	37,000	
		182	Poles & Overhead Conductors				29,000				
	10		WCC01C TRANSMISSION LINE					140,000	40,000	180,000	
		182	Poles & Overhead Conductors				140,000				
	11		FC5 a/b TRANSMISSION LINE					29,000	8,000	37,000	
		182	Poles & Overhead Conductors				29,000				
	12		PCC16D TRANSMISSION LINE					29,000	8,000	37,000	
		182	Poles & Overhead Conductors				29,000				
	13		PCC06D TRANSMISSION LINE					29,000	8,000	37,000	
		182	Poles & Overhead Conductors				29,000				
	14		PE-14 TRANSMISSION LINE					250,000	70,000	320,000	
		182	Poles & Overhead Conductors				250,000				
	15		NORTHERLY AREA TREATMENT PLANT TRANSMISSION LINE					29,000	8,000	37,000	
		182	Poles & Overhead Conductors				29,000				
15			GENERAL PROPERTY					2,420,000	680,000	3,100,000	3,100,000
	01		SCADA ELECTRICAL & CONTROL EQUIPMENT					2,420,000	680,000	3,100,000	
		100	Land and Rights								
		180	Installed Supervisory Control and Communications Equipment				2,420,000				

CONSTRUCTION COST ESTIMATE

PROJECT: Central Valley Project	PREPARED BY: Regional Office, Sacramento, CA
DIVISION: West San Joaquin Division	ESTIMATE DATE: July 2007 (Revised after DEC)
UNIT: San Luis Unit -- Drainage System -- Land Retirement	ESTIMATE TYPE: Feasibility
FEATURE: Drainage Feature Re-Evaluation Feasibility Study	PRICE LEVEL: April 2006

PROPERTY CLASS	IDENTIFIED PROPERTY	PLANT ACCOUNT	ITEM	DESCRIPTION	QUANTITY	UNIT	PRICE	AMOUNT	FIELD COST	TOTAL FIELD COST	NONCONTRACT COST	CONSTRUCTION COST
				DRAINAGE IMPAIRED LAND RETIREMENT - TOTAL PROJECT COST						1,200,000,000	50,000,000	1,250,000,000
15				GENERAL PROPERTY						1,200,000,000	50,000,000	1,250,000,000
	01			RETIRED LAND - This represents land that will be retired under the drainage impaired alternative.						1,200,000,000	50,000,000	1,250,000,000
		100		Land and Rights					1,200,000,000			
			1	Seasonal Crop Land - Fee	247,500	Ac	4,000.00	990,000,000				
			2	Permanent Crop Land - Fee	2,700	Ac	13,300.00	35,910,000				
			3	Mixed Built Land - Fee	1,700	Ac	15,000.00	25,500,000				
			4	Undeveloped - Fee	11,994	Ac	2,100.00	25,187,400				
			5	Unlisted Items (+/- 5%)				73,402,600				
				Subtotal				1,150,000,000				
				Contingencies (+/- 5%)				50,000,000				
				Field Cost - Land and Rights				1,200,000,000				
				NON CONTRACTS (+/- 5%)							50,000,000	

CONSTRUCTION COST ESTIMATE

PROJECT: Central Valley Project	PREPARED BY: Regional Office, Sacramento, CA
DIVISION: West San Joaquin Division	ESTIMATE DATE: July 2007 (Rvised after DEC)
UNIT: San Luis Unit -- Drainage System -- Northerly Area	ESTIMATE TYPE: Feasibility
FEATURE: Drainage Feature Re-Evaluation Feasibility Study	PRICE LEVEL: April 2006

PROPERTY CLASS	IDENTIFIED PROPERTY	PLANT ACCOUNT	ITEM	DESCRIPTION	QUANTITY	UNIT	PRICE	AMOUNT	FIELD COST	TOTAL FIELD COST	NONCONTRACT COST	CONSTRUCTION COST
				NORTHERLY AREA - TOTAL PROJECT COST						775,907,000	212,242,000	988,149,000
03				PUMPING PLANTS						67,674,000	18,226,000	85,900,000
	01			PUMPING PLANT DMC A/B - This plant is located near the Delta						307,000	83,000	390,000
				Mendota Canal, it is rated at 15 hp; Q = 865 GPM; TDH = 40 ft.								
		100		Land and Rights								
				Costs of Land and Rights have been included with other features.								
		160		Pumps and Prime Movers					260,000			
			1	Vertical Turbine Unit; 2-stg; 1170 rpm; Rated 865 gpm; TDH=40 ft.	2,600	lb	65.00	169,000				
				W/ vert Induction motor @ 15 hp; 1200 rpm; 3ph / 60 hz / 460 v								
			2	Mobilization (+/- 5%)				8,450				
			3	Unlisted Items (+/- 15%)				26,618				
			4	Allowance for Procurement Strategies (+/- 5%)				5,933				
				Subtotal				210,000				
				Contingencies (+/- 20%)				50,000				
				Field Cost - Pumps and Prime Movers				260,000				

CONSTRUCTION COST ESTIMATE

PROJECT: Central Valley Project	PREPARED BY: Regional Office, Sacramento, CA
DIVISION: West San Joaquin Division	ESTIMATE DATE: July 2007 (Rvised after DEC)
UNIT: San Luis Unit -- Drainage System -- Northerly Area	ESTIMATE TYPE: Feasibility
FEATURE: Drainage Feature Re-Evaluation Feasibility Study	PRICE LEVEL: April 2006

PROPERTY CLASS	IDENTIFIED PROPERTY	PLANT ACCOUNT	ITEM	DESCRIPTION	QUANTITY	UNIT	PRICE	AMOUNT	FIELD COST	TOTAL FIELD COST	NONCONTRACT COST	CONSTRUCTION COST
03	01			PUMPING PLANT DMC A/B (continued)								
		170		Accessory Electrical Equipment					47,000			
			1	F&I PVC coated rigid steel conduit - 3/4 Inch	100	ft	15.00	1,500				
			2	F&I PVC coated rigid steel conduit - 2 Inch	150	ft	31.00	4,650				
			3	F&I single conductor - 12 AWG	200	ft	2.50	500				
			4	F&I single conductor - 10 AWG	200	ft	3.00	600				
			5	F&I single conductor - 1 AWG	200	ft	5.50	1,100				
			6	F&I grounding system - 4/0 bare copper	200	ft	12.00	2,400				
			7	F&I grounding system - 3/4" dia. 10 foot ground rod	8	ea	175.00	1,400				
			8	F&I Distribution Board w/ enclosure, trips, & A frames	1	ls	2,550.00	2,550				
			9	F&I transformer and load center, w/ enclosure, breakers, and	1	ea	4,000.00	4,000				
				7.5 KVA, single phase, 480V-240/120 V								
			10	F&I Control board for main pump, w/enclosure, relays, switches,	1	ls	10,000.00	10,000				
				fuse block, terminal block, & 15 hp motor starter								
			11	Furnish and install 100A, 480V, 3 Phase meter socket	1	ea	500.00	500				
			12	Furnish and install 100A, 600V, 3 Phase fused disconnect switch	1	ea	1,500.00	1,500				
			13	Mobilization (+/- 5%)				1,535				
			14	Unlisted Items (+/- 15%)				4,835				
			15	Allowance for Procurement Strategies (+/- 5%)				1,930				
				Subtotal				39,000				
				Contingencies (+/- 20%)				8,000				
				Field Cost - Accessory Electrical Equipment				47,000				
				FACILITATING SERVICES (2%)								
				INVESTIGATIONS (3%)								
				DESIGNS & SPECIFICATIONS (10%)								
				CONSTRUCTION SUPERVISION (12%)								
				OTHER COSTS (+/- 27%)							83,000	

CONSTRUCTION COST ESTIMATE

PROJECT: Central Valley Project	PREPARED BY: Regional Office, Sacramento, CA
DIVISION: West San Joaquin Division	ESTIMATE DATE: July 2007 (Rvised after DEC)
UNIT: San Luis Unit -- Drainage System -- Northerly Area	ESTIMATE TYPE: Feasibility
FEATURE: Drainage Feature Re-Evaluation Feasibility Study	PRICE LEVEL: April 2006

PROPERTY CLASS	IDENTIFIED PROPERTY	PLANT ACCOUNT	ITEM	DESCRIPTION	QUANTITY	UNIT	PRICE	AMOUNT	FIELD COST	TOTAL FIELD COST	NONCONTRACT COST	CONSTRUCTION COST
03	02			PUMPING PLANT DMC C - This plant is located near the Delta						323,000	87,000	410,000
				Mendota Canal, it is rated at 40 hp; Q = 1395 GPM; TDH = 75 ft.								
		100		Land and Rights								
				Costs of Land and Rights have been included with other features.								
		160		Pumps and Prime Movers					270,000			
			1	Vertical Turbine Unit; 1-stg; 1170 rpm; Rated 1395 gpm; TDH=75 ft.	3,230	lb	55.00	177,650				
				W/ vert Induction motor @ 40 hp; 1800 rpm; 3ph / 60 hz / 460 v								
			2	Mobilization (+/- 5%)				8,883				
			3	Unlisted Items (+/- 15%)				27,980				
			4	Allowance for Procurement Strategies (+/- 5%)				15,488				
				Subtotal				230,000				
				Contingencies (+/- 20%)				40,000				
				Field Cost - Pumps and Prime Movers				270,000				
		170		Accessory Electrical Equipment					53,000			
			1	F&I PVC coated rigid steel conduit - 3/4 Inch	50	ft	15.00	750				
			2	F&I PVC coated rigid steel conduit - 2 Inch	100	ft	31.00	3,100				
			3	F&I single conductor - 12 AWG	200	ft	2.50	500				
			4	F&I single conductor - 4 AWG	200	ft	4.00	800				
			5	F&I single conductor - 4/0 AWG	200	ft	15.00	3,000				
			6	F&I grounding system - 4/0 bare copper	200	ft	12.00	2,400				
			7	F&I grounding system - 3/4" dia. 10 foot ground rod	8	ea	175.00	1,400				
			8	F&I Distribution Board w/ enclosure, trips, & A frames	1	ls	5,816.00	5,816				
			9	F&I transformer and load center, w/ enclosure, breakers, and	1	ea	4,000.00	4,000				
				7.5 KVA, single phase, 480V-240/120 V								
			10	F&I Control board for main pump, w/enclosure, relays, switches,	1	ls	11,000.00	11,000				
				fuse block, terminal block, & 40 hp motor starter								
			11	Furnish and install 100A, 480V, 3 Phase meter socket	1	ea	500.00	500				
			12	Furnish and install 100A, 600V, 3 Phase fused disconnect switch	1	ea	1,500.00	1,500				

CONSTRUCTION COST ESTIMATE

PROJECT: Central Valley Project	PREPARED BY: Regional Office, Sacramento, CA
DIVISION: West San Joaquin Division	ESTIMATE DATE: July 2007 (Rvised after DEC)
UNIT: San Luis Unit -- Drainage System -- Northerly Area	ESTIMATE TYPE: Feasibility
FEATURE: Drainage Feature Re-Evaluation Feasibility Study	PRICE LEVEL: April 2006

PROPERTY CLASS	IDENTIFIED PROPERTY	PLANT ACCOUNT	ITEM	DESCRIPTION	QUANTITY	UNIT	PRICE	AMOUNT	FIELD COST	TOTAL FIELD COST	NONCONTRACT COST	CONSTRUCTION COST
03	02			PUMPING PLANT DMC C (continued)								
		170		Accessory Electrical Equipment (continued)								
			13	Mobilization (+/- 5%)				1,738				
			14	Unlisted Items (+/- 15%)				5,476				
			15	Allowance for Procurement Strategies (+/- 5%)				2,020				
				Subtotal				44,000				
				Contingencies (+/- 20%)				9,000				
				Field Cost - Accessory Electrical Equipment				53,000				
				FACILITATING SERVICES (2%)								
				INVESTIGATIONS (3%)								
				DESIGNS & SPECIFICATIONS (10%)								
				CONSTRUCTION SUPERVISION (12%)								
				OTHER COSTS (+/- 27%)							87,000	

CONSTRUCTION COST ESTIMATE

PROJECT: Central Valley Project	PREPARED BY: Regional Office, Sacramento, CA
DIVISION: West San Joaquin Division	ESTIMATE DATE: July 2007 (Rvised after DEC)
UNIT: San Luis Unit -- Drainage System -- Northerly Area	ESTIMATE TYPE: Feasibility
FEATURE: Drainage Feature Re-Evaluation Feasibility Study	PRICE LEVEL: April 2006

PROPERTY CLASS	IDENTIFIED PROPERTY	PLANT ACCOUNT	ITEM	DESCRIPTION	QUANTITY	UNIT	PRICE	AMOUNT	FIELD COST	TOTAL FIELD COST	NONCONTRACT COST	CONSTRUCTION COST
03	03			PUMPING PLANT WCC03A - This plant serves reuse areas PO1, PO2,						5,223,000	1,377,000	6,600,000
				PO3, and PO6. It is rated at 200 hp; Q = 4200 GPM; TDH = 262 ft.								
		100		Land and Rights								
				Costs of Land and Rights have been included with other features.								
		130		Structures and Improvements					2,100,000			
			1	Excavation, common	4,031	cy	15.00	60,465				
			2	Backfill, common	3,830	cy	10.00	38,300				
			3	Compacted backfill, common	3,830	cy	10.00	38,300				
			4	Gravel surfacing	111	cy	65.00	7,215				
			5	Unwatering/dewatering, 13.8' depth (5 month duration)	1	ls	1,000,000.00	1,000,000				
			6	Concrete	155	cy	1,000.00	155,000				
			7	Furnishing and handling cement	44	ton	170.00	7,480				
			8	Furnishing and placing reinforcement	23,116	lb	1.75	40,453				
			9	Chain link fencing	329	lf	30.00	9,870				
			10	CMU Wall (8' high, 11 lf long)	88	sf	100.00	8,800				
			11	Structural Steel - Sunshades (12' x 27'; 9,283 lbs)	1	ea	20,000.00	20,000				
			12	Mobilization (+/- 5%)				69,294				
			13	Unlisted Items (+/- 15%)				218,277				
			14	Allowance for Procurement Strategies (+/- 5%)				76,546				
				Subtotal				1,750,000				
				Contingencies (+/- 20%)				350,000				
				Field Cost - Structures and Improvements				2,100,000				

CONSTRUCTION COST ESTIMATE

PROJECT: Central Valley Project	PREPARED BY: Regional Office, Sacramento, CA
DIVISION: West San Joaquin Division	ESTIMATE DATE: July 2007 (Rvised after DEC)
UNIT: San Luis Unit -- Drainage System -- Northerly Area	ESTIMATE TYPE: Feasibility
FEATURE: Drainage Feature Re-Evaluation Feasibility Study	PRICE LEVEL: April 2006

PROPERTY CLASS	IDENTIFIED PROPERTY	PLANT ACCOUNT	ITEM	DESCRIPTION	QUANTITY	UNIT	PRICE	AMOUNT	FIELD COST	TOTAL FIELD COST	NONCONTRACT COST	CONSTRUCTION COST
03	03			PUMPING PLANT WCC03A (continued)								
		152		Waterways					150,000			
			1	Steel piping & flanges for manifold	4,788	lb	6.00	28,728				
			2	Motor Op. BFV; Class 150; D=12"; 445 lb/valve	2	ea	22,500.00	45,000				
			3	Tilt Disk Ck. Valve; Class 125; D=12"; 650 lb/valve	2	ea	11,000.00	22,000				
			4	Ball Valve for AV; D=2"; 2 lbs/valve	4	ea	300.00	1,200				
			5	Air Valves; D=2"; 75 lbs/valve	4	ea	600.00	2,400				
			6	Mobilization (+/- 5%)				4,966				
			7	Unlisted Items (+/- 15%)				15,644				
			8	Allowance for Procurement Strategies (+/- 5%)				5,061				
				Subtotal				125,000				
				Contingencies (+/- 20%)				25,000				
				Field Cost - Waterways				150,000				
		153		Waterways Structures					1,823,000			
				(1) Flow Meter					23,000			
			1	Pipe Flowmeter; D = 20"	1	ea	15,000.00	15,000				
			2	Mobilization (+/- 5%)				750				
			3	Unlisted Items (+/- 15%)				2,363				
			4	Allowance for Procurement Strategies (+/- 5%)				888				
				Subtotal				19,000				
				Contingencies (+/- 20%)				4,000				
				Field Cost - (1) Flow Meter				23,000				

CONSTRUCTION COST ESTIMATE

PROJECT: Central Valley Project	PREPARED BY: Regional Office, Sacramento, CA
DIVISION: West San Joaquin Division	ESTIMATE DATE: July 2007 (Rvised after DEC)
UNIT: San Luis Unit -- Drainage System -- Northerly Area	ESTIMATE TYPE: Feasibility
FEATURE: Drainage Feature Re-Evaluation Feasibility Study	PRICE LEVEL: April 2006

PROPERTY CLASS	IDENTIFIED PROPERTY	PLANT ACCOUNT	ITEM	DESCRIPTION	QUANTITY	UNIT	PRICE	AMOUNT	FIELD COST	TOTAL FIELD COST	NONCONTRACT COST	CONSTRUCTION COST
03	03			PUMPING PLANT WCC03A (continued)								
		153		Waterways Structures (continued)								
				(2) Regulating Tank; D = 60 ft; H = 20 ft					1,800,000			
			1	Strip and Clear, 12" depth	400	cy	6.50	2,600				
			2	Compacting embankment	850	cy	15.00	12,750				
			3	Gravel surfacing	130	cy	65.00	8,450				
			4	Concrete	340	cy	1,000.00	340,000				
			5	Cement	95	ton	170.00	16,150				
			6	Reinforcement	50,000	lb	1.75	87,500				
			7	Chain link fence	400	lf	30.00	12,000				
			8	Precast Concrete Piles, 12" x 12" (reinforced, 60 ft deep)	70	ea	4,000.00	280,000				
			9	F&I Steel Regulating Tank; D=60 ft; H=20 ft; w/ roof	1	ea	425,000.00	425,000				
			10	Mobilization (+/- 5%)				59,223				
			11	Unlisted Items (+/- 15%)				186,551				
			12	Allowance for Procurement Strategies (+/- 5%)				69,777				
				Subtotal				1,500,000				
				Contingencies (+/- 20%)				300,000				
				Field Cost - (2) Regulating Tank				1,800,000				
				Field Cost - Waterway Structures				1,823,000				
		154		Waterway Protective Works					240,000			
			1	Air Chamber; D=15 ft.; cylindrical shaped; 22,800 lbs	1	ea	160,000.00	160,000				
			2	Mobilization (+/- 5%)				8,000				
			3	Unlisted Items (+/- 15%)				25,200				
			4	Allowance for Procurement Strategies (+/- 5%)				6,800				
				Subtotal				200,000				
				Contingencies (+/- 20%)				40,000				
				Field Cost - Waterway Protective Works				240,000				

CONSTRUCTION COST ESTIMATE

PROJECT: Central Valley Project	PREPARED BY: Regional Office, Sacramento, CA
DIVISION: West San Joaquin Division	ESTIMATE DATE: July 2007 (Rvised after DEC)
UNIT: San Luis Unit -- Drainage System -- Northerly Area	ESTIMATE TYPE: Feasibility
FEATURE: Drainage Feature Re-Evaluation Feasibility Study	PRICE LEVEL: April 2006

PROPERTY CLASS	IDENTIFIED PROPERTY	PLANT ACCOUNT	ITEM	DESCRIPTION	QUANTITY	UNIT	PRICE	AMOUNT	FIELD COST	TOTAL FIELD COST	NONCONTRACT COST	CONSTRUCTION COST
03	03			PUMPING PLANT WCC03A (continued)								
		160		Pumps and Prime Movers					630,000			
			1	2 Vertical Turbine Units; 3-stg; 1180 rpm; Rated 2100 gpm; TDH=131 ft.	9,200	lb	45.00	414,000				
				W/ 2 vert Induction motors @ 100 hp; 1800 rpm; 3ph / 60 hz / 460 v								
			2	Mobilization (+/- 5%)				20,700				
			3	Unlisted Items (+/- 15%)				65,205				
			4	Allowance for Procurement Strategies (+/- 5%)				20,095				
				Subtotal				520,000				
				Contingencies (+/- 20%)				110,000				
				Field Cost - Pumps and Prime Movers				630,000				
		170		Accessory Electrical Equipment					170,000			
			1	F&I PVC coated rigid steel conduit - 3/4 Inch	100	ft	15.00	1,500				
			2	F&I PVC coated rigid steel conduit - 2 Inch	150	ft	31.00	4,650				
			3	F&I single conductor - 12 AWG	400	ft	2.50	1,000				
			4	F&I single conductor - 4/0 AWG	200	ft	15.00	3,000				
			5	F&I single conductor - 3 AWG	300	ft	6.00	1,800				
			6	F&I single conductor - 6 AWG GND	100	ft	4.50	450				
			7	F&I grounding system - 4/0 bare copper	200	ft	12.00	2,400				
			8	F&I grounding system - 3/4" dia. 10 foot ground rod	8	ea	175.00	1,400				
			9	F&I Distribution Board w/ enclosure, trips, & A frames	1	ls	2,650.00	2,650				
			10	F&I transformer and load center, w/ enclosure, breakers, and	1	ea	4,000.00	4,000				
				7.5 KVA, single phase, 480V-240/120 V								
			11	F&I Control board for main pump, w/enclosure, relays, switches,	1	ls	90,000.00	90,000				
				fuse block, terminal block, & two 100 hp motor starters								
			12	Mobilization (+/- 5%)				5,643				
			13	Unlisted Items (+/- 15%)				17,774				

CONSTRUCTION COST ESTIMATE

PROJECT: Central Valley Project	PREPARED BY: Regional Office, Sacramento, CA
DIVISION: West San Joaquin Division	ESTIMATE DATE: July 2007 (Rvised after DEC)
UNIT: San Luis Unit -- Drainage System -- Northerly Area	ESTIMATE TYPE: Feasibility
FEATURE: Drainage Feature Re-Evaluation Feasibility Study	PRICE LEVEL: April 2006

PROPERTY CLASS	IDENTIFIED PROPERTY	PLANT ACCOUNT	ITEM	DESCRIPTION	QUANTITY	UNIT	PRICE	AMOUNT	FIELD COST	TOTAL FIELD COST	NONCONTRACT COST	CONSTRUCTION COST
03	03			PUMPING PLANT WCC03A (continued)								
		170		Accessory Electrical Equipment (continued)								
			14	Allowance for Procurement Strategies (+/- 5%)				8,734				
				Subtotal				145,000				
				Contingencies (+/- 20%)				25,000				
				Field Cost - Accessory Electrical Equipment				170,000				
		175		Station Equipment					110,000			
			1	Oil filled, distribution power transformer, 1000 kVA; 12.47kV-480V	1	ea	40,000.00	40,000				
			2	7.65-kV MCOV metal oxide distribution class arrester	3	ea	2,000.00	6,000				
			3	3-phase, 15-kV fused disconnect switch, 30E-50E	1	ea	25,000.00	25,000				
			4	Mobilization (+/- 5%)				3,550				
			5	Unlisted Items (+/- 15%)				11,183				
			6	Allowance for Procurement Strategies (+/- 5%)				4,268				
				Subtotal				90,000				
				Contingencies (+/- 20%)				20,000				
				Field Cost - Station Equipment				110,000				
				FACILITATING SERVICES (2%)								
				INVESTIGATIONS (3%)								
				DESIGNS & SPECIFICATIONS (10%)								
				CONSTRUCTION SUPERVISION (12%)								
				OTHER COSTS (+/- 27%)							1,377,000	

CONSTRUCTION COST ESTIMATE

PROJECT: Central Valley Project	PREPARED BY: Regional Office, Sacramento, CA
DIVISION: West San Joaquin Division	ESTIMATE DATE: July 2007 (Rvised after DEC)
UNIT: San Luis Unit -- Drainage System -- Northerly Area	ESTIMATE TYPE: Feasibility
FEATURE: Drainage Feature Re-Evaluation Feasibility Study	PRICE LEVEL: April 2006

PROPERTY CLASS	IDENTIFIED PROPERTY	PLANT ACCOUNT	ITEM	DESCRIPTION	QUANTITY	UNIT	PRICE	AMOUNT	FIELD COST	TOTAL FIELD COST	NONCONTRACT COST	CONSTRUCTION COST
03	04			PUMPING PLANT WCC09A - This plant serves reuse areas PE8 and						5,151,000	1,349,000	6,500,000
				PE9. It is rated at 120 hp; Q = 4200 GPM; TDH = 262 ft.								
		100		Land and Rights								
				Costs of Land and Rights have been included with other features.								
		130		Structures and Improvements					2,100,000			
			1	Excavation, common	3,930	cy	15.00	58,950				
			2	Backfill, common	3,739	cy	10.00	37,390				
			3	Compacted backfill, common	3,739	cy	10.00	37,390				
			4	Gravel surfacing	102	cy	65.00	6,630				
			5	Unwatering/dewatering, 13.8' depth (5 month duration)	1	ls	1,000,000.00	1,000,000				
			6	Concrete	145	cy	1,000.00	145,000				
			7	Furnishing and handling cement	41	ton	170.00	6,970				
			8	Furnishing and placing reinforcement	21,616	lb	1.75	37,828				
			9	Chain link fencing	315	lf	30.00	9,450				
			10	CMU Wall (8' high, 11 lf long)	88	sf	100.00	8,800				
			11	Structural Steel - Sunshades (12' x 27'; 9,283 lbs)	1	ea	20,000.00	20,000				
			12	Mobilization (+/- 5%)				68,420				
			13	Unlisted Items (+/- 15%)				215,524				
			14	Allowance for Procurement Strategies (+/- 5%)				97,647				
				Subtotal				1,750,000				
				Contingencies (+/- 20%)				350,000				
				Field Cost - Structures and Improvements				2,100,000				

CONSTRUCTION COST ESTIMATE

PROJECT: Central Valley Project	PREPARED BY: Regional Office, Sacramento, CA
DIVISION: West San Joaquin Division	ESTIMATE DATE: July 2007 (Rvised after DEC)
UNIT: San Luis Unit -- Drainage System -- Northerly Area	ESTIMATE TYPE: Feasibility
FEATURE: Drainage Feature Re-Evaluation Feasibility Study	PRICE LEVEL: April 2006

PROPERTY CLASS	IDENTIFIED PROPERTY	PLANT ACCOUNT	ITEM	DESCRIPTION	QUANTITY	UNIT	PRICE	AMOUNT	FIELD COST	TOTAL FIELD COST	NONCONTRACT COST	CONSTRUCTION COST
03	04			PUMPING PLANT WCC09A (continued)								
		152		Waterways					150,000			
			1	Steel piping & flanges for manifold	4,692	lb	6.00	28,152				
			2	Motor Op. BFV; Class 150; D=12"; 445 lb/valve	2	ea	22,500.00	45,000				
			3	Tilt Disk Ck. Valve; Class 125; D=12"; 650 lb/valve	2	ea	11,000.00	22,000				
			4	Ball Valve for AV; D=2"; 2 lbs/valve	4	ea	300.00	1,200				
			5	Air Valves; D=2"; 75 lbs/valve	4	ea	600.00	2,400				
			6	Mobilization (+/- 5%)				4,938				
			7	Unlisted Items (+/- 15%)				15,553				
			8	Allowance for Procurement Strategies (+/- 5%)				5,757				
				Subtotal				125,000				
				Contingencies (+/- 20%)				25,000				
				Field Cost - Waterways				150,000				
		153		Waterway Structures					1,768,000			
				(1) Flow Meter					18,000			
			1	Pipe Flowmeter; D = 14"	1	ea	12,000.00	12,000				
			2	Mobilization (+/- 5%)				600				
			3	Unlisted Items (+/- 15%)				1,890				
			4	Allowance for Procurement Strategies (+/- 5%)				510				
				Subtotal				15,000				
				Contingencies (+/- 20%)				3,000				
				Field Cost - (1) Flow Meter				18,000				

CONSTRUCTION COST ESTIMATE

PROJECT: Central Valley Project	PREPARED BY: Regional Office, Sacramento, CA
DIVISION: West San Joaquin Division	ESTIMATE DATE: July 2007 (Rvised after DEC)
UNIT: San Luis Unit -- Drainage System -- Northerly Area	ESTIMATE TYPE: Feasibility
FEATURE: Drainage Feature Re-Evaluation Feasibility Study	PRICE LEVEL: April 2006

PROPERTY CLASS	IDENTIFIED PROPERTY	PLANT ACCOUNT	ITEM	DESCRIPTION	QUANTITY	UNIT	PRICE	AMOUNT	FIELD COST	TOTAL FIELD COST	NONCONTRACT COST	CONSTRUCTION COST
03	04			PUMPING PLANT WCC09A (continued)								
		153		Waterway Structures (continued)								
				(2) Regulating Tank; D = 60 ft; H = 19 ft					1,750,000			
			1	Strip and Clear, 12" depth	400	cy	6.50	2,600				
			2	Compacting embankment	850	cy	15.00	12,750				
			3	Gravel surfacing	130	cy	65.00	8,450				
			4	Concrete	340	cy	1,000.00	340,000				
			5	Cement	95	ton	170.00	16,150				
			6	Reinforcement	50,000	lb	1.75	87,500				
			7	Chain link fence	400	lf	30.00	12,000				
			8	Precast Concrete Piles, 12" x 12" (reinforced, 60 ft deep)	70	ea	4,000.00	280,000				
			9	F&I Steel Regulating Tank; D=60 ft; H=19 ft; w/ roof	1	ea	400,000.00	400,000				
			10	Mobilization (+/- 5%)				57,973				
			11	Unlisted Items (+/- 15%)				182,613				
			12	Allowance for Procurement Strategies (+/- 5%)				49,964				
				Subtotal				1,450,000				
				Contingencies (+/- 20%)				300,000				
				Field Cost - (2) Regulating Tank				1,750,000				
				Field Cost - Waterway Structures				1,768,000				
		154		Waterway Protective Works					240,000			
			1	Air Chamber; D=15 ft.; cylindrical shaped; 22,800 lbs	1	ea	160,000.00	160,000				
			2	Mobilization (+/- 5%)				8,000				
			3	Unlisted Items (+/- 15%)				25,200				
			4	Allowance for Procurement Strategies (+/- 5%)				6,800				
				Subtotal				200,000				
				Contingencies (+/- 20%)				40,000				
				Field Cost - Waterway Protective Works				240,000				

CONSTRUCTION COST ESTIMATE

PROJECT: Central Valley Project	PREPARED BY: Regional Office, Sacramento, CA
DIVISION: West San Joaquin Division	ESTIMATE DATE: July 2007 (Rvised after DEC)
UNIT: San Luis Unit -- Drainage System -- Northerly Area	ESTIMATE TYPE: Feasibility
FEATURE: Drainage Feature Re-Evaluation Feasibility Study	PRICE LEVEL: April 2006

PROPERTY CLASS	IDENTIFIED PROPERTY	PLANT ACCOUNT	ITEM	DESCRIPTION	QUANTITY	UNIT	PRICE	AMOUNT	FIELD COST	TOTAL FIELD COST	NONCONTRACT COST	CONSTRUCTION COST
03	04			PUMPING PLANT WCC09A (continued)								
		160		Pumps and Prime Movers					630,000			
			1	2 Vertical Turbine Units; 3-stg; 1180 rpm; Rated 2100 gpm; TDH=131 ft.	9,200	lb	45.00	414,000				
				W/ 2 vert Induction motors @ 60 hp; 1800 rpm; 3ph / 60 hz / 460 v								
			2	Mobilization (+/- 5%)				20,700				
			3	Unlisted Items (+/- 15%)				65,205				
			4	Allowance for Procurement Strategies (+/- 5%)				20,095				
				Subtotal				520,000				
				Contingencies (+/- 20%)				110,000				
				Field Cost - Pumps and Prime Movers				630,000				
		170		Accessory Electrical Equipment					170,000			
			1	F&I PVC coated rigid steel conduit - 3/4 Inch	100	ft	15.00	1,500				
			2	F&I PVC coated rigid steel conduit - 2 Inch	150	ft	31.00	4,650				
			3	F&I single conductor - 12 AWG	400	ft	2.50	1,000				
			4	F&I single conductor - 4/0 AWG	200	ft	15.00	3,000				
			5	F&I single conductor - 3 AWG	300	ft	6.00	1,800				
			6	F&I single conductor - 6 AWG GND	100	ft	4.50	450				
			7	F&I grounding system - 4/0 bare copper	200	ft	12.00	2,400				
			8	F&I grounding system - 3/4" dia. 10 foot ground rod	8	ea	175.00	1,400				
			9	F&I Distribution Board w/ enclosure, trips, & A frames	1	ls	2,650.00	2,650				
			10	F&I transformer and load center, w/ enclosure, breakers, and	1	ea	4,000.00	4,000				
				7.5 KVA, single phase, 480V-240/120 V								
			11	F&I Control board for main pump, w/enclosure, relays, switches,	1	ls	90,000.00	90,000				
				fuse block, terminal block, & two 100 hp motor starters								
			12	Mobilization (+/- 5%)				5,643				
			13	Unlisted Items (+/- 15%)				17,774				

CONSTRUCTION COST ESTIMATE

PROJECT: Central Valley Project	PREPARED BY: Regional Office, Sacramento, CA
DIVISION: West San Joaquin Division	ESTIMATE DATE: July 2007 (Rvised after DEC)
UNIT: San Luis Unit -- Drainage System -- Northerly Area	ESTIMATE TYPE: Feasibility
FEATURE: Drainage Feature Re-Evaluation Feasibility Study	PRICE LEVEL: April 2006

PROPERTY CLASS	IDENTIFIED PROPERTY	PLANT ACCOUNT	ITEM	DESCRIPTION	QUANTITY	UNIT	PRICE	AMOUNT	FIELD COST	TOTAL FIELD COST	NONCONTRACT COST	CONSTRUCTION COST
03	04			PUMPING PLANT WCC09A (continued)								
		170		Accessory Electrical Equipment (continued)								
			14	Allowance for Procurement Strategies (+/- 5%)				8,734				
				Subtotal				145,000				
				Contingencies (+/- 20%)				25,000				
				Field Cost - Accessory Electrical Equipment				170,000				
		175		Station Equipment					93,000			
			1	Oil filled, distribution power transformer, 300 kVA; 12.47kV-480V	1	ea	30,000.00	30,000				
			2	7.65-kV MCOV metal oxide distribution class arrester	3	ea	2,000.00	6,000				
			3	3-phase, 15-kV fused disconnect switch, 10E-15E	1	ea	25,000.00	25,000				
			4	Mobilization (+/- 5%)				3,050				
			5	Unlisted Items (+/- 15%)				9,608				
			6	Allowance for Procurement Strategies (+/- 5%)				3,343				
				Subtotal				77,000				
				Contingencies (+/- 20%)				16,000				
				Field Cost - Station Equipment				93,000				
				FACILITATING SERVICES (2%)								
				INVESTIGATIONS (3%)								
				DESIGNS & SPECIFICATIONS (10%)								
				CONSTRUCTION SUPERVISION (12%)								
				OTHER COSTS (+/- 27%)							1,349,000	

CONSTRUCTION COST ESTIMATE

PROJECT: Central Valley Project	PREPARED BY: Regional Office, Sacramento, CA
DIVISION: West San Joaquin Division	ESTIMATE DATE: July 2007 (Rvised after DEC)
UNIT: San Luis Unit -- Drainage System -- Northerly Area	ESTIMATE TYPE: Feasibility
FEATURE: Drainage Feature Re-Evaluation Feasibility Study	PRICE LEVEL: April 2006

PROPERTY CLASS	IDENTIFIED PROPERTY	PLANT ACCOUNT	ITEM	DESCRIPTION	QUANTITY	UNIT	PRICE	AMOUNT	FIELD COST	TOTAL FIELD COST	NONCONTRACT COST	CONSTRUCTION COST
03	05			PUMPING PLANT WCC10B - Plant serves reuse areas FC5-2, FC5-3,						3,408,000	892,000	4,300,000
				PE10, and PE11. It is rated at 120 hp; Q = 4200 GPM; TDH = 262 ft.								
		100		Land and Rights								
				Costs of Land and Rights have been included with other features.								
		130		Structures and Improvements					2,100,000			
			1	Excavation, common	3,930	cy	15.00	58,950				
			2	Backfill, common	3,739	cy	10.00	37,390				
			3	Compacted backfill, common	3,739	cy	10.00	37,390				
			4	Gravel surfacing	102	cy	65.00	6,630				
			5	Unwatering/dewatering, 13.8' depth (5 month duration)	1	ls	1,000,000.00	1,000,000				
			6	Concrete	145	cy	1,000.00	145,000				
			7	Furnishing and handling cement	41	ton	170.00	6,970				
			8	Furnishing and placing reinforcement	21,616	lb	1.75	37,828				
			9	Chain link fencing	315	lf	30.00	9,450				
			10	CMU Wall (8' high, 11 lf long)	88	sf	100.00	8,800				
			11	Structural Steel - Sunshades (12' x 27'; 9,283 lbs)	1	ea	20,000.00	20,000				
			12	Mobilization (+/- 5%)				68,420				
			13	Unlisted Items (+/- 15%)				215,524				
			14	Allowance for Procurement Strategies (+/- 5%)				97,647				
				Subtotal				1,750,000				
				Contingencies (+/- 20%)				350,000				
				Field Cost - Structures and Improvements				2,100,000				

CONSTRUCTION COST ESTIMATE

PROJECT: Central Valley Project	PREPARED BY: Regional Office, Sacramento, CA
DIVISION: West San Joaquin Division	ESTIMATE DATE: July 2007 (Rvised after DEC)
UNIT: San Luis Unit -- Drainage System -- Northerly Area	ESTIMATE TYPE: Feasibility
FEATURE: Drainage Feature Re-Evaluation Feasibility Study	PRICE LEVEL: April 2006

PROPERTY CLASS	IDENTIFIED PROPERTY	PLANT ACCOUNT	ITEM	DESCRIPTION	QUANTITY	UNIT	PRICE	AMOUNT	FIELD COST	TOTAL FIELD COST	NONCONTRACT COST	CONSTRUCTION COST
03	05			PUMPING PLANT WCC10B (continued)								
		152		Waterways					140,000			
			1	Steel piping & flanges for manifold	3,572	lb	6.00	21,432				
			2	Motor Op. BFV; Class 150; D=12"; 445 lb/valve	2	ea	22,500.00	45,000				
			3	Tilt Disk Ck. Valve; Class 125; D=12"; 650 lb/valve	2	ea	11,000.00	22,000				
			4	Ball Valve for AV; D=2"; 2 lbs/valve	4	ea	300.00	1,200				
			5	Air Valves; D=2"; 75 lbs/valve	4	ea	600.00	2,400				
			6	Mobilization (+/- 5%)				4,602				
			7	Unlisted Items (+/- 15%)				14,495				
			8	Allowance for Procurement Strategies (+/- 5%)				3,871				
				Subtotal				115,000				
				Contingencies (+/- 20%)				25,000				
				Field Cost - Waterways				140,000				
		153		Waterway Structures					18,000			
			1	Pipe Flowmeter; D = 14"	1	ea	12,000.00	12,000				
			2	Mobilization (+/- 5%)				600				
			3	Unlisted Items (+/- 15%)				1,890				
			4	Allowance for Procurement Strategies (+/- 5%)				510				
				Subtotal				15,000				
				Contingencies (+/- 20%)				3,000				
				Field Cost - Waterway Structures				18,000				

CONSTRUCTION COST ESTIMATE

PROJECT: Central Valley Project	PREPARED BY: Regional Office, Sacramento, CA
DIVISION: West San Joaquin Division	ESTIMATE DATE: July 2007 (Rvised after DEC)
UNIT: San Luis Unit -- Drainage System -- Northerly Area	ESTIMATE TYPE: Feasibility
FEATURE: Drainage Feature Re-Evaluation Feasibility Study	PRICE LEVEL: April 2006

PROPERTY CLASS	IDENTIFIED PROPERTY	PLANT ACCOUNT	ITEM	DESCRIPTION	QUANTITY	UNIT	PRICE	AMOUNT	FIELD COST	TOTAL FIELD COST	NONCONTRACT COST	CONSTRUCTION COST
03	05			PUMPING PLANT WCC10B (continued)								
		154		Waterway Protective Works					240,000			
			1	Air Chamber; D=15 ft.; cylindrical shaped; 22,800 lbs	1	ea	160,000.00	160,000				
			2	Mobilization (+/- 5%)				8,000				
			3	Unlisted Items (+/- 15%)				25,200				
			4	Allowance for Procurement Strategies (+/- 5%)				6,800				
				Subtotal				200,000				
				Contingencies (+/- 20%)				40,000				
				Field Cost - Waterway Protective Works				240,000				
		160		Pumps and Prime Movers					630,000			
			1	2 Vertical Turbine Units; 3-stg; 1180 rpm; Rated 2100 gpm; TDH=131 ft.	9,200	lb	45.00	414,000				
				W/ 2 vert Induction motors @ 60 hp; 1800 rpm; 3ph / 60 hz / 460 v								
			2	Mobilization (+/- 5%)				20,700				
			3	Unlisted Items (+/- 15%)				65,205				
			4	Allowance for Procurement Strategies (+/- 5%)				20,095				
				Subtotal				520,000				
				Contingencies (+/- 20%)				110,000				
				Field Cost - Pumps and Prime Movers				630,000				
		170		Accessory Electrical Equipment					170,000			
			1	F&I PVC coated rigid steel conduit - 3/4 Inch	100	ft	15.00	1,500				
			2	F&I PVC coated rigid steel conduit - 2 Inch	150	ft	31.00	4,650				
			3	F&I single conductor - 12 AWG	400	ft	2.50	1,000				
			4	F&I single conductor - 4/0 AWG	200	ft	15.00	3,000				
			5	F&I single conductor - 3 AWG	300	ft	6.00	1,800				
			6	F&I single conductor - 6 AWG GND	100	ft	4.50	450				

CONSTRUCTION COST ESTIMATE

PROJECT: Central Valley Project	PREPARED BY: Regional Office, Sacramento, CA
DIVISION: West San Joaquin Division	ESTIMATE DATE: July 2007 (Rvised after DEC)
UNIT: San Luis Unit -- Drainage System -- Northerly Area	ESTIMATE TYPE: Feasibility
FEATURE: Drainage Feature Re-Evaluation Feasibility Study	PRICE LEVEL: April 2006

PROPERTY CLASS	IDENTIFIED PROPERTY	PLANT ACCOUNT	ITEM	DESCRIPTION	QUANTITY	UNIT	PRICE	AMOUNT	FIELD COST	TOTAL FIELD COST	NONCONTRACT COST	CONSTRUCTION COST
03	05			PUMPING PLANT WCC10B (continued)								
		170		Accessory Electrical Equipment (continued)								
			7	F&I grounding system - 4/0 bare copper	200	ft	12.00	2,400				
			8	F&I grounding system - 3/4" dia. 10 foot ground rod	8	ea	175.00	1,400				
			9	F&I Distribution Board w/ enclosure, trips, & A frames	1	ls	2,650.00	2,650				
			10	F&I transformer and load center, w/ enclosure, breakers, and	1	ea	4,000.00	4,000				
				7.5 KVA, single phase, 480V-240/120 V								
			11	F&I Control board for main pump, w/enclosure, relays, switches,	1	ls	90,000.00	90,000				
				fuse block, terminal block, & two 60 hp motor starters								
			12	Mobilization (+/- 5%)				5,643				
			13	Unlisted Items (+/- 15%)				17,774				
			14	Allowance for Procurement Strategies (+/- 5%)				8,734				
				Subtotal				145,000				
				Contingencies (+/- 20%)				25,000				
				Field Cost - Accessory Electrical Equipment				170,000				
		175		Station Equipment					110,000			
			1	Oil filled, distribution power transformer, 1000 kVA; 12.47kV-480V	1	ea	40,000.00	40,000				
			2	7.65-kV MCOV metal oxide distribution class arrester	3	ea	2,000.00	6,000				
			3	3-phase, 15-kV fused disconnect switch, 10E-15E	1	ea	25,000.00	25,000				
			4	Mobilization (+/- 5%)				3,550				
			5	Unlisted Items (+/- 15%)				11,183				

CONSTRUCTION COST ESTIMATE

PROJECT: Central Valley Project	PREPARED BY: Regional Office, Sacramento, CA
DIVISION: West San Joaquin Division	ESTIMATE DATE: July 2007 (Rvised after DEC)
UNIT: San Luis Unit -- Drainage System -- Northerly Area	ESTIMATE TYPE: Feasibility
FEATURE: Drainage Feature Re-Evaluation Feasibility Study	PRICE LEVEL: April 2006

PROPERTY CLASS	IDENTIFIED PROPERTY	PLANT ACCOUNT	ITEM	DESCRIPTION	QUANTITY	UNIT	PRICE	AMOUNT	FIELD COST	TOTAL FIELD COST	NONCONTRACT COST	CONSTRUCTION COST
03	05			PUMPING PLANT WCC10B (continued)								
		175		Station Equipment (continued)								
			6	Allowance for Procurement Strategies (+/- 5%)				4,268				
				Subtotal				90,000				
				Contingencies (+/- 20%)				20,000				
				Field Cost - Station Equipment				110,000				
				FACILITATING SERVICES (2%)								
				INVESTIGATIONS (3%)								
				DESIGNS & SPECIFICATIONS (10%)								
				CONSTRUCTION SUPERVISION (12%)								
				OTHER COSTS (+/- 27%)							892,000	

CONSTRUCTION COST ESTIMATE

PROJECT: Central Valley Project	PREPARED BY: Regional Office, Sacramento, CA
DIVISION: West San Joaquin Division	ESTIMATE DATE: July 2007 (Rvised after DEC)
UNIT: San Luis Unit -- Drainage System -- Northerly Area	ESTIMATE TYPE: Feasibility
FEATURE: Drainage Feature Re-Evaluation Feasibility Study	PRICE LEVEL: April 2006

PROPERTY CLASS	IDENTIFIED PROPERTY	PLANT ACCOUNT	ITEM	DESCRIPTION	QUANTITY	UNIT	PRICE	AMOUNT	FIELD COST	TOTAL FIELD COST	NONCONTRACT COST	CONSTRUCTION COST
03	06			PUMPING PLANT WCC06D - This plant serves reuse areas PO1, PO2,						3,486,000	914,000	4,400,000
				PO3, and PO6. It is rated at 120 hp; Q = 4200 GPM; TDH = 262 ft.								
		100		Land and Rights								
				Costs of Land and Rights have been included with other features.								
		130		Structures and Improvements					2,100,000			
			1	Excavation, common	4,145	cy	15.00	62,175				
			2	Backfill, common	3,933	cy	10.00	39,330				
			3	Compacted backfill, common	3,933	cy	10.00	39,330				
			4	Gravel surfacing	128	cy	65.00	8,320				
			5	Unwatering/dewatering, 13.8' depth (5 month duration)	1	ls	1,000,000.00	1,000,000				
			6	Concrete	164	cy	1,000.00	164,000				
			7	Furnishing and handling cement	47	ton	170.00	7,990				
			8	Furnishing and placing reinforcement	24,516	lb	1.75	42,903				
			9	Chain link fencing	356	lf	30.00	10,680				
			10	CMU Wall (8' high, 11 lf long)	88	sf	100.00	8,800				
			11	Structural Steel - Sunshades (12' x 27'; 9,283 lbs)	1	ea	20,000.00	20,000				
			12	Mobilization (+/- 5%)				70,176				
			13	Unlisted Items (+/- 15%)				221,056				
			14	Allowance for Procurement Strategies (+/- 5%)				105,240				
				Subtotal				1,800,000				
				Contingencies (+/- 20%)				300,000				
				Field Cost - Structures and Improvements				2,100,000				

CONSTRUCTION COST ESTIMATE

PROJECT: Central Valley Project	PREPARED BY: Regional Office, Sacramento, CA
DIVISION: West San Joaquin Division	ESTIMATE DATE: July 2007 (Rvised after DEC)
UNIT: San Luis Unit -- Drainage System -- Northerly Area	ESTIMATE TYPE: Feasibility
FEATURE: Drainage Feature Re-Evaluation Feasibility Study	PRICE LEVEL: April 2006

PROPERTY CLASS	IDENTIFIED PROPERTY	PLANT ACCOUNT	ITEM	DESCRIPTION	QUANTITY	UNIT	PRICE	AMOUNT	FIELD COST	TOTAL FIELD COST	NONCONTRACT COST	CONSTRUCTION COST
03	06			PUMPING PLANT WCC06D (continued)								
		152		Waterways					190,000			
			1	Steel piping & flanges for manifold	9,056	lb	6.00	54,336				
			2	Motor Op. BFV; Class 150; D=12"; 445 lb/valve	2	ea	22,500.00	45,000				
			3	Tilt Disk Ck. Valve; Class 125; D=12"; 650 lb/valve	2	ea	11,000.00	22,000				
			4	Ball Valve for AV; D=2"; 2 lbs/valve	4	ea	300.00	1,200				
			5	Air Valves; D=2"; 75 lbs/valve	4	ea	600.00	2,400				
			6	Mobilization (+/- 5%)				6,247				
			7	Unlisted Items (+/- 15%)				19,677				
			8	Allowance for Procurement Strategies (+/- 5%)				9,140				
				Subtotal				160,000				
				Contingencies (+/- 20%)				30,000				
				Field Cost - Waterways				190,000				
		153		Waterway Structures					46,000			
			1	Pipe Flowmeter; D = 32"	1	ea	30,000.00	30,000				
			2	Mobilization (+/- 5%)				1,500				
			3	Unlisted Items (+/- 15%)				4,725				
			4	Allowance for Procurement Strategies (+/- 5%)				1,775				
				Subtotal				38,000				
				Contingencies (+/- 20%)				8,000				
				Field Cost - Waterway Structures				46,000				

CONSTRUCTION COST ESTIMATE

PROJECT: Central Valley Project	PREPARED BY: Regional Office, Sacramento, CA
DIVISION: West San Joaquin Division	ESTIMATE DATE: July 2007 (Rvised after DEC)
UNIT: San Luis Unit -- Drainage System -- Northerly Area	ESTIMATE TYPE: Feasibility
FEATURE: Drainage Feature Re-Evaluation Feasibility Study	PRICE LEVEL: April 2006

PROPERTY CLASS	IDENTIFIED PROPERTY	PLANT ACCOUNT	ITEM	DESCRIPTION	QUANTITY	UNIT	PRICE	AMOUNT	FIELD COST	TOTAL FIELD COST	NONCONTRACT COST	CONSTRUCTION COST
03	06			PUMPING PLANT WCC06D (continued)								
		154		Waterway Protective Works					240,000			
			1	Air Chamber; D=15 ft.; cylindrical shaped; 22,800 lbs	1	ea	160,000.00	160,000				
			2	Mobilization (+/- 5%)				8,000				
			3	Unlisted Items (+/- 15%)				25,200				
			4	Allowance for Procurement Strategies (+/- 5%)				6,800				
				Subtotal				200,000				
				Contingencies (+/- 20%)				40,000				
				Field Cost - Waterway Protective Works				240,000				
		160		Pumps and Prime Movers					630,000			
			1	2 Vertical Turbine Units; 3-stg; 1180 rpm; Rated 2100 gpm; TDH=131 ft.	9,200	lb	45.00	414,000				
				W/ 2 vert Induction motors @ 60 hp; 1800 rpm; 3ph / 60 hz / 460 v								
			2	Mobilization (+/- 5%)				20,700				
			3	Unlisted Items (+/- 15%)				65,205				
			4	Allowance for Procurement Strategies (+/- 5%)				20,095				
				Subtotal				520,000				
				Contingencies (+/- 20%)				110,000				
				Field Cost - Pumps and Prime Movers				630,000				
		170		Accessory Electrical Equipment					170,000			
			1	F&I PVC coated rigid steel conduit - 3/4 Inch	100	ft	15.00	1,500				
			2	F&I PVC coated rigid steel conduit - 2 Inch	150	ft	31.00	4,650				
			3	F&I single conductor - 12 AWG	400	ft	2.50	1,000				
			4	F&I single conductor - 4/0 AWG	200	ft	15.00	3,000				
			5	F&I single conductor - 3 AWG	300	ft	6.00	1,800				
			6	F&I single conductor - 6 AWG GND	100	ft	4.50	450				

CONSTRUCTION COST ESTIMATE

PROJECT: Central Valley Project	PREPARED BY: Regional Office, Sacramento, CA
DIVISION: West San Joaquin Division	ESTIMATE DATE: July 2007 (Rvised after DEC)
UNIT: San Luis Unit -- Drainage System -- Northerly Area	ESTIMATE TYPE: Feasibility
FEATURE: Drainage Feature Re-Evaluation Feasibility Study	PRICE LEVEL: April 2006

PROPERTY CLASS	IDENTIFIED PROPERTY	PLANT ACCOUNT	ITEM	DESCRIPTION	QUANTITY	UNIT	PRICE	AMOUNT	FIELD COST	TOTAL FIELD COST	NONCONTRACT COST	CONSTRUCTION COST
03	06			PUMPING PLANT WCC06D (continued)								
		170		Accessory Electrical Equipment (continued)								
			7	F&I grounding system - 4/0 bare copper	200	ft	12.00	2,400				
			8	F&I grounding system - 3/4" dia. 10 foot ground rod	8	ea	175.00	1,400				
			9	F&I Distribution Board w/ enclosure, trips, & A frames	1	ls	2,650.00	2,650				
			10	F&I transformer and load center, w/ enclosure, breakers, and	1	ea	4,000.00	4,000				
				7.5 KVA, single phase, 480V-240/120 V								
			11	F&I Control board for main pump, w/enclosure, relays, switches,	1	ls	90,000.00	90,000				
				fuse block, terminal block, & two 60 hp motor starters								
			12	Mobilization (+/- 5%)				5,643				
			13	Unlisted Items (+/- 15%)				17,774				
			14	Allowance for Procurement Strategies (+/- 5%)				8,734				
				Subtotal				145,000				
				Contingencies (+/- 20%)				25,000				
				Field Cost - Accessory Electrical Equipment				170,000				
		175		Station Equipment					110,000			
			1	Oil filled, distribution power transformer, 1000 kVA; 12.47kV-480V	1	ea	40,000.00	40,000				
			2	7.65-kV MCOV metal oxide distribution class arrester	3	ea	2,000.00	6,000				
			3	3-phase, 15-kV fused disconnect switch, 30E-50E	1	ea	25,000.00	25,000				
			4	Mobilization (+/- 5%)				3,550				
			5	Unlisted Items (+/- 15%)				11,183				

CONSTRUCTION COST ESTIMATE

PROJECT: Central Valley Project	PREPARED BY: Regional Office, Sacramento, CA
DIVISION: West San Joaquin Division	ESTIMATE DATE: July 2007 (Rvised after DEC)
UNIT: San Luis Unit -- Drainage System -- Northerly Area	ESTIMATE TYPE: Feasibility
FEATURE: Drainage Feature Re-Evaluation Feasibility Study	PRICE LEVEL: April 2006

PROPERTY CLASS	IDENTIFIED PROPERTY	PLANT ACCOUNT	ITEM	DESCRIPTION	QUANTITY	UNIT	PRICE	AMOUNT	FIELD COST	TOTAL FIELD COST	NONCONTRACT COST	CONSTRUCTION COST
03	06			PUMPING PLANT WCC06D (continued)								
		175		Station Equipment (continued)								
			6	Allowance for Procurement Strategies (+/- 5%)				4,268				
				Subtotal				90,000				
				Contingencies (+/- 20%)				20,000				
				Field Cost - Station Equipment				110,000				
				FACILITATING SERVICES (2%)								
				INVESTIGATIONS (3%)								
				DESIGNS & SPECIFICATIONS (10%)								
				CONSTRUCTION SUPERVISION (12%)								
				OTHER COSTS (+/- 27%)							914,000	

CONSTRUCTION COST ESTIMATE

PROJECT: Central Valley Project	PREPARED BY: Regional Office, Sacramento, CA
DIVISION: West San Joaquin Division	ESTIMATE DATE: July 2007 (Rvised after DEC)
UNIT: San Luis Unit -- Drainage System -- Northerly Area	ESTIMATE TYPE: Feasibility
FEATURE: Drainage Feature Re-Evaluation Feasibility Study	PRICE LEVEL: April 2006

PROPERTY CLASS	IDENTIFIED PROPERTY	PLANT ACCOUNT	ITEM	DESCRIPTION	QUANTITY	UNIT	PRICE	AMOUNT	FIELD COST	TOTAL FIELD COST	NONCONTRACT COST	CONSTRUCTION COST
03	07			PUMPING PLANT WCC03B - Plant serves reuse areas FC5-2, FC5-3,						4,643,000	1,257,000	5,900,000
				PE10, and PE11. It is rated at 295 hp; Q = 12075 GPM; TDH = 205 ft.								
		100		Land and Rights								
				Costs of Land and Rights have been included with other features.								
		130		Structures and Improvements					2,600,000			
			1	Excavation, common	6,746	cy	15.00	101,190				
			2	Backfill, common	6,259	cy	10.00	62,590				
			3	Compacted backfill, common	6,259	cy	10.00	62,590				
			4	Gravel surfacing	126	cy	65.00	8,190				
			5	Unwatering/dewatering, 17.3' depth (5 month duration)	1	ls	1,000,000.00	1,000,000				
			6	Concrete	336	cy	1,000.00	336,000				
			7	Furnishing and handling cement	95	ton	170.00	16,150				
			8	Furnishing and placing reinforcement	50,216	lb	1.75	87,878				
			9	Chain link fencing	359	lf	30.00	10,770				
			10	CMU Wall (8' high, 20 lf long)	160	sf	100.00	16,000				
			11	Structural Steel - Sunshades (21' x 31'; 16,000 lbs)	1	ea	40,000.00	40,000				
			12	Mobilization (+/- 5%)				87,068				
			13	Unlisted Items (+/- 15%)				274,264				
			14	Allowance for Procurement Strategies (+/- 5%)				97,310				
				Subtotal				2,200,000				
				Contingencies (+/- 20%)				400,000				
				Field Cost - Structures and Improvements				2,600,000				

CONSTRUCTION COST ESTIMATE

PROJECT: Central Valley Project	PREPARED BY: Regional Office, Sacramento, CA
DIVISION: West San Joaquin Division	ESTIMATE DATE: July 2007 (Rvised after DEC)
UNIT: San Luis Unit -- Drainage System -- Northerly Area	ESTIMATE TYPE: Feasibility
FEATURE: Drainage Feature Re-Evaluation Feasibility Study	PRICE LEVEL: April 2006

PROPERTY CLASS	IDENTIFIED PROPERTY	PLANT ACCOUNT	ITEM	DESCRIPTION	QUANTITY	UNIT	PRICE	AMOUNT	FIELD COST	TOTAL FIELD COST	NONCONTRACT COST	CONSTRUCTION COST
03	07			PUMPING PLANT WCC03B (continued)								
		152		Waterways					270,000			
			1	Steel piping & flanges for manifold	9,191	lb	6.00	55,146				
			2	Motor Op. BFV; Class 150; D=12"; 445 lb/valve	1	ea	22,500.00	22,500				
			3	Motor Op. BFV; Class 150; D=16"; 715 lb/valve	1	ea	26,250.00	26,250				
			4	Motor Op. BFV; Class 150; D=18"; 875 lb/valve	1	ea	27,500.00	27,500				
			5	Tilt Disk Ck. Valve; Class 125; D=12"; 650 lb/valve	1	ea	11,000.00	11,000				
			6	Tilt Disk Ck. Valve; Class 125; D=16"; 1050 lb/valve	1	ea	14,000.00	14,000				
			7	Tilt Disk Ck. Valve; Class 125; D=18"; 1535 lb/valve	1	ea	15,000.00	15,000				
			8	Air Valves; D=2"; 75 lbs/valve	4	ea	600.00	2,400				
			9	Air Valves; D=3"; 100 lbs/valve	2	ea	1,000.00	2,000				
			10	Ball Valve for AV; D=2"; 2 lbs/valve	4	ea	300.00	1,200				
			11	Ball Valve for AV; D=3"; 5 lbs/valve	2	ea	550.00	1,100				
			12	Mobilization (+/- 5%)				8,850				
			13	Unlisted Items (+/- 15%)				28,042				
			14	Allowance for Procurement Strategies (+/- 5%)				15,012				
				Subtotal				230,000				
				Contingencies (+/- 20%)				40,000				
				Field Cost - Waterways				270,000				
		153		Waterway Structures					53,000			
			1	Pipe Flowmeter; D = 36"	1	ea	35,000.00	35,000				
			2	Mobilization (+/- 5%)				1,750				
			3	Unlisted Items (+/- 15%)				5,513				
			4	Allowance for Procurement Strategies (+/- 5%)				1,738				
				Subtotal				44,000				
				Contingencies (+/- 20%)				9,000				
				Field Cost - Waterway Structures				53,000				

CONSTRUCTION COST ESTIMATE

PROJECT: Central Valley Project	PREPARED BY: Regional Office, Sacramento, CA
DIVISION: West San Joaquin Division	ESTIMATE DATE: July 2007 (Rvised after DEC)
UNIT: San Luis Unit -- Drainage System -- Northerly Area	ESTIMATE TYPE: Feasibility
FEATURE: Drainage Feature Re-Evaluation Feasibility Study	PRICE LEVEL: April 2006

PROPERTY CLASS	IDENTIFIED PROPERTY	PLANT ACCOUNT	ITEM	DESCRIPTION	QUANTITY	UNIT	PRICE	AMOUNT	FIELD COST	TOTAL FIELD COST	NONCONTRACT COST	CONSTRUCTION COST
03	07			PUMPING PLANT WCC03B (continued)								
		154		Waterway Protective Works					240,000			
			1	Air Chamber; D=15 ft.; cylindrical shaped; 22,800 lbs	1	ea	160,000.00	160,000				
			2	Mobilization (+/- 5%)				8,000				
			3	Unlisted Items (+/- 15%)				25,200				
			4	Allowance for Procurement Strategies (+/- 5%)				6,800				
				Subtotal				200,000				
				Contingencies (+/- 20%)				40,000				
				Field Cost - Waterway Protective Works				240,000				
		160		Pumps and Prime Movers					1,100,000			
			1	Vertical Turbine Unit; 1-stg; 1770 rpm; Rated 6175 gpm; TDH=86 ft.	8,100	lb	35.00	283,500				
				W/ vert Induction motor @ 200 hp; 1800 rpm; 3ph / 60 hz / 460 v								
			2	Vertical Turbine Unit; 2-stg; 880 rpm; Rated 3700 gpm; TDH=64 ft.	7,400	lb	35.00	259,000				
				W/ vert Induction motor @ 75 hp; 900 rpm; 3ph / 60 hz / 460 v								
			3	Vertical Turbine Unit; 2-stg; 880 rpm; Rated 2200 gpm; TDH=55 ft.	4,200	lb	50.00	210,000				
				W/ vert Induction motor @ 20 hp; 900 rpm; 3ph / 60 hz / 460 v								
			4	Mobilization (+/- 5%)				14,175				
			5	Unlisted Items (+/- 15%)				115,001				
			6	Allowance for Procurement Strategies (+/- 5%)				48,324				
				Subtotal				930,000				
				Contingencies (+/- 20%)				170,000				
				Field Cost - Pumps and Prime Movers				1,100,000				

CONSTRUCTION COST ESTIMATE

PROJECT: Central Valley Project	PREPARED BY: Regional Office, Sacramento, CA
DIVISION: West San Joaquin Division	ESTIMATE DATE: July 2007 (Rvised after DEC)
UNIT: San Luis Unit -- Drainage System -- Northerly Area	ESTIMATE TYPE: Feasibility
FEATURE: Drainage Feature Re-Evaluation Feasibility Study	PRICE LEVEL: April 2006

PROPERTY CLASS	IDENTIFIED PROPERTY	PLANT ACCOUNT	ITEM	DESCRIPTION	QUANTITY	UNIT	PRICE	AMOUNT	FIELD COST	TOTAL FIELD COST	NONCONTRACT COST	CONSTRUCTION COST
03	07			PUMPING PLANT WCC03B (continued)								
		170		Accessory Electrical Equipment					270,000			
			1	F&I PVC coated rigid steel conduit - 3/4 Inch	150	ft	15.00	2,250				
			2	F&I PVC coated rigid steel conduit - 1-1/2 Inch	150	ft	25.00	3,750				
			3	F&I PVC coated rigid steel conduit - 2-1/2 Inch	100	ft	45.00	4,500				
			4	F&I single conductor - 12 AWG	400	ft	2.50	1,000				
			5	F&I single conductor - 250 MCM	400	ft	10.00	4,000				
			6	F&I single conductor - 350 MCM	150	ft	12.00	1,800				
			7	F&I single conductor - 1 AWG	200	ft	5.50	1,100				
			8	F&I single conductor - 4 AWG	50	ft	4.00	200				
			9	F&I single conductor - 8 AWG	200	ft	3.50	700				
			10	F&I grounding system - 4/0 bare copper	200	ft	12.00	2,400				
			11	F&I grounding system - 3/4" dia. 10 foot ground rod	8	ea	175.00	1,400				
			12	F&I Distribution Board w/ enclosure, trips, & A frames	1	ls	2,650.00	2,650				
			13	F&I transformer and load center, w/ enclosure, breakers, and	1	ea	4,000.00	4,000				
				7.5 KVA, single phase, 480V-240/120 V								
			14	F&I Control board for main pump, w/enclosure, relays, switches,	1	ls	150,000.00	150,000				
				fuse block, terminal block, and 200, 75, & 20 hp motor starters								
			15	Mobilization (+/- 5%)				8,988				
			16	Unlisted Items (+/- 15%)				28,311				
			17	Allowance for Procurement Strategies (+/- 5%)				12,952				
				Subtotal				230,000				
				Contingencies (+/- 20%)				40,000				
				Field Cost - Accessory Electrical Equipment				270,000				
		175		Station Equipment					110,000			
			1	Oil filled, distribution power transformer, 1000 kVA; 12.47kV-480V	1	ea	40,000.00	40,000				
			2	7.65-kV MCOV metal oxide distribution class arrester	3	ea	2,000.00	6,000				
			3	3-phase, 15-kV fused disconnect switch, 10E-15E	1	ea	25,000.00	25,000				
			4	Mobilization (+/- 5%)				3,550				
			5	Unlisted Items (+/- 15%)				11,183				

CONSTRUCTION COST ESTIMATE

PROJECT: Central Valley Project	PREPARED BY: Regional Office, Sacramento, CA
DIVISION: West San Joaquin Division	ESTIMATE DATE: July 2007 (Rvised after DEC)
UNIT: San Luis Unit -- Drainage System -- Northerly Area	ESTIMATE TYPE: Feasibility
FEATURE: Drainage Feature Re-Evaluation Feasibility Study	PRICE LEVEL: April 2006

PROPERTY CLASS	IDENTIFIED PROPERTY	PLANT ACCOUNT	ITEM	DESCRIPTION	QUANTITY	UNIT	PRICE	AMOUNT	FIELD COST	TOTAL FIELD COST	NONCONTRACT COST	CONSTRUCTION COST
03	07			PUMPING PLANT WCC03B (continued)								
		175		Station Equipment (continued)								
			6	Allowance for Procurement Strategies (+/- 5%)				4,268				
				Subtotal				90,000				
				Contingencies (+/- 20%)				20,000				
				Field Cost - Station Equipment				110,000				
				FACILITATING SERVICES (2%)								
				INVESTIGATIONS (3%)								
				DESIGNS & SPECIFICATIONS (10%)								
				CONSTRUCTION SUPERVISION (12%)								
				OTHER COSTS (+/- 27%)							1,257,000	

CONSTRUCTION COST ESTIMATE

PROJECT: Central Valley Project	PREPARED BY: Regional Office, Sacramento, CA
DIVISION: West San Joaquin Division	ESTIMATE DATE: July 2007 (Rvised after DEC)
UNIT: San Luis Unit -- Drainage System -- Northerly Area	ESTIMATE TYPE: Feasibility
FEATURE: Drainage Feature Re-Evaluation Feasibility Study	PRICE LEVEL: April 2006

PROPERTY CLASS	IDENTIFIED PROPERTY	PLANT ACCOUNT	ITEM	DESCRIPTION	QUANTITY	UNIT	PRICE	AMOUNT	FIELD COST	TOTAL FIELD COST	NONCONTRACT COST	CONSTRUCTION COST
03	08			PUMPING PLANT WCC11D - Plant serves reuse areas FC5-2, FC5-3,						4,643,000	1,257,000	5,900,000
				PE10, and PE11. It is rated at 295 hp; Q = 12075 GPM; TDH = 205 ft.								
		100		Land and Rights								
				Costs of Land and Rights have been included with other features.								
		130		Structures and Improvements					2,600,000			
			1	Excavation, common	6,726	cy	15.00	100,890				
			2	Backfill, common	6,241	cy	10.00	62,410				
			3	Compacted backfill, common	6,241	cy	10.00	62,410				
			4	Gravel surfacing	123	cy	65.00	7,995				
			5	Unwatering/dewatering, 17.3' depth (5 month duration)	1	ls	1,000,000.00	1,000,000				
			6	Concrete	333	cy	1,000.00	333,000				
			7	Furnishing and handling cement	94	ton	170.00	15,980				
			8	Furnishing and placing reinforcement	49,916	lb	1.75	87,353				
			9	Chain link fencing	355	lf	30.00	10,650				
			10	CMU Wall (8' high, 20 lf long)	160	sf	100.00	16,000				
			11	Structural Steel - Sunshades (21' x 31'; 16,000 lbs)	1	ea	40,000.00	40,000				
			12	Mobilization (+/- 5%)				86,834				
			13	Unlisted Items (+/- 15%)				273,528				
			14	Allowance for Procurement Strategies (+/- 5%)				102,949				
				Subtotal				2,200,000				
				Contingencies (+/- 20%)				400,000				
				Field Cost - Structures and Improvements				2,600,000				

CONSTRUCTION COST ESTIMATE

PROJECT: Central Valley Project	PREPARED BY: Regional Office, Sacramento, CA
DIVISION: West San Joaquin Division	ESTIMATE DATE: July 2007 (Rvised after DEC)
UNIT: San Luis Unit -- Drainage System -- Northerly Area	ESTIMATE TYPE: Feasibility
FEATURE: Drainage Feature Re-Evaluation Feasibility Study	PRICE LEVEL: April 2006

PROPERTY CLASS	IDENTIFIED PROPERTY	PLANT ACCOUNT	ITEM	DESCRIPTION	QUANTITY	UNIT	PRICE	AMOUNT	FIELD COST	TOTAL FIELD COST	NONCONTRACT COST	CONSTRUCTION COST
03	08			PUMPING PLANT WCC11D (continued)								
		152		Waterways					270,000			
			1	Steel piping & flanges for manifold	8,746	lb	6.00	52,476				
			2	Motor Op. BFV; Class 150; D=12"; 445 lb/valve	1	ea	22,500.00	22,500				
			3	Motor Op. BFV; Class 150; D=16"; 715 lb/valve	1	ea	26,250.00	26,250				
			4	Motor Op. BFV; Class 150; D=18"; 875 lb/valve	1	ea	27,500.00	27,500				
			5	Tilt Disk Ck. Valve; Class 125; D=12"; 650 lb/valve	1	ea	11,000.00	11,000				
			6	Tilt Disk Ck. Valve; Class 125; D=16"; 1050 lb/valve	1	ea	14,000.00	14,000				
			7	Tilt Disk Ck. Valve; Class 125; D=18"; 1535 lb/valve	1	ea	15,000.00	15,000				
			8	Air Valves; D=2"; 75 lbs/valve	4	ea	600.00	2,400				
			9	Air Valves; D=3"; 100 lbs/valve	2	ea	1,000.00	2,000				
			10	Ball Valve for AV; D=2"; 2 lbs/valve	4	ea	300.00	1,200				
			11	Ball Valve for AV; D=3"; 5 lbs/valve	2	ea	550.00	1,100				
			12	Mobilization (+/- 5%)				8,716				
			13	Unlisted Items (+/- 15%)				27,621				
			14	Allowance for Procurement Strategies (+/- 5%)				8,236				
				Subtotal				220,000				
				Contingencies (+/- 20%)				50,000				
				Field Cost - Waterways				270,000				
		153		Waterway Structures					53,000			
			1	Pipe Flowmeter; D = 36"	1	ea	35,000.00	35,000				
			2	Mobilization (+/- 5%)				1,750				
			3	Unlisted Items (+/- 15%)				5,513				
			4	Allowance for Procurement Strategies (+/- 5%)				1,738				
				Subtotal				44,000				
				Contingencies (+/- 20%)				9,000				
				Field Cost - Waterway Structures				53,000				

CONSTRUCTION COST ESTIMATE

PROJECT: Central Valley Project	PREPARED BY: Regional Office, Sacramento, CA
DIVISION: West San Joaquin Division	ESTIMATE DATE: July 2007 (Rvised after DEC)
UNIT: San Luis Unit -- Drainage System -- Northerly Area	ESTIMATE TYPE: Feasibility
FEATURE: Drainage Feature Re-Evaluation Feasibility Study	PRICE LEVEL: April 2006

PROPERTY CLASS	IDENTIFIED PROPERTY	PLANT ACCOUNT	ITEM	DESCRIPTION	QUANTITY	UNIT	PRICE	AMOUNT	FIELD COST	TOTAL FIELD COST	NONCONTRACT COST	CONSTRUCTION COST
03	08			PUMPING PLANT WCC11D (continued)								
		154		Waterway Protective Works					240,000			
			1	Air Chamber; D=15 ft.; cylindrical shaped; 22,800 lbs	1	ea	160,000.00	160,000				
			2	Mobilization (+/- 5%)				8,000				
			3	Unlisted Items (+/- 15%)				25,200				
			4	Allowance for Procurement Strategies (+/- 5%)				6,800				
				Subtotal				200,000				
				Contingencies (+/- 20%)				40,000				
				Field Cost - Waterway Protective Works				240,000				
		160		Pumps and Prime Movers					1,100,000			
			1	Vertical Turbine Unit; 1-stg; 1770 rpm; Rated 6175 gpm; TDH=86 ft.	8,100	lb	35.00	283,500				
				W/ vert Induction motor @ 200 hp; 1800 rpm; 3ph / 60 hz / 460 v								
			2	Vertical Turbine Unit; 2-stg; 880 rpm; Rated 3700 gpm; TDH=64 ft.	7,400	lb	35.00	259,000				
				W/ vert Induction motor @ 75 hp; 900 rpm; 3ph / 60 hz / 460 v								
			3	Vertical Turbine Unit; 2-stg; 880 rpm; Rated 2200 gpm; TDH=55 ft.	4,200	lb	50.00	210,000				
				W/ vert Induction motor @ 20 hp; 900 rpm; 3ph / 60 hz / 460 v								
			4	Mobilization (+/- 5%)				14,175				
			5	Unlisted Items (+/- 15%)				115,001				
			6	Allowance for Procurement Strategies (+/- 5%)				48,324				
				Subtotal				930,000				
				Contingencies (+/- 20%)				170,000				
				Field Cost - Pumps and Prime Movers				1,100,000				

CONSTRUCTION COST ESTIMATE

PROJECT: Central Valley Project	PREPARED BY: Regional Office, Sacramento, CA
DIVISION: West San Joaquin Division	ESTIMATE DATE: July 2007 (Rvised after DEC)
UNIT: San Luis Unit -- Drainage System -- Northerly Area	ESTIMATE TYPE: Feasibility
FEATURE: Drainage Feature Re-Evaluation Feasibility Study	PRICE LEVEL: April 2006

PROPERTY CLASS	IDENTIFIED PROPERTY	PLANT ACCOUNT	ITEM	DESCRIPTION	QUANTITY	UNIT	PRICE	AMOUNT	FIELD COST	TOTAL FIELD COST	NONCONTRACT COST	CONSTRUCTION COST
03	08			PUMPING PLANT WCC11D (continued)								
		170		Accessory Electrical Equipment					270,000			
			1	F&I PVC coated rigid steel conduit - 3/4 Inch	150	ft	15.00	2,250				
			2	F&I PVC coated rigid steel conduit - 1-1/2 Inch	150	ft	25.00	3,750				
			3	F&I PVC coated rigid steel conduit - 2-1/2 Inch	100	ft	45.00	4,500				
			4	F&I single conductor - 12 AWG	400	ft	2.50	1,000				
			5	F&I single conductor - 250 MCM	400	ft	10.00	4,000				
			6	F&I single conductor - 350 MCM	150	ft	12.00	1,800				
			7	F&I single conductor - 1 AWG	200	ft	5.50	1,100				
			8	F&I single conductor - 4 AWG	50	ft	4.00	200				
			9	F&I single conductor - 8 AWG	200	ft	3.50	700				
			10	F&I grounding system - 4/0 bare copper	200	ft	12.00	2,400				
			11	F&I grounding system - 3/4" dia. 10 foot ground rod	8	ea	175.00	1,400				
			12	F&I Distribution Board w/ enclosure, trips, & A frames	1	ls	2,650.00	2,650				
			13	F&I transformer and load center, w/ enclosure, breakers, and	1	ea	4,000.00	4,000				
				7.5 KVA, single phase, 480V-240/120 V								
			14	F&I Control board for main pump, w/enclosure, relays, switches,	1	ls	150,000.00	150,000				
				fuse block, terminal block, and 200, 75, & 20 hp motor starters								
			15	Mobilization (+/- 5%)				8,988				
			16	Unlisted Items (+/- 15%)				28,311				
			17	Allowance for Procurement Strategies (+/- 5%)				12,952				
				Subtotal				230,000				
				Contingencies (+/- 20%)				40,000				
				Field Cost - Accessory Electrical Equipment				270,000				
		175		Station Equipment					110,000			
			1	Oil filled, distribution power transformer, 1000 kVA; 12.47kV-480V	1	ea	40,000.00	40,000				
			2	7.65-kV MCOV metal oxide distribution class arrester	3	ea	2,000.00	6,000				
			3	3-phase, 15-kV fused disconnect switch, 10E-15E	1	ea	25,000.00	25,000				
			4	Mobilization (+/- 5%)				3,550				
			5	Unlisted Items (+/- 15%)				11,183				

CONSTRUCTION COST ESTIMATE

PROJECT: Central Valley Project	PREPARED BY: Regional Office, Sacramento, CA
DIVISION: West San Joaquin Division	ESTIMATE DATE: July 2007 (Rvised after DEC)
UNIT: San Luis Unit -- Drainage System -- Northerly Area	ESTIMATE TYPE: Feasibility
FEATURE: Drainage Feature Re-Evaluation Feasibility Study	PRICE LEVEL: April 2006

PROPERTY CLASS	IDENTIFIED PROPERTY	PLANT ACCOUNT	ITEM	DESCRIPTION	QUANTITY	UNIT	PRICE	AMOUNT	FIELD COST	TOTAL FIELD COST	NONCONTRACT COST	CONSTRUCTION COST
03	08			PUMPING PLANT WCC11D (continued)								
		175		Station Equipment (continued)								
			6	Allowance for Procurement Strategies (+/- 5%)				4,268				
				Subtotal				90,000				
				Contingencies (+/- 20%)				20,000				
				Field Cost - Station Equipment				110,000				
				FACILITATING SERVICES (2%)								
				INVESTIGATIONS (3%)								
				DESIGNS & SPECIFICATIONS (10%)								
				CONSTRUCTION SUPERVISION (12%)								
				OTHER COSTS (+/- 27%)							1,257,000	

CONSTRUCTION COST ESTIMATE

PROJECT: Central Valley Project	PREPARED BY: Regional Office, Sacramento, CA
DIVISION: West San Joaquin Division	ESTIMATE DATE: July 2007 (Rvised after DEC)
UNIT: San Luis Unit -- Drainage System -- Northerly Area	ESTIMATE TYPE: Feasibility
FEATURE: Drainage Feature Re-Evaluation Feasibility Study	PRICE LEVEL: April 2006

PROPERTY CLASS	IDENTIFIED PROPERTY	PLANT ACCOUNT	ITEM	DESCRIPTION	QUANTITY	UNIT	PRICE	AMOUNT	FIELD COST	TOTAL FIELD COST	NONCONTRACT COST	CONSTRUCTION COST
03	09			PUMPING PLANT WCC02A - This plant serves reuse areas PO1, PO2,						4,643,000	1,257,000	5,900,000
				PO3, and PO6. It is rated at 295 hp; Q = 12075 GPM; TDH = 205 ft.								
		100		Land and Rights								
				Costs of Land and Rights have been included with other features.								
		130		Structures and Improvements					2,600,000			
			1	Excavation, common	6,726	cy	15.00	100,890				
			2	Backfill, common	6,241	cy	10.00	62,410				
			3	Compacted backfill, common	6,241	cy	10.00	62,410				
			4	Gravel surfacing	123	cy	65.00	7,995				
			5	Unwatering/dewatering, 17.3' depth (5 month duration)	1	ls	1,000,000.00	1,000,000				
			6	Concrete	333	cy	1,000.00	333,000				
			7	Furnishing and handling cement	94	ton	170.00	15,980				
			8	Furnishing and placing reinforcement	49,916	lb	1.75	87,353				
			9	Chain link fencing	355	lf	30.00	10,650				
			10	CMU Wall (8' high, 20 lf long)	160	sf	100.00	16,000				
			11	Structural Steel - Sunshades (21' x 31'; 16,000 lbs)	1	ea	40,000.00	40,000				
			12	Mobilization (+/- 5%)				86,834				
			13	Unlisted Items (+/- 15%)				273,528				
			14	Allowance for Procurement Strategies (+/- 5%)				102,949				
				Subtotal				2,200,000				
				Contingencies (+/- 20%)				400,000				
				Field Cost - Structures and Improvements				2,600,000				

CONSTRUCTION COST ESTIMATE

PROJECT: Central Valley Project	PREPARED BY: Regional Office, Sacramento, CA
DIVISION: West San Joaquin Division	ESTIMATE DATE: July 2007 (Rvised after DEC)
UNIT: San Luis Unit -- Drainage System -- Northerly Area	ESTIMATE TYPE: Feasibility
FEATURE: Drainage Feature Re-Evaluation Feasibility Study	PRICE LEVEL: April 2006

PROPERTY CLASS	IDENTIFIED PROPERTY	PLANT ACCOUNT	ITEM	DESCRIPTION	QUANTITY	UNIT	PRICE	AMOUNT	FIELD COST	TOTAL FIELD COST	NONCONTRACT COST	CONSTRUCTION COST
03	09			PUMPING PLANT WCC02A (continued)								
		152		Waterways					270,000			
			1	Steel piping & flanges for manifold	8,746	lb	6.00	52,476				
			2	Motor Op. BFV; Class 150; D=12"; 445 lb/valve	1	ea	22,500.00	22,500				
			3	Motor Op. BFV; Class 150; D=16"; 715 lb/valve	1	ea	26,250.00	26,250				
			4	Motor Op. BFV; Class 150; D=18"; 875 lb/valve	1	ea	27,500.00	27,500				
			5	Tilt Disk Ck. Valve; Class 125; D=12"; 650 lb/valve	1	ea	11,000.00	11,000				
			6	Tilt Disk Ck. Valve; Class 125; D=16"; 1050 lb/valve	1	ea	14,000.00	14,000				
			7	Tilt Disk Ck. Valve; Class 125; D=18"; 1535 lb/valve	1	ea	15,000.00	15,000				
			8	Air Valves; D=2"; 75 lbs/valve	4	ea	600.00	2,400				
			9	Air Valves; D=3"; 100 lbs/valve	2	ea	1,000.00	2,000				
			10	Ball Valve for AV; D=2"; 2 lbs/valve	4	ea	300.00	1,200				
			11	Ball Valve for AV; D=3"; 5 lbs/valve	2	ea	550.00	1,100				
			12	Mobilization (+/- 5%)				8,716				
			13	Unlisted Items (+/- 15%)				27,621				
			14	Allowance for Procurement Strategies (+/- 5%)				8,236				
				Subtotal				220,000				
				Contingencies (+/- 20%)				50,000				
				Field Cost - Waterways				270,000				
		153		Waterway Structures					53,000			
			1	Pipe Flowmeter; D = 36"	1	ea	35,000.00	35,000				
			2	Mobilization (+/- 5%)				1,750				
			3	Unlisted Items (+/- 15%)				5,513				
			4	Allowance for Procurement Strategies (+/- 5%)				1,738				
				Subtotal				44,000				
				Contingencies (+/- 20%)				9,000				
				Field Cost - Waterway Structures				53,000				

CONSTRUCTION COST ESTIMATE

PROJECT: Central Valley Project	PREPARED BY: Regional Office, Sacramento, CA
DIVISION: West San Joaquin Division	ESTIMATE DATE: July 2007 (Rvised after DEC)
UNIT: San Luis Unit -- Drainage System -- Northerly Area	ESTIMATE TYPE: Feasibility
FEATURE: Drainage Feature Re-Evaluation Feasibility Study	PRICE LEVEL: April 2006

PROPERTY CLASS	IDENTIFIED PROPERTY	PLANT ACCOUNT	ITEM	DESCRIPTION	QUANTITY	UNIT	PRICE	AMOUNT	FIELD COST	TOTAL FIELD COST	NONCONTRACT COST	CONSTRUCTION COST
03	09			PUMPING PLANT WCC02A (continued)								
		154		Waterway Protective Works					240,000			
			1	Air Chamber; D=15 ft.; cylindrical shaped; 22,800 lbs	1	ea	160,000.00	160,000				
			2	Mobilization (+/- 5%)				8,000				
			3	Unlisted Items (+/- 15%)				25,200				
			4	Allowance for Procurement Strategies (+/- 5%)				6,800				
				Subtotal				200,000				
				Contingencies (+/- 20%)				40,000				
				Field Cost - Waterway Protective Works				240,000				
		160		Pumps and Prime Movers					1,100,000			
			1	Vertical Turbine Unit; 1-stg; 1770 rpm; Rated 6175 gpm; TDH=86 ft.	8,100	lb	35.00	283,500				
				W/ vert Induction motor @ 200 hp; 1800 rpm; 3ph / 60 hz / 460 v								
			2	Vertical Turbine Unit; 2-stg; 880 rpm; Rated 3700 gpm; TDH=64 ft.	7,400	lb	35.00	259,000				
				W/ vert Induction motor @ 75 hp; 900 rpm; 3ph / 60 hz / 460 v								
			3	Vertical Turbine Unit; 2-stg; 880 rpm; Rated 2200 gpm; TDH=55 ft.	4,200	lb	50.00	210,000				
				W/ vert Induction motor @ 20 hp; 900 rpm; 3ph / 60 hz / 460 v								
			4	Mobilization (+/- 5%)				14,175				
			5	Unlisted Items (+/- 15%)				115,001				
			6	Allowance for Procurement Strategies (+/- 5%)				48,324				
				Subtotal				930,000				
				Contingencies (+/- 20%)				170,000				
				Field Cost - Pumps and Prime Movers				1,100,000				

CONSTRUCTION COST ESTIMATE

PROJECT: Central Valley Project	PREPARED BY: Regional Office, Sacramento, CA
DIVISION: West San Joaquin Division	ESTIMATE DATE: July 2007 (Rvised after DEC)
UNIT: San Luis Unit -- Drainage System -- Northerly Area	ESTIMATE TYPE: Feasibility
FEATURE: Drainage Feature Re-Evaluation Feasibility Study	PRICE LEVEL: April 2006

PROPERTY CLASS	IDENTIFIED PROPERTY	PLANT ACCOUNT	ITEM	DESCRIPTION	QUANTITY	UNIT	PRICE	AMOUNT	FIELD COST	TOTAL FIELD COST	NONCONTRACT COST	CONSTRUCTION COST
03	09			PUMPING PLANT WCC02A (continued)								
		170		Accessory Electrical Equipment					270,000			
			1	F&I PVC coated rigid steel conduit - 3/4 Inch	150	ft	15.00	2,250				
			2	F&I PVC coated rigid steel conduit - 1-1/2 Inch	150	ft	25.00	3,750				
			3	F&I PVC coated rigid steel conduit - 2-1/2 Inch	100	ft	45.00	4,500				
			4	F&I single conductor - 12 AWG	400	ft	2.50	1,000				
			5	F&I single conductor - 250 MCM	400	ft	10.00	4,000				
			6	F&I single conductor - 350 MCM	150	ft	12.00	1,800				
			7	F&I single conductor - 1 AWG	200	ft	5.50	1,100				
			8	F&I single conductor - 4 AWG	50	ft	4.00	200				
			9	F&I single conductor - 8 AWG	200	ft	3.50	700				
			10	F&I grounding system - 4/0 bare copper	200	ft	12.00	2,400				
			11	F&I grounding system - 3/4" dia. 10 foot ground rod	8	ea	175.00	1,400				
			12	F&I Distribution Board w/ enclosure, trips, & A frames	1	ls	2,650.00	2,650				
			13	F&I transformer and load center, w/ enclosure, breakers, and	1	ea	4,000.00	4,000				
				7.5 KVA, single phase, 480V-240/120 V								
			14	F&I Control board for main pump, w/enclosure, relays, switches,	1	ls	150,000.00	150,000				
				fuse block, terminal block, and 200, 75, & 20 hp motor starters								
			15	Mobilization (+/- 5%)				8,988				
			16	Unlisted Items (+/- 15%)				28,311				
			17	Allowance for Procurement Strategies (+/- 5%)				12,952				
				Subtotal				230,000				
				Contingencies (+/- 20%)				40,000				
				Field Cost - Accessory Electrical Equipment				270,000				
		175		Station Equipment					110,000			
			1	Oil filled, distribution power transformer, 1000 kVA; 12.47kV-480V	1	ea	40,000.00	40,000				
			2	7.65-kV MCOV metal oxide distribution class arrester	3	ea	2,000.00	6,000				
			3	3-phase, 15-kV fused disconnect switch, 30E-50E	1	ea	25,000.00	25,000				
			4	Mobilization (+/- 5%)				3,550				
			5	Unlisted Items (+/- 15%)				11,183				

CONSTRUCTION COST ESTIMATE

PROJECT: Central Valley Project	PREPARED BY: Regional Office, Sacramento, CA
DIVISION: West San Joaquin Division	ESTIMATE DATE: July 2007 (Rvised after DEC)
UNIT: San Luis Unit -- Drainage System -- Northerly Area	ESTIMATE TYPE: Feasibility
FEATURE: Drainage Feature Re-Evaluation Feasibility Study	PRICE LEVEL: April 2006

PROPERTY CLASS	IDENTIFIED PROPERTY	PLANT ACCOUNT	ITEM	DESCRIPTION	QUANTITY	UNIT	PRICE	AMOUNT	FIELD COST	TOTAL FIELD COST	NONCONTRACT COST	CONSTRUCTION COST
03	09			PUMPING PLANT WCC02A (continued)								
		175		Station Equipment (continued)								
			6	Allowance for Procurement Strategies (+/- 5%)				4,268				
				Subtotal				90,000				
				Contingencies (+/- 20%)				20,000				
				Field Cost - Station Equipment				110,000				
				FACILITATING SERVICES (2%)								
				INVESTIGATIONS (3%)								
				DESIGNS & SPECIFICATIONS (10%)								
				CONSTRUCTION SUPERVISION (12%)								
				OTHER COSTS (+/- 27%)							1,257,000	

CONSTRUCTION COST ESTIMATE

PROJECT: Central Valley Project	PREPARED BY: Regional Office, Sacramento, CA
DIVISION: West San Joaquin Division	ESTIMATE DATE: July 2007 (Rvised after DEC)
UNIT: San Luis Unit -- Drainage System -- Northerly Area	ESTIMATE TYPE: Feasibility
FEATURE: Drainage Feature Re-Evaluation Feasibility Study	PRICE LEVEL: April 2006

PROPERTY CLASS	IDENTIFIED PROPERTY	PLANT ACCOUNT	ITEM	DESCRIPTION	QUANTITY	UNIT	PRICE	AMOUNT	FIELD COST	TOTAL FIELD COST	NONCONTRACT COST	CONSTRUCTION COST
03	10			PUMPING PLANT WCC01C - This plant serves reuse areas PO1, PO2,						4,760,000	1,240,000	6,000,000
				PO3, and PO6. It is rated at 295 hp; Q = 12075 GPM; TDH = 205 ft.								
		100		Land and Rights								
				Costs of Land and Rights have been included with other features.								
		130		Structures and Improvements					2,700,000			
			1	Excavation, common	6,832	cy	15.00	102,480				
			2	Backfill, common	6,334	cy	10.00	63,340				
			3	Compacted backfill, common	6,334	cy	10.00	63,340				
			4	Gravel surfacing	138	cy	65.00	8,970				
			5	Unwatering/dewatering, 17.3' depth (5 month duration)	1	ls	1,000,000.00	1,000,000				
			6	Concrete	345	cy	1,000.00	345,000				
			7	Furnishing and handling cement	98	ton	170.00	16,660				
			8	Furnishing and placing reinforcement	51,616	lb	1.75	90,328				
			9	Chain link fencing	376	lf	30.00	11,280				
			10	CMU Wall (8' high, 20 lf long)	160	sf	100.00	16,000				
			11	Structural Steel - Sunshades (21' x 31'; 16,000 lbs)	1	ea	40,000.00	40,000				
			12	Mobilization (+/- 5%)				87,870				
			13	Unlisted Items (+/- 15%)				276,790				
			14	Allowance for Procurement Strategies (+/- 5%)				77,942				
				Subtotal				2,200,000				
				Contingencies (+/- 20%)				500,000				
				Field Cost - Structures and Improvements				2,700,000				

CONSTRUCTION COST ESTIMATE

PROJECT: Central Valley Project	PREPARED BY: Regional Office, Sacramento, CA
DIVISION: West San Joaquin Division	ESTIMATE DATE: July 2007 (Rvised after DEC)
UNIT: San Luis Unit -- Drainage System -- Northerly Area	ESTIMATE TYPE: Feasibility
FEATURE: Drainage Feature Re-Evaluation Feasibility Study	PRICE LEVEL: April 2006

PROPERTY CLASS	IDENTIFIED PROPERTY	PLANT ACCOUNT	ITEM	DESCRIPTION	QUANTITY	UNIT	PRICE	AMOUNT	FIELD COST	TOTAL FIELD COST	NONCONTRACT COST	CONSTRUCTION COST
03	10			PUMPING PLANT WCC01C (continued)								
		152		Waterways					310,000			
			1	Steel piping & flanges for manifold	13,382	lb	6.00	80,292				
			2	Motor Op. BFV; Class 150; D=12"; 445 lb/valve	1	ea	22,500.00	22,500				
			3	Motor Op. BFV; Class 150; D=16"; 715 lb/valve	1	ea	26,250.00	26,250				
			4	Motor Op. BFV; Class 150; D=18"; 875 lb/valve	1	ea	27,500.00	27,500				
			5	Tilt Disk Ck. Valve; Class 125; D=12"; 650 lb/valve	1	ea	11,000.00	11,000				
			6	Tilt Disk Ck. Valve; Class 125; D=16"; 1050 lb/valve	1	ea	14,000.00	14,000				
			7	Tilt Disk Ck. Valve; Class 125; D=18"; 1535 lb/valve	1	ea	15,000.00	15,000				
			8	Air Valves; D=2"; 75 lbs/valve	4	ea	600.00	2,400				
			9	Air Valves; D=3"; 100 lbs/valve	2	ea	1,000.00	2,000				
			10	Ball Valve for AV; D=2"; 2 lbs/valve	4	ea	300.00	1,200				
			11	Ball Valve for AV; D=3"; 5 lbs/valve	2	ea	550.00	1,100				
			12	Mobilization (+/- 5%)				10,107				
			13	Unlisted Items (+/- 15%)				32,002				
			14	Allowance for Procurement Strategies (+/- 5%)				14,649				
				Subtotal				260,000				
				Contingencies (+/- 20%)				50,000				
				Field Cost - Waterways				310,000				
		153		Waterway Structures					30,000			
			1	Pipe Flowmeter; D = 24"	1	ea	20,000.00	20,000				
			2	Mobilization (+/- 5%)				1,000				
			3	Unlisted Items (+/- 15%)				3,150				
			4	Allowance for Procurement Strategies (+/- 5%)				850				
				Subtotal				25,000				
				Contingencies (+/- 20%)				5,000				
				Field Cost - Waterway Structures				30,000				

CONSTRUCTION COST ESTIMATE

PROJECT: Central Valley Project	PREPARED BY: Regional Office, Sacramento, CA
DIVISION: West San Joaquin Division	ESTIMATE DATE: July 2007 (Rvised after DEC)
UNIT: San Luis Unit -- Drainage System -- Northerly Area	ESTIMATE TYPE: Feasibility
FEATURE: Drainage Feature Re-Evaluation Feasibility Study	PRICE LEVEL: April 2006

PROPERTY CLASS	IDENTIFIED PROPERTY	PLANT ACCOUNT	ITEM	DESCRIPTION	QUANTITY	UNIT	PRICE	AMOUNT	FIELD COST	TOTAL FIELD COST	NONCONTRACT COST	CONSTRUCTION COST
03	10			PUMPING PLANT WCC01C (continued)								
		154		Waterway Protective Works					240,000			
			1	Air Chamber; D=15 ft.; cylindrical shaped; 22,800 lbs	1	ea	160,000.00	160,000				
			2	Mobilization (+/- 5%)				8,000				
			3	Unlisted Items (+/- 15%)				25,200				
			4	Allowance for Procurement Strategies (+/- 5%)				6,800				
				Subtotal				200,000				
				Contingencies (+/- 20%)				40,000				
				Field Cost - Waterway Protective Works				240,000				
		160		Pumps and Prime Movers					1,100,000			
			1	Vertical Turbine Unit; 1-stg; 1770 rpm; Rated 6175 gpm; TDH=86 ft.	8,100	lb	35.00	283,500				
				W/ vert Induction motor @ 200 hp; 1800 rpm; 3ph / 60 hz / 460 v								
			2	Vertical Turbine Unit; 2-stg; 880 rpm; Rated 3700 gpm; TDH=64 ft.	7,400	lb	35.00	259,000				
				W/ vert Induction motor @ 75 hp; 900 rpm; 3ph / 60 hz / 460 v								
			3	Vertical Turbine Unit; 2-stg; 880 rpm; Rated 2200 gpm; TDH=55 ft.	4,200	lb	50.00	210,000				
				W/ vert Induction motor @ 20 hp; 900 rpm; 3ph / 60 hz / 460 v								
			4	Mobilization (+/- 5%)				14,175				
			5	Unlisted Items (+/- 15%)				115,001				
			6	Allowance for Procurement Strategies (+/- 5%)				48,324				
				Subtotal				930,000				
				Contingencies (+/- 20%)				170,000				
				Field Cost - Pumps and Prime Movers				1,100,000				

CONSTRUCTION COST ESTIMATE

PROJECT: Central Valley Project	PREPARED BY: Regional Office, Sacramento, CA
DIVISION: West San Joaquin Division	ESTIMATE DATE: July 2007 (Rvised after DEC)
UNIT: San Luis Unit -- Drainage System -- Northerly Area	ESTIMATE TYPE: Feasibility
FEATURE: Drainage Feature Re-Evaluation Feasibility Study	PRICE LEVEL: April 2006

PROPERTY CLASS	IDENTIFIED PROPERTY	PLANT ACCOUNT	ITEM	DESCRIPTION	QUANTITY	UNIT	PRICE	AMOUNT	FIELD COST	TOTAL FIELD COST	NONCONTRACT COST	CONSTRUCTION COST
03	10			PUMPING PLANT WCC01C (continued)								
		170		Accessory Electrical Equipment					270,000			
			1	F&I PVC coated rigid steel conduit - 3/4 Inch	150	ft	15.00	2,250				
			2	F&I PVC coated rigid steel conduit - 1-1/2 Inch	150	ft	25.00	3,750				
			3	F&I PVC coated rigid steel conduit - 2-1/2 Inch	100	ft	45.00	4,500				
			4	F&I single conductor - 12 AWG	400	ft	2.50	1,000				
			5	F&I single conductor - 250 MCM	400	ft	10.00	4,000				
			6	F&I single conductor - 350 MCM	150	ft	12.00	1,800				
			7	F&I single conductor - 1 AWG	200	ft	5.50	1,100				
			8	F&I single conductor - 4 AWG	50	ft	4.00	200				
			9	F&I single conductor - 8 AWG	200	ft	3.50	700				
			10	F&I grounding system - 4/0 bare copper	200	ft	12.00	2,400				
			11	F&I grounding system - 3/4" dia. 10 foot ground rod	8	ea	175.00	1,400				
			12	F&I Distribution Board w/ enclosure, trips, & A frames	1	ls	2,650.00	2,650				
			13	F&I transformer and load center, w/ enclosure, breakers, and	1	ea	4,000.00	4,000				
				7.5 KVA, single phase, 480V-240/120 V								
			14	F&I Control board for main pump, w/enclosure, relays, switches,	1	ls	150,000.00	150,000				
				fuse block, terminal block, and 200, 75, & 20 hp motor starters								
			15	Mobilization (+/- 5%)				8,988				
			16	Unlisted Items (+/- 15%)				28,311				
			17	Allowance for Procurement Strategies (+/- 5%)				12,952				
				Subtotal				230,000				
				Contingencies (+/- 20%)				40,000				
				Field Cost - Accessory Electrical Equipment				270,000				
		175		Station Equipment					110,000			
			1	Oil filled, distribution power transformer, 1000 kVA; 12.47kV-480V	1	ea	40,000.00	40,000				
			2	7.65-kV MCOV metal oxide distribution class arrester	3	ea	2,000.00	6,000				
			3	3-phase, 15-kV fused disconnect switch, 30E-50E	1	ea	25,000.00	25,000				
			4	Mobilization (+/- 5%)				3,550				
			5	Unlisted Items (+/- 15%)				11,183				

CONSTRUCTION COST ESTIMATE

PROJECT: Central Valley Project	PREPARED BY: Regional Office, Sacramento, CA
DIVISION: West San Joaquin Division	ESTIMATE DATE: July 2007 (Rvised after DEC)
UNIT: San Luis Unit -- Drainage System -- Northerly Area	ESTIMATE TYPE: Feasibility
FEATURE: Drainage Feature Re-Evaluation Feasibility Study	PRICE LEVEL: April 2006

PROPERTY CLASS	IDENTIFIED PROPERTY	PLANT ACCOUNT	ITEM	DESCRIPTION	QUANTITY	UNIT	PRICE	AMOUNT	FIELD COST	TOTAL FIELD COST	NONCONTRACT COST	CONSTRUCTION COST
03	10			PUMPING PLANT WCC01C (continued)								
		175		Station Equipment (continued)								
			6	Allowance for Procurement Strategies (+/- 5%)				4,268				
				Subtotal				90,000				
				Contingencies (+/- 20%)				20,000				
				Field Cost - Station Equipment				110,000				
				FACILITATING SERVICES (2%)								
				INVESTIGATIONS (3%)								
				DESIGNS & SPECIFICATIONS (10%)								
				CONSTRUCTION SUPERVISION (12%)								
				OTHER COSTS (+/- 27%)							1,240,000	

CONSTRUCTION COST ESTIMATE

PROJECT: Central Valley Project	PREPARED BY: Regional Office, Sacramento, CA
DIVISION: West San Joaquin Division	ESTIMATE DATE: July 2007 (Rvised after DEC)
UNIT: San Luis Unit -- Drainage System -- Northerly Area	ESTIMATE TYPE: Feasibility
FEATURE: Drainage Feature Re-Evaluation Feasibility Study	PRICE LEVEL: April 2006

PROPERTY CLASS	IDENTIFIED PROPERTY	PLANT ACCOUNT	ITEM	DESCRIPTION	QUANTITY	UNIT	PRICE	AMOUNT	FIELD COST	TOTAL FIELD COST	NONCONTRACT COST	CONSTRUCTION COST
03	11			PUMPING PLANT FC5 a/b - This plant serves drainage canal FC-5.						8,678,000	2,322,000	11,000,000
				This plant is rated at 510 hp; Q = 31080 GPM; TDH = 294 ft.								
		100		Land and Rights								
				Costs of Land and Rights have been included with other features.								
		130		Structures and Improvements					4,500,000			
			1	Excavation, common	7,085	cy	15.00	106,275				
			2	Backfill, common	5,987	cy	10.00	59,870				
			3	Compacted backfill, common	5,987	cy	10.00	59,870				
			4	Gravel surfacing	276	cy	65.00	17,940				
			5	Unwatering/dewatering, 11.8' depth (7 month duration)	1	ls	1,750,000.00	1,750,000				
			6	Concrete	640	cy	1,000.00	640,000				
			7	Furnishing and handling cement	182	ton	170.00	30,940				
			8	Furnishing and placing reinforcement	95,916	lb	1.75	167,853				
			9	Chain link fencing	547	lf	30.00	16,410				
			10	CMU Wall (8' high, 38 lf long)	304	sf	100.00	30,400				
			11	Structural Steel - Sunshades (31' x 40'; 24,900 lbs)	1	ea	65,000.00	65,000				
			12	Mobilization (+/- 5%)				147,228				
			13	Unlisted Items (+/- 15%)				463,768				
			14	Allowance for Procurement Strategies (+/- 5%)				144,446				
				Subtotal				3,700,000				
				Contingencies (+/- 20%)				800,000				
				Field Cost - Structures and Improvements				4,500,000				

CONSTRUCTION COST ESTIMATE

PROJECT: Central Valley Project	PREPARED BY: Regional Office, Sacramento, CA
DIVISION: West San Joaquin Division	ESTIMATE DATE: July 2007 (Rvised after DEC)
UNIT: San Luis Unit -- Drainage System -- Northerly Area	ESTIMATE TYPE: Feasibility
FEATURE: Drainage Feature Re-Evaluation Feasibility Study	PRICE LEVEL: April 2006

PROPERTY CLASS	IDENTIFIED PROPERTY	PLANT ACCOUNT	ITEM	DESCRIPTION	QUANTITY	UNIT	PRICE	AMOUNT	FIELD COST	TOTAL FIELD COST	NONCONTRACT COST	CONSTRUCTION COST
03	11			PUMPING PLANT FC5 a/b (continued)								
		152		Waterways					605,000			
				(1) Pumping Plant FC5a					155,000			
			1	Steel piping & flanges for manifold	6,555	lb	6.00	39,330				
			2	Motor Op. BFV; Class 150; D=10"; 395 lb/valve	2	ea	20,000.00	40,000				
			3	Tilt Disk Ck. Valve; Class 125; D=10"; 510 lb/valve	2	ea	9,500.00	19,000				
			4	Ball Valve for AV; D=2"; 2 lbs/valve	4	ea	300.00	1,200				
			5	Air Valves; D=2"; 75 lbs/valve	4	ea	600.00	2,400				
			6	Mobilization (+/- 5%)				5,097				
			7	Unlisted Items (+/- 15%)				16,054				
			8	Allowance for Procurement Strategies (+/- 5%)				6,920				
				Subtotal				130,000				
				Contingencies (+/- 20%)				25,000				
				Field Cost - (1) Pumping Plant FC5a				155,000				
				(2) Pumping Plant FC5b					450,000			
			1	Steel piping & flanges for manifold	17,830	lb	6.00	106,980				
			2	Motor Op. BFV; Class 150; D=12"; 445 lb/valve	1	ea	22,500.00	22,500				
			3	Motor Op. BFV; Class 150; D=16"; 715 lb/valve	1	ea	26,250.00	26,250				
			4	Motor Op. BFV; Class 150; D=18"; 875 lb/valve	1	ea	27,500.00	27,500				
			5	Motor Op. BFV; Class 150; D=24"; 1395 lb/valve	1	ea	37,500.00	37,500				
			6	Manually Op. BFV; Class 150; D=4"; 71 lb/valve	1	ea	2,500.00	2,500				
			7	Tilt Disk Ck. Valve; Class 125; D=12"; 650 lb/valve	1	ea	11,000.00	11,000				
			8	Tilt Disk Ck. Valve; Class 125; D=16"; 1050 lb/valve	1	ea	14,000.00	14,000				
			9	Tilt Disk Ck. Valve; Class 125; D=18"; 1535 lb/valve	1	ea	15,000.00	15,000				
			10	Tilt Disk Ck. Valve; Class 125; D=24"; 2650 lb/valve	1	ea	22,000.00	22,000				
			11	Air Valves; D=2"; 75 lbs/valve	5	ea	600.00	3,000				
			12	Air Valves; D=3"; 100 lbs/valve	1	ea	1,000.00	1,000				
			13	Air Valves; D=4"; 170 lbs/valve	2	ea	1,500.00	3,000				
			14	Ball Valve for AV; D=2"; 2 lbs/valve	5	ea	300.00	1,500				
			15	Ball Valve for AV; D=3"; 5 lbs/valve	1	ea	550.00	550				

CONSTRUCTION COST ESTIMATE

PROJECT: Central Valley Project	PREPARED BY: Regional Office, Sacramento, CA
DIVISION: West San Joaquin Division	ESTIMATE DATE: July 2007 (Rvised after DEC)
UNIT: San Luis Unit -- Drainage System -- Northerly Area	ESTIMATE TYPE: Feasibility
FEATURE: Drainage Feature Re-Evaluation Feasibility Study	PRICE LEVEL: April 2006

PROPERTY CLASS	IDENTIFIED PROPERTY	PLANT ACCOUNT	ITEM	DESCRIPTION	QUANTITY	UNIT	PRICE	AMOUNT	FIELD COST	TOTAL FIELD COST	NONCONTRACT COST	CONSTRUCTION COST
03	11			PUMPING PLANT FC5 a/b (continued)								
		152		Waterways (continued)								
				(2) Pumping Plant FC5b (continued)								
			16	Mobilization (+/- 5%)				14,687				
			17	Unlisted Items (+/- 15%)				46,345				
			18	Allowance for Procurement Strategies (+/- 5%)				14,689				
				Subtotal				370,000				
				Contingencies (+/- 20%)				80,000				
				Field Cost - (2) Pumping Plant FC5b				450,000				
				Field Cost - Waterways				605,000				
		153		Waterway Structures					525,000			
				(1) Pumping Plant FC5a					15,000			
			1	Pipe Flowmeter; D = 10"	1	ea	10,000.00	10,000				
			2	Mobilization (+/- 5%)				500				
			3	Unlisted Items (+/- 15%)				1,575				
			4	Allowance for Procurement Strategies (+/- 5%)				425				
				Subtotal				12,500				
				Contingencies (+/- 20%)				2,500				
				Field Cost - (1) Pumping Plant FC5a				15,000				

CONSTRUCTION COST ESTIMATE

PROJECT: Central Valley Project	PREPARED BY: Regional Office, Sacramento, CA
DIVISION: West San Joaquin Division	ESTIMATE DATE: July 2007 (Rvised after DEC)
UNIT: San Luis Unit -- Drainage System -- Northerly Area	ESTIMATE TYPE: Feasibility
FEATURE: Drainage Feature Re-Evaluation Feasibility Study	PRICE LEVEL: April 2006

PROPERTY CLASS	IDENTIFIED PROPERTY	PLANT ACCOUNT	ITEM	DESCRIPTION	QUANTITY	UNIT	PRICE	AMOUNT	FIELD COST	TOTAL FIELD COST	NONCONTRACT COST	CONSTRUCTION COST
03	11			PUMPING PLANT FC5 a/b (continued)								
		153		Waterway Structures (continued)								
				(2) Pumping Plant FC5b					510,000			
			1	Pipe Flowmeter; D = 36"	1	ea	35,000.00	35,000				
			2	F&I Traveling water screen and conveyors: 6000 lb traveling water	11,100	lb	20.00	222,000				
				screen, 2500 lb horizontal conveyor, & 2600 lb elevated conveyor								
			3	F&I and test vertical turbine screen spray pumps: Vertical turbine-type	1	ea	20,000.00	20,000				
				pump, 5 hp, minimum flow 72 gpm @ 112 ft head								
			4	Bulkhead gate guides, Welded stainless steel (no paint)	600	lb	45.00	27,000				
			5	Bulkhead gate, Painted - weld - structural steel	1,800	lb	13.00	23,400				
			6	Trashrack, Painted - weld - structural steel	1,700	lb	14.00	23,800				
			7	Mobilization (+/- 5%)				1,750				
			8	Unlisted Items (+/- 15%)				52,943				
			9	Allowance for Procurement Strategies (+/- 5%)				24,108				
				Subtotal				430,000				
				Contingencies (+/- 20%)				80,000				
				Field Cost - (2) Pumping Plant FC5b				510,000				
				Field Cost - Waterway Structures				525,000				
		154		Waterway Protective Works					480,000			
				(1) Pumping Plant FC5a					240,000			
			1	Air Chamber; D=15 ft.; cylindrical shaped; 22,800 lbs	1	ea	160,000.00	160,000				
			2	Mobilization (+/- 5%)				8,000				
			3	Unlisted Items (+/- 15%)				25,200				
			4	Allowance for Procurement Strategies (+/- 5%)				6,800				
				Subtotal				200,000				
				Contingencies (+/- 20%)				40,000				
				Field Cost - (1) Pumping Plant FC5a				240,000				

CONSTRUCTION COST ESTIMATE

PROJECT: Central Valley Project	PREPARED BY: Regional Office, Sacramento, CA
DIVISION: West San Joaquin Division	ESTIMATE DATE: July 2007 (Rvised after DEC)
UNIT: San Luis Unit -- Drainage System -- Northerly Area	ESTIMATE TYPE: Feasibility
FEATURE: Drainage Feature Re-Evaluation Feasibility Study	PRICE LEVEL: April 2006

PROPERTY CLASS	IDENTIFIED PROPERTY	PLANT ACCOUNT	ITEM	DESCRIPTION	QUANTITY	UNIT	PRICE	AMOUNT	FIELD COST	TOTAL FIELD COST	NONCONTRACT COST	CONSTRUCTION COST
03	11			PUMPING PLANT FC5 a/b (continued)								
		154		Waterway Protective Works (continued)								
				(2) Pumping Plant FC5b					240,000			
			1	Air Chamber; D=15 ft.; cylindrical shaped; 22,800 lbs	1	ea	160,000.00	160,000				
			2	Mobilization (+/- 5%)				8,000				
			3	Unlisted Items (+/- 15%)				25,200				
			4	Allowance for Procurement Strategies (+/- 5%)				6,800				
				Subtotal				200,000				
				Contingencies (+/- 20%)				40,000				
				Field Cost - (2) Pumping Plant FC5b				240,000				
				Field Cost - Waterway Protective Works				480,000				
		160		Pumps and Prime Movers					1,880,000			
				(1) Pumping Plant FC5a					530,000			
			1	2 Vertical Turbine Units; 3-stg; 1170 rpm; Rated 1560 gpm; TDH=79 ft.	7,000	lb	50.00	350,000				
				W/ 2 vert Induction motors @ 50 hp; 1200 rpm; 3ph / 60 hz / 460 v								
			2	Mobilization (+/- 5%)				17,500				
			3	Unlisted Items (+/- 15%)				55,125				
			4	Allowance for Procurement Strategies (+/- 5%)				17,375				
				Subtotal				440,000				
				Contingencies (+/- 20%)				90,000				
				Field Cost - (1) Pumping Plant FC5a				530,000				

CONSTRUCTION COST ESTIMATE

PROJECT: Central Valley Project	PREPARED BY: Regional Office, Sacramento, CA
DIVISION: West San Joaquin Division	ESTIMATE DATE: July 2007 (Rvised after DEC)
UNIT: San Luis Unit -- Drainage System -- Northerly Area	ESTIMATE TYPE: Feasibility
FEATURE: Drainage Feature Re-Evaluation Feasibility Study	PRICE LEVEL: April 2006

PROPERTY CLASS	IDENTIFIED PROPERTY	PLANT ACCOUNT	ITEM	DESCRIPTION	QUANTITY	UNIT	PRICE	AMOUNT	FIELD COST	TOTAL FIELD COST	NONCONTRACT COST	CONSTRUCTION COST
03	11			PUMPING PLANT FC5 a/b (continued)								
		160		Pumps and Prime Movers (continued)								
				(2) Pumping Plant FC5b					1,350,000			
			1	Vertical Turbine Unit; 1-stg; 880 rpm; Rated 12,960 gpm; TDH=60 ft.	11,800	lb	25.00	295,000				
				W/ vert Induction motor @ 250 hp; 900 rpm; 3ph / 60 hz / 460 v								
			2	Vertical Turbine Unit; 1-stg; 1175 rpm; Rated 7700 gpm; TDH=32 ft.	7,000	lb	35.00	245,000				
				W/ vert Induction motor @ 100 hp; 1200 rpm; 3ph / 60 hz / 460 v								
			3	Vertical Turbine Unit; 1-stg; 1180 rpm; Rated 4600 gpm; TDH=24 ft.	4,700	lb	45.00	211,500				
				W/ vert Induction motor @ 40 hp; 1200 rpm; 3ph / 60 hz / 460 v								
			4	Vertical Turbine Unit; 1-stg; 1175 rpm; Rated 2700 gpm; TDH=20 ft.	2,800	lb	60.00	168,000				
				W/ vert Induction motor @ 20 hp; 1800 rpm; 3ph / 60 hz / 460 v								
			5	Mobilization (+/- 5%)				14,750				
			6	Unlisted Items (+/- 15%)				140,138				
			7	Allowance for Procurement Strategies (+/- 5%)				75,613				
				Subtotal				1,150,000				
				Contingencies (+/- 20%)				200,000				
				Field Cost - (2) Pumping Plant FC5b				1,350,000				
				Field Cost - Pumps and Prime Movers				1,880,000				
		170		Accessory Electrical Equipment					485,000			
				(1) Pumping Plant FC5a					155,000			
			1	F&I PVC coated rigid steel conduit - 3/4 Inch	100	ft	15.00	1,500				
			2	F&I PVC coated rigid steel conduit - 1-1/2 Inch	150	ft	25.00	3,750				
			3	F&I single conductor - 12 AWG	400	ft	2.50	1,000				
			4	F&I single conductor - 3/0 AWG	200	ft	10.00	2,000				
			5	F&I single conductor - 4 AWG	300	ft	4.00	1,200				
			6	F&I single conductor - 6 AWG GND	100	ft	4.50	450				
			7	F&I grounding system - 4/0 bare copper	200	ft	12.00	2,400				
			8	F&I grounding system - 3/4" dia. 10 foot ground rod	8	ea	175.00	1,400				
			9	F&I Distribution Board w/ enclosure, trips, & A frames	1	ls	2,650.00	2,650				

CONSTRUCTION COST ESTIMATE

PROJECT: Central Valley Project	PREPARED BY: Regional Office, Sacramento, CA
DIVISION: West San Joaquin Division	ESTIMATE DATE: July 2007 (Rvised after DEC)
UNIT: San Luis Unit -- Drainage System -- Northerly Area	ESTIMATE TYPE: Feasibility
FEATURE: Drainage Feature Re-Evaluation Feasibility Study	PRICE LEVEL: April 2006

PROPERTY CLASS	IDENTIFIED PROPERTY	PLANT ACCOUNT	ITEM	DESCRIPTION	QUANTITY	UNIT	PRICE	AMOUNT	FIELD COST	TOTAL FIELD COST	NONCONTRACT COST	CONSTRUCTION COST
03	11			PUMPING PLANT FC5 a/b (continued)								
		170		Accessory Electrical Equipment (continued)								
				(1) Pumping Plant FC5a (continued)								
			10	F&I transformer and load center, w/ enclosure, breakers, and	1	ea	4,000.00	4,000				
				7.5 KVA, single phase, 480V-240/120 V								
			11	F&I Control board for main pump, w/enclosure, relays, switches,	1	ls	80,000.00	80,000				
				fuse block, terminal block, and two 50 hp motor starters								
			12	Mobilization (+/- 5%)				5,018				
			13	Unlisted Items (+/- 15%)				15,805				
			14	Allowance for Procurement Strategies (+/- 5%)				3,827				
				Subtotal				125,000				
				Contingencies (+/- 20%)				30,000				
				Field Cost - (1) Pumping Plant FC5a				155,000				
				(2) Pumping Plant FC5b					330,000			
			1	F&I PVC coated rigid steel conduit - 3/4 Inch	200	ft	15.00	3,000				
			2	F&I PVC coated rigid steel conduit - 1 Inch	100	ft	17.50	1,750				
			3	F&I PVC coated rigid steel conduit - 2-1/2 Inch	200	ft	45.00	9,000				
			4	F&I single conductor - 12 AWG	400	ft	2.50	1,000				
			5	F&I single conductor - 500 MCM	550	ft	15.00	8,250				
			6	F&I single conductor - 2/0 AWG	150	ft	9.00	1,350				
			7	F&I single conductor - 1/0 AWG	50	ft	7.00	350				
			8	F&I single conductor - 3 AWG	50	ft	6.00	300				
			9	F&I single conductor - 6 AWG	200	ft	5.00	1,000				
			10	F&I single conductor - 8 AWG	200	ft	3.50	700				
			11	F&I grounding system - 4/0 bare copper	200	ft	12.00	2,400				
			12	F&I grounding system - 3/4" dia. 10 foot ground rod	8	ea	175.00	1,400				
			13	F&I Distribution Board w/ enclosure, trips, & A frames	1	ls	2,650.00	2,650				
			14	F&I transformer and load center, w/ enclosure, breakers, and	1	ea	4,000.00	4,000				
				7.5 KVA, single phase, 480V-240/120 V								
			15	F&I Control board for main pump, w/enclosure, relays, switches,	1	ls	180,000.00	180,000				
				fuse block, terminal block, and 250, 100, 40 & 20 hp motor starters								

CONSTRUCTION COST ESTIMATE

PROJECT: Central Valley Project	PREPARED BY: Regional Office, Sacramento, CA
DIVISION: West San Joaquin Division	ESTIMATE DATE: July 2007 (Rvised after DEC)
UNIT: San Luis Unit -- Drainage System -- Northerly Area	ESTIMATE TYPE: Feasibility
FEATURE: Drainage Feature Re-Evaluation Feasibility Study	PRICE LEVEL: April 2006

PROPERTY CLASS	IDENTIFIED PROPERTY	PLANT ACCOUNT	ITEM	DESCRIPTION	QUANTITY	UNIT	PRICE	AMOUNT	FIELD COST	TOTAL FIELD COST	NONCONTRACT COST	CONSTRUCTION COST
03	11			PUMPING PLANT FC5 a/b (continued)								
		170		Accessory Electrical Equipment (continued)								
				(2) Pumping Plant FC5b (continued)								
			16	Mobilization (+/- 5%)				10,858				
			17	Unlisted Items (+/- 15%)				34,201				
			18	Allowance for Procurement Strategies (+/- 5%)				17,791				
				Subtotal				280,000				
				Contingencies (+/- 20%)				50,000				
				Field Cost - (2) Pumping Plant FC5b				330,000				
				Field Cost - Accessory Electrical Equipment				485,000				
		175		Station Equipment					203,000			
				(1) Pumping Plant FC5a					93,000			
			1	Oil filled, distribution power transformer, 300 kVA; 12.47kV-480V	1	ea	30,000.00	30,000				
			2	7.65-kV MCOV metal oxide distribution class arrester	3	ea	2,000.00	6,000				
			3	3-phase, 15-kV fused disconnect switch, 10E-15E	1	ea	25,000.00	25,000				
			4	Mobilization (+/- 5%)				3,050				
			5	Unlisted Items (+/- 15%)				9,608				
			6	Allowance for Procurement Strategies (+/- 5%)				3,343				
				Subtotal				77,000				
				Contingencies (+/- 20%)				16,000				
				Field Cost - (1) Pumping Plant FC5a				93,000				

CONSTRUCTION COST ESTIMATE

PROJECT: Central Valley Project	PREPARED BY: Regional Office, Sacramento, CA
DIVISION: West San Joaquin Division	ESTIMATE DATE: July 2007 (Rvised after DEC)
UNIT: San Luis Unit -- Drainage System -- Northerly Area	ESTIMATE TYPE: Feasibility
FEATURE: Drainage Feature Re-Evaluation Feasibility Study	PRICE LEVEL: April 2006

PROPERTY CLASS	IDENTIFIED PROPERTY	PLANT ACCOUNT	ITEM	DESCRIPTION	QUANTITY	UNIT	PRICE	AMOUNT	FIELD COST	TOTAL FIELD COST	NONCONTRACT COST	CONSTRUCTION COST
03	11			PUMPING PLANT FC5 a/b (continued)								
		175		Station Equipment (continued)								
				(2) Pumping Plant FC5b					110,000			
			1	Oil filled, distribution power transformer, 1000 kVA; 12.47kV-480V	1	ea	40,000.00	40,000				
			2	7.65-kV MCOV metal oxide distribution class arrester	3	ea	2,000.00	6,000				
			3	3-phase, 15-kV fused disconnect switch, 30E-50E	1	ea	25,000.00	25,000				
			4	Mobilization (+/- 5%)				3,550				
			5	Unlisted Items (+/- 15%)				11,183				
			6	Allowance for Procurement Strategies (+/- 5%)				4,268				
				Subtotal				90,000				
				Contingencies (+/- 20%)				20,000				
				Field Cost - (2) Pumping Plant FC5b				110,000				
				Field Cost - Station Equipment				203,000				
				FACILITATING SERVICES (2%)								
				INVESTIGATIONS (3%)								
				DESIGNS & SPECIFICATIONS (10%)								
				CONSTRUCTION SUPERVISION (12%)								
				OTHER COSTS (+/- 27%)							2,322,000	

CONSTRUCTION COST ESTIMATE

PROJECT: Central Valley Project	PREPARED BY: Regional Office, Sacramento, CA
DIVISION: West San Joaquin Division	ESTIMATE DATE: July 2007 (Rvised after DEC)
UNIT: San Luis Unit -- Drainage System -- Northerly Area	ESTIMATE TYPE: Feasibility
FEATURE: Drainage Feature Re-Evaluation Feasibility Study	PRICE LEVEL: April 2006

PROPERTY CLASS	IDENTIFIED PROPERTY	PLANT ACCOUNT	ITEM	DESCRIPTION	QUANTITY	UNIT	PRICE	AMOUNT	FIELD COST	TOTAL FIELD COST	NONCONTRACT COST	CONSTRUCTION COST
03	12			PUMPING PLANT PCC16D - This plant serves the drainage canal at						6,913,000	1,887,000	8,800,000
				Russel Ave. It is rated at 245 hp; Q = 26490 GPM; TDH = 65 ft.								
		100		Land and Rights								
				Costs of Land and Rights have been included with other features.								
		130		Structures and Improvements					4,100,000			
			1	Excavation, common	6,293	cy	15.00	94,395				
			2	Backfill, common	5,358	cy	10.00	53,580				
			3	Compacted backfill, common	5,358	cy	10.00	53,580				
			4	Gravel surfacing	196	cy	65.00	12,740				
			5	Unwatering/dewatering, 11.8' depth (7 month duration)	1	ls	1,750,000.00	1,750,000				
			6	Concrete	508	cy	1,000.00	508,000				
			7	Furnishing and handling cement	144	ton	170.00	24,480				
			8	Furnishing and placing reinforcement	75,916	lb	1.75	132,853				
			9	Chain link fencing	440	lf	30.00	13,200				
			10	CMU Wall (8' high, 27 lf long)	216	sf	100.00	21,600				
			11	Structural Steel - Sunshades (29' x 32'; 19,510 lbs)	1	ea	50,000.00	50,000				
			12	Mobilization (+/- 5%)				135,721				
			13	Unlisted Items (+/- 15%)				427,522				
			14	Allowance for Procurement Strategies (+/- 5%)				122,328				
				Subtotal				3,400,000				
				Contingencies (+/- 20%)				700,000				
				Field Cost - Structures and Improvements				4,100,000				

CONSTRUCTION COST ESTIMATE

PROJECT: Central Valley Project	PREPARED BY: Regional Office, Sacramento, CA
DIVISION: West San Joaquin Division	ESTIMATE DATE: July 2007 (Rvised after DEC)
UNIT: San Luis Unit -- Drainage System -- Northerly Area	ESTIMATE TYPE: Feasibility
FEATURE: Drainage Feature Re-Evaluation Feasibility Study	PRICE LEVEL: April 2006

PROPERTY CLASS	IDENTIFIED PROPERTY	PLANT ACCOUNT	ITEM	DESCRIPTION	QUANTITY	UNIT	PRICE	AMOUNT	FIELD COST	TOTAL FIELD COST	NONCONTRACT COST	CONSTRUCTION COST
03	12			PUMPING PLANT PCC16D (continued)								
		152		Waterways					440,000			
			1	Steel piping & flanges for manifold	16,442	lb	6.00	98,652				
			2	Motor Op. BFV; Class 150; D=10"; 395 lb/valve	1	ea	20,000.00	20,000				
			3	Motor Op. BFV; Class 150; D=16"; 715 lb/valve	1	ea	26,250.00	26,250				
			4	Motor Op. BFV; Class 150; D=20"; 1010 lb/valve	1	ea	30,000.00	30,000				
			5	Motor Op. BFV; Class 150; D=24"; 1395 lb/valve	1	ea	37,500.00	37,500				
			6	Manually Op. BFV; Class 150; D=4"; 71 lb/valve	1	ea	2,500.00	2,500				
			7	Tilt Disk Ck. Valve; Class 125; D=10"; 510 lb/valve	1	ea	9,500.00	9,500				
			8	Tilt Disk Ck. Valve; Class 125; D=16"; 1050 lb/valve	1	ea	14,000.00	14,000				
			9	Tilt Disk Ck. Valve; Class 125; D=20"; 1685 lb/valve	1	ea	17,000.00	17,000				
			10	Tilt Disk Ck. Valve; Class 125; D=24"; 2650 lb/valve	1	ea	22,000.00	22,000				
			11	Air Valves; D=2"; 75 lbs/valve	5	ea	600.00	3,000				
			12	Air Valves; D=3"; 100 lbs/valve	1	ea	1,000.00	1,000				
			13	Air Valves; D=4"; 170 lbs/valve	2	ea	1,500.00	3,000				
			14	Ball Valve for AV; D=2"; 2 lbs/valve	5	ea	300.00	1,500				
			15	Ball Valve for AV; D=3"; 5 lbs/valve	1	ea	550.00	550				
			16	Mobilization (+/- 5%)				14,295				
			17	Unlisted Items (+/- 15%)				45,112				
			18	Allowance for Procurement Strategies (+/- 5%)				14,141				
				Subtotal				360,000				
				Contingencies (+/- 20%)				80,000				
				Field Cost - Waterways				440,000				

CONSTRUCTION COST ESTIMATE

PROJECT: Central Valley Project	PREPARED BY: Regional Office, Sacramento, CA
DIVISION: West San Joaquin Division	ESTIMATE DATE: July 2007 (Rvised after DEC)
UNIT: San Luis Unit -- Drainage System -- Northerly Area	ESTIMATE TYPE: Feasibility
FEATURE: Drainage Feature Re-Evaluation Feasibility Study	PRICE LEVEL: April 2006

PROPERTY CLASS	IDENTIFIED PROPERTY	PLANT ACCOUNT	ITEM	DESCRIPTION	QUANTITY	UNIT	PRICE	AMOUNT	FIELD COST	TOTAL FIELD COST	NONCONTRACT COST	CONSTRUCTION COST
03	12			PUMPING PLANT PCC16D (continued)								
		153		Waterway Structures					510,000			
			1	Pipe Flowmeter; D = 36"	1	ea	35,000.00	35,000				
			2	F&I Traveling water screen and conveyors: 6000 lb traveling water	11,100	lb	20.00	222,000				
				screen, 2500 lb horizontal conveyor, & 2600 lb elevated conveyor								
			3	F&I and test vertical turbine screen spray pumps: Vertical turbine-type	1	ea	20,000.00	20,000				
				pump, 5 hp, minimum flow 72 gpm @ 112 ft head								
			4	Bulkhead gate guides, Welded stainless steel (no paint)	600	lb	45.00	27,000				
			5	Bulkhead gate, Painted - weld - structural steel	1,800	lb	13.00	23,400				
			6	Trashrack, Painted - weld - structural steel	1,700	lb	14.00	23,800				
			7	Mobilization (+/- 5%)				1,750				
			8	Unlisted Items (+/- 15%)				52,943				
			9	Allowance for Procurement Strategies (+/- 5%)				24,108				
				Subtotal				430,000				
				Contingencies (+/- 20%)				80,000				
				Field Cost - Waterway Structures				510,000				
		154		Waterway Protective Works					240,000			
			1	Air Chamber; D=15 ft.; cylindrical shaped; 22,800 lbs	1	ea	160,000.00	160,000				
			2	Mobilization (+/- 5%)				8,000				
			3	Unlisted Items (+/- 15%)				25,200				
			4	Allowance for Procurement Strategies (+/- 5%)				6,800				
				Subtotal				200,000				
				Contingencies (+/- 20%)				40,000				
				Field Cost - Waterway Protective Works				240,000				

CONSTRUCTION COST ESTIMATE

PROJECT: Central Valley Project	PREPARED BY: Regional Office, Sacramento, CA
DIVISION: West San Joaquin Division	ESTIMATE DATE: July 2007 (Rvised after DEC)
UNIT: San Luis Unit -- Drainage System -- Northerly Area	ESTIMATE TYPE: Feasibility
FEATURE: Drainage Feature Re-Evaluation Feasibility Study	PRICE LEVEL: April 2006

PROPERTY CLASS	IDENTIFIED PROPERTY	PLANT ACCOUNT	ITEM	DESCRIPTION	QUANTITY	UNIT	PRICE	AMOUNT	FIELD COST	TOTAL FIELD COST	NONCONTRACT COST	CONSTRUCTION COST
03	12			PUMPING PLANT PCC16D (continued)								
		160		Pumps and Prime Movers					1,300,000			
			1	Vertical Turbine Unit; 1-stg; 880 rpm; Rated 12,390 gpm; TDH=33 ft.	10,400	lb	30.00	312,000				
				W/ vert Induction motor @ 150 hp; 900 rpm; 3ph / 60 hz / 460 v								
			2	Vertical Turbine Unit; 1-stg; 1180 rpm; Rated 7400 gpm; TDH=16 ft.	6,000	lb	40.00	240,000				
				W/ vert Induction motor @ 60 hp; 1200 rpm; 3ph / 60 hz / 460 v								
			3	Vertical Turbine Unit; 1-stg; 1160 rpm; Rated 4400 gpm; TDH=9 ft.	4,100	lb	45.00	184,500				
				W/ vert Induction motor @ 25 hp; 1200 rpm; 3ph / 60 hz / 460 v								
			4	Vertical Turbine Unit; 1-stg; 1160 rpm; Rated 2300 gpm; TDH=7 ft.	2,400	lb	65.00	156,000				
				W/ vert Induction motor @ 10 hp; 1200 rpm; 3ph / 60 hz / 460 v								
			5	Mobilization (+/- 5%)				15,600				
			6	Unlisted Items (+/- 15%)				136,215				
			7	Allowance for Procurement Strategies (+/- 5%)				55,685				
				Subtotal				1,100,000				
				Contingencies (+/- 20%)				200,000				
				Field Cost - Pumps and Prime Movers				1,300,000				
		170		Accessory Electrical Equipment					230,000			
			1	F&I PVC coated rigid steel conduit - 3/4 Inch	150	ft	15.00	2,250				
			2	F&I PVC coated rigid steel conduit - 1 Inch	50	ft	17.50	875				
			3	F&I PVC coated rigid steel conduit - 2-1/2 Inch	150	ft	45.00	6,750				
			4	F&I single conductor - 12 AWG	600	ft	2.50	1,500				
			5	F&I single conductor - 500 MCM	150	ft	15.00	2,250				
			6	F&I single conductor - 3/0 AWG	150	ft	10.00	1,500				
			7	F&I single conductor - 3 AWG	50	ft	6.00	300				
			8	F&I single conductor - 6 AWG	200	ft	5.00	1,000				
			9	F&I single conductor - 10 AWG	200	ft	3.00	600				
			10	F&I grounding system - 4/0 bare copper	200	ft	12.00	2,400				
			11	F&I grounding system - 3/4" dia. 10 foot ground rod	8	ea	175.00	1,400				
			12	F&I Distribution Board w/ enclosure, trips, & A frames	1	ls	2,650.00	2,650				

CONSTRUCTION COST ESTIMATE

PROJECT: Central Valley Project	PREPARED BY: Regional Office, Sacramento, CA
DIVISION: West San Joaquin Division	ESTIMATE DATE: July 2007 (Rvised after DEC)
UNIT: San Luis Unit -- Drainage System -- Northerly Area	ESTIMATE TYPE: Feasibility
FEATURE: Drainage Feature Re-Evaluation Feasibility Study	PRICE LEVEL: April 2006

PROPERTY CLASS	IDENTIFIED PROPERTY	PLANT ACCOUNT	ITEM	DESCRIPTION	QUANTITY	UNIT	PRICE	AMOUNT	FIELD COST	TOTAL FIELD COST	NONCONTRACT COST	CONSTRUCTION COST
03	12			PUMPING PLANT PCC16D (continued)								
		170		Accessory Electrical Equipment (continued)								
			13	F&I transformer and load center, w/ enclosure, breakers, and	1	ea	4,000.00	4,000				
				7.5 KVA, single phase, 480V-240/120 V								
			14	F&I Control board for main pump, w/enclosure, relays, switches,	1	ls	125,000.00	125,000				
				fuse block, terminal block, and 150, 60, 25, & 10 hp motor starters								
			15	Mobilization (+/- 5%)				7,624				
			16	Unlisted Items (+/- 15%)				24,015				
			17	Allowance for Procurement Strategies (+/- 5%)				10,886				
				Subtotal				195,000				
				Contingencies (+/- 20%)				35,000				
				Field Cost - Accessory Electrical Equipment				230,000				
		175		Station Equipment					93,000			
			1	Oil filled, distribution power transformer, 300 kVA; 12.47kV-480V	1	ea	30,000.00	30,000				
			2	7.65-kV MCOV metal oxide distribution class arrester	3	ea	2,000.00	6,000				
			3	3-phase, 15-kV fused disconnect switch, 10E-15E	1	ea	25,000.00	25,000				
			4	Mobilization (+/- 5%)				3,050				
			5	Unlisted Items (+/- 15%)				9,608				

CONSTRUCTION COST ESTIMATE

PROJECT: Central Valley Project	PREPARED BY: Regional Office, Sacramento, CA
DIVISION: West San Joaquin Division	ESTIMATE DATE: July 2007 (Rvised after DEC)
UNIT: San Luis Unit -- Drainage System -- Northerly Area	ESTIMATE TYPE: Feasibility
FEATURE: Drainage Feature Re-Evaluation Feasibility Study	PRICE LEVEL: April 2006

PROPERTY CLASS	IDENTIFIED PROPERTY	PLANT ACCOUNT	ITEM	DESCRIPTION	QUANTITY	UNIT	PRICE	AMOUNT	FIELD COST	TOTAL FIELD COST	NONCONTRACT COST	CONSTRUCTION COST
03	12			PUMPING PLANT PCC16D (continued)								
		175		Station Equipment (continued)								
			6	Allowance for Procurement Strategies (+/- 5%)				3,343				
				Subtotal				77,000				
				Contingencies (+/- 20%)				16,000				
				Field Cost - Station Equipment				93,000				
				FACILITATING SERVICES (2%)								
				INVESTIGATIONS (3%)								
				DESIGNS & SPECIFICATIONS (10%)								
				CONSTRUCTION SUPERVISION (12%)								
				OTHER COSTS (+/- 27%)							1,887,000	

CONSTRUCTION COST ESTIMATE

PROJECT: Central Valley Project	PREPARED BY: Regional Office, Sacramento, CA
DIVISION: West San Joaquin Division	ESTIMATE DATE: July 2007 (Rvised after DEC)
UNIT: San Luis Unit -- Drainage System -- Northerly Area	ESTIMATE TYPE: Feasibility
FEATURE: Drainage Feature Re-Evaluation Feasibility Study	PRICE LEVEL: April 2006

PROPERTY CLASS	IDENTIFIED PROPERTY	PLANT ACCOUNT	ITEM	DESCRIPTION	QUANTITY	UNIT	PRICE	AMOUNT	FIELD COST	TOTAL FIELD COST	NONCONTRACT COST	CONSTRUCTION COST
03	13			PUMPING PLANT PCC06D - This plant serves the drainage canal						6,913,000	1,887,000	8,800,000
				at PO-2. It is rated at 245 hp; Q = 26490 GPM; TDH = 65 ft.								
		100		Land and Rights								
				Costs of Land and Rights have been included with other features.								
		130		Structures and Improvements					4,100,000			
			1	Excavation, common	6,293	cy	15.00	94,395				
			2	Backfill, common	5,358	cy	10.00	53,580				
			3	Compacted backfill, common	5,358	cy	10.00	53,580				
			4	Gravel surfacing	196	cy	65.00	12,740				
			5	Unwatering/dewatering, 11.8' depth (7 month duration)	1	ls	1,750,000.00	1,750,000				
			6	Concrete	508	cy	1,000.00	508,000				
			7	Furnishing and handling cement	144	ton	170.00	24,480				
			8	Furnishing and placing reinforcement	75,916	lb	1.75	132,853				
			9	Chain link fencing	440	lf	30.00	13,200				
			10	CMU Wall (8' high, 27 lf long)	216	sf	100.00	21,600				
			11	Structural Steel - Sunshades (29' x 32'; 19,510 lbs)	1	ea	50,000.00	50,000				
			12	Mobilization (+/- 5%)				135,721				
			13	Unlisted Items (+/- 15%)				427,522				
			14	Allowance for Procurement Strategies (+/- 5%)				122,328				
				Subtotal				3,400,000				
				Contingencies (+/- 20%)				700,000				
				Field Cost - Structures and Improvements				4,100,000				

CONSTRUCTION COST ESTIMATE

PROJECT: Central Valley Project	PREPARED BY: Regional Office, Sacramento, CA
DIVISION: West San Joaquin Division	ESTIMATE DATE: July 2007 (Rvised after DEC)
UNIT: San Luis Unit -- Drainage System -- Northerly Area	ESTIMATE TYPE: Feasibility
FEATURE: Drainage Feature Re-Evaluation Feasibility Study	PRICE LEVEL: April 2006

PROPERTY CLASS	IDENTIFIED PROPERTY	PLANT ACCOUNT	ITEM	DESCRIPTION	QUANTITY	UNIT	PRICE	AMOUNT	FIELD COST	TOTAL FIELD COST	NONCONTRACT COST	CONSTRUCTION COST
03	13			PUMPING PLANT PCC06D (continued)								
		152		Waterways					440,000			
			1	Steel piping & flanges for manifold	16,442	lb	6.00	98,652				
			2	Motor Op. BFV; Class 150; D=10"; 395 lb/valve	1	ea	20,000.00	20,000				
			3	Motor Op. BFV; Class 150; D=16"; 715 lb/valve	1	ea	26,250.00	26,250				
			4	Motor Op. BFV; Class 150; D=20"; 1010 lb/valve	1	ea	30,000.00	30,000				
			5	Motor Op. BFV; Class 150; D=24"; 1395 lb/valve	1	ea	37,500.00	37,500				
			6	Manually Op. BFV; Class 150; D=4"; 71 lb/valve	1	ea	2,500.00	2,500				
			7	Tilt Disk Ck. Valve; Class 125; D=10"; 510 lb/valve	1	ea	9,500.00	9,500				
			8	Tilt Disk Ck. Valve; Class 125; D=16"; 1050 lb/valve	1	ea	14,000.00	14,000				
			9	Tilt Disk Ck. Valve; Class 125; D=20"; 1685 lb/valve	1	ea	17,000.00	17,000				
			10	Tilt Disk Ck. Valve; Class 125; D=24"; 2650 lb/valve	1	ea	22,000.00	22,000				
			11	Air Valves; D=2"; 75 lbs/valve	5	ea	600.00	3,000				
			12	Air Valves; D=3"; 100 lbs/valve	1	ea	1,000.00	1,000				
			13	Air Valves; D=4"; 170 lbs/valve	2	ea	1,500.00	3,000				
			14	Ball Valve for AV; D=2"; 2 lbs/valve	5	ea	300.00	1,500				
			15	Ball Valve for AV; D=3"; 5 lbs/valve	1	ea	550.00	550				
			16	Mobilization (+/- 5%)				14,295				
			17	Unlisted Items (+/- 15%)				45,112				
			18	Allowance for Procurement Strategies (+/- 5%)				14,141				
				Subtotal				360,000				
				Contingencies (+/- 20%)				80,000				
				Field Cost - Waterways				440,000				

CONSTRUCTION COST ESTIMATE

PROJECT: Central Valley Project	PREPARED BY: Regional Office, Sacramento, CA
DIVISION: West San Joaquin Division	ESTIMATE DATE: July 2007 (Rvised after DEC)
UNIT: San Luis Unit -- Drainage System -- Northerly Area	ESTIMATE TYPE: Feasibility
FEATURE: Drainage Feature Re-Evaluation Feasibility Study	PRICE LEVEL: April 2006

PROPERTY CLASS	IDENTIFIED PROPERTY	PLANT ACCOUNT	ITEM	DESCRIPTION	QUANTITY	UNIT	PRICE	AMOUNT	FIELD COST	TOTAL FIELD COST	NONCONTRACT COST	CONSTRUCTION COST
03	13			PUMPING PLANT PCC06D (continued)								
		153		Waterway Structures					510,000			
			1	Pipe Flowmeter; D = 36"	1	ea	35,000.00	35,000				
			2	F&I Traveling water screen and conveyors: 6000 lb traveling water	11,100	lb	20.00	222,000				
				screen, 2500 lb horizontal conveyor, & 2600 lb elevated conveyor								
			3	F&I and test vertical turbine screen spray pumps: Vertical turbine-type	1	ea	20,000.00	20,000				
				pump, 5 hp, minimum flow 72 gpm @ 112 ft head								
			4	Bulkhead gate guides, Welded stainless steel (no paint)	600	lb	45.00	27,000				
			5	Bulkhead gate, Painted - weld - structural steel	1,800	lb	13.00	23,400				
			6	Trashrack, Painted - weld - structural steel	1,700	lb	14.00	23,800				
			7	Mobilization (+/- 5%)				1,750				
			8	Unlisted Items (+/- 15%)				52,943				
			9	Allowance for Procurement Strategies (+/- 5%)				24,108				
				Subtotal				430,000				
				Contingencies (+/- 20%)				80,000				
				Field Cost - Waterway Structures				510,000				
		154		Waterway Protective Works					240,000			
			1	Air Chamber; D=15 ft.; cylindrical shaped; 22,800 lbs	1	ea	160,000.00	160,000				
			2	Mobilization (+/- 5%)				8,000				
			3	Unlisted Items (+/- 15%)				25,200				
			4	Allowance for Procurement Strategies (+/- 5%)				6,800				
				Subtotal				200,000				
				Contingencies (+/- 20%)				40,000				
				Field Cost - Waterway Protective Works				240,000				

CONSTRUCTION COST ESTIMATE

PROJECT: Central Valley Project	PREPARED BY: Regional Office, Sacramento, CA
DIVISION: West San Joaquin Division	ESTIMATE DATE: July 2007 (Rvised after DEC)
UNIT: San Luis Unit -- Drainage System -- Northerly Area	ESTIMATE TYPE: Feasibility
FEATURE: Drainage Feature Re-Evaluation Feasibility Study	PRICE LEVEL: April 2006

PROPERTY CLASS	IDENTIFIED PROPERTY	PLANT ACCOUNT	ITEM	DESCRIPTION	QUANTITY	UNIT	PRICE	AMOUNT	FIELD COST	TOTAL FIELD COST	NONCONTRACT COST	CONSTRUCTION COST
03	13			PUMPING PLANT PCC06D (continued)								
		160		Pumps and Prime Movers					1,300,000			
			1	Vertical Turbine Unit; 1-stg; 880 rpm; Rated 12,390 gpm; TDH=33 ft.	10,400	lb	30.00	312,000				
				W/ vert Induction motor @ 150 hp; 900 rpm; 3ph / 60 hz / 460 v								
			2	Vertical Turbine Unit; 1-stg; 1180 rpm; Rated 7400 gpm; TDH=16 ft.	6,000	lb	40.00	240,000				
				W/ vert Induction motor @ 60 hp; 1200 rpm; 3ph / 60 hz / 460 v								
			3	Vertical Turbine Unit; 1-stg; 1160 rpm; Rated 4400 gpm; TDH=9 ft.	4,100	lb	45.00	184,500				
				W/ vert Induction motor @ 25 hp; 1200 rpm; 3ph / 60 hz / 460 v								
			4	Vertical Turbine Unit; 1-stg; 1160 rpm; Rated 2300 gpm; TDH=7 ft.	2,400	lb	65.00	156,000				
				W/ vert Induction motor @ 10 hp; 1200 rpm; 3ph / 60 hz / 460 v								
			5	Mobilization (+/- 5%)				15,600				
			6	Unlisted Items (+/- 15%)				136,215				
			7	Allowance for Procurement Strategies (+/- 5%)				55,685				
				Subtotal				1,100,000				
				Contingencies (+/- 20%)				200,000				
				Field Cost - Pumps and Prime Movers				1,300,000				
		170		Accessory Electrical Equipment					230,000			
			1	F&I PVC coated rigid steel conduit - 3/4 Inch	150	ft	15.00	2,250				
			2	F&I PVC coated rigid steel conduit - 1 Inch	50	ft	17.50	875				
			3	F&I PVC coated rigid steel conduit - 2-1/2 Inch	150	ft	45.00	6,750				
			4	F&I single conductor - 12 AWG	600	ft	2.50	1,500				
			5	F&I single conductor - 500 MCM	150	ft	15.00	2,250				
			6	F&I single conductor - 3/0 AWG	150	ft	10.00	1,500				
			7	F&I single conductor - 3 AWG	50	ft	6.00	300				
			8	F&I single conductor - 6 AWG	200	ft	5.00	1,000				
			9	F&I single conductor - 10 AWG	200	ft	3.00	600				
			10	F&I grounding system - 4/0 bare copper	200	ft	12.00	2,400				
			11	F&I grounding system - 3/4" dia. 10 foot ground rod	8	ea	175.00	1,400				
			12	F&I Distribution Board w/ enclosure, trips, & A frames	1	ls	2,650.00	2,650				

CONSTRUCTION COST ESTIMATE

PROJECT: Central Valley Project	PREPARED BY: Regional Office, Sacramento, CA
DIVISION: West San Joaquin Division	ESTIMATE DATE: July 2007 (Rvised after DEC)
UNIT: San Luis Unit -- Drainage System -- Northerly Area	ESTIMATE TYPE: Feasibility
FEATURE: Drainage Feature Re-Evaluation Feasibility Study	PRICE LEVEL: April 2006

PROPERTY CLASS	IDENTIFIED PROPERTY	PLANT ACCOUNT	ITEM	DESCRIPTION	QUANTITY	UNIT	PRICE	AMOUNT	FIELD COST	TOTAL FIELD COST	NONCONTRACT COST	CONSTRUCTION COST
03	13			PUMPING PLANT PCC06D (continued)								
		170		Accessory Electrical Equipment (continued)								
			13	F&I transformer and load center, w/ enclosure, breakers, and	1	ea	4,000.00	4,000				
				7.5 KVA, single phase, 480V-240/120 V								
			14	F&I Control board for main pump, w/enclosure, relays, switches,	1	ls	125,000.00	125,000				
				fuse block, terminal block, and 150, 60, 25, & 10 hp motor starters								
			15	Mobilization (+/- 5%)				7,624				
			16	Unlisted Items (+/- 15%)				24,015				
			17	Allowance for Procurement Strategies (+/- 5%)				10,886				
				Subtotal				195,000				
				Contingencies (+/- 20%)				35,000				
				Field Cost - Accessory Electrical Equipment				230,000				
		175		Station Equipment					93,000			
			1	Oil filled, distribution power transformer, 300 kVA; 12.47kV-480V	1	ea	30,000.00	30,000				
			2	7.65-kV MCOV metal oxide distribution class arrester	3	ea	2,000.00	6,000				
			3	3-phase, 15-kV fused disconnect switch, 10E-15E	1	ea	25,000.00	25,000				
			4	Mobilization (+/- 5%)				3,050				
			5	Unlisted Items (+/- 15%)				9,608				

CONSTRUCTION COST ESTIMATE

PROJECT: Central Valley Project	PREPARED BY: Regional Office, Sacramento, CA
DIVISION: West San Joaquin Division	ESTIMATE DATE: July 2007 (Rvised after DEC)
UNIT: San Luis Unit -- Drainage System -- Northerly Area	ESTIMATE TYPE: Feasibility
FEATURE: Drainage Feature Re-Evaluation Feasibility Study	PRICE LEVEL: April 2006

PROPERTY CLASS	IDENTIFIED PROPERTY	PLANT ACCOUNT	ITEM	DESCRIPTION	QUANTITY	UNIT	PRICE	AMOUNT	FIELD COST	TOTAL FIELD COST	NONCONTRACT COST	CONSTRUCTION COST
03	13			PUMPING PLANT PCC06D (continued)								
		175		Station Equipment (continued)								
			6	Allowance for Procurement Strategies (+/- 5%)				3,343				
				Subtotal				77,000				
				Contingencies (+/- 20%)				16,000				
				Field Cost - Station Equipment				93,000				
				FACILITATING SERVICES (2%)								
				INVESTIGATIONS (3%)								
				DESIGNS & SPECIFICATIONS (10%)								
				CONSTRUCTION SUPERVISION (12%)								
				OTHER COSTS (+/- 27%)							1,887,000	

CONSTRUCTION COST ESTIMATE

PROJECT: Central Valley Project	PREPARED BY: Regional Office, Sacramento, CA
DIVISION: West San Joaquin Division	ESTIMATE DATE: July 2007 (Rvised after DEC)
UNIT: San Luis Unit -- Drainage System -- Northerly Area	ESTIMATE TYPE: Feasibility
FEATURE: Drainage Feature Re-Evaluation Feasibility Study	PRICE LEVEL: April 2006

PROPERTY CLASS	IDENTIFIED PROPERTY	PLANT ACCOUNT	ITEM	DESCRIPTION	QUANTITY	UNIT	PRICE	AMOUNT	FIELD COST	TOTAL FIELD COST	NONCONTRACT COST	CONSTRUCTION COST
03	14			PUMPING PLANT PE-14 - This plant serves drainage canals at PO-2						8,583,000	2,417,000	11,000,000
				and Russel Ave. It is rated at 245 hp; Q = 26490 GPM; TDH = 65 ft.								
		100		Land and Rights								
				Costs of Land and Rights have been included with other features.								
		130		Structures and Improvements					4,000,000			
			1	Excavation, common	5,829	cy	15.00	87,435				
			2	Backfill, common	4,931	cy	10.00	49,310				
			3	Compacted backfill, common	4,931	cy	10.00	49,310				
			4	Gravel surfacing	122	cy	65.00	7,930				
			5	Unwatering/dewatering, 11.8' depth (7 month duration)	1	ls	1,750,000.00	1,750,000				
			6	Concrete	468	cy	1,000.00	468,000				
			7	Furnishing and handling cement	132	ton	170.00	22,440				
			8	Furnishing and placing reinforcement	70,016	lb	1.75	122,528				
			9	Chain link fencing	349	lf	30.00	10,470				
			10	CMU Wall (8' high, 27 lf long)	216	sf	100.00	21,600				
			11	Structural Steel - Sunshades (29' x 32'; 19,510 lbs)	1	ea	50,000.00	50,000				
			12	Mobilization (+/- 5%)				131,951				
			13	Unlisted Items (+/- 15%)				415,646				
			14	Allowance for Procurement Strategies (+/- 5%)				113,380				
				Subtotal				3,300,000				
				Contingencies (+/- 20%)				700,000				
				Field Cost - Structures and Improvements				4,000,000				

CONSTRUCTION COST ESTIMATE

PROJECT: Central Valley Project	PREPARED BY: Regional Office, Sacramento, CA
DIVISION: West San Joaquin Division	ESTIMATE DATE: July 2007 (Rvised after DEC)
UNIT: San Luis Unit -- Drainage System -- Northerly Area	ESTIMATE TYPE: Feasibility
FEATURE: Drainage Feature Re-Evaluation Feasibility Study	PRICE LEVEL: April 2006

PROPERTY CLASS	IDENTIFIED PROPERTY	PLANT ACCOUNT	ITEM	DESCRIPTION	QUANTITY	UNIT	PRICE	AMOUNT	FIELD COST	TOTAL FIELD COST	NONCONTRACT COST	CONSTRUCTION COST
03	14			PUMPING PLANT PE-14 (continued)								
		152		Waterways					370,000			
			1	Steel piping & flanges for manifold	9,697	lb	6.00	58,182				
			2	Motor Op. BFV; Class 150; D=10"; 395 lb/valve	1	ea	20,000.00	20,000				
			3	Motor Op. BFV; Class 150; D=16"; 715 lb/valve	1	ea	26,250.00	26,250				
			4	Motor Op. BFV; Class 150; D=20"; 1010 lb/valve	1	ea	30,000.00	30,000				
			5	Motor Op. BFV; Class 150; D=24"; 1395 lb/valve	1	ea	37,500.00	37,500				
			6	Manually Op. BFV; Class 150; D=4"; 71 lb/valve	1	ea	2,500.00	2,500				
			7	Tilt Disk Ck. Valve; Class 125; D=10"; 510 lb/valve	1	ea	9,500.00	9,500				
			8	Tilt Disk Ck. Valve; Class 125; D=16"; 1050 lb/valve	1	ea	14,000.00	14,000				
			9	Tilt Disk Ck. Valve; Class 125; D=20"; 1685 lb/valve	1	ea	17,000.00	17,000				
			10	Tilt Disk Ck. Valve; Class 125; D=24"; 2650 lb/valve	1	ea	22,000.00	22,000				
			11	Air Valves; D=2"; 75 lbs/valve	5	ea	600.00	3,000				
			12	Air Valves; D=3"; 100 lbs/valve	1	ea	1,000.00	1,000				
			13	Air Valves; D=4"; 170 lbs/valve	2	ea	1,500.00	3,000				
			14	Ball Valve for AV; D=2"; 2 lbs/valve	5	ea	300.00	1,500				
			15	Ball Valve for AV; D=3"; 5 lbs/valve	1	ea	550.00	550				
			16	Mobilization (+/- 5%)				12,272				
			17	Unlisted Items (+/- 15%)				38,738				
			18	Allowance for Procurement Strategies (+/- 5%)				13,008				
				Subtotal				310,000				
				Contingencies (+/- 20%)				60,000				
				Field Cost - Waterways				370,000				

CONSTRUCTION COST ESTIMATE

PROJECT: Central Valley Project	PREPARED BY: Regional Office, Sacramento, CA
DIVISION: West San Joaquin Division	ESTIMATE DATE: July 2007 (Rvised after DEC)
UNIT: San Luis Unit -- Drainage System -- Northerly Area	ESTIMATE TYPE: Feasibility
FEATURE: Drainage Feature Re-Evaluation Feasibility Study	PRICE LEVEL: April 2006

PROPERTY CLASS	IDENTIFIED PROPERTY	PLANT ACCOUNT	ITEM	DESCRIPTION	QUANTITY	UNIT	PRICE	AMOUNT	FIELD COST	TOTAL FIELD COST	NONCONTRACT COST	CONSTRUCTION COST
03	14			PUMPING PLANT PE-14 (continued)								
		153		Waterway Structures					2,590,000			
				(1) Flow Meter					490,000			
			1	Pipe Flowmeter; D = 24"	1	ea	20,000.00	20,000				
			2	F&I Traveling water screen and conveyors: 6000 lb traveling water	11,100	lb	20.00	222,000				
				screen, 2500 lb horizontal conveyor, & 2600 lb elevated conveyor								
			3	F&I and test vertical turbine screen spray pumps: Vertical turbine-type	1	ea	20,000.00	20,000				
				pump, 5 hp, minimum flow 72 gpm @ 112 ft head								
			4	Bulkhead gate guides, Welded stainless steel (no paint)	600	lb	45.00	27,000				
			5	Bulkhead gate, Painted - weld - structural steel	1,800	lb	13.00	23,400				
			6	Trashrack, Painted - weld - structural steel	1,700	lb	14.00	23,800				
			7	Mobilization (+/- 5%)				1,000				
			8	Unlisted Items (+/- 15%)				50,580				
			9	Allowance for Procurement Strategies (+/- 5%)				22,220				
				Subtotal				410,000				
				Contingencies (+/- 20%)				80,000				
				Field Cost - (1) Flow Meter				490,000				
				(2) Regulating Tank; D = 65 ft; H = 19 ft					2,100,000			
			1	Strip and Clear, 12" depth	440	cy	6.50	2,860				
			2	Compacting embankment	900	cy	15.00	13,500				
			3	Gravel surfacing	140	cy	65.00	9,100				
			4	Concrete	400	cy	1,000.00	400,000				
			5	Cement	110	ton	170.00	18,700				
			6	Reinforcement	59,000	lb	1.75	103,250				
			7	Chain link fence	410	lf	30.00	12,300				
			8	Precast Concrete Piles, 12" x 12" (reinforced, 60 ft deep)	80	ea	4,000.00	320,000				
			9	F&I Steel Regulating Tank; D=65 ft; H=19 ft; w/ roof	1	ea	475,000.00	475,000				
			10	Mobilization (+/- 5%)				67,736				
			11	Unlisted Items (+/- 15%)				213,367				

CONSTRUCTION COST ESTIMATE

PROJECT: Central Valley Project	PREPARED BY: Regional Office, Sacramento, CA
DIVISION: West San Joaquin Division	ESTIMATE DATE: July 2007 (Rvised after DEC)
UNIT: San Luis Unit -- Drainage System -- Northerly Area	ESTIMATE TYPE: Feasibility
FEATURE: Drainage Feature Re-Evaluation Feasibility Study	PRICE LEVEL: April 2006

PROPERTY CLASS	IDENTIFIED PROPERTY	PLANT ACCOUNT	ITEM	DESCRIPTION	QUANTITY	UNIT	PRICE	AMOUNT	FIELD COST	TOTAL FIELD COST	NONCONTRACT COST	CONSTRUCTION COST
03	14			PUMPING PLANT PE-14 (continued)								
		153		Waterway Structures (continued)								
				(2) Regulating Tank (continued)								
			12	Allowance for Procurement Strategies (+/- 5%)				64,188				
				Subtotal				1,700,000				
				Contingencies (+/- 20%)				400,000				
				Field Cost - (2) Regulating Tank				2,100,000				
				Field Cost - Waterway Structures				2,590,000				
		160		Pumps and Prime Movers					1,300,000			
			1	Vertical Turbine Unit; 1-stg; 880 rpm; Rated 12,390 gpm; TDH=33 ft.	10,400	lb	30.00	312,000				
				W/ vert Induction motor @ 150 hp; 900 rpm; 3ph / 60 hz / 460 v								
			2	Vertical Turbine Unit; 1-stg; 1180 rpm; Rated 7400 gpm; TDH=16 ft.	6,000	lb	40.00	240,000				
				W/ vert Induction motor @ 60 hp; 1200 rpm; 3ph / 60 hz / 460 v								
			3	Vertical Turbine Unit; 1-stg; 1160 rpm; Rated 4400 gpm; TDH=9 ft.	4,100	lb	45.00	184,500				
				W/ vert Induction motor @ 25 hp; 1200 rpm; 3ph / 60 hz / 460 v								
			4	Vertical Turbine Unit; 1-stg; 1160 rpm; Rated 2300 gpm; TDH=7 ft.	2,400	lb	65.00	156,000				
				W/ vert Induction motor @ 10 hp; 1200 rpm; 3ph / 60 hz / 460 v								
			5	Mobilization (+/- 5%)				15,600				
			6	Unlisted Items (+/- 15%)				136,215				
			7	Allowance for Procurement Strategies (+/- 5%)				55,685				
				Subtotal				1,100,000				
				Contingencies (+/- 20%)				200,000				
				Field Cost - Pumps and Prime Movers				1,300,000				

CONSTRUCTION COST ESTIMATE

PROJECT: Central Valley Project	PREPARED BY: Regional Office, Sacramento, CA
DIVISION: West San Joaquin Division	ESTIMATE DATE: July 2007 (Rvised after DEC)
UNIT: San Luis Unit -- Drainage System -- Northerly Area	ESTIMATE TYPE: Feasibility
FEATURE: Drainage Feature Re-Evaluation Feasibility Study	PRICE LEVEL: April 2006

PROPERTY CLASS	IDENTIFIED PROPERTY	PLANT ACCOUNT	ITEM	DESCRIPTION	QUANTITY	UNIT	PRICE	AMOUNT	FIELD COST	TOTAL FIELD COST	NONCONTRACT COST	CONSTRUCTION COST
03	14			PUMPING PLANT PE-14 (continued)								
		170		Accessory Electrical Equipment					230,000			
			1	F&I PVC coated rigid steel conduit - 3/4 Inch	150	ft	15.00	2,250				
			2	F&I PVC coated rigid steel conduit - 1 Inch	50	ft	17.50	875				
			3	F&I PVC coated rigid steel conduit - 2-1/2 Inch	150	ft	45.00	6,750				
			4	F&I single conductor - 12 AWG	600	ft	2.50	1,500				
			5	F&I single conductor - 500 MCM	150	ft	15.00	2,250				
			6	F&I single conductor - 3/0 AWG	150	ft	10.00	1,500				
			7	F&I single conductor - 3 AWG	50	ft	6.00	300				
			8	F&I single conductor - 6 AWG	200	ft	5.00	1,000				
			9	F&I single conductor - 10 AWG	200	ft	3.00	600				
			10	F&I grounding system - 4/0 bare copper	200	ft	12.00	2,400				
			11	F&I grounding system - 3/4" dia. 10 foot ground rod	8	ea	175.00	1,400				
			12	F&I Distribution Board w/ enclosure, trips, & A frames	1	ls	2,650.00	2,650				
			13	F&I transformer and load center, w/ enclosure, breakers, and	1	ea	4,000.00	4,000				
				7.5 KVA, single phase, 480V-240/120 V								
			14	F&I Control board for main pump, w/enclosure, relays, switches,	1	ls	125,000.00	125,000				
				fuse block, terminal block, and 150, 60, 25, & 10 hp motor starters								
			15	Mobilization (+/- 5%)				7,624				
			16	Unlisted Items (+/- 15%)				24,015				
			17	Allowance for Procurement Strategies (+/- 5%)				10,886				
				Subtotal				195,000				
				Contingencies (+/- 20%)				35,000				
				Field Cost - Accessory Electrical Equipment				230,000				
		175		Station Equipment					93,000			
			1	Oil filled, distribution power transformer, 300 kVA; 12.47kV-480V	1	ea	30,000.00	30,000				
			2	7.65-kV MCOV metal oxide distribution class arrester	3	ea	2,000.00	6,000				
			3	3-phase, 15-kV fused disconnect switch, 10E-15E	1	ea	25,000.00	25,000				
			4	Mobilization (+/- 5%)				3,050				
			5	Unlisted Items (+/- 15%)				9,608				

CONSTRUCTION COST ESTIMATE

PROJECT: Central Valley Project	PREPARED BY: Regional Office, Sacramento, CA
DIVISION: West San Joaquin Division	ESTIMATE DATE: July 2007 (Rvised after DEC)
UNIT: San Luis Unit -- Drainage System -- Northerly Area	ESTIMATE TYPE: Feasibility
FEATURE: Drainage Feature Re-Evaluation Feasibility Study	PRICE LEVEL: April 2006

PROPERTY CLASS	IDENTIFIED PROPERTY	PLANT ACCOUNT	ITEM	DESCRIPTION	QUANTITY	UNIT	PRICE	AMOUNT	FIELD COST	TOTAL FIELD COST	NONCONTRACT COST	CONSTRUCTION COST
03	14			PUMPING PLANT PE-14 (continued)								
		175		Station Equipment (continued)								
			6	Allowance for Procurement Strategies (+/- 5%)				3,343				
				Subtotal				77,000				
				Contingencies (+/- 20%)				16,000				
				Field Cost - Station Equipment				93,000				
				FACILITATING SERVICES (2%)								
				INVESTIGATIONS (3%)								
				DESIGNS & SPECIFICATIONS (10%)								
				CONSTRUCTION SUPERVISION (12%)								
				OTHER COSTS (+/- 27%)							2,417,000	

CONSTRUCTION COST ESTIMATE

PROJECT: Central Valley Project	PREPARED BY: Regional Office, Sacramento, CA
DIVISION: West San Joaquin Division	ESTIMATE DATE: July 2007 (Rvised after DEC)
UNIT: San Luis Unit -- Drainage System -- Northerly Area	ESTIMATE TYPE: Feasibility
FEATURE: Drainage Feature Re-Evaluation Feasibility Study	PRICE LEVEL: April 2006

PROPERTY CLASS	IDENTIFIED PROPERTY	PLANT ACCOUNT	ITEM	DESCRIPTION	QUANTITY	UNIT	PRICE	AMOUNT	FIELD COST	TOTAL FIELD COST	NONCONTRACT COST	CONSTRUCTION COST
06				LATERALS						85,900,000	24,100,000	110,000,000
	01			IRRIGATION SYSTEMS - This feature consists of 42.00 miles of HDPE						85,900,000	24,100,000	110,000,000
				pipe and 34.00 miles of aluminum pipe.								
		100		Land and Rights - This pipe system is constructed on the Northerly					0			
				Reuse Area. ROW costs are included in the reuse area.								
		152		Waterways					82,000,000			
			1	Excavation	1,235,000	cy	4.50	5,557,500				
			2	Backfill	1,200,000	cy	3.00	3,600,000				
			3	Compacting backfill	778,000	cy	8.50	6,613,000				
			4	Select fill (bedding)	15,500	cy	55.00	852,500				
			5	Excavation - Trench box	90,000	cy	15.00	1,350,000				
			6	Backfill - Trench box	80,000	cy	7.00	560,000				
			7	Compacting backfill - Trench box	195,000	cy	20.00	3,900,000				
			8	Select fill (bedding) - Trench box	3,800	cy	60.00	228,000				
			9	Unwatering	1	ls	3,300,000.00	3,300,000				
				Furnish and Lay the following HDPE Pipe								
			10	18 inch DR 26	23,760	lf	55.00	1,306,800				
			11	20 inch DR 26	63,360	lf	65.00	4,118,400				
			12	22 inch DR 26	47,520	lf	75.00	3,564,000				
			13	24 inch DR 26	7,920	lf	90.00	712,800				
			14	28 inch DR 26	15,840	lf	115.00	1,821,600				
			15	30 inch DR 26	7,920	lf	130.00	1,029,600				
			16	36 inch DR 26	55,440	lf	180.00	9,979,200				
			17	18 inch check valve (25psi)	12	ea	25,000.00	300,000				
			18	20 inch check valve (25psi)	32	ea	30,000.00	960,000				

CONSTRUCTION COST ESTIMATE

PROJECT: Central Valley Project	PREPARED BY: Regional Office, Sacramento, CA
DIVISION: West San Joaquin Division	ESTIMATE DATE: July 2007 (Rvised after DEC)
UNIT: San Luis Unit -- Drainage System -- Northerly Area	ESTIMATE TYPE: Feasibility
FEATURE: Drainage Feature Re-Evaluation Feasibility Study	PRICE LEVEL: April 2006

PROPERTY CLASS	IDENTIFIED PROPERTY	PLANT ACCOUNT	ITEM	DESCRIPTION	QUANTITY	UNIT	PRICE	AMOUNT	FIELD COST	TOTAL FIELD COST	NONCONTRACT COST	CONSTRUCTION COST
06	01			IRRIGATION SYSTEMS (continued)								
		152		Waterways (continued)								
			19	22 inch check valve (25psi)	24	ea	32,000.00	768,000				
			20	24 inch check valve (25psi)	2	ea	36,000.00	72,000				
			21	28 inch check valve (25psi)	4	ea	50,000.00	200,000				
			22	30 inch check valve (25psi)	2	ea	60,000.00	120,000				
			23	36 inch check valve (25psi)	1	ea	100,000.00	100,000				
				Furnish and Lay the following aluminum gated irrigation pipe								
			24	8" gated aluminum irrigation pipe (recess gates)	31,680	ft	24.00	760,320				
			25	10" gated aluminum irrigation pipe (recess gates)	147,840	ft	25.00	3,696,000				
			26	8 inch aluminum end cap	48	ea	90.00	4,320				
			27	10 inch aluminum end cap	224	ea	105.00	23,520				
			28	Gated irrigation pipe "socks" or "flow softeners"	59,840	ea	30.00	1,795,200				
			29	8" dia vertical pipe connections (assume DR26)	72	ft	23.00	1,656				
			30	10" dia vertical pipe connections (assume DR26)	336	ft	30.00	10,080				
			31	Mobilization (+/- 5%)				2,424,670				
			32	Unlisted Items (+/- 15%)				9,270,834				
				Subtotal				69,000,000				
				Contingencies (+/- 20%)				13,000,000				
				Field Cost - Waterways				82,000,000				

CONSTRUCTION COST ESTIMATE

PROJECT: Central Valley Project	PREPARED BY: Regional Office, Sacramento, CA
DIVISION: West San Joaquin Division	ESTIMATE DATE: July 2007 (Rvised after DEC)
UNIT: San Luis Unit -- Drainage System -- Northerly Area	ESTIMATE TYPE: Feasibility
FEATURE: Drainage Feature Re-Evaluation Feasibility Study	PRICE LEVEL: April 2006

PROPERTY CLASS	IDENTIFIED PROPERTY	PLANT ACCOUNT	ITEM	DESCRIPTION	QUANTITY	UNIT	PRICE	AMOUNT	FIELD COST	TOTAL FIELD COST	NONCONTRACT COST	CONSTRUCTION COST
06	01			IRRIGATION SYSTEMS (continued)								
		153		Waterway Structures					3,900,000			
			1	Pipe Crossings, Roads: Pipe Dia 36" and less	34	ls	80,000.00	2,720,000				
			2	Mobilization (+/- 5%)				136,000				
			3	Unlisted Items (+/- 15%)				444,000				
				Subtotal				3,300,000				
				Contingencies (+/- 20%)				600,000				
				Field Cost - Waterway Structures				3,900,000				
				FACILITATING SERVICES (2%)								
				INVESTIGATIONS (3%)								
				DESIGNS & SPECIFICATIONS (10%)								
				CONSTRUCTION SUPERVISION (12%)								
				OTHER COSTS (+/- 27%)							24,100,000	

CONSTRUCTION COST ESTIMATE

PROJECT: Central Valley Project	PREPARED BY: Regional Office, Sacramento, CA
DIVISION: West San Joaquin Division	ESTIMATE DATE: July 2007 (Rvised after DEC)
UNIT: San Luis Unit -- Drainage System -- Northerly Area	ESTIMATE TYPE: Feasibility
FEATURE: Drainage Feature Re-Evaluation Feasibility Study	PRICE LEVEL: April 2006

PROPERTY CLASS	IDENTIFIED PROPERTY	PLANT ACCOUNT	ITEM	DESCRIPTION	QUANTITY	UNIT	PRICE	AMOUNT	FIELD COST	TOTAL FIELD COST	NONCONTRACT COST	CONSTRUCTION COST
07				DRAINS						27,845,000	7,755,000	35,600,000
	01			COLLECTION SYSTEM - Serving Northerly Reuse Areas, Overall						6,670,000	1,830,000	8,500,000
				pipe length of 16.51 miles. Diameter range 4" to 18", HDPE pipe.								
		100		Land and Rights					370,000			
			1	Permanent Easements	40	Ac	2,100.00	84,000				
			2	Temporary Easements	150	Ac	1,470.00	220,500				
			2	Unlisted Items (+/- 5%)				15,500				
				Subtotal				320,000				
				Contingencies (+/- 15%)				50,000				
				Field Cost - Land and Rights				370,000				
		152		Waterways					5,600,000			
			1	Excavation	225,000	cy	4.50	1,012,500				
			2	Backfill	225,000	cy	3.00	675,000				
			3	Compacting backfill	21,500	cy	8.50	182,750				
			4	Select fill (bedding)	760	cy	55.00	41,800				
			5	Unwatering	1	ls	550,000.00	550,000				
				Furnish and Lay the following HDPE Pipe								
			6	4 inch DR26	26,400	lf	8.50	224,400				
			7	5 inch DR26	13,200	lf	10.00	132,000				
			8	6 inch DR32.5	10,600	lf	11.00	116,600				
			9	7 inch DR32.5	5,280	lf	12.00	63,360				
			10	8 inch DR32.5	13,200	lf	14.50	191,400				
			11	10 inch DR32.5	5,280	lf	19.00	100,320				
			12	12 inch DR32.5	2,640	lf	29.00	76,560				
			13	16 inch DR32.5	5,280	lf	40.00	211,200				
			14	18 inch DR32.5	5,280	lf	50.00	264,000				
			15	Mobilization (+/- 5%)				192,095				

CONSTRUCTION COST ESTIMATE

PROJECT: Central Valley Project	PREPARED BY: Regional Office, Sacramento, CA
DIVISION: West San Joaquin Division	ESTIMATE DATE: July 2007 (Rvised after DEC)
UNIT: San Luis Unit -- Drainage System -- Northerly Area	ESTIMATE TYPE: Feasibility
FEATURE: Drainage Feature Re-Evaluation Feasibility Study	PRICE LEVEL: April 2006

PROPERTY CLASS	IDENTIFIED PROPERTY	PLANT ACCOUNT	ITEM	DESCRIPTION	QUANTITY	UNIT	PRICE	AMOUNT	FIELD COST	TOTAL FIELD COST	NONCONTRACT COST	CONSTRUCTION COST
07	01			COLLECTION SYSTEM (continued)								
		152		Waterways (continued)								
			16	Unlisted Items (+/- 15%)				566,016				
				Subtotal				4,600,000				
				Contingencies (+/- 20%)				1,000,000				
				Field Cost - Waterways				5,600,000				
		153		Waterway Structures					700,000			
			1	Pipe Crossings, Roads: Pipe Dia 24" and less	8	ls	60,000.00	480,000				
			2	Mobilization (+/- 5%)				24,000				
			3	Unlisted Items (+/- 15%)				76,000				
				Subtotal				580,000				
				Contingencies (+/- 20%)				120,000				
				Field Cost - Waterway Structures				700,000				
				FACILITATING SERVICES (2%)								
				INVESTIGATIONS (3%)								
				DESIGNS & SPECIFICATIONS (10%)								
				CONSTRUCTION SUPERVISION (12%)								
				OTHER COSTS (+/- 27%)							1,830,000	

CONSTRUCTION COST ESTIMATE

PROJECT: Central Valley Project	PREPARED BY: Regional Office, Sacramento, CA
DIVISION: West San Joaquin Division	ESTIMATE DATE: July 2007 (Rvised after DEC)
UNIT: San Luis Unit -- Drainage System -- Northerly Area	ESTIMATE TYPE: Feasibility
FEATURE: Drainage Feature Re-Evaluation Feasibility Study	PRICE LEVEL: April 2006

PROPERTY CLASS	IDENTIFIED PROPERTY	PLANT ACCOUNT	ITEM	DESCRIPTION	QUANTITY	UNIT	PRICE	AMOUNT	FIELD COST	TOTAL FIELD COST	NONCONTRACT COST	CONSTRUCTION COST
07	02			CONVEYANCE SYSTEM - Serves Northerly Reuse Areas.						14,000,000	4,000,000	18,000,000
				Overall pipe length 8.64 miles, diameter range 14" to 36", HDPE pipe.								
		100		Land and Rights - This pipe system is constructed on the Northerly					0			
				Reuse Area. ROW costs are included in the reuse area.								
		152		Waterways					12,500,000			
			1	Excavation	265,000	cy	4.50	1,192,500				
			2	Backfill	255,000	cy	3.00	765,000				
			3	Compacting backfill	44,700	cy	8.50	379,950				
			4	Select fill (bedding)	3,300	cy	55.00	181,500				
			5	Excavation - Trench box	19,000	cy	15.00	285,000				
			6	Backfill - Trench box	17,000	cy	7.00	119,000				
			7	Compacting backfill - Trench box	11,200	cy	20.00	224,000				
			8	Select fill (bedding) - Trench box	820	cy	60.00	49,200				
			9	Unwatering	1	ls	700,000.00	700,000				
				Furnish and Lay the following HDPE Pipe								
			10	14 inch DR 26	387	lf	37.00	14,319				
			11	20 inch DR 26	5,264	lf	65.00	342,160				
			12	22 inch DR 26	14,546	lf	75.00	1,090,950				
			13	24 inch DR 26	6,128	lf	90.00	551,520				
			14	30 inch DR 26	7,360	lf	130.00	956,800				
			15	32 inch DR 26	6,114	lf	145.00	886,530				
			16	36 inch DR 26	5,804	lf	180.00	1,044,720				
			17	Mobilization (+/- 5%)				439,157				

CONSTRUCTION COST ESTIMATE

PROJECT: Central Valley Project	PREPARED BY: Regional Office, Sacramento, CA
DIVISION: West San Joaquin Division	ESTIMATE DATE: July 2007 (Rvised after DEC)
UNIT: San Luis Unit -- Drainage System -- Northerly Area	ESTIMATE TYPE: Feasibility
FEATURE: Drainage Feature Re-Evaluation Feasibility Study	PRICE LEVEL: April 2006

PROPERTY CLASS	IDENTIFIED PROPERTY	PLANT ACCOUNT	ITEM	DESCRIPTION	QUANTITY	UNIT	PRICE	AMOUNT	FIELD COST	TOTAL FIELD COST	NONCONTRACT COST	CONSTRUCTION COST
07	02			CONVEYANCE SYSTEM (continued)								
		152		Waterways (continued)								
			18	Unlisted Items (+/- 15%)				1,277,694				
				Subtotal				10,500,000				
				Contingencies (+/- 20%)				2,000,000				
				Field Cost - Waterways				12,500,000				
		153		Waterway Structures					1,500,000			
			1	Pipe Crossings, Roads: Pipe Dia 36" and less	13	ls	80,000.00	1,040,000				
			2	Mobilization (+/- 5%)				52,000				
			3	Unlisted Items (+/- 15%)				158,000				
				Subtotal				1,250,000				
				Contingencies (+/- 20%)				250,000				
				Field Cost - Waterway Structures				1,500,000				
				FACILITATING SERVICES (2%)								
				INVESTIGATIONS (3%)								
				DESIGNS & SPECIFICATIONS (10%)								
				CONSTRUCTION SUPERVISION (12%)								
				OTHER COSTS (+/- 27%)							4,000,000	

CONSTRUCTION COST ESTIMATE

PROJECT: Central Valley Project	PREPARED BY: Regional Office, Sacramento, CA
DIVISION: West San Joaquin Division	ESTIMATE DATE: July 2007 (Rvised after DEC)
UNIT: San Luis Unit -- Drainage System -- Northerly Area	ESTIMATE TYPE: Feasibility
FEATURE: Drainage Feature Re-Evaluation Feasibility Study	PRICE LEVEL: April 2006

PROPERTY CLASS	IDENTIFIED PROPERTY	PLANT ACCOUNT	ITEM	DESCRIPTION	QUANTITY	UNIT	PRICE	AMOUNT	FIELD COST	TOTAL FIELD COST	NONCONTRACT COST	CONSTRUCTION COST
07	03			DELTA - MENDOTA CANAL DRAINAGE PIPELINE						7,175,000	1,925,000	9,100,000
				Overall pipe length 10.80 miles, diameter range 10" to 18", HDPE pipe.								
		100		Land and Rights - This pipe system is constructed on the ROW of the					0			
				Delta Mendota Canal (an existing federal facility) and the Northerly								
				Reuse Area. ROW costs are included with other features.								
		152		Waterways					7,000,000			
			1	Excavation	200,000	cy	4.50	900,000				
			2	Backfill	200,000	cy	3.00	600,000				
			3	Compacting backfill	1,300	cy	8.50	11,050				
			4	Select fill (bedding)	130	cy	55.00	7,150				
			5	Excavation - Trench box	10,000	cy	15.00	150,000				
			6	Backfill - Trench box	9,600	cy	7.00	67,200				
			7	Compacting backfill - Trench box	24,700	cy	20.00	494,000				
			8	Select fill (bedding) - Trench box	2,500	cy	60.00	150,000				
			9	Unwatering	1	ls	500,000.00	500,000				
				Furnish and Lay the following HDPE Pipe								
			10	10 inch DR32.5	5,800	lf	19.00	110,200				
			11	12 inch DR32.5	28,000	lf	29.00	812,000				
			12	14 inch DR32.5	8,700	lf	33.00	287,100				
			13	18 inch DR32.5	14,500	lf	50.00	725,000				
			14	Mobilization (+/- 5%)				240,685				
			15	Unlisted Items (+/- 15%)				745,615				
				Subtotal				5,800,000				
				Contingencies (+/- 20%)				1,200,000				
				Field Cost - Waterways				7,000,000				

CONSTRUCTION COST ESTIMATE

PROJECT: Central Valley Project	PREPARED BY: Regional Office, Sacramento, CA
DIVISION: West San Joaquin Division	ESTIMATE DATE: July 2007 (Rvised after DEC)
UNIT: San Luis Unit -- Drainage System -- Northerly Area	ESTIMATE TYPE: Feasibility
FEATURE: Drainage Feature Re-Evaluation Feasibility Study	PRICE LEVEL: April 2006

PROPERTY CLASS	IDENTIFIED PROPERTY	PLANT ACCOUNT	ITEM	DESCRIPTION	QUANTITY	UNIT	PRICE	AMOUNT	FIELD COST	TOTAL FIELD COST	NONCONTRACT COST	CONSTRUCTION COST
07	03			DELTA - MENDOTA CANAL DRAINAGE PIPELINE (continued)								
		153		Waterway Structures					175,000			
			1	Pipe Crossings, Roads: Pipe Dia 24" and less	2	ls	60,000.00	120,000				
			2	Mobilization (+/- 5%)				6,000				
			3	Unlisted Items (+/- 15%)				19,000				
				Subtotal				145,000				
				Contingencies (+/- 20%)				30,000				
				Field Cost - Waterway Structures				175,000				
				FACILITATING SERVICES (2%)								
				INVESTIGATIONS (3%)								
				DESIGNS & SPECIFICATIONS (10%)								
				CONSTRUCTION SUPERVISION (12%)								
				OTHER COSTS (+/- 27%)							1,925,000	

CONSTRUCTION COST ESTIMATE

PROJECT: Central Valley Project	PREPARED BY: Regional Office, Sacramento, CA
DIVISION: West San Joaquin Division	ESTIMATE DATE: July 2007 (Rvised after DEC)
UNIT: San Luis Unit -- Drainage System -- Northerly Area	ESTIMATE TYPE: Feasibility
FEATURE: Drainage Feature Re-Evaluation Feasibility Study	PRICE LEVEL: April 2006

PROPERTY CLASS	IDENTIFIED PROPERTY	PLANT ACCOUNT	ITEM	DESCRIPTION	QUANTITY	UNIT	PRICE	AMOUNT	FIELD COST	TOTAL FIELD COST	NONCONTRACT COST	CONSTRUCTION COST
12				SPECIAL PLANTS						591,247,000	161,253,000	752,500,000
	01			NORTHERLY AREA - REUSE AREAS - The reuse area has a total						81,700,000	23,300,000	105,000,000
				area of 8,388 acres. Currently, 3,803 acres are in operation as a reuse								
				area that is owned by a water district. The remaining 4,585 acres needs								
				to be purchased and configured as a reuse area. As a project feature								
				all 8,388 acres must be purchased. Conveyance pipelines distribute								
				drain water over the reuse area and on-farm drain pipes collect drain								
				water for delivery to the reuse area pumping plants.								
		100		Land and Rights					41,000,000			
			1	Seasonal Crop Land -- Fee	8,388	Ac	4,000.00	33,552,000				
			2	Unlisted Items (+/- 5%)				1,448,000				
				Subtotal				35,000,000				
				Contingencies (+/- 15%)				6,000,000				
				Field Cost - Land and Rights				41,000,000				
		152		Waterways					40,700,000			
				(1) Land Development					14,500,000			
			1	Land Smoothing and Re- Leveling	4,585	Ac	500.00	2,292,500				
			2	Establish Initial Forage Crops; Seeding and Drilling	4,585	Ac	1,000.00	4,585,000				
			3	Surface Drainage Ditch at field ends; (cutting a "v" notch with a blade)	405,680	lf	2.00	811,360				
			4	Install Groundwater wells for supplemental water supply	8	ea	300,000.00	2,400,000				
			5	Mobilization (+/- 5%)				504,443				
			6	Unlisted Items (+/- 15%)				1,406,697				
				Subtotal				12,000,000				
				Contingencies (+/- 20%)				2,500,000				
				Field Cost - (1) Land Development				14,500,000				

CONSTRUCTION COST ESTIMATE

PROJECT: Central Valley Project	PREPARED BY: Regional Office, Sacramento, CA
DIVISION: West San Joaquin Division	ESTIMATE DATE: July 2007 (Rvised after DEC)
UNIT: San Luis Unit -- Drainage System -- Northerly Area	ESTIMATE TYPE: Feasibility
FEATURE: Drainage Feature Re-Evaluation Feasibility Study	PRICE LEVEL: April 2006

PROPERTY CLASS	IDENTIFIED PROPERTY	PLANT ACCOUNT	ITEM	DESCRIPTION	QUANTITY	UNIT	PRICE	AMOUNT	FIELD COST	TOTAL FIELD COST	NONCONTRACT COST	CONSTRUCTION COST
12	01			NORTHERLY AREA - REUSE AREAS (continued)								
		152		Waterways (continued)								
				(2) RO Backwash Cells					1,200,000			
			1	Land Smoothing and Re- Leveling	80	Ac	$500.00	40,000				
			2	Establish Initial Forage Crops; Seeding and Drilling	80	Ac	$1,000.00	80,000				
			3	8 ft wide Cell Berms; compacted fill	10,800	cy	$10.00	108,000				
			4	4 ft wide Cell Berms; compacted fill	2,250	cy	$10.00	22,500				
			5	Gravel Surfacing on 8 ft Cell Berms	150	cy	$65.00	9,750				
			6	Tailwater Capture Ditch; Excavation	2,200	cy	$4.50	9,900				
			7	12"x20 ft CMP Inlet to each cell	8	ea	$1,000.00	8,000				
			8	12" Waterman style Aluminum Slide Gate	8	ea	$3,000.00	24,000				
				Earthwork to Install CMP Inlets (assume similar to structural)								
			9	Excavation (vert. 70 cy)	260	cy	$15.00	3,900				
			10	Backfill (vert. 50 cy)	240	cy	$10.00	2,400				
			11	Compacting Backfill (85% proctor) (vert. 7 cy)	20	cy	$10.00	200				
			12	Select Fill; bedding (vert. 5 cy)	6	cy	$75.00	450				
			13	Spaced Drains; 6" dia at average 6 ft depth; with gravel envelope	34,200	lf	$5.00	171,000				
			14	Concrete Manholes, 48"x 9 ft	36	ea	$9,000.00	324,000				
			15	Collector Drain, 6" dia at 6 ft depth; with gravel envelope	200	lf	$5.00	1,000				
			16	Collector Drain, 8" dia at 6 ft depth; with gravel envelope	300	lf	$6.00	1,800				
			17	Collector Drain, 10" dia at 7 ft depth; with gravel envelope	500	lf	$9.50	4,750				
			18	Collector Drain, 12" dia at 7 ft depth; with gravel envelope	5,220	lf	$10.50	54,810				
			19	Mobilization (+/- 5%)				41,323				
			20	Unlisted Items (+/- 15%)				132,217				
				Subtotal				1,000,000				
				Contingencies (+/- 20%)				200,000				
				Field Cost - (2) RO Backwash Cells				1,200,000				

CONSTRUCTION COST ESTIMATE

PROJECT: Central Valley Project	PREPARED BY: Regional Office, Sacramento, CA
DIVISION: West San Joaquin Division	ESTIMATE DATE: July 2007 (Rvised after DEC)
UNIT: San Luis Unit -- Drainage System -- Northerly Area	ESTIMATE TYPE: Feasibility
FEATURE: Drainage Feature Re-Evaluation Feasibility Study	PRICE LEVEL: April 2006

PROPERTY CLASS	IDENTIFIED PROPERTY	PLANT ACCOUNT	ITEM	DESCRIPTION	QUANTITY	UNIT	PRICE	AMOUNT	FIELD COST	TOTAL FIELD COST	NONCONTRACT COST	CONSTRUCTION COST
12	01			NORTHERLY AREA - REUSE AREAS (continued)								
		152		Waterways (continued)								
				(3) Reuse Area Tile Drains					25,000,000			
				Spaced Drains								
			1	6-inch dia. Perforated tile drains w/gravel envelope	511,920	lf	$5.00	2,559,600				
			2	8-inch dia. Perforated tile drains w/gravel envelope	318,610	lf	$6.00	1,911,660				
			3	10-inch dia. Perforated tile drains w/gravel envelope	103,790	lf	$9.50	986,005				
			4	12-inch dia. Perforated tile drains w/gravel envelope	49,470	lf	$10.50	519,435				
				Collector Drains								
			5	8-inch dia. Perforated tile drains w/gravel envelope	2,800	lf	$6.00	16,800				
			6	10-inch dia. Perforated tile drains w/gravel envelope	2,400	lf	$9.50	22,800				
			7	12-inch dia. Perforated tile drains w/gravel envelope	2,900	lf	$10.50	30,450				
			8	15-inch dia. Perforated tile drains w/gravel envelope	6,400	lf	$14.50	92,800				
			9	18-inch dia. Perforated tile drains w/gravel envelope	9,400	lf	$30.00	282,000				
			10	21-inch dia. Perforated tile drains w/gravel envelope	9,500	lf	$35.00	332,500				
			11	24-inch dia. Perforated tile drains w/gravel envelope	7,200	lf	$40.00	288,000				
			12	27-inch dia. Perforated tile drains w/gravel envelope	4,000	lf	$50.00	200,000				
			13	30-inch dia. Perforated tile drains w/gravel envelope	2,100	lf	$50.00	105,000				
			14	36-inch dia. Perforated tile drains w/gravel envelope	4,300	lf	$55.00	236,500				

CONSTRUCTION COST ESTIMATE

PROJECT: Central Valley Project	PREPARED BY: Regional Office, Sacramento, CA
DIVISION: West San Joaquin Division	ESTIMATE DATE: July 2007 (Rvised after DEC)
UNIT: San Luis Unit -- Drainage System -- Northerly Area	ESTIMATE TYPE: Feasibility
FEATURE: Drainage Feature Re-Evaluation Feasibility Study	PRICE LEVEL: April 2006

PROPERTY CLASS	IDENTIFIED PROPERTY	PLANT ACCOUNT	ITEM	DESCRIPTION	QUANTITY	UNIT	PRICE	AMOUNT	FIELD COST	TOTAL FIELD COST	NONCONTRACT COST	CONSTRUCTION COST
12	01			NORTHERLY AREA - REUSE AREAS (continued)								
		152		Waterways (continued)								
				(3) Reuse Area Tile Drains (continued)								
			15	48-inch x 10 ft. concrete manholes;	790	ea	$10,000.00	7,900,000				
			16	DOS-IR Water Level Control Valves (assumed 10'x8" PVC)	362	ea	$1,400.00	506,800				
			17	Finish Grading and Shaping ROW (width of 100 ft)	2,375	Ac	$500.00	1,187,500				
			18	Mobilization (+/- 5%)				858,893				
			19	Unlisted Items (+/- 15%)				2,963,258				
				Subtotal				21,000,000				
				Contingencies (+/- 20%)				4,000,000				
				Field Cost - (3) Reuse Area Tile Drains				25,000,000				
				Field Cost - Waterways				40,700,000				
				FACILITATING SERVICES (2%)								
				INVESTIGATIONS (3%)								
				DESIGNS & SPECIFICATIONS (10%)								
				CONSTRUCTION SUPERVISION (12%)								
				OTHER COSTS (+/- 27%)							23,300,000	

CONSTRUCTION COST ESTIMATE

PROJECT: Central Valley Project	PREPARED BY: Regional Office, Sacramento, CA
DIVISION: West San Joaquin Division	ESTIMATE DATE: July 2007 (Rvised after DEC)
UNIT: San Luis Unit -- Drainage System -- Northerly Area	ESTIMATE TYPE: Feasibility
FEATURE: Drainage Feature Re-Evaluation Feasibility Study	PRICE LEVEL: April 2006

PROPERTY CLASS	IDENTIFIED PROPERTY	PLANT ACCOUNT	ITEM	DESCRIPTION	QUANTITY	UNIT	PRICE	AMOUNT	FIELD COST	TOTAL FIELD COST	NONCONTRACT COST	CONSTRUCTION COST
12	02			RO TREATMENT PLANT - This treatment plant handles the water from the Northerly Areas. Several processes are utilized.						34,390,000	9,610,000	44,000,000
		100		Land and Rights					20,000			
			1	Seasonal Crop Land - Fee	4	Ac	4,000.00	16,000				
			2	Unlisted Items (+/- 5%)				1,000				
				Subtotal				17,000				
				Contingencies (+/- 15%)				3,000				
				Field Cost - Land and Rights				20,000				
		130		Structures and Improvements					17,500,000			
			1	Concrete Pad for Pretreatment System	407	cy	$1,350.00	549,450				
			2	Site Work	1	ls	547,800.00	547,800				
			3	Additional Site Work	1	ls	41,200.00	41,200				
			4	Building	18,560	sf	250.00	4,640,000				
			5	Rapid Mix Tank	1	ls	39,570.00	39,570				
			6	Flocculation	1	ls	351,000.00	351,000				
			7	Additional Flocculation Cost to Meet Wet Year Capacity	1	ls	11,400.00	11,400				
			8	Filters	1	ls	3,369,700.00	3,369,700				
			9	Location Factor for Fresno, CA (+/- 7.1% of items 2-8)				639,048				
			10	Mobilization (+/- 5%)				509,458				
			11	Unlisted Items (+/- 15%)				1,604,794				
			12	Allowance for Procurement Strategy (+/- 5%)				696,580				
				Subtotal				13,000,000				
				Contingencies (+/- 35%)				4,500,000				
				Field Cost - Structures and Improvements				17,500,000				

CONSTRUCTION COST ESTIMATE

PROJECT: Central Valley Project	PREPARED BY: Regional Office, Sacramento, CA
DIVISION: West San Joaquin Division	ESTIMATE DATE: July 2007 (Rvised after DEC)
UNIT: San Luis Unit -- Drainage System -- Northerly Area	ESTIMATE TYPE: Feasibility
FEATURE: Drainage Feature Re-Evaluation Feasibility Study	PRICE LEVEL: April 2006

PROPERTY CLASS	IDENTIFIED PROPERTY	PLANT ACCOUNT	ITEM	DESCRIPTION	QUANTITY	UNIT	PRICE	AMOUNT	FIELD COST	TOTAL FIELD COST	NONCONTRACT COST	CONSTRUCTION COST
12	02			RO TREATMENT PLANT (continued)								
		152		Waterways					11,500,000			
			1	Ferric Chloride Injection	1	ls	279,100.00	279,100				
			2	Polymer Injection	1	ls	60,000.00	60,000				
			3	Sedimentation	1	ls	407,100.00	407,100				
			4	Antiscalant Feed System	1	ls	86,400.00	86,400				
			5	Membrane Elements	1,848	ea	750.00	1,386,000				
			6	Membrane Vessels/Trains	1	ls	2,038,100.00	2,038,100				
			7	Additional Train to Meet Wet Year Cost	1	ls	99,300.00	99,300				
			8	Cartridge Filters	1	ls	182,300.00	182,300				
			9	Additional Cartridge Filters	1	ls	11,700.00	11,700				
			10	Membrane Cleaning Equipment	1	ls	94,500.00	94,500				
			11	Contractor Engineering & Training	1	ls	125,800.00	125,800				
			12	Process Piping	1	ls	1,011,800.00	1,011,800				
			13	Yard Piping	1	ls	461,100.00	461,100				
			14	Location Factor for Fresno, CA (+/- 7.1% of above)				443,267				
			15	Mobilization (+/- 5%)				334,323				
			16	Unlisted Items (+/- 15%)				1,053,119				
			17	Allowance for Procurement Strategy (+/- 5%)				426,091				
				Subtotal				8,500,000				
				Contingencies (+/- 35%)				3,000,000				
				Field Cost - Waterways				11,500,000				
		160		Pumps and Prime Movers					2,500,000			
			1	Forwarding & High Pressure Pumps	1	ls	1,164,500.00	1,164,500				
			2	Additional Pump Cost to Meet Wet Year Capacity	1	ls	57,800.00	57,800				
			3	Product water pumps	3	ea	14,300.00	42,900				
			4	Sump for product water pumps	1	ls	105,600.00	105,600				
			5	Location Factor for Fresno, CA (+/- 7.1% of above)				97,327				

CONSTRUCTION COST ESTIMATE

PROJECT: Central Valley Project	PREPARED BY: Regional Office, Sacramento, CA
DIVISION: West San Joaquin Division	ESTIMATE DATE: July 2007 (Rvised after DEC)
UNIT: San Luis Unit -- Drainage System -- Northerly Area	ESTIMATE TYPE: Feasibility
FEATURE: Drainage Feature Re-Evaluation Feasibility Study	PRICE LEVEL: April 2006

PROPERTY CLASS	IDENTIFIED PROPERTY	PLANT ACCOUNT	ITEM	DESCRIPTION	QUANTITY	UNIT	PRICE	AMOUNT	FIELD COST	TOTAL FIELD COST	NONCONTRACT COST	CONSTRUCTION COST
12	02			RO TREATMENT PLANT (continued)								
		160		Pumps and Prime Movers (continued)								
			6	Mobilization (+/- 5%)				73,406				
			7	Unlisted Items (+/- 15%)				231,230				
			8	Allowance for Procurement Strategy (+/- 5%)				77,237				
				Subtotal				1,850,000				
				Contingencies (+/- 35%)				650,000				
				Field Cost - Pumps and Prime Movers				2,500,000				
		170		Accessory Electrical Equipment					2,200,000			
			1	Electrical Cost	1	ls	1,119,500.00	1,119,500				
			2	Additional Cost to Meet Wet Year Capacity	1	ls	54,100.00	54,100				
			3	Location Factor for Fresno, CA (+/- 7.1% of above)				83,326				
			4	Mobilization (+/- 5%)				62,846				
			5	Unlisted Items (+/- 15%)				197,966				
			6	Allowance for Procurement Strategy (+/- 5%)				82,262				
				Subtotal				1,600,000				
				Contingencies (+/- 35%)				600,000				
				Field Cost - Accessory Electrical Equipment				2,200,000				

CONSTRUCTION COST ESTIMATE

PROJECT: Central Valley Project	PREPARED BY: Regional Office, Sacramento, CA
DIVISION: West San Joaquin Division	ESTIMATE DATE: July 2007 (Rvised after DEC)
UNIT: San Luis Unit -- Drainage System -- Northerly Area	ESTIMATE TYPE: Feasibility
FEATURE: Drainage Feature Re-Evaluation Feasibility Study	PRICE LEVEL: April 2006

PROPERTY CLASS	IDENTIFIED PROPERTY	PLANT ACCOUNT	ITEM	DESCRIPTION	QUANTITY	UNIT	PRICE	AMOUNT	FIELD COST	TOTAL FIELD COST	NONCONTRACT COST	CONSTRUCTION COST
12	02			RO TREATMENT PLANT (continued)								
		180		Installed Supervisory Control System					670,000			
			1	Instrumentation and Controls	1	ls	366,600.00	366,600				
			2	Location Factor for Fresno, CA (+/- 7% of above)				26,029				
			3	Mobilization (+/- 5%)				19,631				
			4	Unlisted Items (+/- 15%)				61,839				
			5	Allowance for Procurement Strategy (+/- 5%)				25,901				
				Subtotal				500,000				
				Contingencies (+/- 35%)				170,000				
				Field Cost - Installed Supervisory Control System				670,000				
				FACILITATING SERVICES (2%)								
				INVESTIGATIONS (3%)								
				DESIGNS & SPECIFICATIONS (10%)								
				CONSTRUCTION SUPERVISION (12%)								
				OTHER COSTS (+/- 27%)							9,610,000	

CONSTRUCTION COST ESTIMATE

PROJECT: Central Valley Project	PREPARED BY: Regional Office, Sacramento, CA
DIVISION: West San Joaquin Division	ESTIMATE DATE: July 2007 (Rvised after DEC)
UNIT: San Luis Unit -- Drainage System -- Northerly Area	ESTIMATE TYPE: Feasibility
FEATURE: Drainage Feature Re-Evaluation Feasibility Study	PRICE LEVEL: April 2006

PROPERTY CLASS	IDENTIFIED PROPERTY	PLANT ACCOUNT	ITEM	DESCRIPTION	QUANTITY	UNIT	PRICE	AMOUNT	FIELD COST	TOTAL FIELD COST	NONCONTRACT COST	CONSTRUCTION COST
12	03			NORTHERLY AREA Se BIOTREATMENT PLANT - The system is						103,535,000	26,465,000	130,000,000
				designed to handle 5,000 gpm. It serves the Northerly Areas.								
		100		Land and Rights					15,000			
			1	Seasonal Crop Land - Fee	3	Ac	4,000.00	12,000				
			2	Unlisted Items (+/- 5%)				1,000				
				Subtotal				13,000				
				Contingencies (+/- 15%)				2,000				
				Field Cost - Land and Rights				15,000				
		130		Structures and Improvements					51,070,000			
				(1) General Site Work					1,650,000			
			1	Paving	1,530	sy	60.00	91,800				
			2	Seeding	39,000	sy	2.00	78,000				
			3	Sod	4	msf	2,400.00	9,600				
				Security								
			4	Perimeter Fence, 8' Chain Link	1,520	lf	40.00	60,800				
			5	Double Swing Gate, 8'x20'	2	ea	9,000.00	18,000				
			6	Camera and Monitor	1	ea	8,500.00	8,500				
			7	Additional Cameras	5	ea	5,000.00	25,000				
			8	Auto Light Features on Cameras, adder ea	6	ea	6,500.00	39,000				
			9	Yard Lighting, on dual switches (light/motion and manual) on posts	16	ea	3,500.00	56,000				
				Earthwork, main structures 3' deep in-ground								
			10	Site clearing and grubbing	5	acre	6,000.00	30,000				
			11	Excavation, all except bioreactors and piping gallery	1,345	cy	12.00	16,140				
			12	Excavation, bioreactors and piping gallery	4,800	cy	12.00	57,600				
			13	Offsite disposal of waste material	6,150	cy	35.00	215,250				
				Dewatering for Clarifier Waffle Bottom Slab, 3' Dewatering								
			14	Gas Powered Pump, 4 Months Rental and Operation	122	day	2,500.00	305,000				
			15	12 Well Points, 2" Steel Pipe driven 20 feet deep	240	lf	45.00	10,800				
			16	Suction Piping, 3" Plastic	150	lf	35.00	5,250				
			17	Discharge Piping, 4" Plastic	150	lf	60.00	9,000				

CONSTRUCTION COST ESTIMATE

PROJECT: Central Valley Project	PREPARED BY: Regional Office, Sacramento, CA
DIVISION: West San Joaquin Division	ESTIMATE DATE: July 2007 (Rvised after DEC)
UNIT: San Luis Unit -- Drainage System -- Northerly Area	ESTIMATE TYPE: Feasibility
FEATURE: Drainage Feature Re-Evaluation Feasibility Study	PRICE LEVEL: April 2006

PROPERTY CLASS	IDENTIFIED PROPERTY	PLANT ACCOUNT	ITEM	DESCRIPTION	QUANTITY	UNIT	PRICE	AMOUNT	FIELD COST	TOTAL FIELD COST	NONCONTRACT COST	CONSTRUCTION COST
12	03			NORTHERLY AREA Se BIOTREATMENT PLANT (continued)								
		130		Structures and Improvements (continued)								
				(1) General Site Work (continued)								
			18	Mobilization (+/- 5%)				51,787				
			19	Unlisted Items (+/- 15%)				163,129				
			20	Allowance for Procurement Strategy (+/- 5%)				49,344				
				Subtotal				1,300,000				
				Contingencies (+/- 25%)				350,000				
				Field Cost - (1) General Site Work				1,650,000				
				(2) Administration Building					1,250,000			
			1	Geotextile Fabric to Separate Native and Structural Fill	2,926	sf	0.50	1,463				
			2	Structural Fill Below Structures (imported material)	55	cy	60.00	3,300				
			3	Foundation	45	cy	700.00	31,500				
			4	Slab on grade	70	cy	600.00	42,000				
			5	Metal Bldg 14' eave, 40' span	2,480	sf	45.00	111,600				
			6	Roofing underlayment, allocation	30	sq	110.00	3,300				
			7	Roofing, Aluminum Standing Seam, anodized	30	sq	720.00	21,600				
			8	Overhanging roof w/ soffit	205	sf	50.00	10,250				
			9	Doors HM Single	3	ea	1,300.00	3,900				
			10	Doors HM Double	2	ea	2,500.00	5,000				
			11	Doors, coiling 10'	1	ea	2,000.00	2,000				
			12	Windows, allocation	4	ea	4,000.00	16,000				
			13	Doors, interior w/ safety glass	7	ea	450.00	3,150				
			14	Interior Walls - Gypsum 24" metal studs	810	sf	10.00	8,100				
			15	Interior Walls - 8" CMU, painted	540	sf	12.00	6,480				
			16	Suspended Ceiling, complete	2,480	sf	10.00	24,800				
			17	Ceiling GWB - Fire Rated	2,480	sf	5.00	12,400				
			18	Flooring System, allocation for high traffic carpet or tile	2,480	sf	20.00	49,600				
			19	Wall Tile, bathrooms	320	sf	40.00	12,800				
			20	API Panels	2,040	sf	20.00	40,800				
			21	Block Veneer to 4' high, precast cap, estimate	815	sf	25.00	20,375				

CONSTRUCTION COST ESTIMATE

PROJECT: Central Valley Project	PREPARED BY: Regional Office, Sacramento, CA
DIVISION: West San Joaquin Division	ESTIMATE DATE: July 2007 (Rvised after DEC)
UNIT: San Luis Unit -- Drainage System -- Northerly Area	ESTIMATE TYPE: Feasibility
FEATURE: Drainage Feature Re-Evaluation Feasibility Study	PRICE LEVEL: April 2006

PROPERTY CLASS	IDENTIFIED PROPERTY	PLANT ACCOUNT	ITEM	DESCRIPTION	QUANTITY	UNIT	PRICE	AMOUNT	FIELD COST	TOTAL FIELD COST	NONCONTRACT COST	CONSTRUCTION COST
12	03			NORTHERLY AREA Se BIOTREATMENT PLANT (continued)								
		130		Structures and Improvements (continued)								
				(2) Administration Building (continued)								
			22	Laboratory Cabinets, basework	15	lf	350.00	5,250				
			23	Laboratory Cabinets, basework	20	lf	350.00	7,000				
			24	Laboratory Countertop, acidproof	70	sf	80.00	5,600				
			25	Fumehood, Cole Parmer 48" installed	1	ls	13,000.00	13,000				
			26	Lab furniture	485	sf	100.00	48,500				
			27	Lockers, single tier	8	ea	370.00	2,960				
			28	Lab Sink	1	ea	3,100.00	3,100				
			29	Eye/face wash combo	1	ea	1,200.00	1,200				
			30	Emergency Shower	1	ea	2,500.00	2,500				
			31	Fire Alarm Control Panel - 8 zone	1	ea	4,000.00	4,000				
			32	Battery Rack	1	ea	1,500.00	1,500				
			33	Smoke Detectors	6	ea	250.00	1,500				
			34	Fire Alarm Horn	2	ea	130.00	260				
			35	Fire Extinguishers, CO2 20lb	7	ea	365.00	2,555				
			36	Fire Extinguishers, 100 lb wheeled	1	ea	365.00	365				
			37	HVAC, per sf	2,480	sf	20.00	49,600				
			38	Plumbing, per sf	2,480	sf	10.00	24,800				
			39	Electrical, per sf	2,480	sf	20.00	49,600				
			40	Electrical, additional for well pump and generator	1	ls	40,000.00	40,000				
				Ancillary Facilities To Administration Building								
			41	75 kW Propane Generator	1	ea	40,000.00	40,000				
			42	Auto-Transfer Switch (provided by generator supplier)	1	ea	10,500.00	10,500				
			43	Installation of backup power equipment)+/- 30% of above items	1	ls	15,000.00	15,000				
				New Well								
			44	Driller Mobilization	1	ea	4,000.00	4,000				
			45	8" Well Construction	200	lf	45.00	9,000				
			46	Well Pump, installed w/ valving and controls	1	ea	10,000.00	10,000				
			47	Piping, 2"	100	lf	45.00	4,500				
			48	Reverse Osmosis for Potable Water, in Admin Building	1	ea	10,000.00	10,000				
			49	Mobilization (+/- 5%)				39,835				
			50	Unlisted Items (+/- 15%)				125,482				

CONSTRUCTION COST ESTIMATE

PROJECT: Central Valley Project	PREPARED BY: Regional Office, Sacramento, CA
DIVISION: West San Joaquin Division	ESTIMATE DATE: July 2007 (Rvised after DEC)
UNIT: San Luis Unit -- Drainage System -- Northerly Area	ESTIMATE TYPE: Feasibility
FEATURE: Drainage Feature Re-Evaluation Feasibility Study	PRICE LEVEL: April 2006

PROPERTY CLASS	IDENTIFIED PROPERTY	PLANT ACCOUNT	ITEM	DESCRIPTION	QUANTITY	UNIT	PRICE	AMOUNT	FIELD COST	TOTAL FIELD COST	NONCONTRACT COST	CONSTRUCTION COST
12	03			NORTHERLY AREA Se BIOTREATMENT PLANT (continued)								
		130		Structures and Improvements (continued)								
				(2) Administration Building (continued)								
			51	Allowance for Procurement Strategy (+/- 5%)				37,975				
				Subtotal				1,000,000				
				Contingencies (+/- 25%)				250,000				
				Field Cost - (2) Administration Building				1,250,000				
				(3) Solids Dewatering Building					3,800,000			
			1	Geotextile Fabric to Separate Native and Structural Fill	4,000	sf	0.50	2,000				
			2	Structural Fill Below Structures (imported material)	75	cy	60.00	4,500				
			3	Pile Installation, 50 ton, 60 ft	660	lf	65.00	42,900				
			4	Foundation	30	cy	700.00	21,000				
			5	Slab on grade	90	cy	600.00	54,000				
			6	Metal Bldg 20' eave, 40' span	3,200	sf	50.00	160,000				
			7	Roofing underlayment, allocation	40	sq	110.00	4,400				
			8	Roofing, Aluminum Standing Seam, anodized	40	sq	720.00	28,800				
			9	Interior Walls - 8" CMU, painted	360	sf	12.00	4,320				
			10	API Panels	4,800	sf	13.00	62,400				
			11	Overhanging roof w/ soffit	180	sf	50.00	9,000				
			12	Belt Presses - Furnish to Site	2	ea	500,000.00	1,000,000				
			13	Belt Press - Install +/- 30% of Furnish	1	ls	300,000.00	300,000				
			14	Elevated Walkway	400	sf	60.00	24,000				
			15	Polymer System, installed	1	ea	30,000.00	30,000				
			16	Monorail - 3 ton, 30' span, installed	1	ea	30,000.00	30,000				
			17	Conveyors, installed	3	ea	60,000.00	180,000				
			18	HVAC, per sf	3,200	sf	20.00	64,000				
			19	Plumbing, per sf	3,200	sf	10.00	32,000				
			20	Mechanical Piping, allocation	1	ls	100,000.00	100,000				
			21	Electrical, allocation +/- 12% of above items	1	ls	250,000.00	250,000				
			22	Fire Extinguishers, CO2 20lb	3	ea	365.00	1,095				
			23	Mobilization (+/- 5%)				120,221				

CONSTRUCTION COST ESTIMATE

PROJECT: Central Valley Project	PREPARED BY: Regional Office, Sacramento, CA
DIVISION: West San Joaquin Division	ESTIMATE DATE: July 2007 (Rvised after DEC)
UNIT: San Luis Unit -- Drainage System -- Northerly Area	ESTIMATE TYPE: Feasibility
FEATURE: Drainage Feature Re-Evaluation Feasibility Study	PRICE LEVEL: April 2006

PROPERTY CLASS	IDENTIFIED PROPERTY	PLANT ACCOUNT	ITEM	DESCRIPTION	QUANTITY	UNIT	PRICE	AMOUNT	FIELD COST	TOTAL FIELD COST	NONCONTRACT COST	CONSTRUCTION COST
12	03			NORTHERLY AREA Se BIOTREATMENT PLANT (continued)								
		130		Structures and Improvements (continued)								
				(3) Solids Dewatering Building (continued)								
			24	Unlisted Items (+/- 15%)				378,695				
			25	Allowance for Procurement Strategy (+/- 5%)				96,669				
				Subtotal				3,000,000				
				Contingencies (+/- 25%)				800,000				
				Field Cost - (3) Solids Dewatering Building				3,800,000				
				(4) Mechanical Building					2,300,000			
			1	Geotextile Fabric to Separate Native and Structural Fill	3,576	sf	0.50	1,788				
			2	Structural Fill Below Structures (imported material)	65	cy	60.00	3,900				
			3	Pile Installation, 50 ton, 60 ft	900	lf	65.00	58,500				
			4	Foundation	50	cy	700.00	35,000				
			5	Formwork	225	sf	25.00	5,625				
			6	Rebar #5 12"OC/EWEF	10	ton	3,500.00	35,000				
			7	Concrete Material	175	cy	190.00	33,250				
			8	Concrete Labor	175	cy	135.00	23,625				
			9	Metal Bldg 20' eave, 50' span	3,100	sf	50.00	155,000				
			10	Roofing underlayment, allocation	35	sq	110.00	3,850				
			11	Roofing, Aluminum Standing Seam, anodized	35	sq	720.00	25,200				
			12	API Panels	4,480	sf	13.00	58,240				
			13	Overhanging roof w/ soffit	225	sf	50.00	11,250				
			14	Interior Walls - 8" CMU, painted	480	sf	12.00	5,760				
			15	Doors HM Single	3	ea	1,300.00	3,900				
			16	Doors, coiling 10'	2	ea	2,000.00	4,000				
			17	Windows, allocation	2	ea	4,000.00	8,000				
			18	Doors, interior w/ safety glass	2	ea	450.00	900				
			19	HVAC Mech Room, per sf	3,100	sf	20.00	62,000				
			20	HVAC Pipe Gallery, per sf	9,660	sf	20.00	193,200				
			21	Plumbing, per sf	3,100	sf	10.00	31,000				
			22	Electrical standard structure, per sf	3,100	sf	20.00	62,000				

CONSTRUCTION COST ESTIMATE

PROJECT: Central Valley Project	PREPARED BY: Regional Office, Sacramento, CA
DIVISION: West San Joaquin Division	ESTIMATE DATE: July 2007 (Rvised after DEC)
UNIT: San Luis Unit -- Drainage System -- Northerly Area	ESTIMATE TYPE: Feasibility
FEATURE: Drainage Feature Re-Evaluation Feasibility Study	PRICE LEVEL: April 2006

PROPERTY CLASS	IDENTIFIED PROPERTY	PLANT ACCOUNT	ITEM	DESCRIPTION	QUANTITY	UNIT	PRICE	AMOUNT	FIELD COST	TOTAL FIELD COST	NONCONTRACT COST	CONSTRUCTION COST
12	03			NORTHERLY AREA Se BIOTREATMENT PLANT (continued)								
		130		Structures and Improvements (continued)								
				(4) Mechanical Building (continued)								
			23	Fire Extinguishers, CO2 20lb	10	ea	365.00	3,650				
			24	Foul Air Blowers, 7,600 cfm @ 12 inches	2	ea	10,500.00	21,000				
			25	Installation, +/- 30% of above	1	ls	6,300.00	6,300				
			26	Aeration Blowers, 1500 cfm @ 8 psig	3	ea	45,000.00	135,000				
			27	Installation, +/- 30% of above	1	ls	40,500.00	40,500				
			28	Flow Control Valve	3	ea	15,000.00	45,000				
			29	Aeration Diffuser System, installed	3,000	ea	85.00	255,000				
			30	Instrument Air Compressor, 5 hp	2	ea	4,000.00	8,000				
			31	Installation, +/- 30% of above	1	ls	2,400.00	2,400				
			32	Feed Tank, 8400 gal linear PE	1	ea	40,000.00	40,000				
			33	Installation, +/- 30% of above	1	ls	12,000.00	12,000				
			34	Utility Water / Belt Press Wash Water, ~100 gpm @125psig	2	ea	15,000.00	30,000				
			35	Installation, +/- 30% of above	1	ls	9,000.00	9,000				
				Supply / Exhaust Fans								
			36	Pipe Gallery(40,000 cfm)	2	ea	4,000.00	8,000				
			37	Mech Room (10,000 cfm)	2	ea	1,650.00	3,300				
			38	Solids Dewatering (32,000 cfm)	2	ea	3,500.00	7,000				
			39	Mobilization (+/- 5%)				72,357				
			40	Unlisted Items (+/- 15%)				227,924				
			41	Allowance for Procurement Strategy (+/- 5%)				102,581				
				Subtotal				1,850,000				
				Contingencies (+/- 25%)				450,000				
				Field Cost - (4) Mechanical Building				2,300,000				

CONSTRUCTION COST ESTIMATE

PROJECT: Central Valley Project	PREPARED BY: Regional Office, Sacramento, CA
DIVISION: West San Joaquin Division	ESTIMATE DATE: July 2007 (Rvised after DEC)
UNIT: San Luis Unit -- Drainage System -- Northerly Area	ESTIMATE TYPE: Feasibility
FEATURE: Drainage Feature Re-Evaluation Feasibility Study	PRICE LEVEL: April 2006

PROPERTY CLASS	IDENTIFIED PROPERTY	PLANT ACCOUNT	ITEM	DESCRIPTION	QUANTITY	UNIT	PRICE	AMOUNT	FIELD COST	TOTAL FIELD COST	NONCONTRACT COST	CONSTRUCTION COST
12	03			NORTHERLY AREA Se BIOTREATMENT PLANT (continued)								
		130		Structures and Improvements (continued)								
				(5) Bioreactor					33,000,000			
			1	Geotextile Fabric to Separate Native and Structural Fill	10,800	sf	0.50	5,400				
			2	Structural Fill Below Structures (imported material)	900	cy	60.00	54,000				
			3	Pile Installation, 50 ton, 60 ft	76,680	lf	65.00	4,984,200				
				Slab on Grade - Pipe Gallery								
			4	Formwork	745	sf	25.00	18,625				
			5	Rebar #8-6"OC EW/EF	90	ton	3,500.00	315,000				
			6	Waterstop	745	lf	15.00	11,175				
			7	Concrete Material	715	cy	190.00	135,850				
			8	Concrete Labor	715	cy	135.00	96,525				
				Elevated Slab - Pipe Gallery								
			9	Metal Decking	10,350	sf	25.00	258,750				
			10	Structural Steel	805	lf	55.00	44,275				
			11	Formwork	30	sf	25.00	750				
			12	Rebar #4 12"OC EW	7	ton	3,500.00	24,500				
			13	Concrete Material	270	cy	190.00	51,300				
			14	Concrete Labor	270	cy	135.00	36,450				
				Slab on Grade - Bioreactors								
			15	Formwork	9,400	sf	25.00	235,000				
			16	Rebar #8-6"OC EW/EF	315	ton	3,500.00	1,102,500				
			17	Waterstop	3,135	lf	15.00	47,025				
			18	Concrete Material	3,775	cy	190.00	717,250				
			19	Concrete Labor	3,775	cy	135.00	509,625				
			20	Concrete Liner Material	23,000	sf	10.00	230,000				
				Long Walls - Bioreactors								
			21	Formwork	100,500	sf	25.00	2,512,500				
			22	Rebar #8-6"OC EW/EF	460	ton	3,500.00	1,610,000				
			23	Waterstop	2,510	lf	15.00	37,650				
			24	Concrete Material	5,575	cy	190.00	1,059,250				
			25	Concrete Labor	5,575	cy	135.00	752,625				
			26	Concrete Liner Material	19,500	sf	10.00	195,000				

CONSTRUCTION COST ESTIMATE

PROJECT: Central Valley Project	PREPARED BY: Regional Office, Sacramento, CA
DIVISION: West San Joaquin Division	ESTIMATE DATE: July 2007 (Rvised after DEC)
UNIT: San Luis Unit -- Drainage System -- Northerly Area	ESTIMATE TYPE: Feasibility
FEATURE: Drainage Feature Re-Evaluation Feasibility Study	PRICE LEVEL: April 2006

PROPERTY CLASS	IDENTIFIED PROPERTY	PLANT ACCOUNT	ITEM	DESCRIPTION	QUANTITY	UNIT	PRICE	AMOUNT	FIELD COST	TOTAL FIELD COST	NONCONTRACT COST	CONSTRUCTION COST
12	03			NORTHERLY AREA Se BIOTREATMENT PLANT (continued)								
		130		Structures and Improvements (continued)								
				(5) Bioreactor (continued)								
				Short Walls - Bioreactors								
			27	Formwork	97,500	sf	25.00	2,437,500				
			28	Rebar #8-6"OC EW/EF	450	ton	3,500.00	1,575,000				
			29	Waterstop	2,375	lf	15.00	35,625				
			30	Concrete Material	5,415	cy	190.00	1,028,850				
			31	Concrete Labor	5,415	cy	135.00	731,025				
			32	Concrete Liner Material	18,500	sf	10.00	185,000				
				End Wall - Gallery Room								
			33	Formwork	1,000	sf	25.00	25,000				
			34	Rebar #5-12"OC EW/EF	1	ton	3,500.00	3,500				
			35	Waterstop	55	lf	15.00	825				
			36	Concrete Material	30	cy	190.00	5,700				
			37	Concrete Labor	30	cy	135.00	4,050				
			38	Stairway to Top of Bioreactor Gallery Roof	1	ea	15,000.00	15,000				
			39	Railing on top of Bioreactors Roofs	60	lf	145.00	8,700				
			40	Mobilization (+/- 5%)				1,055,050				
			41	Unlisted Items (+/- 15%)				3,323,408				
			42	Allowance for Procurement Strategy (+/- 5%)				1,520,543				
				Subtotal				27,000,000				
				Contingencies (+/- 25%)				6,000,000				
				Field Cost - (5) Bioreactor				33,000,000				
				(6) Clarifier					1,600,000			
			1	Geotextile Fabric to Separate Native and Structural Fill	3,930	sf	0.50	1,965				
			2	Structural Fill Below Structures (imported material)	75	cy	60.00	4,500				
			3	Pile Installation, 50 ton, 60 ft	4,320	lf	65.00	280,800				
				Slab on Grade - Clarifier								
			4	Formwork	785	sf	25.00	19,625				
			5	Rebar #6-12"OC EW/EF	10	ton	3,500.00	35,000				

CONSTRUCTION COST ESTIMATE

PROJECT: Central Valley Project	PREPARED BY: Regional Office, Sacramento, CA
DIVISION: West San Joaquin Division	ESTIMATE DATE: July 2007 (Rvised after DEC)
UNIT: San Luis Unit -- Drainage System -- Northerly Area	ESTIMATE TYPE: Feasibility
FEATURE: Drainage Feature Re-Evaluation Feasibility Study	PRICE LEVEL: April 2006

PROPERTY CLASS	IDENTIFIED PROPERTY	PLANT ACCOUNT	ITEM	DESCRIPTION	QUANTITY	UNIT	PRICE	AMOUNT	FIELD COST	TOTAL FIELD COST	NONCONTRACT COST	CONSTRUCTION COST
12	03			NORTHERLY AREA Se BIOTREATMENT PLANT (continued)								
		130		Structures and Improvements (continued)								
				(6) Clarifier (continued)								
			6	Waterstop	315	lf	15.00	4,725				
			7	Concrete Material	290	cy	190.00	55,100				
			8	Concrete Labor	290	cy	135.00	39,150				
			9	Concrete Liner Material	3,200	sf	10.00	32,000				
				Walls - Clarifier								
			10	Formwork	8,800	sf	25.00	220,000				
			11	Rebar #6-10"OC EW/EF	10	ton	3,500.00	35,000				
			12	Waterstop	285	lf	15.00	4,275				
			13	Concrete Material	325	cy	190.00	61,750				
			14	Concrete Labor	325	cy	135.00	43,875				
			15	Concrete Liner Material	5,100	sf	10.00	51,000				
			16	FRP Cover	3,200	sf	40.00	128,000				
			17	Mobilization (+/- 5%)				50,838				
			18	Unlisted Items (+/- 15%)				160,140				
			19	Allowance for Procurement Strategy (+/- 5%)				72,256				
				Subtotal				1,300,000				
				Contingencies (+/- 25%)				300,000				
				Field Cost - (6) Clarifier				1,600,000				
				(7) Backwash Tank					770,000			
			1	Geotextile Fabric to Separate Native and Structural Fill	1,966	sf	0.50	983				
			2	Structural Fill Below Structures (imported material)	35	cy	60.00	2,100				
			3	Pile Installation, 50 ton, 60 ft	1,920	lf	65.00	124,800				
				Slab on Grade - Backwash Tank								
			4	Formwork	395	sf	25.00	9,875				
			5	Rebar #6-12"OC EW/EF	5	ton	3,500.00	17,500				
			6	Waterstop	160	lf	15.00	2,400				
			7	Concrete Material	145	cy	190.00	27,550				
			8	Concrete Labor	145	cy	135.00	19,575				

CONSTRUCTION COST ESTIMATE

PROJECT: Central Valley Project	PREPARED BY: Regional Office, Sacramento, CA
DIVISION: West San Joaquin Division	ESTIMATE DATE: July 2007 (Rvised after DEC)
UNIT: San Luis Unit -- Drainage System -- Northerly Area	ESTIMATE TYPE: Feasibility
FEATURE: Drainage Feature Re-Evaluation Feasibility Study	PRICE LEVEL: April 2006

PROPERTY CLASS	IDENTIFIED PROPERTY	PLANT ACCOUNT	ITEM	DESCRIPTION	QUANTITY	UNIT	PRICE	AMOUNT	FIELD COST	TOTAL FIELD COST	NONCONTRACT COST	CONSTRUCTION COST
12	03			NORTHERLY AREA Se BIOTREATMENT PLANT (continued)								
		130		Structures and Improvements (continued)								
				(7) Backwash Tank (continued)								
			9	Concrete Liner Material	1,600	sf	10.00	16,000				
				Walls - Backwash Tank								
			10	Formwork	5,900	sf	25.00	147,500				
			11	Rebar #6-10"OC EW/EF	5	ton	3,500.00	17,500				
			12	Waterstop	150	lf	15.00	2,250				
			13	Concrete Material	220	cy	190.00	41,800				
			14	Concrete Labor	220	cy	135.00	29,700				
			15	Concrete Liner Material	2,550	sf	10.00	25,500				
			16	Mobilization (+/- 5%)				24,252				
			17	Unlisted Items (+/- 15%)				76,393				
			18	Allowance for Procurement Strategy (+/- 5%)				24,323				
				Subtotal				610,000				
				Contingencies (+/- 25%)				160,000				
				Field Cost - (7) Backwash Tank				770,000				
				(8) Feed Tank					240,000			
			1	Geotextile Fabric to Separate Native and Structural Fill	316	sf	0.50	158				
			2	Structural Fill Below Structures (imported material)	5	cy	60.00	300				
			3	Pile Installation, 50 ton, 60 ft	420	lf	65.00	27,300				
				Slab on Grade - Feed Tank								
			4	Formwork	160	sf	25.00	4,000				
			5	Rebar #6-12"OC EW/EF	1	ton	3,500.00	3,500				
			6	Waterstop	65	lf	15.00	975				
			7	Concrete Material	20	cy	190.00	3,800				
			8	Concrete Labor	20	cy	135.00	2,700				
			9	Concrete Liner Material	255	sf	10.00	2,550				
				Walls - Feed Tank								
			10	Formwork	2,260	sf	25.00	56,500				
			11	Rebar #6-10"OC EW/EF	3	ton	3,500.00	10,500				

CONSTRUCTION COST ESTIMATE

PROJECT: Central Valley Project	PREPARED BY: Regional Office, Sacramento, CA
DIVISION: West San Joaquin Division	ESTIMATE DATE: July 2007 (Rvised after DEC)
UNIT: San Luis Unit -- Drainage System -- Northerly Area	ESTIMATE TYPE: Feasibility
FEATURE: Drainage Feature Re-Evaluation Feasibility Study	PRICE LEVEL: April 2006

PROPERTY CLASS	IDENTIFIED PROPERTY	PLANT ACCOUNT	ITEM	DESCRIPTION	QUANTITY	UNIT	PRICE	AMOUNT	FIELD COST	TOTAL FIELD COST	NONCONTRACT COST	CONSTRUCTION COST
12	03			NORTHERLY AREA Se BIOTREATMENT PLANT (continued)								
		130		Structures and Improvements (continued)								
				(8) Feed Tank (continued)								
			12	Waterstop	60	lf	15.00	900				
			13	Concrete Material	65	cy	190.00	12,350				
			14	Concrete Labor	65	cy	135.00	8,775				
			15	Concrete Liner Material	1,000	sf	10.00	10,000				
			16	FRP Cover	255	sf	40.00	10,200				
			17	Mobilization (+/- 5%)				7,725				
			18	Unlisted Items (+/- 15%)				24,335				
			19	Allowance for Procurement Strategy (+/- 5%)				8,432				
				Subtotal				195,000				
				Contingencies (+/- 25%)				45,000				
				Field Cost - (8) Feed Tank				240,000				
				(9) Oxidation Tank					5,400,000			
			1	Geotextile Fabric to Separate Native and Structural Fill	18,700	sf	0.50	9,350				
			2	Structural Fill Below Structures (imported material)	345	cy	60.00	20,700				
			3	Pile Installation, 50 ton, 60 ft	16,020	lf	65.00	1,041,300				
				Slab on Grade - Oxidation Tank								
			4	Formwork	2,145	sf	25.00	53,625				
			5	Rebar #6-12"OC EW/EF	60	ton	3,500.00	210,000				
			6	Waterstop	860	lf	15.00	12,900				
			7	Concrete Material	1,445	cy	190.00	274,550				
			8	Concrete Labor	1,445	cy	135.00	195,075				
			9	Concrete Liner Material	3,400	sf	10.00	34,000				
				Walls - Oxidation Tank								
			10	Formwork	33,500	sf	25.00	837,500				
			11	Rebar #6-10"OC EW/EF	60	ton	3,500.00	210,000				
			12	Waterstop	840	lf	15.00	12,600				
			13	Concrete Material	1,245	cy	190.00	236,550				
			14	Concrete Labor	1,245	cy	135.00	168,075				

CONSTRUCTION COST ESTIMATE

PROJECT: Central Valley Project	PREPARED BY: Regional Office, Sacramento, CA
DIVISION: West San Joaquin Division	ESTIMATE DATE: July 2007 (Rvised after DEC)
UNIT: San Luis Unit -- Drainage System -- Northerly Area	ESTIMATE TYPE: Feasibility
FEATURE: Drainage Feature Re-Evaluation Feasibility Study	PRICE LEVEL: April 2006

PROPERTY CLASS	IDENTIFIED PROPERTY	PLANT ACCOUNT	ITEM	DESCRIPTION	QUANTITY	UNIT	PRICE	AMOUNT	FIELD COST	TOTAL FIELD COST	NONCONTRACT COST	CONSTRUCTION COST
12	03			NORTHERLY AREA Se BIOTREATMENT PLANT (continued)								
		130		Structures and Improvements (continued)								
				(9) Oxidation Tank (continued)								
			15	Concrete Liner Material	6,450	sf	10.00	64,500				
			16	Mobilization (+/- 5%)				169,036				
			17	Unlisted Items (+/- 15%)				532,464				
			18	Allowance for Procurement Strategy (+/- 5%)				217,775				
				Subtotal				4,300,000				
				Contingencies (+/- 25%)				1,100,000				
				Field Cost - (9) Oxidation Tank				5,400,000				
				(10) Biofilter - Odor Control Unit					780,000			
				Perimeter Slab for Stem								
			1	Formwork	2,700	sf	25.00	67,500				
			2	Rebar #5-6"OC EW	2	ton	3,500.00	7,000				
			3	Concrete Material	50	cy	190.00	9,500				
			4	Concrete Labor	50	cy	135.00	6,750				
				Perimeter Stem Wall								
			5	Formwork	4,500	sf	25.00	112,500				
			6	Rebar #5-12"OC EW	10	ton	3,500.00	35,000				
			7	Concrete Material	265	cy	190.00	50,350				
			8	Concrete Labor	265	cy	135.00	35,775				
			9	Geotextile, under pea gravel	626	sy	4.50	2,817				
			10	Pea Gravel	445	cy	60.00	26,700				
			11	Non-woven filter fabric	670	sy	9.00	6,030				
			12	Wood Chip, media	335	cy	45.00	15,075				
			13	Compost, media	335	cy	55.00	18,425				
			14	4" PVC, Sch 80, glued	275	lf	40.00	11,000				
			15	4" fittings, allocation	1	ls	1,500.00	1,500				
			16	2" PVC, Sch 80, glued	900	lf	30.00	27,000				
			17	2" fittings, allocation	1	ls	1,125.00	1,125				
			18	1" Poly irrigation hose	425	lf	8.00	3,400				

CONSTRUCTION COST ESTIMATE

PROJECT: Central Valley Project	PREPARED BY: Regional Office, Sacramento, CA
DIVISION: West San Joaquin Division	ESTIMATE DATE: July 2007 (Rvised after DEC)
UNIT: San Luis Unit -- Drainage System -- Northerly Area	ESTIMATE TYPE: Feasibility
FEATURE: Drainage Feature Re-Evaluation Feasibility Study	PRICE LEVEL: April 2006

PROPERTY CLASS	IDENTIFIED PROPERTY	PLANT ACCOUNT	ITEM	DESCRIPTION	QUANTITY	UNIT	PRICE	AMOUNT	FIELD COST	TOTAL FIELD COST	NONCONTRACT COST	CONSTRUCTION COST
12	03			NORTHERLY AREA Se BIOTREATMENT PLANT (continued)								
		130		Structures and Improvements (continued)								
				(10) Biofilter - Odor Control Unit (continued)								
			19	Sprinklers	18	ea	75.00	1,350				
			20	Non-freeze hose bibbs	4	ea	225.00	900				
			21	24" Fiberglass Duct Supply, yard	150	lf	290.00	43,500				
			22	Misc fittings and dampers, etc	1	ls	7,500.00	7,500				
			23	Mobilization (+/- 5%)				24,535				
			24	Unlisted Items (+/- 15%)				77,285				
			25	Allowance for Procurement Strategy (+/- 5%)				27,483				
				Subtotal				620,000				
				Contingencies (+/- 25%)				160,000				
				Field Cost - (10) Biofilter - Odor Control Unit				780,000				
				(11) Septic System					280,000			
			1	Pump Wetwell, 5' Dia	1	ea	2,700.00	2,700				
			2	Duplex chopper pump station	1	ea	11,250.00	11,250				
			3	Septic Tank, 2500 gal	1	ea	4,000.00	4,000				
			4	Distribution Box	1	ea	2,250.00	2,250				
			5	Drain Rock	1,470	cy	60.00	88,200				
			6	Supply Pipe, 4" Sch 80 PVC	250	ea	40.00	10,000				
			7	Drain Pipe, 4" perf.	660	lf	7.00	4,620				
			8	Filter Fabric	735	sy	9.00	6,615				
			9	Drain Rock	735	cy	60.00	44,100				
			10	Mobilization (+/- 5%)				8,687				
			11	Unlisted Items (+/- 15%)				27,363				

CONSTRUCTION COST ESTIMATE

PROJECT: Central Valley Project	PREPARED BY: Regional Office, Sacramento, CA
DIVISION: West San Joaquin Division	ESTIMATE DATE: July 2007 (Rvised after DEC)
UNIT: San Luis Unit -- Drainage System -- Northerly Area	ESTIMATE TYPE: Feasibility
FEATURE: Drainage Feature Re-Evaluation Feasibility Study	PRICE LEVEL: April 2006

PROPERTY CLASS	IDENTIFIED PROPERTY	PLANT ACCOUNT	ITEM	DESCRIPTION	QUANTITY	UNIT	PRICE	AMOUNT	FIELD COST	TOTAL FIELD COST	NONCONTRACT COST	CONSTRUCTION COST
12	03			NORTHERLY AREA Se BIOTREATMENT PLANT (continued)								
		130		Structures and Improvements (continued)								
				(11) Septic System (continued)								
			12	Allowance for Procurement Strategy (+/- 5%)				10,215				
				Subtotal				220,000				
				Contingencies (+/- 25%)				60,000				
				Field Cost - (11) Septic System				280,000				
				Field Cost - Structures and Improvements				51,070,000				
		152		Waterways					47,760,000			
				(1) BioReactor Internals					42,000,000			
				6" Concrete Filled PVC Piers								
			1	Sch 80 PVC Pipe	2,520	lf	50.00	126,000				
			2	Concrete and Placement	20	cy	1,000.00	20,000				
			3	GRC Panel	18,500	sf	20.00	370,000				
			4	Bottom Nozzles	41,000	lf	6.00	246,000				
			5	Concrete Topping Slab	340	sf	525.00	178,500				
			6	4" Filtrate Lateral, HDPE w/ orifice holes at 3'8"OC, incl supports	5,500	lf	40.00	220,000				
			7	4" Pipe link seal, 6" hole + sleeve	145	ea	520.00	75,400				
			8	18" Backwash Pipe, HDPE	720	lf	165.00	118,800				
			9	18" Pipe link seal, 24" hole + sleeve	145	ea	1,700.00	246,500				
			10	14" Backwash Discharge, perforated, HDPE	2,600	lf	170.00	442,000				
			11	14" Pipe link seal, 18" hole + sleeve	145	ea	1,100.00	159,500				
			12	6" Feed Pipe, HDPE	1,080	lf	50.00	54,000				
			13	6" Fittings, Straight Ts, Red. Ts, elbows (typ), HDPE	216	ea	285.00	61,560				
			14	6" Pipe link seal, 10" hole, HDPE	36	ea	405.00	14,580				
			15	4" Feed Pipe, perforated, HDPE	5,330	lf	45.00	239,850				
			16	4" Fittings, Straight Ts, Red. Ts, elbows (typ), HDPE	144	ea	150.00	21,600				
			17	Media	14,850,000	lbs	0.60	8,910,000				
			18	Media Installation	14,850,000	lbs	0.10	1,485,000				

CONSTRUCTION COST ESTIMATE

PROJECT: Central Valley Project	PREPARED BY: Regional Office, Sacramento, CA
DIVISION: West San Joaquin Division	ESTIMATE DATE: July 2007 (Rvised after DEC)
UNIT: San Luis Unit -- Drainage System -- Northerly Area	ESTIMATE TYPE: Feasibility
FEATURE: Drainage Feature Re-Evaluation Feasibility Study	PRICE LEVEL: April 2006

PROPERTY CLASS	IDENTIFIED PROPERTY	PLANT ACCOUNT	ITEM	DESCRIPTION	QUANTITY	UNIT	PRICE	AMOUNT	FIELD COST	TOTAL FIELD COST	NONCONTRACT COST	CONSTRUCTION COST
12	03			NORTHERLY AREA Se BIOTREATMENT PLANT (continued)								
		152		Waterways (continued)								
				(1) BioReactor Internals (continued)								
			19	FRP Cover	36	ea	15,000.00	540,000				
			20	AB Met Inoculums, installed	3,700,000	gal	3.50	12,950,000				
			21	Mobilization (+/- 5%)				1,323,965				
			22	Unlisted Items (+/- 15%)				4,170,488				
			23	Allowance for Procurement Strategy (+/- 5%)				2,026,257				
				Subtotal				34,000,000				
				Contingencies (+/- 25%)				8,000,000				
				Field Cost - (1) BioReactor Internals				42,000,000				
				(2) Filter Mechanical - In Pipe Gallery					4,500,000			
				Feed, Recirculate, and Filtrate								
			1	4" Piping, PVC Piping	1,080	lf	40.00	43,200				
			2	4" Fittings, Ts, Elbows, Van Stone Flanges, etc	432	ea	150.00	64,800				
			3	4" Valves, butterfly geared manual actuator	216	ea	675.00	145,800				
			4	6" Piping, PVC Piping	1,080	lf	65.00	70,200				
			5	6" Fittings, Ts, Elbows, Van Stone Flanges, etc	432	ea	285.00	123,120				
			6	6" Valves, butterfly geared manual actuator, typ for check valves	54	ea	1,000.00	54,000				
			7	6" PVC Swing Check Valves	54	ea	2,250.00	121,500				
			8	6" Valves, butterfly pneunm. act. - bw, feed, filtrate return, filtrate	90	ea	2,100.00	189,000				
			9	6" Magnetic Flowmeters	18	ea	7,500.00	135,000				
			10	pH/ORP Sensor Assemblies (sensor, piping, valving, tap)	72	ea	1,800.00	129,600				
			11	Pressure Gauge on Diaphragm, assembly	36	ea	770.00	27,720				
			12	Pressure Transmitters on Diaphragm, assembly	108	ea	3,000.00	324,000				
			13	Static Mixers, 6" dia, sch 80 PVC, w/ injection port	36	ea	2,500.00	90,000				
			14	1/2" dia magnetic flow meter	36	ea	2,600.00	93,600				
			15	Misc 1/2" hardware: solenoid, globe, ball check	36	ea	1,125.00	40,500				
			16	2" Air Release Valves	36	ea	1,400.00	50,400				
				Backwash Supply and Waste Piping								
			17	18" Dia Pneumatic BF Valve, lug	36	ea	11,500.00	414,000				

CONSTRUCTION COST ESTIMATE

PROJECT: Central Valley Project	PREPARED BY: Regional Office, Sacramento, CA
DIVISION: West San Joaquin Division	ESTIMATE DATE: July 2007 (Rvised after DEC)
UNIT: San Luis Unit -- Drainage System -- Northerly Area	ESTIMATE TYPE: Feasibility
FEATURE: Drainage Feature Re-Evaluation Feasibility Study	PRICE LEVEL: April 2006

PROPERTY CLASS	IDENTIFIED PROPERTY	PLANT ACCOUNT	ITEM	DESCRIPTION	QUANTITY	UNIT	PRICE	AMOUNT	FIELD COST	TOTAL FIELD COST	NONCONTRACT COST	CONSTRUCTION COST
12	03			NORTHERLY AREA Se BIOTREATMENT PLANT (continued)								
		152		Waterways (continued)								
				(2) Filter Mechanical - In Pipe Gallery (continued)								
			18	18" Dia Pipe HDPE	540	lf	100.00	54,000				
			19	18" Dia Fittings	108	ea	1,700.00	183,600				
			20	14" Backwash Waste	1,080	lf	75.00	81,000				
			21	14" Valves	72	ea	2,400.00	172,800				
			22	14" Fittings	144	ea	1,000.00	144,000				
			23	Foul Air, 8" FRP	900	ea	100.00	90,000				
			24	Mobilization (+/- 5%)				142,092				
			25	Unlisted Items (+/- 15%)				447,590				
			26	Allowance for Procurement Strategy (+/- 5%)				168,478				
				Subtotal				3,600,000				
				Contingencies (+/- 25%)				900,000				
				Field Cost - (2) Filter Mechanical - In Pipe Gallery				4,500,000				
				(3) Mechanical Room and Piping Gallery					970,000			
			1	Blower Piping, 10" 304 SS Sch 10 (incl yard piping)	420	lf	330.00	138,600				
			2	10" 304 SS Fittings	30	ea	1,800.00	54,000				
			3	10" BF Valve, Ductile Iron w/ Stainless Internals	6	ea	1,500.00	9,000				
			4	Feed Piping, 24" HDPE	140	lf	145.00	20,300				
			5	24" Fittings	10	ea	3,500.00	35,000				
			6	Filtrate Piping, 24" HDPE	140	lf	145.00	20,300				
			7	24" Fittings	10	ea	1,800.00	18,000				
			8	Backwash Supply, dual 18" on each side on each side of pipe gallery	700	lf	100.00	70,000				
			9	Backwash Piping, 18"	60	lf	100.00	6,000				
			10	18" Fittings	6	ea	1,800.00	10,800				
			11	Backwash Waste, dual 24" on each side on each side of pipe gallery	850	lf	145.00	123,250				
			12	Nutrient Feed Loop	755	lf	40.00	30,200				
			13	24" Fiberglass Duct Supply	445	lf	170.00	75,650				
			14	Mobilization (+/- 5%)				30,555				
			15	Unlisted Items (+/- 15%)				96,248				

CONSTRUCTION COST ESTIMATE

PROJECT: Central Valley Project	PREPARED BY: Regional Office, Sacramento, CA
DIVISION: West San Joaquin Division	ESTIMATE DATE: July 2007 (Rvised after DEC)
UNIT: San Luis Unit -- Drainage System -- Northerly Area	ESTIMATE TYPE: Feasibility
FEATURE: Drainage Feature Re-Evaluation Feasibility Study	PRICE LEVEL: April 2006

PROPERTY CLASS	IDENTIFIED PROPERTY	PLANT ACCOUNT	ITEM	DESCRIPTION	QUANTITY	UNIT	PRICE	AMOUNT	FIELD COST	TOTAL FIELD COST	NONCONTRACT COST	CONSTRUCTION COST
12	03			NORTHERLY AREA Se BIOTREATMENT PLANT (continued)								
		152		Waterways (continued)								
				(3) Mechanical Room and Piping Gallery (continued)								
			16	Allowance for Procurement Strategy (+/- 5%)				32,097				
				Subtotal				770,000				
				Contingencies (+/- 25%)				200,000				
				Field Cost - (3) Mechanical Room and Piping Gallery				970,000				
				(4) Other Mechanical Room								
				Backwash Supply					290,000			
			1	18" Magnetic Flow Meter	1	ea	30,000.00	30,000				
			2	Pressure Gauge Assemblies	8	ea	770.00	6,160				
			3	Pressure Transmitter Assemblies	1	ea	3,000.00	3,000				
			4	Backwash Strainer DPIT Assembly	2	ea	3,000.00	6,000				
			5	24" Backwash Tank Isolation Valve, geared/manual	1	ea	3,000.00	3,000				
			6	18" butterfly valves, geared / manual	2	ea	11,500.00	23,000				
			7	18" check valve	1	ea	20,000.00	20,000				
			8	Backwash Strainer (18"), allocation	1	ea	25,000.00	25,000				
			9	Dissolved Oxygen Sensors, Oxidation Tanks	3	ea	8,500.00	25,500				
				Backwash Clarifier								
			10	Pressure Gauge Assemblies	4	ea	770.00	3,080				
			11	Pressure Transmitter Assemblies	2	ea	3,000.00	6,000				
			12	High level float switch	2	ea	400.00	800				
			13	4" PVC Swing Check Valves	2	ea	2,250.00	4,500				
			14	4" Eccentric Plug Valves	18	ea	520.00	9,360				
				Nutrient Feed System								
			15	High level float switch	1	ea	400.00	400				
			16	Ultrasonic Level Sensor/Transmitter	1	ea	1,200.00	1,200				
			17	Globe Valves, 3"	9	ea	450.00	4,050				
			18	Pressure Gauge Assemblies	1	ea	770.00	770				
			19	High Pressure Relief Valves	2	ea	1,125.00	2,250				

CONSTRUCTION COST ESTIMATE

PROJECT: Central Valley Project	PREPARED BY: Regional Office, Sacramento, CA
DIVISION: West San Joaquin Division	ESTIMATE DATE: July 2007 (Rvised after DEC)
UNIT: San Luis Unit -- Drainage System -- Northerly Area	ESTIMATE TYPE: Feasibility
FEATURE: Drainage Feature Re-Evaluation Feasibility Study	PRICE LEVEL: April 2006

PROPERTY CLASS	IDENTIFIED PROPERTY	PLANT ACCOUNT	ITEM	DESCRIPTION	QUANTITY	UNIT	PRICE	AMOUNT	FIELD COST	TOTAL FIELD COST	NONCONTRACT COST	CONSTRUCTION COST
12	03			NORTHERLY AREA Se BIOTREATMENT PLANT (continued)								
		152		Waterways (continued)								
				(4) Other Mechanical Room (continued)								
				Drain Sump								
			20	High level float switch	1	ea	400.00	400				
			21	Ultrasonic Level Sensor/Transmitter	1	ea	1,200.00	1,200				
			22	4" PVC Swing Check Valves	2	ea	2,250.00	4,500				
			23	4" Butterfly valves	2	ea	400.00	800				
			24	Mobilization (+/- 5%)				9,049				
			25	Unlisted Items (+/- 15%)				28,503				
			26	Allowance for Procurement Strategy (+/- 5%)				11,479				
				Subtotal				230,000				
				Contingencies (+/- 25%)				60,000				
				Field Cost - (4) Other Mechanical Room				290,000				
				Field Cost - Waterways				47,760,000				
		160		Pumps and Prime Movers					1,950,000			
				Mechanical Building - Equipment								
			1	Backwash Pump, 8960 gpm	2	ea	90,000.00	180,000				
			2	125 HP VFD, custom engineered	2	ea	30,000.00	60,000				
			3	Installation, +/- 30% of above	1	ls	72,000.00	72,000				
			4	Feed Pumps, 5000 gpm	2	ea	90,000.00	180,000				
			5	Installation, +/- 30% of above	1	ls	54,000.00	54,000				
			6	Nutrient Pumps, 5 gpm	1	ea	7,500.00	7,500				
			7	Installation, +/- 30% of above	1	ls	2,250.00	2,250				
			8	Recycle Pumps, 350 gpm	36	ea	12,500.00	450,000				
			9	Installation, +/- 30% of above	1	ls	135,000.00	135,000				
			10	Clarifier Sludge/Decant Pump, 300 gpm	1	ea	20,000.00	20,000				
			11	5 HP VFD, custom engineered	1	ea	7,000.00	7,000				
			12	Installation, +/- 30% of above	1	ls	8,100.00	8,100				

CONSTRUCTION COST ESTIMATE

PROJECT: Central Valley Project	PREPARED BY: Regional Office, Sacramento, CA
DIVISION: West San Joaquin Division	ESTIMATE DATE: July 2007 (Rvised after DEC)
UNIT: San Luis Unit -- Drainage System -- Northerly Area	ESTIMATE TYPE: Feasibility
FEATURE: Drainage Feature Re-Evaluation Feasibility Study	PRICE LEVEL: April 2006

PROPERTY CLASS	IDENTIFIED PROPERTY	PLANT ACCOUNT	ITEM	DESCRIPTION	QUANTITY	UNIT	PRICE	AMOUNT	FIELD COST	TOTAL FIELD COST	NONCONTRACT COST	CONSTRUCTION COST
12	03			NORTHERLY AREA Se BIOTREATMENT PLANT (continued)								
		160		Pumps and Prime Movers (continued)								
			13	Drain Pumps, duplex submersible package w/ control panel	2	ea	20,000.00	40,000				
			14	Installation, +/- 30% of above	1	ls	12,000.00	12,000				
			15	Mobilization (+/- 5%)				61,393				
			16	Unlisted Items (+/- 15%)				193,386				
			17	Allowance for Procurement Strategy (+/- 5%)				77,371				
				Subtotal				1,560,000				
				Contingencies (+/- 25%)				390,000				
				Field Cost - Pumps and Prime Movers				1,950,000				
		170		Accessory Electrical Equipment					840,000			
				Electrical, associated with process mechanical								
			1	MCCs, VFDs, and Distribution Panels, per supplier quote	1	ls	300,000.00	300,000				
			2	Inst of elec eq incl terminations, tax, sbcntrctr OH&P, +/- 50% of above	1	ls	150,000.00	150,000				
			3	Mechanical Bldg conduit to process motors	780	lf	25.00	19,500				
			4	Pipe Gallery, conduit to process motors	1,080	lf	25.00	27,000				
			5	Solids Process Building, conduit to motors	250	lf	25.00	6,250				
			6	Yard conduit	1,000	lf	25.00	25,000				
			7	Mobilization (+/- 5%)				26,388				
			8	Unlisted Items (+/- 15%)				83,121				
			9	Allowance for Procurement Strategy (+/- 5%)				32,742				
				Subtotal				670,000				
				Contingencies (+/- 25%)				170,000				
				Field Cost - Accessory Electrical Equipment				840,000				

CONSTRUCTION COST ESTIMATE

PROJECT: Central Valley Project	PREPARED BY: Regional Office, Sacramento, CA
DIVISION: West San Joaquin Division	ESTIMATE DATE: July 2007 (Rvised after DEC)
UNIT: San Luis Unit -- Drainage System -- Northerly Area	ESTIMATE TYPE: Feasibility
FEATURE: Drainage Feature Re-Evaluation Feasibility Study	PRICE LEVEL: April 2006

PROPERTY CLASS	IDENTIFIED PROPERTY	PLANT ACCOUNT	ITEM	DESCRIPTION	QUANTITY	UNIT	PRICE	AMOUNT	FIELD COST	TOTAL FIELD COST	NONCONTRACT COST	CONSTRUCTION COST
12	03			NORTHERLY AREA Se BIOTREATMENT PLANT (continued)								
		180		Installed Supervisory Control Equipment					1,900,000			
			1	System Design	1	ls	30,000.00	30,000				
				Conduit and Wire, per pair of two trainsl (all 1") - installed								
			2	Flex cndt, from ea device to J box, I&C power (1 point ea)	7,200	lf	25.00	180,000				
			3	Flex cndt, from ea device to J box, signal (1 point ea)	7,200	lf	25.00	180,000				
			4	Rgd cndt, from ea device to J box, I&C power (4 pts/cmn. conduit)	7,200	lf	25.00	180,000				
			5	Rgd cndt, from ea device to J box, signal (4 pts/common conduit)	7,200	lf	25.00	180,000				
				Conduit and Wire, trunk lines - gallery to control room (all 2")								
			6	Rigid conduit, I&C power	420	lf	25.00	10,500				
			7	Rigid conduit, signal	420	lf	25.00	10,500				
				Conduit and Wire, Mechanical Room (all 1" assumed) all installed								
			8	Flex cndt, from ea device to jnctn box, I&C power (1 pnt ea)	500	lf	25.00	12,500				
			9	Flex cndt, from ea device to jnctn box, signal (1 pnt ea)	500	lf	25.00	12,500				
			10	Rigid conduit, I&C power	500	lf	25.00	12,500				
			11	Rigid conduit, signal	500	lf	25.00	12,500				
			12	Rigid conduit, I&C power trunk	60	lf	25.00	1,500				
			13	Rigid conduit, signal trunk mech bldg	60	lf	25.00	1,500				
			14	Rigid conduit, signal trunk solids dewatering	150	lf	25.00	3,750				
			15	PLC Cabinet (dual proc's, 6' panel, 10" Color HMI, batt bckp), inst	1	ea	110,000.00	110,000				
			16	Remote I/O Racks, installed	1	ea	22,500.00	22,500				
			17	Desktop PC and Switch in Admin Bldg	1	ea	12,000.00	12,000				
			18	Terminations	225	hr	120.00	27,000				
				Testing (team of two tech's)								
			19	Continuity Testing	340	hr	120.00	40,800				
			20	Loop Testing	230	hr	120.00	27,600				
			21	Signal Conditioning and tagging	230	hr	120.00	27,600				
			22	Programming (Allocation)	1	ls	110,000.00	110,000				

CONSTRUCTION COST ESTIMATE

PROJECT: Central Valley Project	PREPARED BY: Regional Office, Sacramento, CA
DIVISION: West San Joaquin Division	ESTIMATE DATE: July 2007 (Rvised after DEC)
UNIT: San Luis Unit -- Drainage System -- Northerly Area	ESTIMATE TYPE: Feasibility
FEATURE: Drainage Feature Re-Evaluation Feasibility Study	PRICE LEVEL: April 2006

PROPERTY CLASS	IDENTIFIED PROPERTY	PLANT ACCOUNT	ITEM	DESCRIPTION	QUANTITY	UNIT	PRICE	AMOUNT	FIELD COST	TOTAL FIELD COST	NONCONTRACT COST	CONSTRUCTION COST
12	03			NORTHERLY AREA Se BIOTREATMENT PLANT (continued)								
		180		Installed Supervisory Control Equipment (continued)								
			23	Mobilization (+/- 5%)				60,263				
			24	Unlisted Items (+/- 15%)				189,827				
			25	Allowance for Procurement Strategy (+/- 5%)				94,661				
				Subtotal				1,550,000				
				Contingencies (+/- 25%)				350,000				
				Field Cost - Installed Supervisory Control Equipment				1,900,000				
				FACILITATING SERVICES (2%)								
				INVESTIGATIONS (3%)								
				DESIGNS & SPECIFICATIONS (10%)								
				CONSTRUCTION SUPERVISION (12%)								
				OTHER COSTS (+/- 27%)							26,465,000	

CONSTRUCTION COST ESTIMATE

PROJECT: Central Valley Project	PREPARED BY: Regional Office, Sacramento, CA
DIVISION: West San Joaquin Division	ESTIMATE DATE: July 2007 (Rvised after DEC)
UNIT: San Luis Unit -- Drainage System -- Northerly Area	ESTIMATE TYPE: Feasibility
FEATURE: Drainage Feature Re-Evaluation Feasibility Study	PRICE LEVEL: April 2006

PROPERTY CLASS	IDENTIFIED PROPERTY	PLANT ACCOUNT	ITEM	DESCRIPTION	QUANTITY	UNIT	PRICE	AMOUNT	FIELD COST	TOTAL FIELD COST	NONCONTRACT COST	CONSTRUCTION COST
12	04			NORTHERLY AREA - EVAPORATION PONDS - Ponds will occupy a						336,022,000	92,478,000	428,500,000
				total area of 1650 acres. There will be one terminal cell initially,								
				with new cells to follow in 12.5, 25, and 37.5 years respectfully.								
				(1) INITIAL POND CONSTRUCTION						290,242,000	79,758,000	370,000,000
		100		Land and Rights					7,900,000			
			1	Undeveloped Land -- Fee	20	Ac	2,100.00	42,000				
			2	Seasonal Crop Land -- Fee	1,630	Ac	4,000.00	6,520,000				
			3	Unlisted Items (+/- 5%)				338,000				
				Subtotal				6,900,000				
				Contingencies (+/- 15%)				1,000,000				
				Field Cost - Land and Rights				7,900,000				
		130		Structures and Improvements					11,500,000			
				General Site Preparation								
			1	Removal of gravel roadway 24'x3'x20,000'; spread waste on site	53,333	cy	3.00	159,999				
			2	Fill in ditch/canal (assume 20'x8'x30,300'), use existing bank material	180,000	cy	3.00	540,000				
			3	Chain link - 6ft w/3 strands barbed wire	38,700	lf	30.00	1,161,000				
			4	Gates - 20 ft wide	4	ea	1,550.00	6,200				
				Steel Maintenance Building								
			5	Concrete foundation slab - 20'x40'x2	60	cy	1,000.00	60,000				
			6	Type V cement	20	ton	170.00	3,400				
			7	Reinforcement	9,000	lb	1.75	15,750				
			8	Pre-fab 800sf steel building	1	ea	27,000.00	27,000				
				Monitoring Well:								
			9	Furnish and Install Monitoring Wells - D=2"; Depth=60', encased	20	ea	7,000.00	140,000				
				Perimeter Drains:								
			10	Excavation for interceptor trench - 2'x7'x78,400'	40,700	cy	4.50	183,150				
			11	F&I Sand filter material (24 mile haul)	29,300	cy	60.00	1,758,000				
			12	F&I Gravel drain material (24 mile haul) - 4 sf /ft for 8" drain pipe	11,600	cy	70.00	812,000				
			13	F&I 8" dia PVC slotted drain pipe	78,400	lf	20.00	1,568,000				
			14	Excavation for waste trench	40,700	cy	3.00	122,100				

CONSTRUCTION COST ESTIMATE

PROJECT: Central Valley Project	PREPARED BY: Regional Office, Sacramento, CA
DIVISION: West San Joaquin Division	ESTIMATE DATE: July 2007 (Rvised after DEC)
UNIT: San Luis Unit -- Drainage System -- Northerly Area	ESTIMATE TYPE: Feasibility
FEATURE: Drainage Feature Re-Evaluation Feasibility Study	PRICE LEVEL: April 2006

PROPERTY CLASS	IDENTIFIED PROPERTY	PLANT ACCOUNT	ITEM	DESCRIPTION	QUANTITY	UNIT	PRICE	AMOUNT	FIELD COST	TOTAL FIELD COST	NONCONTRACT COST	CONSTRUCTION COST
12	04			NORTHERLY AREA - EVAPORATION PONDS (continued)								
				(1) INITIAL POND CONSTRUCTION (continued)								
		130		Structures and Improvements (continued)								
			15	Inspection/Cleanout/Sump Manhole - D=5'xH=8' - FRP preformed	100	ea	10,000.00	1,000,000				
			16	Inspection/Cleanout/Sump Manhole - D=5'xH=12' - FRP preformed	60	ea	12,000.00	720,000				
			17	Return Flow Pump - D=4"; TDH=20'; w/ auto on/off	100	ea	500.00	50,000				
			18	Mobilization (+/- 5%)				416,330				
			19	Unlisted Items (+/- 10%)				857,071				
				Subtotal				9,600,000				
				Contingencies (+/- 20%)				1,900,000				
				Field Cost - Structures and Improvements				11,500,000				
		150		Reservoirs					110,000,000			
				Liners for Concentration Cells								
				Furnish and Install Geomembrane Liner - 560,000 SY								
			1	F&I 40 mil thick LDPE liner - 560,000 SY	6,000,000	sy	6.50	39,000,000				
			2	Excavation - Top 20" and stockpile	3,300,000	cy	3.00	9,900,000				
			3	Prep surface for LDPE liner	6,000,000	sy	0.15	900,000				
			4	Place from stockpile and compact (10% Loss)	2,970,000	cy	10.00	29,700,000				
			5	Mobilization (+/- 5%)				3,975,000				
			6	Unlisted Items (+/- 10%)				8,525,000				
				Subtotal				92,000,000				
				Contingencies (+/- 20%)				18,000,000				
				Field Cost - Reservoirs				110,000,000				

CONSTRUCTION COST ESTIMATE

PROJECT: Central Valley Project	PREPARED BY: Regional Office, Sacramento, CA
DIVISION: West San Joaquin Division	ESTIMATE DATE: July 2007 (Rvised after DEC)
UNIT: San Luis Unit -- Drainage System -- Northerly Area	ESTIMATE TYPE: Feasibility
FEATURE: Drainage Feature Re-Evaluation Feasibility Study	PRICE LEVEL: April 2006

PROPERTY CLASS	IDENTIFIED PROPERTY	PLANT ACCOUNT	ITEM	DESCRIPTION	QUANTITY	UNIT	PRICE	AMOUNT	FIELD COST	TOTAL FIELD COST	NONCONTRACT COST	CONSTRUCTION COST
12	04			NORTHERLY AREA - EVAPORATION PONDS (continued)								
				(1) INITIAL POND CONSTRUCTION (continued)								
		152		Waterways					155,000,000			
				Sheetpile Embankment Dikes (includes 1 terminal cell):								
			1	Perimeter walls, 49,000'x20' long, furnish and drive 10 ft	980,000	sf	16.00	15,680,000				
			2	Interior walls, 58,500'x20' long, furnish and drive 10 ft	1,170,000	sf	16.00	18,720,000				
			3	Compacted embankment, furnish and place	3,640,000	cy	15.00	54,600,000				
			4	Scarify footprint (12" disc)	477,800	sy	1.00	477,800				
			5	Excavate compacted embankment	1,786,000	cy	10.00	17,860,000				
			6	Waste on site	1,786,000	cy	3.00	5,358,000				
			7	Mobilization (+/- 5%)				5,634,790				
			8	Unlisted Items (+/- 10%)				11,669,410				
				Subtotal				130,000,000				
				Contingencies (+/- 20%)				25,000,000				
				Field Cost - Waterways				155,000,000				
		153		Waterway Structures					5,800,000			
				Gate Structure (26 ea)								
			1	Reinforced Concrete 81 CY each gate	2,110	cy	1,000.00	2,110,000				
			2	Cast in place - type V cement	700	ton	170.00	119,000				
			3	Epoxy coated reinforcement assumed	316,000	lb	2.00	632,000				
			4	Stoplogs - 1 set = 4 stoplogs, Avg 2.5ft x 12ft x 4in	104	set	1,000.00	104,000				
				Furnish and Lay the following smooth double wall HDPE Pipe:								
			5	24 in dia. - 20 ft long	26	ea	1,500.00	39,000				
				Gate Structure (10 ea under drainage canal)								
			6	Reinforced Concrete 81 CY each gate	810	cy	1,000.00	810,000				
			7	Cast in place - type V cement	270	ton	170.00	45,900				
			8	Epoxy coated reinforcement assumed	122,000	lb	2.00	244,000				
			9	Stoplogs - 1 set = 4 stoplogs, Avg 2.5ft x 12ft x 4in	40	set	1,000.00	40,000				
			10	Furnish and Lay smooth double wall HDPE Pipe, 24 in dia	200	lf	75.00	15,000				

CONSTRUCTION COST ESTIMATE

PROJECT: Central Valley Project	PREPARED BY: Regional Office, Sacramento, CA
DIVISION: West San Joaquin Division	ESTIMATE DATE: July 2007 (Rvised after DEC)
UNIT: San Luis Unit -- Drainage System -- Northerly Area	ESTIMATE TYPE: Feasibility
FEATURE: Drainage Feature Re-Evaluation Feasibility Study	PRICE LEVEL: April 2006

PROPERTY CLASS	IDENTIFIED PROPERTY	PLANT ACCOUNT	ITEM	DESCRIPTION	QUANTITY	UNIT	PRICE	AMOUNT	FIELD COST	TOTAL FIELD COST	NONCONTRACT COST	CONSTRUCTION COST
12	04			NORTHERLY AREA - EVAPORATION PONDS (continued)								
				(1) INITIAL POND CONSTRUCTION (continued)								
		153		Waterway Structures (continued)								
			11	Concrete to hold down pipe in trench (includes conc, cement, reinf)	15	cy	1,325.00	19,875				
			12	Mobilization (+/- 5%)				208,939				
			13	Unlisted Items (+/- 10%)				412,286				
				Subtotal				4,800,000				
				Contingencies (+/- 20%)				1,000,000				
				Field Cost - Waterway Structures				5,800,000				
		199		Miscellaneous Installed Equipment					42,000			
			1	Mobile Emergency Pump - THD=20'; pump & hose mobile-on skids	2	ea	15,000.00	30,000				
			2	Mobilization (+/- 5%)				1,500				
			3	Unlisted Items (+/- 10%)				3,500				
				Subtotal				35,000				
				Contingencies (+/- 20%)				7,000				
				Field Cost - Miscellaneous Installed Equipment				42,000				
				FACILITATING SERVICES (2%)								
				INVESTIGATIONS (3%)								
				DESIGNS & SPECIFICATIONS (10%)								
				CONSTRUCTION SUPERVISION (12%)								
				OTHER COSTS (+/- 27%)							79,758,000	

CONSTRUCTION COST ESTIMATE

PROJECT: Central Valley Project	PREPARED BY: Regional Office, Sacramento, CA
DIVISION: West San Joaquin Division	ESTIMATE DATE: July 2007 (Rvised after DEC)
UNIT: San Luis Unit -- Drainage System -- Northerly Area	ESTIMATE TYPE: Feasibility
FEATURE: Drainage Feature Re-Evaluation Feasibility Study	PRICE LEVEL: April 2006

PROPERTY CLASS	IDENTIFIED PROPERTY	PLANT ACCOUNT	ITEM	DESCRIPTION	QUANTITY	UNIT	PRICE	AMOUNT	FIELD COST	TOTAL FIELD COST	NONCONTRACT COST	CONSTRUCTION COST
12	04			NORTHERLY AREA - EVAPORATION PONDS (continued)								
				(2) FUTURE ADDITIONAL TERMINAL CELL - 12.5 YEARS LATER						15,260,000	4,240,000	19,500,000
		100		Land and Rights								
				Costs of Land and Rights have been included with Initial Construction.								
		130		Structures and Improvements					360,000			
				Perimeter Drains:								
			1	Excavation for interceptor trench - 2'x7'x4050'	2,100	cy	4.50	9,450				
			2	F&I Sand filter material (24 mile haul)	1,500	cy	60.00	90,000				
			3	F&I Gravel drain material (24 mile haul) - 4 sf /ft for 8" drain pipe	600	cy	70.00	42,000				
			4	F&I 8" dia PVC slotted drain pipe	4,050	lf	20.00	81,000				
			5	Excavation for waste trench	2,100	cy	3.00	6,300				
			6	Inspection/Cleanout/Sump Manhole - D=5'xH=8' - FRP preformed	3	ea	10,000.00	30,000				
			7	Return Flow Pump - D=4"; TDH=20'; w/ auto on/off	3	ea	500.00	1,500				
			8	Mobilization (+/- 5%)				13,013				
			9	Unlisted Items (+/- 10%)				26,738				
				Subtotal				300,000				
				Contingencies (+/- 20%)				60,000				
				Field Cost - Structures and Improvements				360,000				
		150		Reservoirs					8,600,000			
				Liners for Concentration Cells								
				Furnish and Install Geomembrane Liner - 464,500 SY								
			1	F&I 40 mil thick LDPE liner - 464,500 SY	464,500	sy	6.50	3,019,250				
			2	Excavation - Top 20" and stockpile	257,500	cy	3.00	772,500				
			3	Prep surface for LDPE liner	464,500	sy	0.15	69,675				
			4	Place from stockpile and compact (10% Loss)	231,700	cy	10.00	2,317,000				
			5	Mobilization (+/- 5%)				308,921				

CONSTRUCTION COST ESTIMATE

PROJECT: Central Valley Project	PREPARED BY: Regional Office, Sacramento, CA
DIVISION: West San Joaquin Division	ESTIMATE DATE: July 2007 (Rvised after DEC)
UNIT: San Luis Unit -- Drainage System -- Northerly Area	ESTIMATE TYPE: Feasibility
FEATURE: Drainage Feature Re-Evaluation Feasibility Study	PRICE LEVEL: April 2006

PROPERTY CLASS	IDENTIFIED PROPERTY	PLANT ACCOUNT	ITEM	DESCRIPTION	QUANTITY	UNIT	PRICE	AMOUNT	FIELD COST	TOTAL FIELD COST	NONCONTRACT COST	CONSTRUCTION COST
12	04			NORTHERLY AREA - EVAPORATION PONDS (continued)								
				(2) FUTURE ADDITIONAL TERMINAL CELL - 12.5 YEARS (continued)								
		150		Reservoirs (continued)								
			6	Unlisted Items (+/- 10%)				612,654				
				Subtotal				7,100,000				
				Contingencies (+/- 20%)				1,500,000				
				Field Cost - Reservoirs				8,600,000				
		152		Waterways					6,300,000			
				Sheetpile Embankment Dikes for one additional terminal cell:								
			1	Perimeter walls, 4,050'x20' long, furnish and drive 10 ft	81,000	sf	16.00	1,296,000				
			2	Compacted embankment, furnish and place	152,000	cy	15.00	2,280,000				
			3	Scarify footprint (12" disc)	18,000	sy	1.00	18,000				
			4	Excavate compacted embankment	75,000	cy	10.00	750,000				
			5	Waste on site	75,000	cy	3.00	225,000				
			6	Mobilization (+/- 5%)				228,450				
			7	Unlisted Items (+/- 10%)				502,550				
				Subtotal				5,300,000				
				Contingencies (+/- 20%)				1,000,000				
				Field Cost - Waterways				6,300,000				
				FACILITATING SERVICES (2%)								
				INVESTIGATIONS (3%)								
				DESIGNS & SPECIFICATIONS (10%)								
				CONSTRUCTION SUPERVISION (12%)								
				OTHER COSTS (+/- 27%)							4,240,000	

CONSTRUCTION COST ESTIMATE

PROJECT: Central Valley Project	PREPARED BY: Regional Office, Sacramento, CA
DIVISION: West San Joaquin Division	ESTIMATE DATE: July 2007 (Rvised after DEC)
UNIT: San Luis Unit -- Drainage System -- Northerly Area	ESTIMATE TYPE: Feasibility
FEATURE: Drainage Feature Re-Evaluation Feasibility Study	PRICE LEVEL: April 2006

PROPERTY CLASS	IDENTIFIED PROPERTY	PLANT ACCOUNT	ITEM	DESCRIPTION	QUANTITY	UNIT	PRICE	AMOUNT	FIELD COST	TOTAL FIELD COST	NONCONTRACT COST	CONSTRUCTION COST
12	04			NORTHERLY AREA - EVAPORATION PONDS (continued)								
				(3) FUTURE ADDITIONAL TERMINAL CELL - 25 YEARS LATER						15,260,000	4,240,000	19,500,000
		100		Land and Rights								
				Costs of Land and Rights have been included with Initial Construction.								
		130		Structures and Improvements					360,000			
				Perimeter Drains:								
			1	Excavation for interceptor trench - 2'x7'x4050'	2,100	cy	4.50	9,450				
			2	F&I Sand filter material (24 mile haul)	1,500	cy	60.00	90,000				
			3	F&I Gravel drain material (24 mile haul) - 4 sf /ft for 8" drain pipe	600	cy	70.00	42,000				
			4	F&I 8" dia PVC slotted drain pipe	4,050	lf	20.00	81,000				
			5	Excavation for waste trench	2,100	cy	3.00	6,300				
			6	Inspection/Cleanout/Sump Manhole - D=5'xH=8' - FRP preformed	3	ea	10,000.00	30,000				
			7	Return Flow Pump - D=4"; TDH=20'; w/ auto on/off	3	ea	500.00	1,500				
			8	Mobilization (+/- 5%)				13,013				
			9	Unlisted Items (+/- 10%)				26,738				
				Subtotal				300,000				
				Contingencies (+/- 20%)				60,000				
				Field Cost - Structures and Improvements				360,000				
		150		Reservoirs					8,600,000			
				Liners for Concentration Cells								
				Furnish and Install Geomembrane Liner - 464,500 SY								
			1	F&I 40 mil thick LDPE liner - 464,500 SY	464,500	sy	6.50	3,019,250				
			2	Excavation - Top 20" and stockpile	257,500	cy	3.00	772,500				
			3	Prep surface for LDPE liner	464,500	sy	0.15	69,675				
			4	Place from stockpile and compact (10% Loss)	231,700	cy	10.00	2,317,000				
			5	Mobilization (+/- 5%)				308,921				

CONSTRUCTION COST ESTIMATE

PROJECT: Central Valley Project	PREPARED BY: Regional Office, Sacramento, CA
DIVISION: West San Joaquin Division	ESTIMATE DATE: July 2007 (Rvised after DEC)
UNIT: San Luis Unit -- Drainage System -- Northerly Area	ESTIMATE TYPE: Feasibility
FEATURE: Drainage Feature Re-Evaluation Feasibility Study	PRICE LEVEL: April 2006

PROPERTY CLASS	IDENTIFIED PROPERTY	PLANT ACCOUNT	ITEM	DESCRIPTION	QUANTITY	UNIT	PRICE	AMOUNT	FIELD COST	TOTAL FIELD COST	NONCONTRACT COST	CONSTRUCTION COST
12	04			NORTHERLY AREA - EVAPORATION PONDS (continued)								
				(3) FUTURE ADDITIONAL TERMINAL CELL - 25 YEARS (continued)								
		150		Reservoirs (continued)								
			6	Unlisted Items (+/- 10%)				612,654				
				Subtotal				7,100,000				
				Contingencies (+/- 20%)				1,500,000				
				Field Cost - Reservoirs				8,600,000				
		152		Waterways					6,300,000			
				Sheetpile Embankment Dikes for one additional terminal cell:								
			1	Perimeter walls, 4,050'x20' long, furnish and drive 10 ft	81,000	sf	16.00	1,296,000				
			2	Compacted embankment, furnish and place	152,000	cy	15.00	2,280,000				
			3	Scarify footprint (12" disc)	18,000	sy	1.00	18,000				
			4	Excavate compacted embankment	75,000	cy	10.00	750,000				
			5	Waste on site	75,000	cy	3.00	225,000				
			6	Mobilization (+/- 5%)				228,450				
			7	Unlisted Items (+/- 10%)				502,550				
				Subtotal				5,300,000				
				Contingencies (+/- 20%)				1,000,000				
				Field Cost - Waterways				6,300,000				
				FACILITATING SERVICES (2%)								
				INVESTIGATIONS (3%)								
				DESIGNS & SPECIFICATIONS (10%)								
				CONSTRUCTION SUPERVISION (12%)								
				OTHER COSTS (+/- 27%)							4,240,000	

CONSTRUCTION COST ESTIMATE

PROJECT: Central Valley Project	PREPARED BY: Regional Office, Sacramento, CA
DIVISION: West San Joaquin Division	ESTIMATE DATE: July 2007 (Rvised after DEC)
UNIT: San Luis Unit -- Drainage System -- Northerly Area	ESTIMATE TYPE: Feasibility
FEATURE: Drainage Feature Re-Evaluation Feasibility Study	PRICE LEVEL: April 2006

PROPERTY CLASS	IDENTIFIED PROPERTY	PLANT ACCOUNT	ITEM	DESCRIPTION	QUANTITY	UNIT	PRICE	AMOUNT	FIELD COST	TOTAL FIELD COST	NONCONTRACT COST	CONSTRUCTION COST
12	04			NORTHERLY AREA - EVAPORATION PONDS (continued)								
				(4) FUTURE ADDITIONAL TERMINAL CELL - 37.5 YEARS LATER						15,260,000	4,240,000	19,500,000
		100		Land and Rights								
				Costs of Land and Rights have been included with Initial Construction.								
		130		Structures and Improvements					360,000			
				Perimeter Drains:								
			1	Excavation for interceptor trench - 2'x7'x4050'	2,100	cy	4.50	9,450				
			2	F&I Sand filter material (24 mile haul)	1,500	cy	60.00	90,000				
			3	F&I Gravel drain material (24 mile haul) - 4 sf /ft for 8" drain pipe	600	cy	70.00	42,000				
			4	F&I 8" dia PVC slotted drain pipe	4,050	lf	20.00	81,000				
			5	Excavation for waste trench	2,100	cy	3.00	6,300				
			6	Inspection/Cleanout/Sump Manhole - D=5'xH=8' - FRP preformed	3	ea	10,000.00	30,000				
			7	Return Flow Pump - D=4"; TDH=20'; w/ auto on/off	3	ea	500.00	1,500				
			8	Mobilization (+/- 5%)				13,013				
			9	Unlisted Items (+/- 10%)				26,738				
				Subtotal				300,000				
				Contingencies (+/- 20%)				60,000				
				Field Cost - Structures and Improvements				360,000				
		150		Reservoirs					8,600,000			
				Liners for Concentration Cells								
				Furnish and Install Geomembrane Liner - 464,500 SY								
			1	F&I 40 mil thick LDPE liner - 464,500 SY	464,500	sy	6.50	3,019,250				
			2	Excavation - Top 20" and stockpile	257,500	cy	3.00	772,500				
			3	Prep surface for LDPE liner	464,500	sy	0.15	69,675				
			4	Place from stockpile and compact (10% Loss)	231,700	cy	10.00	2,317,000				
			5	Mobilization (+/- 5%)				308,921				

CONSTRUCTION COST ESTIMATE

PROJECT: Central Valley Project	PREPARED BY: Regional Office, Sacramento, CA
DIVISION: West San Joaquin Division	ESTIMATE DATE: July 2007 (Rvised after DEC)
UNIT: San Luis Unit -- Drainage System -- Northerly Area	ESTIMATE TYPE: Feasibility
FEATURE: Drainage Feature Re-Evaluation Feasibility Study	PRICE LEVEL: April 2006

PROPERTY CLASS	IDENTIFIED PROPERTY	PLANT ACCOUNT	ITEM	DESCRIPTION	QUANTITY	UNIT	PRICE	AMOUNT	FIELD COST	TOTAL FIELD COST	NONCONTRACT COST	CONSTRUCTION COST
12	04			NORTHERLY AREA - EVAPORATION PONDS (continued)								
				(4) FUTURE ADDITIONAL TERMINAL CELL - 37.5 YEARS (continued)								
		150		Reservoirs (continued)								
			6	Unlisted Items (+/- 10%)				612,654				
				Subtotal				7,100,000				
				Contingencies (+/- 20%)				1,500,000				
				Field Cost - Reservoirs				8,600,000				
		152		Waterways					6,300,000			
				Sheetpile Embankment Dikes for one additional terminal cell:								
			1	Perimeter walls, 4,050'x20' long, furnish and drive 10 ft	81,000	sf	16.00	1,296,000				
			2	Compacted embankment, furnish and place	152,000	cy	15.00	2,280,000				
			3	Scarify footprint (12" disc)	18,000	sy	1.00	18,000				
			4	Excavate compacted embankment	75,000	cy	10.00	750,000				
			5	Waste on site	75,000	cy	3.00	225,000				
			6	Mobilization (+/- 5%)				228,450				
			7	Unlisted Items (+/- 10%)				502,550				
				Subtotal				5,300,000				
				Contingencies (+/- 20%)				1,000,000				
				Field Cost - Waterways				6,300,000				
				FACILITATING SERVICES (2%)								
				INVESTIGATIONS (3%)								
				DESIGNS & SPECIFICATIONS (10%)								
				CONSTRUCTION SUPERVISION (12%)								
				OTHER COSTS (+/- 27%)							4,240,000	

CONSTRUCTION COST ESTIMATE

PROJECT: Central Valley Project	PREPARED BY: Regional Office, Sacramento, CA
DIVISION: West San Joaquin Division	ESTIMATE DATE: July 2007 (Rvised after DEC)
UNIT: San Luis Unit -- Drainage System -- Northerly Area	ESTIMATE TYPE: Feasibility
FEATURE: Drainage Feature Re-Evaluation Feasibility Study	PRICE LEVEL: April 2006

PROPERTY CLASS	IDENTIFIED PROPERTY	PLANT ACCOUNT	ITEM	DESCRIPTION	QUANTITY	UNIT	PRICE	AMOUNT	FIELD COST	TOTAL FIELD COST	NONCONTRACT COST	CONSTRUCTION COST
12	05			MITIGATION - Three types of habitat take up 6.850 80-acre sites.						35,600,000	9,400,000	45,000,000
				These include alternative habitat-shallow water, compensation habitat-								
				shallow water, and compensation habitat-deep water. Materials used								
				include pumps, weirs, and HDPE pipe.								
				80-Acre Unit Mitigation Features - For the breakdown of costs for					33,000,000			
				these units, see the itemized cost list in the Appendix to this estimate.								
				(1) Alternative Habitat -- Shallow Water -- Field Cost	4.550	ea	2,900,000.00	13,195,000				
				(2) Compensation Habitat -- Shallow Water -- Field Cost	0.325	ea	2,333,000.00	758,225				
				(3) Compensation Habitat -- Deep Water -- Field Cost	1.975	ea	5,200,000.00	10,270,000				
				(4) Appurtenant Facilities -- Field Cost	6.850	ea	1,210,000.00	8,288,500				
				Rounding				488,275				
				Field Cost - 80-Acre Unit Mitigation Features				33,000,000				
		100		Land and Rights -- Land type breakdown is 480 Ac Seasonal crop land and					2,600,000			
				68 Ac Undeveloped land. Will maintain presentation below for estimate								
				consistancy. Impacts is to add approximately $100,000 to cost.								
			1	Fee - Alternative Habitat-Shallow Water	364.00	Ac	4,000.00	1,456,000				
			2	Fee - Compensation Habitat-Shallow Water	26.00	Ac	4,000.00	104,000				
			3	Fee - Compensation Habitat-Deep Water	158.00	Ac	4,000.00	632,000				
			4	Unlisted Items (+/- 5%)				108,000				
				Subtotal				2,300,000				
				Contingencies (+/- 15%)				300,000				
				Field Cost - Land and Rights				2,600,000				
				FACILITATING SERVICES (2%)								
				INVESTIGATIONS (3%)								
				DESIGNS & SPECIFICATIONS (10%)								
				CONSTRUCTION SUPERVISION (12%)								
				OTHER COSTS (+/- 27%)							9,400,000	

CONSTRUCTION COST ESTIMATE

PROJECT: Central Valley Project	PREPARED BY: Regional Office, Sacramento, CA
DIVISION: West San Joaquin Division	ESTIMATE DATE: July 2007 (Rvised after DEC)
UNIT: San Luis Unit -- Drainage System -- Northerly Area	ESTIMATE TYPE: Feasibility
FEATURE: Drainage Feature Re-Evaluation Feasibility Study	PRICE LEVEL: April 2006

PROPERTY CLASS	IDENTIFIED PROPERTY	PLANT ACCOUNT	ITEM	DESCRIPTION	QUANTITY	UNIT	PRICE	AMOUNT	FIELD COST	TOTAL FIELD COST	NONCONTRACT COST	CONSTRUCTION COST
13				TRANSMISSION LINES						821,000	228,000	1,049,000
	01			DMC A/B TRANSMISSION LINE - A 12kV power service drop from						29,000	8,000	37,000
				the existing transmission line on N Brannon Road to the								
				vicinity of Pumping Plant DMC A/B.								
		182		Poles & Overhead Conductors					29,000			
			1	Service Poles, Transformer, Disconnect, & Meter	1	ea	20,000.00	20,000				
			2	Mobilization (+/- 5%)				1,000				
			3	Unlisted Items (+/- 15%)				3,000				
				Subtotal				24,000				
				Contingencies (+/- 20%)				5,000				
				Field Cost - Poles & Overhead Conductors				29,000				
				FACILITATING SERVICES (2%)								
				INVESTIGATIONS (3%)								
				DESIGNS & SPECIFICATIONS (10%)								
				CONSTRUCTION SUPERVISION (12%)								
				OTHER COSTS (+/- 27%)							8,000	

CONSTRUCTION COST ESTIMATE

PROJECT: Central Valley Project	PREPARED BY: Regional Office, Sacramento, CA
DIVISION: West San Joaquin Division	ESTIMATE DATE: July 2007 (Rvised after DEC)
UNIT: San Luis Unit -- Drainage System -- Northerly Area	ESTIMATE TYPE: Feasibility
FEATURE: Drainage Feature Re-Evaluation Feasibility Study	PRICE LEVEL: April 2006

PROPERTY CLASS	IDENTIFIED PROPERTY	PLANT ACCOUNT	ITEM	DESCRIPTION	QUANTITY	UNIT	PRICE	AMOUNT	FIELD COST	TOTAL FIELD COST	NONCONTRACT COST	CONSTRUCTION COST
13	02			DMC C TRANSMISSION LINE - A 12kV power service drop from						29,000	8,000	37,000
				the existing transmission line on N Fairfax Avenue to the vicinity of								
				Pumping Plant DMC C.								
		182		Poles & Overhead Conductors					29,000			
			1	Service Poles, Transformer, Disconnect, & Meter	1	ea	20,000.00	20,000				
			2	Mobilization (+/- 5%)				1,000				
			3	Unlisted Items (+/- 15%)				3,000				
				Subtotal				24,000				
				Contingencies (+/- 20%)				5,000				
				Field Cost - Poles & Overhead Conductors				29,000				
				FACILITATING SERVICES (2%)								
				INVESTIGATIONS (3%)								
				DESIGNS & SPECIFICATIONS (10%)								
				CONSTRUCTION SUPERVISION (12%)								
				OTHER COSTS (+/- 27%)							8,000	

CONSTRUCTION COST ESTIMATE

PROJECT: Central Valley Project	PREPARED BY: Regional Office, Sacramento, CA
DIVISION: West San Joaquin Division	ESTIMATE DATE: July 2007 (Rvised after DEC)
UNIT: San Luis Unit -- Drainage System -- Northerly Area	ESTIMATE TYPE: Feasibility
FEATURE: Drainage Feature Re-Evaluation Feasibility Study	PRICE LEVEL: April 2006

PROPERTY CLASS	IDENTIFIED PROPERTY	PLANT ACCOUNT	ITEM	DESCRIPTION	QUANTITY	UNIT	PRICE	AMOUNT	FIELD COST	TOTAL FIELD COST	NONCONTRACT COST	CONSTRUCTION COST
13	03			WCC03A TRANSMISSION LINE - A 12kV power service drop from						29,000	8,000	37,000
				the existing transmission line on a country road north of S Bennett								
				Road to the vicinity of Pumping Plant WCC03A.								
		182		Poles & Overhead Conductors					29,000			
			1	Service Poles, Transformer, Disconnect, & Meter	1	ea	20,000.00	20,000				
			2	Mobilization (+/- 5%)				1,000				
			3	Unlisted Items (+/- 15%)				3,000				
				Subtotal				24,000				
				Contingencies (+/- 20%)				5,000				
				Field Cost - Poles & Overhead Conductors				29,000				
				FACILITATING SERVICES (2%)								
				INVESTIGATIONS (3%)								
				DESIGNS & SPECIFICATIONS (10%)								
				CONSTRUCTION SUPERVISION (12%)								
				OTHER COSTS (+/- 27%)							8,000	

CONSTRUCTION COST ESTIMATE

PROJECT: Central Valley Project	PREPARED BY: Regional Office, Sacramento, CA
DIVISION: West San Joaquin Division	ESTIMATE DATE: July 2007 (Rvised after DEC)
UNIT: San Luis Unit -- Drainage System -- Northerly Area	ESTIMATE TYPE: Feasibility
FEATURE: Drainage Feature Re-Evaluation Feasibility Study	PRICE LEVEL: April 2006

PROPERTY CLASS	IDENTIFIED PROPERTY	PLANT ACCOUNT	ITEM	DESCRIPTION	QUANTITY	UNIT	PRICE	AMOUNT	FIELD COST	TOTAL FIELD COST	NONCONTRACT COST	CONSTRUCTION COST
13	04			WCC09A TRANSMISSION LINE - A 12kV power service drop from						29,000	8,000	37,000
				the existing transmission line on N Russell Avenue to the vicinity of								
				Pumping Plant WCC09A.								
		182		Poles & Overhead Conductors					29,000			
			1	Service Poles, Transformer, Disconnect, & Meter	1	ea	20,000.00	20,000				
			2	Mobilization (+/- 5%)				1,000				
			3	Unlisted Items (+/- 15%)				3,000				
				Subtotal				24,000				
				Contingencies (+/- 20%)				5,000				
				Field Cost - Poles & Overhead Conductors				29,000				
				FACILITATING SERVICES (2%)								
				INVESTIGATIONS (3%)								
				DESIGNS & SPECIFICATIONS (10%)								
				CONSTRUCTION SUPERVISION (12%)								
				OTHER COSTS (+/- 27%)							8,000	

CONSTRUCTION COST ESTIMATE

PROJECT: Central Valley Project	PREPARED BY: Regional Office, Sacramento, CA
DIVISION: West San Joaquin Division	ESTIMATE DATE: July 2007 (Rvised after DEC)
UNIT: San Luis Unit -- Drainage System -- Northerly Area	ESTIMATE TYPE: Feasibility
FEATURE: Drainage Feature Re-Evaluation Feasibility Study	PRICE LEVEL: April 2006

PROPERTY CLASS	IDENTIFIED PROPERTY	PLANT ACCOUNT	ITEM	DESCRIPTION	QUANTITY	UNIT	PRICE	AMOUNT	FIELD COST	TOTAL FIELD COST	NONCONTRACT COST	CONSTRUCTION COST
13	05			WCC10B TRANSMISSION LINE - A 12kV power service drop from						29,000	8,000	37,000
				the existing transmission line on N Russell Avenue to the vicinity of								
				Pumping Plant WCC10B.								
		182		Poles & Overhead Conductors					29,000			
			1	Service Poles, Transformer, Disconnect, & Meter	1	ea	20,000.00	20,000				
			2	Mobilization (+/- 5%)				1,000				
			3	Unlisted Items (+/- 15%)				3,000				
				Subtotal				24,000				
				Contingencies (+/- 20%)				5,000				
				Field Cost - Poles & Overhead Conductors				29,000				
				FACILITATING SERVICES (2%)								
				INVESTIGATIONS (3%)								
				DESIGNS & SPECIFICATIONS (10%)								
				CONSTRUCTION SUPERVISION (12%)								
				OTHER COSTS (+/- 27%)							8,000	

CONSTRUCTION COST ESTIMATE

PROJECT: Central Valley Project	PREPARED BY: Regional Office, Sacramento, CA
DIVISION: West San Joaquin Division	ESTIMATE DATE: July 2007 (Rvised after DEC)
UNIT: San Luis Unit -- Drainage System -- Northerly Area	ESTIMATE TYPE: Feasibility
FEATURE: Drainage Feature Re-Evaluation Feasibility Study	PRICE LEVEL: April 2006

PROPERTY CLASS	IDENTIFIED PROPERTY	PLANT ACCOUNT	ITEM	DESCRIPTION	QUANTITY	UNIT	PRICE	AMOUNT	FIELD COST	TOTAL FIELD COST	NONCONTRACT COST	CONSTRUCTION COST
13	06			WCC06D TRANSMISSION LINE - A 12kV, wood pole transmission						83,000	22,000	105,000
				line, extending 1/4 mile from the existing power line on W Cambria								
				Avenue to the vicinity of Pumping Plant WCC06D.								
		182		Poles & Overhead Conductors					83,000			
			1	Wood Pole Transmission Line	0.25	mi	150,000.00	37,500				
			2	Service Poles, Transformer, Disconnect, & Meter	1	ea	20,000.00	20,000				
			3	Mobilization (+/- 5%)				2,875				
			4	Unlisted Items (+/- 15%)				8,625				
				Subtotal				69,000				
				Contingencies (+/- 20%)				14,000				
				Field Cost - Poles & Overhead Conductors				83,000				
				FACILITATING SERVICES (2%)								
				INVESTIGATIONS (3%)								
				DESIGNS & SPECIFICATIONS (10%)								
				CONSTRUCTION SUPERVISION (12%)								
				OTHER COSTS (+/- 27%)							22,000	

CONSTRUCTION COST ESTIMATE

PROJECT: Central Valley Project	PREPARED BY: Regional Office, Sacramento, CA
DIVISION: West San Joaquin Division	ESTIMATE DATE: July 2007 (Rvised after DEC)
UNIT: San Luis Unit -- Drainage System -- Northerly Area	ESTIMATE TYPE: Feasibility
FEATURE: Drainage Feature Re-Evaluation Feasibility Study	PRICE LEVEL: April 2006

PROPERTY CLASS	IDENTIFIED PROPERTY	PLANT ACCOUNT	ITEM	DESCRIPTION	QUANTITY	UNIT	PRICE	AMOUNT	FIELD COST	TOTAL FIELD COST	NONCONTRACT COST	CONSTRUCTION COST
13	07			WCC03B TRANSMISSION LINE - A 12kV power service drop from						29,000	8,000	37,000
				the existing transmission line on N Russell Avenue to the vicinity of								
				Pumping Plant WCC03B.								
		182		Poles & Overhead Conductors					29,000			
			1	Service Poles, Transformer, Disconnect, & Meter	1	ea	20,000.00	20,000				
			2	Mobilization (+/- 5%)				1,000				
			3	Unlisted Items (+/- 15%)				3,000				
				Subtotal				24,000				
				Contingencies (+/- 20%)				5,000				
				Field Cost - Poles & Overhead Conductors				29,000				
				FACILITATING SERVICES (2%)								
				INVESTIGATIONS (3%)								
				DESIGNS & SPECIFICATIONS (10%)								
				CONSTRUCTION SUPERVISION (12%)								
				OTHER COSTS (+/- 27%)							8,000	

CONSTRUCTION COST ESTIMATE

PROJECT: Central Valley Project	PREPARED BY: Regional Office, Sacramento, CA
DIVISION: West San Joaquin Division	ESTIMATE DATE: July 2007 (Rvised after DEC)
UNIT: San Luis Unit -- Drainage System -- Northerly Area	ESTIMATE TYPE: Feasibility
FEATURE: Drainage Feature Re-Evaluation Feasibility Study	PRICE LEVEL: April 2006

PROPERTY CLASS	IDENTIFIED PROPERTY	PLANT ACCOUNT	ITEM	DESCRIPTION	QUANTITY	UNIT	PRICE	AMOUNT	FIELD COST	TOTAL FIELD COST	NONCONTRACT COST	CONSTRUCTION COST
13	08			WCC11D TRANSMISSION LINE - A 12kV power service drop from						29,000	8,000	37,000
				the existing transmission line on a country road east of N Russell								
				Avenue to the vicinity of Pumping Plant WCC11D.								
		182		Poles & Overhead Conductors					29,000			
			1	Service Poles, Transformer, Disconnect, & Meter	1	ea	20,000.00	20,000				
			2	Mobilization (+/- 5%)				1,000				
			3	Unlisted Items (+/- 15%)				3,000				
				Subtotal				24,000				
				Contingencies (+/- 20%)				5,000				
				Field Cost - Poles & Overhead Conductors				29,000				
				FACILITATING SERVICES (2%)								
				INVESTIGATIONS (3%)								
				DESIGNS & SPECIFICATIONS (10%)								
				CONSTRUCTION SUPERVISION (12%)								
				OTHER COSTS (+/- 27%)							8,000	

CONSTRUCTION COST ESTIMATE

PROJECT: Central Valley Project	PREPARED BY: Regional Office, Sacramento, CA
DIVISION: West San Joaquin Division	ESTIMATE DATE: July 2007 (Rvised after DEC)
UNIT: San Luis Unit -- Drainage System -- Northerly Area	ESTIMATE TYPE: Feasibility
FEATURE: Drainage Feature Re-Evaluation Feasibility Study	PRICE LEVEL: April 2006

PROPERTY CLASS	IDENTIFIED PROPERTY	PLANT ACCOUNT	ITEM	DESCRIPTION	QUANTITY	UNIT	PRICE	AMOUNT	FIELD COST	TOTAL FIELD COST	NONCONTRACT COST	CONSTRUCTION COST
13	09			WCC02A TRANSMISSION LINE - A 12kV power service drop from						29,000	8,000	37,000
				the existing transmission line on a country road north of Oxford Avenue								
				to the vicinity of Pumping Plant WCC02A.								
		182		Poles & Overhead Conductors					29,000			
			1	Service Poles, Transformer, Disconnect, & Meter	1	ea	20,000.00	20,000				
			2	Mobilization (+/- 5%)				1,000				
			3	Unlisted Items (+/- 15%)				3,000				
				Subtotal				24,000				
				Contingencies (+/- 20%)				5,000				
				Field Cost - Poles & Overhead Conductors				29,000				
				FACILITATING SERVICES (2%)								
				INVESTIGATIONS (3%)								
				DESIGNS & SPECIFICATIONS (10%)								
				CONSTRUCTION SUPERVISION (12%)								
				OTHER COSTS (+/- 27%)							8,000	

CONSTRUCTION COST ESTIMATE

PROJECT: Central Valley Project	PREPARED BY: Regional Office, Sacramento, CA
DIVISION: West San Joaquin Division	ESTIMATE DATE: July 2007 (Rvised after DEC)
UNIT: San Luis Unit -- Drainage System -- Northerly Area	ESTIMATE TYPE: Feasibility
FEATURE: Drainage Feature Re-Evaluation Feasibility Study	PRICE LEVEL: April 2006

PROPERTY CLASS	IDENTIFIED PROPERTY	PLANT ACCOUNT	ITEM	DESCRIPTION	QUANTITY	UNIT	PRICE	AMOUNT	FIELD COST	TOTAL FIELD COST	NONCONTRACT COST	CONSTRUCTION COST
13	10			WCC01C TRANSMISSION LINE - A 12kV, wood pole transmission						140,000	40,000	180,000
				line, extending 1/2 mile from the existing power line on a country road								
				north of Oxford Avenue to the vicinity of Pumping Plant WCC01C.								
		182		Poles & Overhead Conductors					140,000			
			1	Wood Pole Transmission Line	0.5	mi	150,000.00	75,000				
			2	Service Poles, Transformer, Disconnect, & Meter	1	ea	20,000.00	20,000				
			3	Mobilization (+/- 5%)				4,750				
			4	Unlisted Items (+/- 15%)				15,250				
				Subtotal				115,000				
				Contingencies (+/- 20%)				25,000				
				Field Cost - Poles & Overhead Conductors				140,000				
				FACILITATING SERVICES (2%)								
				INVESTIGATIONS (3%)								
				DESIGNS & SPECIFICATIONS (10%)								
				CONSTRUCTION SUPERVISION (12%)								
				OTHER COSTS (+/- 27%)							40,000	

CONSTRUCTION COST ESTIMATE

PROJECT: Central Valley Project	PREPARED BY: Regional Office, Sacramento, CA
DIVISION: West San Joaquin Division	ESTIMATE DATE: July 2007 (Rvised after DEC)
UNIT: San Luis Unit -- Drainage System -- Northerly Area	ESTIMATE TYPE: Feasibility
FEATURE: Drainage Feature Re-Evaluation Feasibility Study	PRICE LEVEL: April 2006

PROPERTY CLASS	IDENTIFIED PROPERTY	PLANT ACCOUNT	ITEM	DESCRIPTION	QUANTITY	UNIT	PRICE	AMOUNT	FIELD COST	TOTAL FIELD COST	NONCONTRACT COST	CONSTRUCTION COST
13	11			FC5 a/b TRANSMISSION LINE - A 12kV power service drop from						29,000	8,000	37,000
				the existing transmission line on N Russell Avenue to the vicinity of								
				Pumping Plant FC5 a/b.								
		182		Poles & Overhead Conductors					29,000			
			1	Service Poles, Transformer, Disconnect, & Meter	1	ea	20,000.00	20,000				
			2	Mobilization (+/- 5%)				1,000				
			3	Unlisted Items (+/- 15%)				3,000				
				Subtotal				24,000				
				Contingencies (+/- 20%)				5,000				
				Field Cost - Poles & Overhead Conductors				29,000				
				FACILITATING SERVICES (2%)								
				INVESTIGATIONS (3%)								
				DESIGNS & SPECIFICATIONS (10%)								
				CONSTRUCTION SUPERVISION (12%)								
				OTHER COSTS (+/- 27%)							8,000	

CONSTRUCTION COST ESTIMATE

PROJECT: Central Valley Project	PREPARED BY: Regional Office, Sacramento, CA
DIVISION: West San Joaquin Division	ESTIMATE DATE: July 2007 (Rvised after DEC)
UNIT: San Luis Unit -- Drainage System -- Northerly Area	ESTIMATE TYPE: Feasibility
FEATURE: Drainage Feature Re-Evaluation Feasibility Study	PRICE LEVEL: April 2006

PROPERTY CLASS	IDENTIFIED PROPERTY	PLANT ACCOUNT	ITEM	DESCRIPTION	QUANTITY	UNIT	PRICE	AMOUNT	FIELD COST	TOTAL FIELD COST	NONCONTRACT COST	CONSTRUCTION COST
13	12			PCC16D TRANSMISSION LINE - A 12kV power service drop from						29,000	8,000	37,000
				the existing transmission line on N Russell Avenue to the vicinity of								
				Pumping Plant PCC16D.								
		182		Poles & Overhead Conductors					29,000			
			1	Service Poles, Transformer, Disconnect, & Meter	1	ea	20,000.00	20,000				
			2	Mobilization (+/- 5%)				1,000				
			3	Unlisted Items (+/- 15%)				3,000				
				Subtotal				24,000				
				Contingencies (+/- 20%)				5,000				
				Field Cost - Poles & Overhead Conductors				29,000				
				FACILITATING SERVICES (2%)								
				INVESTIGATIONS (3%)								
				DESIGNS & SPECIFICATIONS (10%)								
				CONSTRUCTION SUPERVISION (12%)								
				OTHER COSTS (+/- 27%)							8,000	

CONSTRUCTION COST ESTIMATE

PROJECT: Central Valley Project	PREPARED BY: Regional Office, Sacramento, CA
DIVISION: West San Joaquin Division	ESTIMATE DATE: July 2007 (Rvised after DEC)
UNIT: San Luis Unit -- Drainage System -- Northerly Area	ESTIMATE TYPE: Feasibility
FEATURE: Drainage Feature Re-Evaluation Feasibility Study	PRICE LEVEL: April 2006

PROPERTY CLASS	IDENTIFIED PROPERTY	PLANT ACCOUNT	ITEM	DESCRIPTION	QUANTITY	UNIT	PRICE	AMOUNT	FIELD COST	TOTAL FIELD COST	NONCONTRACT COST	CONSTRUCTION COST
13	13			PCC06D TRANSMISSION LINE - A 12kV power service drop from a line						29,000	8,000	37,000
				that will be shared with Pumping Plant WCC06D to the vicinity of								
				Pumping Plant PCC06D.								
		182		Poles & Overhead Conductors					29,000			
			1	Service Poles, Transformer, Disconnect, & Meter	1	ea	20,000.00	20,000				
			2	Mobilization (+/- 5%)				1,000				
			3	Unlisted Items (+/- 15%)				3,000				
				Subtotal				24,000				
				Contingencies (+/- 20%)				5,000				
				Field Cost - Poles & Overhead Conductors				29,000				
				FACILITATING SERVICES (2%)								
				INVESTIGATIONS (3%)								
				DESIGNS & SPECIFICATIONS (10%)								
				CONSTRUCTION SUPERVISION (12%)								
				OTHER COSTS (+/- 27%)							8,000	

CONSTRUCTION COST ESTIMATE

PROJECT: Central Valley Project	PREPARED BY: Regional Office, Sacramento, CA
DIVISION: West San Joaquin Division	ESTIMATE DATE: July 2007 (Rvised after DEC)
UNIT: San Luis Unit -- Drainage System -- Northerly Area	ESTIMATE TYPE: Feasibility
FEATURE: Drainage Feature Re-Evaluation Feasibility Study	PRICE LEVEL: April 2006

PROPERTY CLASS	IDENTIFIED PROPERTY	PLANT ACCOUNT	ITEM	DESCRIPTION	QUANTITY	UNIT	PRICE	AMOUNT	FIELD COST	TOTAL FIELD COST	NONCONTRACT COST	CONSTRUCTION COST
13	14			PE-14 TRANSMISSION LINE - A 12kV, wood pole transmission						250,000	70,000	320,000
				line, extending 1 mile from the existing power line on W Cambria								
				Avenue to the vicinity of Pumping Plant PE-14.								
		182		Poles & Overhead Conductors					250,000			
			1	Wood Pole Transmission Line	1	mi	150,000.00	150,000				
			2	Service Poles, Transformer, Disconnect, & Meter	1	ea	20,000.00	20,000				
			3	Mobilization (+/- 5%)				8,500				
			4	Unlisted Items (+/- 15%)				31,500				
				Subtotal				210,000				
				Contingencies (+/- 20%)				40,000				
				Field Cost - Poles & Overhead Conductors				250,000				
				FACILITATING SERVICES (2%)								
				INVESTIGATIONS (3%)								
				DESIGNS & SPECIFICATIONS (10%)								
				CONSTRUCTION SUPERVISION (12%)								
				OTHER COSTS (+/- 27%)							70,000	

CONSTRUCTION COST ESTIMATE

PROJECT: Central Valley Project	PREPARED BY: Regional Office, Sacramento, CA
DIVISION: West San Joaquin Division	ESTIMATE DATE: July 2007 (Rvised after DEC)
UNIT: San Luis Unit -- Drainage System -- Northerly Area	ESTIMATE TYPE: Feasibility
FEATURE: Drainage Feature Re-Evaluation Feasibility Study	PRICE LEVEL: April 2006

PROPERTY CLASS	IDENTIFIED PROPERTY	PLANT ACCOUNT	ITEM	DESCRIPTION	QUANTITY	UNIT	PRICE	AMOUNT	FIELD COST	TOTAL FIELD COST	NONCONTRACT COST	CONSTRUCTION COST
13	15			NORTHERLY AREA TREATMENT PLANT TRANSMISSION LINE - A						29,000	8,000	37,000
				12kV power service drop from a line that will be shared with Pumping								
				Plant PE-14 to the vicinity of the Northerly Area Treatment Plants.								
		182		Poles & Overhead Conductors					29,000			
			1	Service Poles, Transformer, Disconnect, & Meter	1	ea	20,000.00	20,000				
			2	Mobilization (+/- 5%)				1,000				
			3	Unlisted Items (+/- 15%)				3,000				
				Subtotal				24,000				
				Contingencies (+/- 20%)				5,000				
				Field Cost - Poles & Overhead Conductors				29,000				
				FACILITATING SERVICES (2%)								
				INVESTIGATIONS (3%)								
				DESIGNS & SPECIFICATIONS (10%)								
				CONSTRUCTION SUPERVISION (12%)								
				OTHER COSTS (+/- 27%)							8,000	

CONSTRUCTION COST ESTIMATE

PROJECT: Central Valley Project	PREPARED BY: Regional Office, Sacramento, CA
DIVISION: West San Joaquin Division	ESTIMATE DATE: July 2007 (Rvised after DEC)
UNIT: San Luis Unit -- Drainage System -- Northerly Area	ESTIMATE TYPE: Feasibility
FEATURE: Drainage Feature Re-Evaluation Feasibility Study	PRICE LEVEL: April 2006

PROPERTY CLASS	IDENTIFIED PROPERTY	PLANT ACCOUNT	ITEM	DESCRIPTION	QUANTITY	UNIT	PRICE	AMOUNT	FIELD COST	TOTAL FIELD COST	NONCONTRACT COST	CONSTRUCTION COST
15				GENERAL PROPERTY						2,420,000	680,000	3,100,000
	01			SCADA ELECTRICAL & CONTROL EQUIPMENT - This communication						2,420,000	680,000	3,100,000
				system consists of a collection of antennas which allow the flow of								
				water to the Reuse Areas to be controlled at the RO Treatment Plant.								
		100		Land and Rights								
				Costs of Land and Rights have been included with RO Treatment Plant.								
		180		Installed Supervisory Control Equipment					2,420,000			
				(1) Re-Use Pump Control Located at RO Treatment Plant					390,000			
				Fiber Optic Cable and Equipment								
			1	F&I fiber optic cable, 12-fiber single mode in 2" HDPE conduit	15,000	ft	12.00	180,000				
			2	F&I splice closure, Preformed Line Products Coyote Runt closure	2	ea	450.00	900				
			3	F&I termination/splice panels, Termination for 24 fibers at each panel	7	ea	500.00	3,500				
			4	Testing	1	ls	5,600.00	5,600				
				Communications Equipment								
			5	F&I NEMA 4 eqpmnt enclosure floor mount; panel, thermostat & fan	2	ea	5,070.00	10,140				
			6	F&I 40' antenna tower	2	ea	4,010.00	8,020				
			7	F&I Antenna tower accessories; Base plate, guying, grounding	2	ea	500.00	1,000				
			8	F&I Antenna; Spread Spectrum 2.3 - 2.5 GHz Dipole	3	ea	800.00	2,400				
				F&I Coaxial cable, connectors and transient								
			9	Cable	200	ft	2.00	400				
			10	Connectors	6	ea	20.00	120				
			11	F&I Network Switch with media converter; N-TRON 508FX2	7	ea	1,570.00	10,990				
				Control Equipment								
			12	F&I Rack mntd Re-use Area prioritization server w/ operating system	1	ea	2,500.00	2,500				
			13	F&I HMI monitor	2	ea	300.00	600				

CONSTRUCTION COST ESTIMATE

PROJECT: Central Valley Project	PREPARED BY: Regional Office, Sacramento, CA
DIVISION: West San Joaquin Division	ESTIMATE DATE: July 2007 (Rvised after DEC)
UNIT: San Luis Unit -- Drainage System -- Northerly Area	ESTIMATE TYPE: Feasibility
FEATURE: Drainage Feature Re-Evaluation Feasibility Study	PRICE LEVEL: April 2006

PROPERTY CLASS	IDENTIFIED PROPERTY	PLANT ACCOUNT	ITEM	DESCRIPTION	QUANTITY	UNIT	PRICE	AMOUNT	FIELD COST	TOTAL FIELD COST	NONCONTRACT COST	CONSTRUCTION COST
15	01			SCADA ELECTRICAL & CONTROL EQUIPMENT (continued)								
		180		Installed Supervisory Control Equipment (continued)								
				(1) Re-Use Pump Control Located at RO Treatment Plant (continued)								
			14	F&I prioritization software for Re-use Area	1	ea	32,800.00	32,800				
			15	Mobilization (+/- 5%)				12,949				
			16	Unlisted Items (+/- 15%)				40,788				
			17	Allowance for Procurement Strategies (+/- 5%)				17,294				
				Subtotal				330,000				
				Contingencies (+/- 20%)				60,000				
				Field Cost - (1) Re-Use Pump Control Located at RO Ttmnt Plnt				390,000				
				(2) Re-Use Pump Control Located at Pumping Plants					1,100,000			
				Communications Equipment								
			1	F&I NEMA 4 eqpmnt enclosure floor mount; panel, thermostat & fan	12	ea	5,070.00	60,840				
			2	F&I 40' antenna tower	7	ea	4,010.00	28,070				
			3	F&I Antenna tower accessories; Base plate, guying, grounding	7	ea	500.00	3,500				
			4	F&I Antenna; Spread Spectrum 2.3 - 2.5 GHz Parabolic	7	ea	1,100.00	7,700				
				F&I Coaxial cable and connectors								
			5	Cable	500	ft	2.00	1,000				
			6	Connectors	14	ea	20.00	280				
				Control Equipment								
				F&I Plant PLC								
			7	Controller (Allen-Bradley compact Logix)	12	ea	3,800.00	45,600				
			8	F&I AC Digital input modules (Allen - Bradley 1769-IA81)	48	ea	200.00	9,600				
			9	F&I AC Digital output modules (Allen - Bradley 1769-OA8)	36	ea	350.00	12,600				
			10	F&I Analog Input Module (Allen - Bradley 1769-IF4I)	36	ea	550.00	19,800				
			11	F&I DC Digital input module (Allen - Bradley 1769-IQ16)	36	ea	280.00	10,080				
			12	F&I Power supply (Allen - Bradley 1769-PA4)	12	ea	300.00	3,600				
			13	F&I Operators panel	12	ea	2,800.00	33,600				
			14	F, T&I: Pumping Plant application, prioritization, & develpmnt software	12	ea	32,800.00	393,600				
				Power Devices								
			15	F&I UPS 500 VA APC	12	ea	1,580.00	18,960				

CONSTRUCTION COST ESTIMATE

PROJECT: Central Valley Project	PREPARED BY: Regional Office, Sacramento, CA
DIVISION: West San Joaquin Division	ESTIMATE DATE: July 2007 (Rvised after DEC)
UNIT: San Luis Unit -- Drainage System -- Northerly Area	ESTIMATE TYPE: Feasibility
FEATURE: Drainage Feature Re-Evaluation Feasibility Study	PRICE LEVEL: April 2006

PROPERTY CLASS	IDENTIFIED PROPERTY	PLANT ACCOUNT	ITEM	DESCRIPTION	QUANTITY	UNIT	PRICE	AMOUNT	FIELD COST	TOTAL FIELD COST	NONCONTRACT COST	CONSTRUCTION COST
15	01			SCADA ELECTRICAL & CONTROL EQUIPMENT (continued)								
		180		Installed Supervisory Control Equipment (continued)								
				(2) Re-Use Pump Control Located at Pumping Plants (continued)								
			16	F&I 24-VDC transducer pwr supply, Acopian Goldbox Linear regulated	12	ea	550.00	6,600				
			17	F&I 12 VDC security sys pwr supply, Acopian Goldbox Linear regulated	12	ea	550.00	6,600				
				Transient protection devices								
			18	F&I 120 VAC transient protection device; MCG Electronics Model 420	12	ea	305.00	3,660				
			19	F&I Din-rail mounted transient protection, receptacle Leviton	12	ea	75.00	900				
			20	F&I 4-to-20 mA transient protection modules, PROTEK	22	ea	120.00	2,640				
			21	F&I Coax cable transient protection modules	7	ea	150.00	1,050				
				Depth monitoring equipment								
			22	F&I NEMA 4 depth monitoring equipment enclosures with back panel	22	ea	500.00	11,000				
			23	F&I depth transducer (Druck PTX 1240)	22	ea	1,500.00	33,000				
			24	F&I 4-to-20 mA transient protection module	22	ea	75.00	1,650				
			25	Mobilization (+/- 5%)				35,797				
			26	Unlisted Items (+/- 15%)				112,759				
			27	Allowance for Procurement Strategies (+/- 5%)				45,515				
				Subtotal				910,000				
				Contingencies (+/- 20%)				190,000				
				Field Cost - (2) Re-Use Pump Control Located Pumping Plants				1,100,000				
				(3) Farm Pump Control					930,000			
				Communications Equipment								
			1	F&I NEMA 12 eqpmnt enclosure wall mount; panel, thermostat & fan	35	ea	4,000.00	140,000				
			2	F&I 15' pole antenna tower	35	ea	1,200.00	42,000				
			3	F&I Antenna tower grounding	35	ea	150.00	5,250				
			4	F&I yagi antenna	35	ea	500.00	17,500				
				F&I Coaxial cable and connectors								
			5	Cable	2,100	ft	2.00	4,200				
			6	Connectors	70	ea	20.00	1,400				
			7	F&I 2.4 GHz Spread Spectrum radios	35	ea	1,200.00	42,000				

CONSTRUCTION COST ESTIMATE

PROJECT: Central Valley Project	PREPARED BY: Regional Office, Sacramento, CA
DIVISION: West San Joaquin Division	ESTIMATE DATE: July 2007 (Rvised after DEC)
UNIT: San Luis Unit -- Drainage System -- Northerly Area	ESTIMATE TYPE: Feasibility
FEATURE: Drainage Feature Re-Evaluation Feasibility Study	PRICE LEVEL: April 2006

PROPERTY CLASS	IDENTIFIED PROPERTY	PLANT ACCOUNT	ITEM	DESCRIPTION	QUANTITY	UNIT	PRICE	AMOUNT	FIELD COST	TOTAL FIELD COST	NONCONTRACT COST	CONSTRUCTION COST
15	01			SCADA ELECTRICAL & CONTROL EQUIPMENT (continued)								
		180		Installed Supervisory Control Equipment (continued)								
				(3) Farm Pump Control (continued)								
				Control Equipment								
				F&I Plant RTU								
			8	Controller (Geomation 3300)	35	ea	1,000.00	35,000				
			9	F&I 2-AC Digital input modules (Geomation 1204 STAT)	70	ea	500.00	35,000				
			10	F&I AC Digital output modules (Geomation 1221 RO)	35	ea	550.00	19,250				
			11	F&I Analog Input Module (Geomation 1201 mA)	35	ea	525.00	18,375				
			12	F&I Power supply (Geomation 1110 PS24)	35	ea	200.00	7,000				
			13	F, T&I Software: Farm Well site software development software	35	ea	500.00	17,500				
				Transient protection devices								
			14	F&I 120 VAC transient protection device, MCG Electronics Model 420	35	ea	305.00	10,675				
			15	F&I 4-to-20 mA transient protection modules, PROTEK	35	ea	120.00	4,200				
				Depth monitoring equipment								
			16	F&I NEMA 4 depth monitoring equipment enclosures with back panel	36	ea	500.00	18,000				
			17	F&I depth transducer (Druck PTX 1240)	36	ea	1,500.00	54,000				
			18	F&I 4-to-20 mA transient protection module	36	ea	1,200.00	43,200				
				Electrical Equipment								
			19	Furnish and install into each communications equipment enclosure:	35	ea	2,800.00	98,000				
				1 hp motor starter								
				600 V, 3 position selector switch								
				Two 600 V oil tight momentary pushbuttons								
				600 V industrial control relay								
				Fuse and fuse block								
				Two 600 volt terminal blocks with 12 circuits								
				Two 600 volt push to test lamps								
				24 VDC Power Supply - Acopian Gold Box								

CONSTRUCTION COST ESTIMATE

PROJECT: Central Valley Project	PREPARED BY: Regional Office, Sacramento, CA
DIVISION: West San Joaquin Division	ESTIMATE DATE: July 2007 (Rvised after DEC)
UNIT: San Luis Unit -- Drainage System -- Northerly Area	ESTIMATE TYPE: Feasibility
FEATURE: Drainage Feature Re-Evaluation Feasibility Study	PRICE LEVEL: April 2006

PROPERTY CLASS	IDENTIFIED PROPERTY	PLANT ACCOUNT	ITEM	DESCRIPTION	QUANTITY	UNIT	PRICE	AMOUNT	FIELD COST	TOTAL FIELD COST	NONCONTRACT COST	CONSTRUCTION COST
15	01			SCADA ELECTRICAL & CONTROL EQUIPMENT (continued)								
		180		Installed Supervisory Control Equipment (continued)								
				(3) Farm Pump Control (continued)								
			20	Mobilization (+/- 5%)				30,628				
			21	Unlisted Items (+/- 15%)				96,477				
			22	Allowance for Procurement Strategies (+/- 5%)				40,346				
				Subtotal				780,000				
				Contingencies (+/- 20%)				150,000				
				Field Cost - (3) Farm Pump Control				930,000				
				Field Cost - Installed Supervisory Control Equipment				2,420,000				
				FACILITATING SERVICES (2%)								
				INVESTIGATIONS (3%)								
				DESIGNS & SPECIFICATIONS (10%)								
				CONSTRUCTION SUPERVISION (12%)								
				OTHER COSTS (+/- 27%)							680,000	

CONSTRUCTION COST ESTIMATE

PROJECT: Central Valley Project	PREPARED BY: Regional Office, Sacramento, CA
DIVISION: West San Joaquin Division	ESTIMATE DATE: July 2007 (Rvised after DEC)
UNIT: San Luis Unit -- Drainage System -- Northerly Area	ESTIMATE TYPE: Feasibility
FEATURE: Drainage Feature Re-Evaluation Feasibility Study	PRICE LEVEL: April 2006

PROPERTY CLASS	IDENTIFIED PROPERTY	PLANT ACCOUNT	ITEM	DESCRIPTION	QUANTITY	UNIT	PRICE	AMOUNT	FIELD COST	TOTAL FIELD COST	NONCONTRACT COST	CONSTRUCTION COST
				APPENDIX -- Unit Price for various styles of Mitigation Ponds.								
				One Pond unit is 80 Ac in size.								
12	05			MITIGATION - The following estimates represent the cost of one								
				80-acre site. In the Construction Cost Estimate, the Mitigation for								
				each area will be priced by the number of the various 80-acre								
				sites used.								
				(1) ALTERNATIVE HABITAT - SHALLOW WATER (For 1 - 80 acre pond)						2,900,000		
		130		Structures and Improvements					2,900,000			
			1	Excavation for moat	22,938	cy	4.50	103,221				
			2	Placement & compaction of embankment for road and ramps	17,200	cy	10.00	172,000				
			3	Gravel road surfacing, 6" deep	3,150	cy	65.00	204,750				
			4	Move earth within wetland interior	306,750	cy	5.00	1,533,750				
			5	Fencing, 6' high chain link fence	20	lf	30.00	600				
			6	Gates, 6' high x 20' wide double swing, chain link	2	ea	1,550.00	3,100				
			7	18" dia. HDPE pipe (assume DR32.5)	120	lf	50.00	6,000				
			8	Mobilization (+/- 5%)				101,171				
			9	Unlisted Items (+/- 15%)				275,408				
				Subtotal				2,400,000				
				Contingencies (+/- 20%)				500,000				
				Field Cost - Structures and Improvements				2,900,000				

CONSTRUCTION COST ESTIMATE

PROJECT: Central Valley Project	PREPARED BY: Regional Office, Sacramento, CA
DIVISION: West San Joaquin Division	ESTIMATE DATE: July 2007 (Rvised after DEC)
UNIT: San Luis Unit -- Drainage System -- Northerly Area	ESTIMATE TYPE: Feasibility
FEATURE: Drainage Feature Re-Evaluation Feasibility Study	PRICE LEVEL: April 2006

PROPERTY CLASS	IDENTIFIED PROPERTY	PLANT ACCOUNT	ITEM	DESCRIPTION	QUANTITY	UNIT	PRICE	AMOUNT	FIELD COST	TOTAL FIELD COST	NONCONTRACT COST	CONSTRUCTION COST
12	05			MITIGATION (continued)								
				(2) COMPENSATION HABITAT - SHALLOW HABITAT (For 1 - 80 acre pond)						2,333,000		
		130		Structures and Improvements					2,300,000			
			1	Excavation for moat	23,000	cy	4.50	103,500				
			2	Placement & compaction of embankment for road and ramps	22,000	cy	10.00	220,000				
			3	Gravel road surfacing, 6" deep	3,700	cy	65.00	240,500				
			4	Move earth within wetland interior	204,500	cy	5.00	1,022,500				
			5	Fencing, 6' high chain link fence	20	lf	30.00	600				
			6	Gates, 6' high x 20' wide double swing, chain link	2	ea	1,550.00	3,100				
			7	Mobilization (+/- 5%)				79,510				
			8	Unlisted Items (+/- 15%)				230,290				
				Subtotal				1,900,000				
				Contingencies (+/- 20%)				400,000				
				Field Cost - Structures and Improvements				2,300,000				
		152		Waterways					33,000			
			1	6" dia. Plastic siphon tubes, 10' long (assume HDPE DR32.5)	24	ea	110.00	2,640				
			2	18" dia. HDPE pipe (assume DR32.5)	120	lf	50.00	6,000				
			3	12" gate valves	4	ea	3,500.00	14,000				
			4	Mobilization (+/- 5%)				1,132				
			5	Unlisted Items (+/- 15%)				3,228				
				Subtotal				27,000				
				Contingencies (+/- 20%)				6,000				
				Field Cost - Waterways				33,000				

CONSTRUCTION COST ESTIMATE

PROJECT: Central Valley Project	PREPARED BY: Regional Office, Sacramento, CA
DIVISION: West San Joaquin Division	ESTIMATE DATE: July 2007 (Rvised after DEC)
UNIT: San Luis Unit -- Drainage System -- Northerly Area	ESTIMATE TYPE: Feasibility
FEATURE: Drainage Feature Re-Evaluation Feasibility Study	PRICE LEVEL: April 2006

PROPERTY CLASS	IDENTIFIED PROPERTY	PLANT ACCOUNT	ITEM	DESCRIPTION	QUANTITY	UNIT	PRICE	AMOUNT	FIELD COST	TOTAL FIELD COST	NONCONTRACT COST	CONSTRUCTION COST
12	05			MITIGATION (continued)								
				(3) COMPENSATION HABITAT - DEEP WATER (For 1 - 80 acre pond)						5,200,000		
		130		Structures and Improvements					5,200,000			
			1	Excavation for moat	23,000	cy	4.50	103,500				
			2	Placement & compaction of embankment for road and ramps	15,500	cy	10.00	155,000				
			3	Gravel road surfacing, 6" deep	3,775	cy	65.00	245,375				
			4	Move earth within wetland interior	615,000	cy	5.00	3,075,000				
			5	Fencing, 6' high chain link fence	20	lf	30.00	600				
			6	Gates, 20' wide double swing, chain link	2	ea	1,550.00	3,100				
			7	Mobilization (+/- 5%)				179,129				
			8	Unlisted Items (+/- 15%)				538,296				
				Subtotal				4,300,000				
				Contingencies (+/- 20%)				900,000				
				Field Cost - Structures and Improvements				5,200,000				

CONSTRUCTION COST ESTIMATE

PROJECT: Central Valley Project	PREPARED BY: Regional Office, Sacramento, CA
DIVISION: West San Joaquin Division	ESTIMATE DATE: July 2007 (Rvised after DEC)
UNIT: San Luis Unit -- Drainage System -- Northerly Area	ESTIMATE TYPE: Feasibility
FEATURE: Drainage Feature Re-Evaluation Feasibility Study	PRICE LEVEL: April 2006

PROPERTY CLASS	IDENTIFIED PROPERTY	PLANT ACCOUNT	ITEM	DESCRIPTION	QUANTITY	UNIT	PRICE	AMOUNT	FIELD COST	TOTAL FIELD COST	NONCONTRACT COST	CONSTRUCTION COST
12	05			MITIGATION (continued)								
				(4) APPURTENANT FACILITIES (For 1 - 80 acre pond)						1,210,000		
		130		Structures and Improvements					350,000			
				Based on 2:1 Side Slopes:								
			1	Excavation	17,692	cy	4.50	79,614				
			2	Backfill	16,923	cy	3.00	50,769				
			3	Compacting Backfill	1,731	cy	8.50	14,714				
				Trench Box Earthwork (based on vertical side slopes):								
			4	Excavation	9.6	cy	15.00	144				
			5	Backfill	8.5	cy	7.00	60				
			6	Compacting Backfill	1.2	cy	25.00	30				
				Outlet Items:								
			7	Concrete	13	cy	1,000.00	13,000				
			8	Cementitious Material	3.8	tons	170.00	646				
			9	Reinforcement Steel	1,615	lbs	1.75	2,826				
			10	Unwatering	1	ls	42,308.00	42,308				
			11	Miscellaneous Metalwork - Steel	3,846	lbs	7.00	26,922				
			12	Concrete	5.8	cy	1,000.00	5,800				
			13	Cement	1.54	tons	175.00	270				
			14	Reinforcement	769	lbs	1.75	1,346				
			15	Excavation, common	42	cy	15.00	630				
			16	Backfill	31	cy	10.00	310				
			17	Compacting backfill	31	cy	10.00	310				
			18	Gravel surfacing	3.8	cy	65.00	247				
			19	Mobilization (+/- 5%)				11,997				
			20	Unlisted Items (+/- 15%)				38,058				
				Subtotal				290,000				
				Contingencies (+/- 20%)				60,000				
				Field Cost - Structures and Improvements				350,000				

CONSTRUCTION COST ESTIMATE

PROJECT: Central Valley Project	PREPARED BY: Regional Office, Sacramento, CA
DIVISION: West San Joaquin Division	ESTIMATE DATE: July 2007 (Rvised after DEC)
UNIT: San Luis Unit -- Drainage System -- Northerly Area	ESTIMATE TYPE: Feasibility
FEATURE: Drainage Feature Re-Evaluation Feasibility Study	PRICE LEVEL: April 2006

PROPERTY CLASS	IDENTIFIED PROPERTY	PLANT ACCOUNT	ITEM	DESCRIPTION	QUANTITY	UNIT	PRICE	AMOUNT	FIELD COST	TOTAL FIELD COST	NONCONTRACT COST	CONSTRUCTION COST
12	05			MITIGATION (continued)								
				(4) APPURTENANT FACILITIES (continued)								
		152		Waterways					630,000			
			1	12 inch diameter DR32.5	1,280	lf	29.00	37,120				
			2	24 inch diameter DR32.6	4,570	lf	75.00	342,750				
			3	Inlet Stand Pipe (assumes 100' of 6" dia sch 40 stl pipe/ea)	1	ea	15,000.00	15,000				
			4	2 inch air valves	1.7	ea	1,000.00	1,700				
			5	18" Slide Gate - steel (for draining)	1	ea	5,000.00	5,000				
			6	2' x 3' Adjustable Weir (354 lbs/ea)	2	ea	7,000.00	14,000				
				Manual handwheel operator - 1680 lb capacity								
			7	6" valve (assume gate valve)	1	ea	1,500.00	1,500				
			8	Water Meter	1	ea	15,000.00	15,000				
			9	Mobilization (+/- 5%)				21,604				
			10	Unlisted Items (+/- 15%)				66,327				
				Subtotal				520,000				
				Contingencies (+/- 20%)				110,000				
				Field Cost - Waterways				630,000				

CONSTRUCTION COST ESTIMATE

PROJECT: Central Valley Project	PREPARED BY: Regional Office, Sacramento, CA
DIVISION: West San Joaquin Division	ESTIMATE DATE: July 2007 (Rvised after DEC)
UNIT: San Luis Unit -- Drainage System -- Northerly Area	ESTIMATE TYPE: Feasibility
FEATURE: Drainage Feature Re-Evaluation Feasibility Study	PRICE LEVEL: April 2006

PROPERTY CLASS	IDENTIFIED PROPERTY	PLANT ACCOUNT	ITEM	DESCRIPTION	QUANTITY	UNIT	PRICE	AMOUNT	FIELD COST	TOTAL FIELD COST	NONCONTRACT COST	CONSTRUCTION COST
12	05			MITIGATION (continued)								
				(4) APPURTENANT FACILITIES (continued)								
		160		Pumps and Prime Movers					230,000			
			1	Vertical Turbine Unit; 2-stg; 1 CFS; Rated 450 gpm; TDH=20 ft.	1	ea	50,000.00	50,000				
				w/ TEFC Induction motor @ 3 hp; 1200 rpm								
			2	Vertical Turbine Unit; 1-stg; 5 CFS; Rated 2500 gpm; TDH=25 ft.	1	ea	100,000.00	100,000				
				w/ TEFC Induction motor @ 25 hp; 900 rpm								
			3	Mobilization (+/- 5%)				7,500				
			4	Unlisted Items (+/- 15%)				23,625				
				Subtotal				190,000				
				Contingencies (+/- 20%)				40,000				
				Field Cost - Pumps and Prime Movers				230,000				

Water Needs Land Retirement Alternative

Project Cost and Construction Cost Estimates (PCEs and CCEs)

PROJECT COST ESTIMATE

PROJECT: Central Valley Project	PREPARED BY: Regional Office, Sacramento, CA
DIVISION: West San Joaquin Division	ESTIMATE DATE: July 2007 (Revised after DEC)
UNIT: San Luis Unit -- Drainage System -- Water Needs Alternative	ESTIMATE TYPE: Feasibility
FEATURE: Drainage Feature Re-Evaluation Feasibility Study	PRICE LEVEL: April 2006

PROPERTY CLASS	IDENTIFIED PROPERTY	PLANT ACCOUNT	DESCRIPTION	ORIGINAL FIELD COST	NEW INDEX	OLD INDEX	CURRENT FIELD COST	TOTAL FIELD COST	NONCONTRACT COST	CONSTRUCTION COST	TOTAL CONSTRUCTION COST
			WATER NEEDS LAND RETIREMENT - TOTAL COST					2,222,852,500	464,262,500	2,687,115,000	2,687,115,000
			WATER NEEDS RETIRED LAND - PROJECT COST					630,000,000	30,000,000	660,000,000	660,000,000
15			GENERAL PROPERTY					630,000,000	30,000,000	660,000,000	660,000,000
	01		RETIRED LAND					630,000,000	30,000,000	660,000,000	
		100	Land and Rights				630,000,000				
			NORTHERLY AREA - PROJECT COST					775,907,000	212,242,000	988,149,000	988,149,000
03			PUMPING PLANTS					67,674,000	18,226,000	85,900,000	85,900,000
	01		PUMPING PLANT DMC A/B					307,000	83,000	390,000	
		100	Land and Rights								
		160	Pumps and Prime Movers				260,000				
		170	Accessory Electrical Equipment				47,000				
	02		PUMPING PLANT DMC C					323,000	87,000	410,000	
		100	Land and Rights								
		160	Pumps and Prime Movers				270,000				
		170	Accessory Electrical Equipment				53,000				
	03		PUMPING PLANT WCC03A					5,223,000	1,377,000	6,600,000	
		100	Land and Rights								
		130	Structures and Improvements				2,100,000				
		152	Waterways				150,000				
		153	Waterways Structures				1,823,000				
		154	Waterways Protective Works				240,000				
		160	Pumps and Prime Movers				630,000				
		170	Accessory Electrical Equipment				170,000				
		175	Station Equipment				110,000				

PROJECT COST ESTIMATE

PROJECT: Central Valley Project	PREPARED BY: Regional Office, Sacramento, CA
DIVISION: West San Joaquin Division	ESTIMATE DATE: July 2007 (Revised after DEC)
UNIT: San Luis Unit -- Drainage System -- Water Needs Alternative	ESTIMATE TYPE: Feasibility
FEATURE: Drainage Feature Re-Evaluation Feasibility Study	PRICE LEVEL: April 2006

PROPERTY CLASS	IDENTIFIED PROPERTY	PLANT ACCOUNT	DESCRIPTION	ORIGINAL FIELD COST	NEW INDEX	OLD INDEX	CURRENT FIELD COST	TOTAL FIELD COST	NONCONTRACT COST	CONSTRUCTION COST	TOTAL CONSTRUCTION COST
			NORTHERLY AREA (continued)								
03			PUMPING PLANTS (continued)								
	04		PUMPING PLANT WCC09A					5,151,000	1,349,000	6,500,000	
		100	Land and Rights								
		130	Structures and Improvements				2,100,000				
		152	Waterways				150,000				
		153	Waterways Structures				1,768,000				
		154	Waterways Protective Works				240,000				
		160	Pumps and Prime Movers				630,000				
		170	Accessory Electrical Equipment				170,000				
		175	Station Equipment				93,000				
	05		PUMPING PLANT WCC10B					3,408,000	892,000	4,300,000	
		100	Land and Rights								
		130	Structures and Improvements				2,100,000				
		152	Waterways				140,000				
		153	Waterways Structures				18,000				
		154	Waterways Protective Works				240,000				
		160	Pumps and Prime Movers				630,000				
		170	Accessory Electrical Equipment				170,000				
		175	Station Equipment				110,000				
	06		PUMPING PLANT WCC06D					3,486,000	914,000	4,400,000	
		100	Land and Rights								
		130	Structures and Improvements				2,100,000				
		152	Waterways				190,000				
		153	Waterways Structures				46,000				
		154	Waterways Protective Works				240,000				
		160	Pumps and Prime Movers				630,000				
		170	Accessory Electrical Equipment				170,000				
		175	Station Equipment				110,000				

PROJECT COST ESTIMATE

PROJECT: Central Valley Project	PREPARED BY: Regional Office, Sacramento, CA
DIVISION: West San Joaquin Division	ESTIMATE DATE: July 2007 (Revised after DEC)
UNIT: San Luis Unit -- Drainage System -- Water Needs Alternative	ESTIMATE TYPE: Feasibility
FEATURE: Drainage Feature Re-Evaluation Feasibility Study	PRICE LEVEL: April 2006

PROPERTY CLASS	IDENTIFIED PROPERTY	PLANT ACCOUNT	DESCRIPTION	ORIGINAL FIELD COST	NEW INDEX	OLD INDEX	CURRENT FIELD COST	TOTAL FIELD COST	NONCONTRACT COST	CONSTRUCTION COST	TOTAL CONSTRUCTION COST
			NORTHERLY AREA (continued)								
03			PUMPING PLANTS (continued)								
	07		PUMPING PLANT WCC03B					4,643,000	1,257,000	5,900,000	
		100	Land and Rights								
		130	Structures and Improvements				2,600,000				
		152	Waterways				270,000				
		153	Waterways Structures				53,000				
		154	Waterways Protective Works				240,000				
		160	Pumps and Prime Movers				1,100,000				
		170	Accessory Electrical Equipment				270,000				
		175	Station Equipment				110,000				
	08		PUMPING PLANT WCC11D					4,643,000	1,257,000	5,900,000	
		100	Land and Rights								
		130	Structures and Improvements				2,600,000				
		152	Waterways				270,000				
		153	Waterways Structures				53,000				
		154	Waterways Protective Works				240,000				
		160	Pumps and Prime Movers				1,100,000				
		170	Accessory Electrical Equipment				270,000				
		175	Station Equipment				110,000				
	09		PUMPING PLANT WCC02A					4,643,000	1,257,000	5,900,000	
		100	Land and Rights								
		130	Structures and Improvements				2,600,000				
		152	Waterways				270,000				
		153	Waterways Structures				53,000				
		154	Waterways Protective Works				240,000				
		160	Pumps and Prime Movers				1,100,000				
		170	Accessory Electrical Equipment				270,000				
		175	Station Equipment				110,000				

PROJECT COST ESTIMATE

PROJECT: Central Valley Project	PREPARED BY: Regional Office, Sacramento, CA
DIVISION: West San Joaquin Division	ESTIMATE DATE: July 2007 (Revised after DEC)
UNIT: San Luis Unit -- Drainage System -- Water Needs Alternative	ESTIMATE TYPE: Feasibility
FEATURE: Drainage Feature Re-Evaluation Feasibility Study	PRICE LEVEL: April 2006

PROPERTY CLASS	IDENTIFIED PROPERTY	PLANT ACCOUNT	DESCRIPTION	ORIGINAL FIELD COST	NEW INDEX	OLD INDEX	CURRENT FIELD COST	TOTAL FIELD COST	NONCONTRACT COST	CONSTRUCTION COST	TOTAL CONSTRUCTION COST
			NORTHERLY AREA (continued)								
03			PUMPING PLANTS (continued)								
	10		PUMPING PLANT WCC01C					4,760,000	1,240,000	6,000,000	
		100	Land and Rights								
		130	Structures and Improvements				2,700,000				
		152	Waterways				310,000				
		153	Waterways Structures				30,000				
		154	Waterways Protective Works				240,000				
		160	Pumps and Prime Movers				1,100,000				
		170	Accessory Electrical Equipment				270,000				
		175	Station Equipment				110,000				
	11		PUMPING PLANT FC5 a/b					8,678,000	2,322,000	11,000,000	
		100	Land and Rights								
		130	Structures and Improvements				4,500,000				
		152	Waterways				605,000				
		153	Waterways Structures				525,000				
		154	Waterways Protective Works				480,000				
		160	Pumps and Prime Movers				1,880,000				
		170	Accessory Electrical Equipment				485,000				
		175	Station Equipment				203,000				
	12		PUMPING PLANT PCC16D					6,913,000	1,887,000	8,800,000	
		100	Land and Rights								
		130	Structures and Improvements				4,100,000				
		152	Waterways				440,000				
		153	Waterways Structures				510,000				
		154	Waterways Protective Works				240,000				
		160	Pumps and Prime Movers				1,300,000				
		170	Accessory Electrical Equipment				230,000				
		175	Station Equipment				93,000				

PROJECT COST ESTIMATE

PROJECT: Central Valley Project	PREPARED BY: Regional Office, Sacramento, CA
DIVISION: West San Joaquin Division	ESTIMATE DATE: July 2007 (Revised after DEC)
UNIT: San Luis Unit -- Drainage System -- Water Needs Alternative	ESTIMATE TYPE: Feasibility
FEATURE: Drainage Feature Re-Evaluation Feasibility Study	PRICE LEVEL: April 2006

PROPERTY CLASS	IDENTIFIED PROPERTY	PLANT ACCOUNT	DESCRIPTION	ORIGINAL FIELD COST	NEW INDEX	OLD INDEX	CURRENT FIELD COST	TOTAL FIELD COST	NONCONTRACT COST	CONSTRUCTION COST	TOTAL CONSTRUCTION COST
			NORTHERLY AREA (continued)								
03			PUMPING PLANTS (continued)								
	13		PUMPING PLANT PCC06D					6,913,000	1,887,000	8,800,000	
		100	Land and Rights								
		130	Structures and Improvements				4,100,000				
		152	Waterways				440,000				
		153	Waterways Structures				510,000				
		154	Waterways Protective Works				240,000				
		160	Pumps and Prime Movers				1,300,000				
		170	Accessory Electrical Equipment				230,000				
		175	Station Equipment				93,000				
	14		PUMPING PLANT PE-14					8,583,000	2,417,000	11,000,000	
		100	Land and Rights								
		130	Structures and Improvements				4,000,000				
		152	Waterways				370,000				
		153	Waterways Structures				2,590,000				
		160	Pumps and Prime Movers				1,300,000				
		170	Accessory Electrical Equipment				230,000				
		175	Station Equipment				93,000				
06			LATERALS					85,900,000	24,100,000	110,000,000	110,000,000
	01		IRRIGATION SYSTEMS					85,900,000	24,100,000	110,000,000	
		100	Land and Rights								
		152	Waterways				82,000,000				
		153	Waterway Structures				3,900,000				
07			DRAINS					27,845,000	7,755,000	35,600,000	35,600,000
	01		COLLECTION SYSTEM - Serving Reuse Area Northerly Areas					6,670,000	1,830,000	8,500,000	
		100	Land and Rights				370,000				
		152	Waterways				5,600,000				
		153	Waterway Structures				700,000				

PROJECT COST ESTIMATE

PROJECT: Central Valley Project	PREPARED BY: Regional Office, Sacramento, CA
DIVISION: West San Joaquin Division	ESTIMATE DATE: July 2007 (Revised after DEC)
UNIT: San Luis Unit -- Drainage System -- Water Needs Alternative	ESTIMATE TYPE: Feasibility
FEATURE: Drainage Feature Re-Evaluation Feasibility Study	PRICE LEVEL: April 2006

PROPERTY CLASS	IDENTIFIED PROPERTY	PLANT ACCOUNT	DESCRIPTION	ORIGINAL FIELD COST	NEW INDEX	OLD INDEX	CURRENT FIELD COST	TOTAL FIELD COST	NONCONTRACT COST	CONSTRUCTION COST	TOTAL CONSTRUCTION COST
			NORTHERLY AREA (continued)								
07			DRAINS (continued)								
	02		CONVEYANCE SYSTEM					14,000,000	4,000,000	18,000,000	
		100	Land and Rights								
		152	Waterways				12,500,000				
		153	Waterway Structures				1,500,000				
	03		DELTA - MENDOTA CANAL DRAINAGE PIPELINE					7,175,000	1,925,000	9,100,000	
		100	Land and Rights								
		152	Waterways				7,000,000				
		153	Waterway Structures				175,000				
12			SPECIAL PLANTS					591,247,000	161,253,000	752,500,000	752,500,000
	01		NORTHERLY AREA - REUSE AREAS					81,700,000	23,300,000	105,000,000	
		100	Land and Rights				41,000,000				
		152	Waterways				40,700,000				
	02		RO TREATMENT PLANT					34,390,000	9,610,000	44,000,000	
		100	Land and Rights				20,000				
		130	Structure and Improvements				17,500,000				
		152	Waterways				11,500,000				
		160	Pumps and Prime Movers				2,500,000				
		170	Accessory Electrical				2,200,000				
		180	Installed Supervisory Control System				670,000				
	03		NORTHERLY AREA Se BIOTREATMENT PLANT					103,535,000	26,465,000	130,000,000	
		100	Land and Rights				15,000				
		130	Structures and Improvements				51,070,000				
		152	Waterways				47,760,000				
		160	Pumps and Prime Movers				1,950,000				
		170	Accessory Electrical Equipment				840,000				
		180	Installed Supervisory Control Equipment				1,900,000				

PROJECT COST ESTIMATE

PROJECT: Central Valley Project	PREPARED BY: Regional Office, Sacramento, CA
DIVISION: West San Joaquin Division	ESTIMATE DATE: July 2007 (Revised after DEC)
UNIT: San Luis Unit -- Drainage System -- Water Needs Alternative	ESTIMATE TYPE: Feasibility
FEATURE: Drainage Feature Re-Evaluation Feasibility Study	PRICE LEVEL: April 2006

PROPERTY CLASS	IDENTIFIED PROPERTY	PLANT ACCOUNT	DESCRIPTION	ORIGINAL FIELD COST	NEW INDEX	OLD INDEX	CURRENT FIELD COST	TOTAL FIELD COST	NONCONTRACT COST	CONSTRUCTION COST	TOTAL CONSTRUCTION COST
			NORTHERLY AREA (continued)								
12			SPECIAL PLANTS (continued)								
	04		NORTHERLY AREA - EVAPORATION PONDS					336,022,000	92,478,000	428,500,000	
			(1) INITIAL POND CONSTRUCTION					290,242,000	79,758,000	370,000,000	
		100	Land and Rights				7,900,000				
		130	Structures and Improvements				11,500,000				
		150	Reservoirs				110,000,000				
		152	Waterways				155,000,000				
		153	Waterway Structures				5,800,000				
		199	Miscellaneous Installed Equipment				42,000				
			(2) FUTURE ADDITIONAL TERMINAL CELL - 12.5 YEARS LATER					15,260,000	4,240,000	19,500,000	
		100	Land and Rights								
		130	Structures and Improvements				360,000				
		150	Reservoirs				8,600,000				
		152	Waterways				6,300,000				
			(3) FUTURE ADDITIONAL TERMINAL CELL - 25 YEARS LATER					15,260,000	4,240,000	19,500,000	
		100	Land and Rights								
		130	Structures and Improvements				360,000				
		150	Reservoirs				8,600,000				
		152	Waterways				6,300,000				
			(4) FUTURE ADDITIONAL TERMINAL CELL - 37.5 YEARS LATER					15,260,000	4,240,000	19,500,000	
		100	Land and Rights								
		130	Structures and Improvements				360,000				
		150	Reservoirs				8,600,000				
		152	Waterways				6,300,000				

PROJECT COST ESTIMATE

PROJECT: Central Valley Project	PREPARED BY: Regional Office, Sacramento, CA
DIVISION: West San Joaquin Division	ESTIMATE DATE: July 2007 (Revised after DEC)
UNIT: San Luis Unit -- Drainage System -- Water Needs Alternative	ESTIMATE TYPE: Feasibility
FEATURE: Drainage Feature Re-Evaluation Feasibility Study	PRICE LEVEL: April 2006

PROPERTY CLASS	IDENTIFIED PROPERTY	PLANT ACCOUNT	DESCRIPTION	ORIGINAL FIELD COST	NEW INDEX	OLD INDEX	CURRENT FIELD COST	TOTAL FIELD COST	NONCONTRACT COST	CONSTRUCTION COST	TOTAL CONSTRUCTION COST
			NORTHERLY AREA (continued)								
12			SPECIAL PLANTS (continued)								
	05		NORTHERLY AREA - MITIGATION					35,600,000	9,400,000	45,000,000	
			(1) ALTERNATIVE HABITAT				13,195,000				
			(2) COMPENSATION HABITAT - SHALLOW				758,225				
			(3) COMPENSATION HABITAT - DEEP				10,270,000				
			(4) APPURTENANT FACILITIES				8,288,500				
			Rounding				488,275				
		100	Land and Rights				2,600,000				
13			TRANSMISSION LINES					821,000	228,000	1,049,000	1,049,000
	01		DMC A/B TRANSMISSION LINE					29,000	8,000	37,000	
		182	Poles & Overhead Conductors				29,000				
	02		DMC C TRANSMISSION LINE					29,000	8,000	37,000	
		182	Poles & Overhead Conductors				29,000				
	03		WCC03A TRANSMISSION LINE					29,000	8,000	37,000	
		182	Poles & Overhead Conductors				29,000				
	04		WCC09A TRANSMISSION LINE					29,000	8,000	37,000	
		182	Poles & Overhead Conductors				29,000				
	05		WCC10B TRANSMISSION LINE					29,000	8,000	37,000	
		182	Poles & Overhead Conductors				29,000				
	06		WCC06D TRANSMISSION LINE					83,000	22,000	105,000	
		182	Poles & Overhead Conductors				83,000				
	07		WCC03B TRANSMISSION LINE					29,000	8,000	37,000	
		182	Poles & Overhead Conductors				29,000				
	08		WCC11D TRANSMISSION LINE					29,000	8,000	37,000	
		182	Poles & Overhead Conductors				29,000				

PROJECT COST ESTIMATE

PROJECT: Central Valley Project	PREPARED BY: Regional Office, Sacramento, CA
DIVISION: West San Joaquin Division	ESTIMATE DATE: July 2007 (Revised after DEC)
UNIT: San Luis Unit -- Drainage System -- Water Needs Alternative	ESTIMATE TYPE: Feasibility
FEATURE: Drainage Feature Re-Evaluation Feasibility Study	PRICE LEVEL: April 2006

PROPERTY CLASS	IDENTIFIED PROPERTY	PLANT ACCOUNT	DESCRIPTION	ORIGINAL FIELD COST	NEW INDEX	OLD INDEX	CURRENT FIELD COST	TOTAL FIELD COST	NONCONTRACT COST	CONSTRUCTION COST	TOTAL CONSTRUCTION COST
			NORTHERLY AREA (continued)								
13			TRANSMISSION LINES (continued)								
	09		WCC02A TRANSMISSION LINE					29,000	8,000	37,000	
		182	Poles & Overhead Conductors				29,000				
	10		WCC01C TRANSMISSION LINE					140,000	40,000	180,000	
		182	Poles & Overhead Conductors				140,000				
	11		FC5 a/b TRANSMISSION LINE					29,000	8,000	37,000	
		182	Poles & Overhead Conductors				29,000				
	12		PCC16D TRANSMISSION LINE					29,000	8,000	37,000	
		182	Poles & Overhead Conductors				29,000				
	13		PCC06D TRANSMISSION LINE					29,000	8,000	37,000	
		182	Poles & Overhead Conductors				29,000				
	14		PE-14 TRANSMISSION LINE					250,000	70,000	320,000	
		182	Poles & Overhead Conductors				250,000				
	15		NORTHERLY AREA TREATMENT PLANT TRANSMISSION LINE					29,000	8,000	37,000	
		182	Poles & Overhead Conductors				29,000				
15			GENERAL PROPERTY					2,420,000	680,000	3,100,000	3,100,000
	01		SCADA ELECTRICAL & CONTROL EQUIPMENT					2,420,000	680,000	3,100,000	
		100	Land and Rights								
		180	Installed Supervisory Control and Communications Equipment				2,420,000				

PROJECT COST ESTIMATE

PROJECT: Central Valley Project	PREPARED BY: Regional Office, Sacramento, CA
DIVISION: West San Joaquin Division	ESTIMATE DATE: July 2007 (Revised after DEC)
UNIT: San Luis Unit -- Drainage System -- Water Needs Alternative	ESTIMATE TYPE: Feasibility
FEATURE: Drainage Feature Re-Evaluation Feasibility Study	PRICE LEVEL: April 2006

PROPERTY CLASS	IDENTIFIED PROPERTY	PLANT ACCOUNT	DESCRIPTION	ORIGINAL FIELD COST	NEW INDEX	OLD INDEX	CURRENT FIELD COST	TOTAL FIELD COST	NONCONTRACT COST	CONSTRUCTION COST	TOTAL CONSTRUCTION COST
			WESTLANDS WATER DISTRICT - PROJECT COST					816,945,500	222,020,500	1,038,966,000	1,038,966,000
			WWD SOUTH - PROJECT COST					276,605,500	77,921,500	354,527,000	354,527,000
03			PUMPING PLANTS					4,208,500	1,141,500	5,350,000	5,350,000
	01		PUMPING PLANT A					1,584,500	415,500	2,000,000	
		100	Land and Rights								
		130	Structures and Improvements				620,000				
		152	Waterways				77,000				
		153	Waterways Structures				314,500				
		154	Waterways Protective Works				120,000				
		160	Pumps and Prime Movers				260,000				
		170	Accessory Electrical Equipment				105,000				
		175	Station Equipment				88,000				
	02		PUMPING PLANT B					1,218,500	331,500	1,550,000	
		100	Land and Rights								
		130	Structures and Improvements				620,000				
		152	Waterways				58,000				
		153	Waterways Structures				14,500				
		154	Waterways Protective Works				120,000				
		160	Pumps and Prime Movers				260,000				
		170	Accessory Electrical Equipment				58,000				
		175	Station Equipment				88,000				
	03		PUMPING PLANT C					1,405,500	394,500	1,800,000	
		100	Land and Rights								
		130	Structures and Improvements				640,000				
		152	Waterways				63,000				
		153	Waterways Structures				14,500				
		154	Waterways Protective Works				200,000				
		160	Pumps and Prime Movers				310,000				
		170	Accessory Electrical Equipment				68,000				
		175	Station Equipment				110,000				

PROJECT COST ESTIMATE

PROJECT: Central Valley Project	PREPARED BY: Regional Office, Sacramento, CA
DIVISION: West San Joaquin Division	ESTIMATE DATE: July 2007 (Revised after DEC)
UNIT: San Luis Unit -- Drainage System -- Water Needs Alternative	ESTIMATE TYPE: Feasibility
FEATURE: Drainage Feature Re-Evaluation Feasibility Study	PRICE LEVEL: April 2006

PROPERTY CLASS	IDENTIFIED PROPERTY	PLANT ACCOUNT	DESCRIPTION	ORIGINAL FIELD COST	NEW INDEX	OLD INDEX	CURRENT FIELD COST	TOTAL FIELD COST	NONCONTRACT COST	CONSTRUCTION COST	TOTAL CONSTRUCTION COST
			WWD SOUTH (continued)								
07			DRAINS					77,540,000	20,660,000	98,200,000	98,200,000
	01		COLLECTION SYSTEM - Serving Reuse Area A					9,810,000	2,690,000	12,500,000	
		100	Land and Rights				410,000				
		152	Waterways				6,000,000				
		153	Waterway Structures				3,400,000				
	02		COLLECTION SYSTEM - Serving Reuse Area B					19,890,000	5,110,000	25,000,000	
		100	Land and Rights				690,000				
		152	Waterways				15,500,000				
		153	Waterway Structures				3,700,000				
	03		COLLECTION SYSTEM - Serving Reuse Area C					44,150,000	11,850,000	56,000,000	
		100	Land and Rights				1,150,000				
		152	Waterways				32,000,000				
		153	Waterway Structures				11,000,000				
	04		SOUTH DRAINAGE CONVEYANCE SYSTEM					3,690,000	1,010,000	4,700,000	
		100	Land and Rights				270,000				
		152	Waterways				2,900,000				
		153	Waterway Structures				520,000				
12			SPECIAL PLANTS					188,138,000	54,262,000	242,400,000	242,400,000
	01		WWD SOUTH - REUSE AREAS					29,600,000	8,400,000	38,000,000	
		100	Land and Rights				8,500,000				
		152	Waterways				21,100,000				
	02		RO TREATMENT PLANT					8,376,000	2,124,000	10,500,000	
		100	Land and Rights				16,000				
		130	Structure and Improvements				5,100,000				
		152	Waterways				1,600,000				
		160	Pumps and Prime Movers				580,000				
		170	Accessory Electrical				430,000				
		180	Installed Supervisory Control System				650,000				

PROJECT COST ESTIMATE

PROJECT: Central Valley Project	PREPARED BY: Regional Office, Sacramento, CA
DIVISION: West San Joaquin Division	ESTIMATE DATE: July 2007 (Revised after DEC)
UNIT: San Luis Unit -- Drainage System -- Water Needs Alternative	ESTIMATE TYPE: Feasibility
FEATURE: Drainage Feature Re-Evaluation Feasibility Study	PRICE LEVEL: April 2006

PROPERTY CLASS	IDENTIFIED PROPERTY	PLANT ACCOUNT	DESCRIPTION	ORIGINAL FIELD COST	NEW INDEX	OLD INDEX	CURRENT FIELD COST	TOTAL FIELD COST	NONCONTRACT COST	CONSTRUCTION COST	TOTAL CONSTRUCTION COST
			WWD SOUTH (continued)								
12			SPECIAL PLANTS (continued)								
	03		WWD SOUTH Se BIOTREATMENT PLANT					31,180,000	8,820,000	40,000,000	
		100	Land and Rights				10,000				
		130	Structures and Improvements				17,840,000				
		152	Waterways				10,920,000				
		160	Pumps and Prime Movers				1,150,000				
		170	Accessory Electrical Equipment				430,000				
		180	Installed Supervisory Control Equipment				830,000				
	04		WWD SOUTH - EVAPORATION PONDS					111,192,000	32,808,000	144,000,000	
			(1) INITIAL POND CONSTRUCTION					80,892,000	24,108,000	105,000,000	
		100	Land and Rights				1,650,000				
		130	Structures and Improvements				4,700,000				
		150	Reservoirs				25,000,000				
		152	Waterways				46,000,000				
		153	Waterway Structures				3,500,000				
		199	Miscellaneous Installed Equipment				42,000				
			(2) FUTURE ADDITIONAL TERMINAL CELL - 12.5 YEARS LATER					10,100,000	2,900,000	13,000,000	
		100	Land and Rights								
		130	Structures and Improvements				300,000				
		150	Reservoirs				4,800,000				
		152	Waterways				5,000,000				
			(3) FUTURE ADDITIONAL TERMINAL CELL - 25 YEARS LATER					10,100,000	2,900,000	13,000,000	
		100	Land and Rights								
		130	Structures and Improvements				300,000				
		150	Reservoirs				4,800,000				
		152	Waterways				5,000,000				

PROJECT COST ESTIMATE

PROJECT: Central Valley Project	PREPARED BY: Regional Office, Sacramento, CA
DIVISION: West San Joaquin Division	ESTIMATE DATE: July 2007 (Revised after DEC)
UNIT: San Luis Unit -- Drainage System -- Water Needs Alternative	ESTIMATE TYPE: Feasibility
FEATURE: Drainage Feature Re-Evaluation Feasibility Study	PRICE LEVEL: April 2006

PROPERTY CLASS	IDENTIFIED PROPERTY	PLANT ACCOUNT	DESCRIPTION	ORIGINAL FIELD COST	NEW INDEX	OLD INDEX	CURRENT FIELD COST	TOTAL FIELD COST	NONCONTRACT COST	CONSTRUCTION COST	TOTAL CONSTRUCTION COST
			WWD SOUTH (continued)								
12			SPECIAL PLANTS (continued)								
	04		WWD SOUTH - EVAPORATION PONDS (continued)								
			(4) FUTURE ADDITIONAL TERMINAL CELL - 37.5 YEARS LATER					10,100,000	2,900,000	13,000,000	
		100	Land and Rights								
		130	Structures and Improvements				300,000				
		150	Reservoirs				4,800,000				
		152	Waterways				5,000,000				
	05		WWD SOUTH - MITIGATION					7,790,000	2,110,000	9,900,000	
			(1) ALTERNATIVE HABITAT				2,914,138				
			(2) COMPENSATION HABITAT - SHALLOW				168,851				
			(3) COMPENSATION HABITAT - DEEP				2,299,050				
			(4) APPURTENANT FACILITIES				1,838,444				
			Rounding				(20,483)				
		100	Land and Rights				590,000				
13			TRANSMISSION LINES					609,000	168,000	777,000	777,000
	01		REUSE AREA A TRANSMISSION LINE					140,000	40,000	180,000	
		182	Poles & Overhead Conductors				140,000				
	02		REUSE AREA B TRANSMISSION LINE					29,000	8,000	37,000	
		182	Poles & Overhead Conductors				29,000				
	03		REUSE AREA C TRANSMISSION LINE					250,000	70,000	320,000	
		182	Poles & Overhead Conductors				250,000				
	04		WWD SOUTH TREATMENT PLANT TRANSMISSION LINE					190,000	50,000	240,000	
		182	Poles & Overhead Conductors				190,000				

PROJECT COST ESTIMATE

PROJECT: Central Valley Project	PREPARED BY: Regional Office, Sacramento, CA
DIVISION: West San Joaquin Division	ESTIMATE DATE: July 2007 (Revised after DEC)
UNIT: San Luis Unit -- Drainage System -- Water Needs Alternative	ESTIMATE TYPE: Feasibility
FEATURE: Drainage Feature Re-Evaluation Feasibility Study	PRICE LEVEL: April 2006

PROPERTY CLASS	IDENTIFIED PROPERTY	PLANT ACCOUNT	DESCRIPTION	ORIGINAL FIELD COST	NEW INDEX	OLD INDEX	CURRENT FIELD COST	TOTAL FIELD COST	NONCONTRACT COST	CONSTRUCTION COST	TOTAL CONSTRUCTION COST
			WWD SOUTH (continued)								
15			GENERAL PROPERTY					6,110,000	1,690,000	7,800,000	7,800,000
	01		SCADA ELECTRICAL & CONTROL EQUIPMENT					6,110,000	1,690,000	7,800,000	
		100	Land and Rights								
		180	Installed Supervisory Control and Communications Equipment				6,110,000				

PROJECT COST ESTIMATE

PROJECT: Central Valley Project	PREPARED BY: Regional Office, Sacramento, CA
DIVISION: West San Joaquin Division	ESTIMATE DATE: July 2007 (Revised after DEC)
UNIT: San Luis Unit -- Drainage System -- Water Needs Alternative	ESTIMATE TYPE: Feasibility
FEATURE: Drainage Feature Re-Evaluation Feasibility Study	PRICE LEVEL: April 2006

PROPERTY CLASS	IDENTIFIED PROPERTY	PLANT ACCOUNT	DESCRIPTION	ORIGINAL FIELD COST	NEW INDEX	OLD INDEX	CURRENT FIELD COST	TOTAL FIELD COST	NONCONTRACT COST	CONSTRUCTION COST	TOTAL CONSTRUCTION COST
			WWD CENTRAL - PROJECT COST					380,532,000	100,873,000	481,405,000	481,405,000
03			PUMPING PLANTS					6,625,000	1,775,000	8,400,000	8,400,000
	01		PUMPING PLANT D					1,766,500	433,500	2,200,000	
		100	Land and Rights								
		130	Structures and Improvements				630,000				
		152	Waterways				75,000				
		153	Waterways Structures				446,500				
		154	Waterways Protective Works				120,000				
		160	Pumps and Prime Movers				320,000				
		170	Accessory Electrical Equipment				65,000				
		175	Station Equipment				110,000				
	02		PUMPING PLANT E					1,385,500	364,500	1,750,000	
		100	Land and Rights								
		130	Structures and Improvements				640,000				
		152	Waterways				58,000				
		153	Waterways Structures				13,500				
		154	Waterways Protective Works				240,000				
		160	Pumps and Prime Movers				270,000				
		170	Accessory Electrical Equipment				54,000				
		175	Station Equipment				110,000				
	03		PUMPING PLANT F					1,043,500	306,500	1,350,000	
		100	Land and Rights								
		130	Structures and Improvements				590,000				
		152	Waterways				54,000				
		153	Waterways Structures				14,500				
		160	Pumps and Prime Movers				240,000				
		170	Accessory Electrical Equipment				57,000				
		175	Station Equipment				88,000				

PROJECT COST ESTIMATE

PROJECT: Central Valley Project	PREPARED BY: Regional Office, Sacramento, CA
DIVISION: West San Joaquin Division	ESTIMATE DATE: July 2007 (Revised after DEC)
UNIT: San Luis Unit -- Drainage System -- Water Needs Alternative	ESTIMATE TYPE: Feasibility
FEATURE: Drainage Feature Re-Evaluation Feasibility Study	PRICE LEVEL: April 2006

PROPERTY CLASS	IDENTIFIED PROPERTY	PLANT ACCOUNT	DESCRIPTION	ORIGINAL FIELD COST	NEW INDEX	OLD INDEX	CURRENT FIELD COST	TOTAL FIELD COST	NONCONTRACT COST	CONSTRUCTION COST	TOTAL CONSTRUCTION COST
			WWD CENTRAL (continued)								
03			PUMPING PLANTS (continued)								
	04		PUMPING PLANT G					1,131,500	318,500	1,450,000	
		100	Land and Rights								
		130	Structures and Improvements				620,000				
		152	Waterways				56,000				
		153	Waterways Structures				13,500				
		154	Waterways Protective Works				76,000				
		160	Pumps and Prime Movers				220,000				
		170	Accessory Electrical Equipment				58,000				
		175	Station Equipment				88,000				
	05		PUMPING PLANT H					1,298,000	352,000	1,650,000	
		100	Land and Rights								
		130	Structures and Improvements				620,000				
		152	Waterways				62,000				
		153	Waterways Structures				15,000				
		154	Waterways Protective Works				76,000				
		160	Pumps and Prime Movers				290,000				
		170	Accessory Electrical Equipment				125,000				
		175	Station Equipment				110,000				
07			DRAINS					127,210,000	34,290,000	161,500,000	161,500,000
	01		COLLECTION SYSTEM - Serving Reuse Area D					60,000,000	16,000,000	76,000,000	
		100	Land and Rights				1,500,000				
		152	Waterways				48,000,000				
		153	Waterway Structures				10,500,000				
	02		COLLECTION SYSTEM - Serving Reuse Area E					13,210,000	3,790,000	17,000,000	
		100	Land and Rights				610,000				
		152	Waterways				10,300,000				
		153	Waterway Structures				2,300,000				

PROJECT COST ESTIMATE

PROJECT: Central Valley Project	PREPARED BY: Regional Office, Sacramento, CA
DIVISION: West San Joaquin Division	ESTIMATE DATE: July 2007 (Revised after DEC)
UNIT: San Luis Unit -- Drainage System -- Water Needs Alternative	ESTIMATE TYPE: Feasibility
FEATURE: Drainage Feature Re-Evaluation Feasibility Study	PRICE LEVEL: April 2006

PROPERTY CLASS	IDENTIFIED PROPERTY	PLANT ACCOUNT	DESCRIPTION	ORIGINAL FIELD COST	NEW INDEX	OLD INDEX	CURRENT FIELD COST	TOTAL FIELD COST	NONCONTRACT COST	CONSTRUCTION COST	TOTAL CONSTRUCTION COST
			WWD CENTRAL (continued)								
07			DRAINS (continued)								
	03		COLLECTION SYSTEM - Serving Reuse Area F					3,060,000	840,000	3,900,000	
		100	Land and Rights				160,000				
		152	Waterways				2,200,000				
		153	Waterway Structures				700,000				
	04		COLLECTION SYSTEM - Serving Reuse Area G					14,470,000	4,030,000	18,500,000	
		100	Land and Rights				670,000				
		152	Waterways				11,000,000				
		153	Waterway Structures				2,800,000				
	05		COLLECTION SYSTEM - Serving Reuse Area H					23,770,000	6,230,000	30,000,000	
		100	Land and Rights				970,000				
		152	Waterways				18,500,000				
		153	Waterway Structures				4,300,000				
	06		CONVEYANCE SYSTEM 1					5,050,000	1,350,000	6,400,000	
		100	Land and Rights				250,000				
		152	Waterways				4,100,000				
		153	Waterway Structures				700,000				
	07		CONVEYANCE SYSTEM 2					7,650,000	2,050,000	9,700,000	
		100	Land and Rights				500,000				
		152	Waterways				5,600,000				
		153	Waterway Structures				1,550,000				
12			SPECIAL PLANTS					236,852,000	62,148,000	299,000,000	299,000,000
	01		WWD CENTRAL - REUSE AREAS					39,800,000	11,200,000	51,000,000	
		100	Land and Rights				12,500,000				
		152	Waterways				27,300,000				

PROJECT COST ESTIMATE

PROJECT: Central Valley Project	PREPARED BY: Regional Office, Sacramento, CA
DIVISION: West San Joaquin Division	ESTIMATE DATE: July 2007 (Revised after DEC)
UNIT: San Luis Unit -- Drainage System -- Water Needs Alternative	ESTIMATE TYPE: Feasibility
FEATURE: Drainage Feature Re-Evaluation Feasibility Study	PRICE LEVEL: April 2006

PROPERTY CLASS	IDENTIFIED PROPERTY	PLANT ACCOUNT	DESCRIPTION	ORIGINAL FIELD COST	NEW INDEX	OLD INDEX	CURRENT FIELD COST	TOTAL FIELD COST	NONCONTRACT COST	CONSTRUCTION COST	TOTAL CONSTRUCTION COST
			WWD CENTRAL (continued)								
12			SPECIAL PLANTS (continued)								
	02		RO TREATMENT PLANT					10,085,000	2,915,000	13,000,000	
		100	Land and Rights				15,000				
		130	Structures and Improvements				6,000,000				
		152	Waterways				2,100,000				
		160	Pumps and Prime Movers				730,000				
		170	Accessory Electrical				590,000				
		180	Installed Supervisory Control System				650,000				
	03		WWD CENTRAL Se BIOTREATMENT PLANT					31,175,000	8,825,000	40,000,000	
		100	Land and Rights				15,000				
		130	Structures and Improvements				17,830,000				
		152	Waterways				10,920,000				
		160	Pumps and Prime Movers				1,150,000				
		170	Accessory Electrical Equipment				430,000				
		180	Installed Supervisory Control Equipment				830,000				
	04		WWD CENTRAL - EVAPORATION PONDS					143,372,000	35,628,000	179,000,000	
			(1) INITIAL POND CONSTRUCTION					112,142,000	27,858,000	140,000,000	
		100	Land and Rights				2,600,000				
		130	Structures and Improvements				6,000,000				
		150	Reservoirs				31,000,000				
		152	Waterways				69,000,000				
		153	Waterway Structures				3,500,000				
		199	Miscellaneous Installed Equipment				42,000				
			(2) FUTURE ADDITIONAL TERMINAL CELL - 12.5 YEARS LATER					10,410,000	2,590,000	13,000,000	
		100	Land and Rights								
		130	Structures and Improvements				310,000				
		150	Reservoirs				4,800,000				
		152	Waterways				5,300,000				

PROJECT COST ESTIMATE

PROJECT: Central Valley Project	PREPARED BY: Regional Office, Sacramento, CA
DIVISION: West San Joaquin Division	ESTIMATE DATE: July 2007 (Revised after DEC)
UNIT: San Luis Unit -- Drainage System -- Water Needs Alternative	ESTIMATE TYPE: Feasibility
FEATURE: Drainage Feature Re-Evaluation Feasibility Study	PRICE LEVEL: April 2006

PROPERTY CLASS	IDENTIFIED PROPERTY	PLANT ACCOUNT	DESCRIPTION	ORIGINAL FIELD COST	NEW INDEX	OLD INDEX	CURRENT FIELD COST	TOTAL FIELD COST	NONCONTRACT COST	CONSTRUCTION COST	TOTAL CONSTRUCTION COST
			WWD CENTRAL (continued)								
12			SPECIAL PLANTS (continued)								
	04		WWD CENTRAL - EVAPORATION PONDS (continued)								
			(3) FUTURE ADDITIONAL TERMINAL CELL - 25 YEARS LATER					10,410,000	2,590,000	13,000,000	
		100	Land and Rights								
		130	Structures and Improvements				310,000				
		150	Reservoirs				4,800,000				
		152	Waterways				5,300,000				
			(4) FUTURE ADDITIONAL TERMINAL CELL - 37.5 YEARS LATER					10,410,000	2,590,000	13,000,000	
		100	Land and Rights								
		130	Structures and Improvements				310,000				
		150	Reservoirs				4,800,000				
		152	Waterways				5,300,000				
	05		WWD CENTRAL - MITIGATION					12,420,000	3,580,000	16,000,000	
			(1) ALTERNATIVE HABITAT				4,588,888				
			(2) COMPENSATION HABITAT - SHALLOW				265,670				
			(3) COMPENSATION HABITAT - DEEP				3,620,500				
			(4) APPURTENANT FACILITIES				2,894,925				
			Rounding				130,017				
		100	Land and Rights				920,000				

PROJECT COST ESTIMATE

PROJECT: Central Valley Project	PREPARED BY: Regional Office, Sacramento, CA
DIVISION: West San Joaquin Division	ESTIMATE DATE: July 2007 (Revised after DEC)
UNIT: San Luis Unit -- Drainage System -- Water Needs Alternative	ESTIMATE TYPE: Feasibility
FEATURE: Drainage Feature Re-Evaluation Feasibility Study	PRICE LEVEL: April 2006

PROPERTY CLASS	IDENTIFIED PROPERTY	PLANT ACCOUNT	DESCRIPTION	ORIGINAL FIELD COST	NEW INDEX	OLD INDEX	CURRENT FIELD COST	TOTAL FIELD COST	NONCONTRACT COST	CONSTRUCTION COST	TOTAL CONSTRUCTION COST
			WWD CENTRAL (continued)								
13			TRANSMISSION LINES					395,000	110,000	505,000	505,000
	01		REUSE AREA D TRANSMISSION LINE					29,000	8,000	37,000	
		182	Poles & Overhead Conductors				29,000				
	02		REUSE AREA E TRANSMISSION LINE					29,000	8,000	37,000	
		182	Poles & Overhead Conductors				29,000				
	03		REUSE AREA F TRANSMISSION LINE					250,000	70,000	320,000	
		182	Poles & Overhead Conductors				250,000				
	04		REUSE AREA G TRANSMISSION LINE					29,000	8,000	37,000	
		182	Poles & Overhead Conductors				29,000				
	05		REUSE AREA H TRANSMISSION LINE					29,000	8,000	37,000	
		182	Poles & Overhead Conductors				29,000				
	06		WWD CENTRAL TREATMENT PLANT TRANSMISSION LINE					29,000	8,000	37,000	
		182	Poles & Overhead Conductors				29,000				
15			GENERAL PROPERTY					9,450,000	2,550,000	12,000,000	12,000,000
	01		SCADA ELECTRICAL & CONTROL EQUIPMENT					9,450,000	2,550,000	12,000,000	
		100	Land and Rights								
		180	Installed Supervisory Control and Communications Equipment				9,450,000				

PROJECT COST ESTIMATE

PROJECT: Central Valley Project	PREPARED BY: Regional Office, Sacramento, CA
DIVISION: West San Joaquin Division	ESTIMATE DATE: July 2007 (Revised after DEC)
UNIT: San Luis Unit -- Drainage System -- Water Needs Alternative	ESTIMATE TYPE: Feasibility
FEATURE: Drainage Feature Re-Evaluation Feasibility Study	PRICE LEVEL: April 2006

PROPERTY CLASS	IDENTIFIED PROPERTY	PLANT ACCOUNT	DESCRIPTION	ORIGINAL FIELD COST	NEW INDEX	OLD INDEX	CURRENT FIELD COST	TOTAL FIELD COST	NONCONTRACT COST	CONSTRUCTION COST	TOTAL CONSTRUCTION COST
			WWD NORTH - PROJECT COST					159,808,000	43,226,000	203,034,000	203,034,000
03			PUMPING PLANTS					3,562,000	938,000	4,500,000	4,500,000
	01		PUMPING PLANT M					1,358,000	342,000	1,700,000	
		100	Land and Rights								
		130	Structures and Improvements				610,000				
		152	Waterways				53,000				
		153	Waterways Structures				203,000				
		154	Waterways Protective Works				76,000				
		160	Pumps and Prime Movers				270,000				
		170	Accessory Electrical Equipment				58,000				
		175	Station Equipment				88,000				
	02		PUMPING PLANT N					1,178,000	322,000	1,500,000	
		100	Land and Rights								
		130	Structures and Improvements				620,000				
		152	Waterways				49,000				
		153	Waterways Structures				13,000				
		154	Waterways Protective Works				120,000				
		160	Pumps and Prime Movers				230,000				
		170	Accessory Electrical Equipment				58,000				
		175	Station Equipment				88,000				

PROJECT COST ESTIMATE

PROJECT: Central Valley Project	PREPARED BY: Regional Office, Sacramento, CA
DIVISION: West San Joaquin Division	ESTIMATE DATE: July 2007 (Revised after DEC)
UNIT: San Luis Unit -- Drainage System -- Water Needs Alternative	ESTIMATE TYPE: Feasibility
FEATURE: Drainage Feature Re-Evaluation Feasibility Study	PRICE LEVEL: April 2006

PROPERTY CLASS	IDENTIFIED PROPERTY	PLANT ACCOUNT	DESCRIPTION	ORIGINAL FIELD COST	NEW INDEX	OLD INDEX	CURRENT FIELD COST	TOTAL FIELD COST	NONCONTRACT COST	CONSTRUCTION COST	TOTAL CONSTRUCTION COST
			WWD NORTH (continued)								
03			PUMPING PLANTS (continued)								
	03		PUMPING PLANT O					1,026,000	274,000	1,300,000	
		100	Land and Rights								
		130	Structures and Improvements				590,000				
		152	Waterways				47,000				
		153	Waterways Structures				13,000				
		160	Pumps and Prime Movers				230,000				
		170	Accessory Electrical Equipment				58,000				
		175	Station Equipment				88,000				
07			DRAINS					34,500,000	9,700,000	44,200,000	44,200,000
	01		COLLECTION SYSTEM - Serving Reuse Area M					16,930,000	5,070,000	22,000,000	
		100	Land and Rights				730,000				
		152	Waterways				12,500,000				
		153	Waterway Structures				3,700,000				
	02		COLLECTION SYSTEM - Serving Reuse Area N					4,410,000	1,190,000	5,600,000	
		100	Land and Rights				260,000				
		152	Waterways				3,000,000				
		153	Waterway Structures				1,150,000				
	03		COLLECTION SYSTEM - Serving Reuse Area O					9,110,000	2,390,000	11,500,000	
		100	Land and Rights				410,000				
		152	Waterways				6,500,000				
		153	Waterway Structures				2,200,000				
	04		CONVEYANCE SYSTEM					4,050,000	1,050,000	5,100,000	
		100	Land and Rights				250,000				
		152	Waterways				2,600,000				
		153	Waterway Structures				1,200,000				

PROJECT COST ESTIMATE

PROJECT: Central Valley Project	PREPARED BY: Regional Office, Sacramento, CA
DIVISION: West San Joaquin Division	ESTIMATE DATE: July 2007 (Revised after DEC)
UNIT: San Luis Unit -- Drainage System -- Water Needs Alternative	ESTIMATE TYPE: Feasibility
FEATURE: Drainage Feature Re-Evaluation Feasibility Study	PRICE LEVEL: April 2006

PROPERTY CLASS	IDENTIFIED PROPERTY	PLANT ACCOUNT	DESCRIPTION	ORIGINAL FIELD COST	NEW INDEX	OLD INDEX	CURRENT FIELD COST	TOTAL FIELD COST	NONCONTRACT COST	CONSTRUCTION COST	TOTAL CONSTRUCTION COST
			WWD NORTH (continued)								
12			SPECIAL PLANTS					118,038,000	31,562,000	149,600,000	149,600,000
	01		WWD NORTH - REUSE AREAS					14,950,000	4,050,000	19,000,000	
		100	Land and Rights				5,400,000				
		152	Waterways				9,550,000				
	02		RO TREATMENT PLANT					6,506,000	1,794,000	8,300,000	
		100	Land and Rights				16,000				
		130	Structure and Improvements				3,800,000				
		152	Waterways				1,350,000				
		160	Pumps and Prime Movers				400,000				
		170	Accessory Electrical				290,000				
		180	Installed Supervisory Control System				650,000				
	03		WWD NORTH Se BIOTREATMENT PLANT					21,190,000	5,810,000	27,000,000	
		100	Land and Rights				10,000				
		130	Structures and Improvements				13,450,000				
		152	Waterways				5,730,000				
		160	Pumps and Prime Movers				900,000				
		170	Accessory Electrical Equipment				400,000				
		180	Installed Supervisory Control Equipment				700,000				
	04		WWD NORTH - EVAPORATION PONDS					71,182,000	18,818,000	90,000,000	
			(1) INITIAL POND CONSTRUCTION					54,592,000	14,408,000	69,000,000	
		100	Land and Rights				1,050,000				
		130	Structures and Improvements				3,700,000				
		150	Reservoirs				10,500,000				
		152	Waterways				35,000,000				
		153	Waterway Structures				4,300,000				
		199	Miscellaneous Installed Equipment				42,000				

PROJECT COST ESTIMATE

PROJECT: Central Valley Project	PREPARED BY: Regional Office, Sacramento, CA
DIVISION: West San Joaquin Division	ESTIMATE DATE: July 2007 (Revised after DEC)
UNIT: San Luis Unit -- Drainage System -- Water Needs Alternative	ESTIMATE TYPE: Feasibility
FEATURE: Drainage Feature Re-Evaluation Feasibility Study	PRICE LEVEL: April 2006

PROPERTY CLASS	IDENTIFIED PROPERTY	PLANT ACCOUNT	DESCRIPTION	ORIGINAL FIELD COST	NEW INDEX	OLD INDEX	CURRENT FIELD COST	TOTAL FIELD COST	NONCONTRACT COST	CONSTRUCTION COST	TOTAL CONSTRUCTION COST
			WWD NORTH (continued)								
12			SPECIAL PLANTS (continued)								
	04		WWD NORTH - EVAPORATION PONDS (continued)								
			(2) FUTURE ADDITIONAL TERMINAL CELL - 12.5 YEARS LATER					5,530,000	1,470,000	7,000,000	
		100	Land and Rights								
		130	Structures and Improvements				230,000				
		150	Reservoirs				1,600,000				
		152	Waterways				3,700,000				
			(3) FUTURE ADDITIONAL TERMINAL CELL - 25 YEARS LATER					5,530,000	1,470,000	7,000,000	
		100	Land and Rights								
		130	Structures and Improvements				230,000				
		150	Reservoirs				1,600,000				
		152	Waterways				3,700,000				
			(4) FUTURE ADDITIONAL TERMINAL CELL - 37.5 YEARS LATER					5,530,000	1,470,000	7,000,000	
		100	Land and Rights								
		130	Structures and Improvements				230,000				
		150	Reservoirs				1,600,000				
		152	Waterways				3,700,000				
	05		WWD NORTH - MITIGATION					4,210,000	1,090,000	5,300,000	
			(1) ALTERNATIVE HABITAT				1,559,475				
			(2) COMPENSATION HABITAT - SHALLOW				90,404				
			(3) COMPENSATION HABITAT - DEEP				1,230,450				
			(4) APPURTENANT FACILITIES				983,881				
			Rounding				35,790				
		100	Land and Rights				310,000				

PROJECT COST ESTIMATE

PROJECT: Central Valley Project	PREPARED BY: Regional Office, Sacramento, CA
DIVISION: West San Joaquin Division	ESTIMATE DATE: July 2007 (Revised after DEC)
UNIT: San Luis Unit -- Drainage System -- Water Needs Alternative	ESTIMATE TYPE: Feasibility
FEATURE: Drainage Feature Re-Evaluation Feasibility Study	PRICE LEVEL: April 2006

PROPERTY CLASS	IDENTIFIED PROPERTY	PLANT ACCOUNT	DESCRIPTION	ORIGINAL FIELD COST	NEW INDEX	OLD INDEX	CURRENT FIELD COST	TOTAL FIELD COST	NONCONTRACT COST	CONSTRUCTION COST	TOTAL CONSTRUCTION COST
			WWD NORTH (continued)								
13			TRANSMISSION LINES					338,000	96,000	434,000	434,000
	01		REUSE AREA M TRANSMISSION LINE					29,000	8,000	37,000	
		182	Poles & Overhead Conductors				29,000				
	02		REUSE AREA N TRANSMISSION LINE					29,000	8,000	37,000	
		182	Poles & Overhead Conductors				29,000				
	03		REUSE AREA O TRANSMISSION LINE					140,000	40,000	180,000	
		182	Poles & Overhead Conductors				140,000				
	04		WWD NORTH TREATMENT PLANT TRANSMISSION LINE					140,000	40,000	180,000	
		182	Poles & Overhead Conductors				140,000				
15			GENERAL PROPERTY					3,370,000	930,000	4,300,000	4,300,000
	01		SCADA ELECTRICAL & CONTROL EQUIPMENT					3,370,000	930,000	4,300,000	
		100	Land and Rights								
		180	Installed Supervisory Control and Communications Equipment				3,370,000				

CONSTRUCTION COST ESTIMATE

PROJECT: Central Valley Project	PREPARED BY: Regional Office, Sacramento, CA
DIVISION: West San Joaquin Division	ESTIMATE DATE: July 2007 (Revised after DEC)
UNIT: San Luis Unit -- Drainage System -- Land Retirement	ESTIMATE TYPE: Feasibility
FEATURE: Drainage Feature Re-Evaluation Feasibility Study	PRICE LEVEL: April 2006

PROPERTY CLASS	IDENTIFIED PROPERTY	PLANT ACCOUNT	ITEM	DESCRIPTION	QUANTITY	UNIT	PRICE	AMOUNT	FIELD COST	TOTAL FIELD COST	NONCONTRACT COST	CONSTRUCTION COST
				WATER NEEDS LAND RETIREMENT - TOTAL PROJECT COST						630,000,000	30,000,000	660,000,000
15				GENERAL PROPERTY						630,000,000	30,000,000	660,000,000
	01			RETIRED LAND - This represents land that will be retired under the water needs alternative.						630,000,000	30,000,000	660,000,000
		100		Land and Rights					630,000,000			
			1	Seasonal Crop Land - Fee	140,180	Ac	4,000.00	560,720,000				
			2	Permanent Crop Land - Fee		Ac	13,300.00					
			3	Mixed Built Land - Fee	444	Ac	15,000.00	6,660,000				
			4	Undeveloped - Fee	2,270	Ac	2,100.00	4,767,000				
			5	Unlisted Items (+/- 5%)				27,853,000				
				Subtotal				600,000,000				
				Contingencies (+/- 5%)				30,000,000				
				Field Cost - Land and Rights				630,000,000				
				NON CONTRACTS (+/- 5%)							30,000,000	

The CCEs for the Northerly Area can be found in the “CCE for Northerly Area” table under the Drainage-Impaired Area Land Retirement Alternative.

CONSTRUCTION COST ESTIMATE

PROJECT: Central Valley Project	PREPARED BY: Regional Office, Sacramento, CA
DIVISION: West San Joaquin Division	ESTIMATE DATE: July 2007 (Revised after DEC)
UNIT: San Luis Unit -- Drainage System -- Westlands Water District-North	ESTIMATE TYPE: Feasibility
FEATURE: Drainage Feature Re-Evaluation Feasibility Study	PRICE LEVEL: April 2006

PROPERTY CLASS	IDENTIFIED PROPERTY	PLANT ACCOUNT	ITEM	DESCRIPTION	QUANTITY	UNIT	PRICE	AMOUNT	FIELD COST	TOTAL FIELD COST	NONCONTRACT COST	CONSTRUCTION COST
				WWD NORTH - TOTAL PROJECT COST						159,808,000	43,226,000	203,034,000
03				PUMPING PLANTS						3,562,000	938,000	4,500,000
	01			PUMPING PLANT M - This pumping plant is located next to Reuse						1,358,000	342,000	1,700,000
				Area M. This consists of one "Canned" unit. The plant is rated at								
				10 hp; Q = 361 GPM; TDH = 76 ft.								
		100		Land and Rights								
				Costs of Land and Rights have been included with Reuse Area M.								
		130		Structures and Improvements					610,000			
			1	Excavation, common	739	cy	15.00	11,085				
			2	Backfill, common	646	cy	10.00	6,460				
			3	Compacted backfill, common	646	cy	10.00	6,460				
			4	Excavation, braced trench	22	cy	500.00	11,000				
			5	Backfill, braced trench	18	cy	450.00	8,100				
			6	Compacted backfill, braced trench	18	cy	300.00	5,400				
			7	Gravel surfacing	78	cy	65.00	5,070				
			8	Unwatering/dewatering, 7' depth (2 month duration)	1	ls	250,000.00	250,000				
			9	Concrete	37	cy	1,000.00	37,000				
			10	Furnishing and handling cement	10	ton	170.00	1,700				
			11	Furnishing and placing reinforcement	5,220	lb	1.75	9,135				
			12	Chain link fencing	273	lf	30.00	8,190				
			13	CMU Wall (8' high, 15 lf long)	120	sf	100.00	12,000				
			14	Structural Steel - Sunshades (20' x 26'; 10,300 lbs)	1	ea	30,000.00	30,000				
			15	Mobilization (+/- 5%)				20,080				
			16	Unlisted Items (+/- 15%)				63,252				
			17	Allowance for Procurement Strategies (+/- 5%)				25,068				
				Subtotal				510,000				
				Contingencies (+/- 20%)				100,000				
				Field Cost - Structures and Improvements				610,000				

CONSTRUCTION COST ESTIMATE

PROJECT: Central Valley Project	PREPARED BY: Regional Office, Sacramento, CA
DIVISION: West San Joaquin Division	ESTIMATE DATE: July 2007 (Revised after DEC)
UNIT: San Luis Unit -- Drainage System -- Westlands Water District-North	ESTIMATE TYPE: Feasibility
FEATURE: Drainage Feature Re-Evaluation Feasibility Study	PRICE LEVEL: April 2006

PROPERTY CLASS	IDENTIFIED PROPERTY	PLANT ACCOUNT	ITEM	DESCRIPTION	QUANTITY	UNIT	PRICE	AMOUNT	FIELD COST	TOTAL FIELD COST	NONCONTRACT COST	CONSTRUCTION COST
03	01			PUMPING PLANT M (continued)								
		152		Waterways					53,000			
			1	Steel piping & flanges for manifold	1,474	lb	6.00	8,844				
			2	Motor Op. BFV; Class 150; D=6"; 245 lb/valve	1	ea	17,500.00	17,500				
			3	Tilt Disk Ck. Valve; Class 125; D=6"; 164 lb/valve	1	ea	7,500.00	7,500				
			4	Ball Valve for AV; D=1"; 2 lbs/valve	2	ea	170.00	340				
			5	Air Valves; D=1"; 35 lbs/valve	2	ea	300.00	600				
			6	Mobilization (+/- 5%)				1,739				
			7	Unlisted Items (+/- 15%)				5,478				
			8	Allowance for Procurement Strategies (+/- 5%)				1,998				
				Subtotal				44,000				
				Contingencies (+/- 20%)				9,000				
				Field Cost - Waterways				53,000				
		153		Waterways Structures					203,000			
				(1) Flow Meter								
			1	Pipe Flowmeter; D = 6"	1	ea	8,500.00	8,500				
			2	Mobilization (+/- 5%)				425				
			3	Unlisted Items (+/- 15%)				1,339				
			4	Allowance for Procurement Strategies (+/- 5%)				736				
				Subtotal				11,000				
				Contingencies (+/- 20%)				2,000				
				Field Cost - (1) Flow Meter				13,000				

CONSTRUCTION COST ESTIMATE

PROJECT: Central Valley Project	PREPARED BY: Regional Office, Sacramento, CA
DIVISION: West San Joaquin Division	ESTIMATE DATE: July 2007 (Revised after DEC)
UNIT: San Luis Unit -- Drainage System -- Westlands Water District-North	ESTIMATE TYPE: Feasibility
FEATURE: Drainage Feature Re-Evaluation Feasibility Study	PRICE LEVEL: April 2006

PROPERTY CLASS	IDENTIFIED PROPERTY	PLANT ACCOUNT	ITEM	DESCRIPTION	QUANTITY	UNIT	PRICE	AMOUNT	FIELD COST	TOTAL FIELD COST	NONCONTRACT COST	CONSTRUCTION COST
03	01			PUMPING PLANT M (continued)								
		153		Waterways Structures (continued)								
				(2) Regulating Tank; D = 16 ft; H = 15 ft								
			1	Strip and Clear, 12" depth	130	cy	6.50	845				
			2	Compacting embankment	320	cy	15.00	4,800				
			3	Gravel surfacing	50	cy	65.00	3,250				
			4	Concrete	30	cy	1,000.00	30,000				
			5	Cement	10	ton	170.00	1,700				
			6	Reinforcement	4,000	lb	1.75	7,000				
			7	Chain link fence	220	lf	30.00	6,600				
			8	Precast Concrete Piles, 12" x 12" (reinforced, 60 ft deep)	5	ea	4,000.00	20,000				
			9	F&I Steel Regulating Tank; D=16 ft; H=15 ft; w/ roof	1	ea	50,000.00	50,000				
			10	Mobilization (+/- 5%)				6,210				
			11	Unlisted Items (+/- 15%)				19,561				
			12	Allowance for Procurement Strategies (+/- 5%)				5,035				
				Subtotal				155,000				
				Contingencies (+/- 20%)				35,000				
				Field Cost - (2) Regulating Tank				190,000				
				Field Cost - Waterway Structures				203,000				
		154		Waterways Protective Works					76,000			
			1	Air Chamber; D=6 ft.; cylindrical shaped; 7,100 lbs	1	ea	50,000.00	50,000				
			2	Mobilization (+/- 5%)				2,500				
			3	Unlisted Items (+/- 15%)				7,875				
			4	Allowance for Procurement Strategies (+/- 5%)				2,625				
				Subtotal				63,000				
				Contingencies (+/- 20%)				13,000				
				Field Cost - Waterways Protective Works				76,000				

CONSTRUCTION COST ESTIMATE

PROJECT: Central Valley Project	PREPARED BY: Regional Office, Sacramento, CA
DIVISION: West San Joaquin Division	ESTIMATE DATE: July 2007 (Revised after DEC)
UNIT: San Luis Unit -- Drainage System -- Westlands Water District-North	ESTIMATE TYPE: Feasibility
FEATURE: Drainage Feature Re-Evaluation Feasibility Study	PRICE LEVEL: April 2006

PROPERTY CLASS	IDENTIFIED PROPERTY	PLANT ACCOUNT	ITEM	DESCRIPTION	QUANTITY	UNIT	PRICE	AMOUNT	FIELD COST	TOTAL FIELD COST	NONCONTRACT COST	CONSTRUCTION COST
03	01			PUMPING PLANT M (continued)								
		160		Pumps and Prime Movers					270,000			
			1	Vertical Turbine Unit; 3-stg; 1760 rpm; Rated 361 gpm; TDH=76 ft.	2,380	lb	65.00	154,700				
				W/ vert Induction motor @ 10 hp; 1800 rpm; 3ph / 60 hz / 460 v								
			2	Flygt, 8" Std. CP-3152 submersible wastewater pump; 1750 rpm	800	lb	25.00	20,000				
				Q = 900 gpm; TDH = 42 ft.; w/ 20 hp submersible motor								
			3	Mobilization (+/- 5%)				8,735				
			4	Unlisted Items (+/- 15%)				27,515				
			5	Allowance for Procurement Strategies (+/- 5%)				9,050				
				Subtotal				220,000				
				Contingencies (+/- 20%)				50,000				
				Field Cost - Pumps and Prime Movers				270,000				
		170		Accessory Electrical Equipment					58,000			
			1	F&I PVC coated rigid steel conduit - 3/4 Inch	100	ft	15.00	1,500				
			2	F&I PVC coated rigid steel conduit - 2 Inch	50	ft	31.00	1,550				
			3	F&I single conductor - 12 AWG	400	ft	2.50	1,000				
			4	F&I single conductor - 1 AWG	200	ft	5.50	1,100				
			5	F&I grounding system - 4/0 bare copper	200	ft	12.00	2,400				
			6	F&I grounding system - 3/4" dia. 10 foot ground rod	8	ea	175.00	1,400				
			7	F&I Distribution Board w/ enclosure, trips, & A frames	1	ls	2,850.00	2,850				
			8	F&I transformer and load center, w/ enclosure, breakers, and	1	ea	4,000.00	4,000				
				7.5 KVA, single phase, 480V-240/120 V								
			9	F&I Control board for main pump, w/enclosure, relays, switches,	1	ls	10,000.00	10,000				
				fuse block, terminal block, & 10 hp motor starter	1	ea						
			10	F&I Control board for submersible wastewater pump	1	ls	10,000.00	10,000				
			11	Furnish and install 100 A, 480V, 3 Phase meter socket	1	ea	500.00	500				
			12	Furnish and install 100A, 600V, 3 Phase fused disconnect switch	1	ea	1,500.00	1,500				

CONSTRUCTION COST ESTIMATE

PROJECT: Central Valley Project	PREPARED BY: Regional Office, Sacramento, CA
DIVISION: West San Joaquin Division	ESTIMATE DATE: July 2007 (Revised after DEC)
UNIT: San Luis Unit -- Drainage System -- Westlands Water District-North	ESTIMATE TYPE: Feasibility
FEATURE: Drainage Feature Re-Evaluation Feasibility Study	PRICE LEVEL: April 2006

PROPERTY CLASS	IDENTIFIED PROPERTY	PLANT ACCOUNT	ITEM	DESCRIPTION	QUANTITY	UNIT	PRICE	AMOUNT	FIELD COST	TOTAL FIELD COST	NONCONTRACT COST	CONSTRUCTION COST
03	01			PUMPING PLANT M (continued)								
		170		Accessory Electrical Equipment (continued)								
			13	Mobilization (+/- 5%)				1,890				
			14	Unlisted Items (+/- 15%)				5,954				
			15	Allowance for Procurement Strategies (+/- 5%)				2,357				
				Subtotal				48,000				
				Contingencies (+/- 20%)				10,000				
				Field Cost - Accessory Electrical				58,000				
		175		Station Equipment					88,000			
			1	Oil filled, distribution power transformer, 45 kVA; 12.47kV-480V	1	ea	25,000.00	25,000				
			2	7.65-kV MCOV metal oxide distribution class arrester	3	ea	2,000.00	6,000				
			3	3-phase, 15-kV fused disconnect switch, 2E-5E	1	ea	25,000.00	25,000				
			4	50 foot wood pole for incoming line	1	ea	2,000.00	2,000				
			5	Mobilization (+/- 5%)				2,900				
			6	Unlisted Items (+/- 15%)				9,135				
			7	Allowance for Procurement Strategies (+/- 5%)				3,965				
				Subtotal				74,000				
				Contingencies (+/- 20%)				14,000				
				Field Cost - Station Equipment				88,000				
				FACILITATING SERVICES (2%)								
				INVESTIGATIONS (3%)								
				DESIGNS & SPECIFICATIONS (10%)								
				CONSTRUCTION SUPERVISION (12%)								
				OTHER COSTS (+/- 27%)							342,000	

CONSTRUCTION COST ESTIMATE

PROJECT: Central Valley Project	PREPARED BY: Regional Office, Sacramento, CA
DIVISION: West San Joaquin Division	ESTIMATE DATE: July 2007 (Revised after DEC)
UNIT: San Luis Unit -- Drainage System -- Westlands Water District-North	ESTIMATE TYPE: Feasibility
FEATURE: Drainage Feature Re-Evaluation Feasibility Study	PRICE LEVEL: April 2006

PROPERTY CLASS	IDENTIFIED PROPERTY	PLANT ACCOUNT	ITEM	DESCRIPTION	QUANTITY	UNIT	PRICE	AMOUNT	FIELD COST	TOTAL FIELD COST	NONCONTRACT COST	CONSTRUCTION COST
03	02			PUMPING PLANT N - This pumping plant is located next to Reuse						1,178,000	322,000	1,500,000
				Area N. This consists of one "Canned" unit. The plant is rated at								
				7.5 hp; Q = 135 GPM; TDH = 107 ft.								
		100		Land and Rights								
				Costs of Land and Rights have been included with Reuse Area N.								
		130		Structures and Improvements					620,000			
			1	Excavation, common	762	cy	15.00	11,430				
			2	Backfill, common	667	cy	10.00	6,670				
			3	Compacted backfill, common	667	cy	10.00	6,670				
			4	Excavation, braced trench	20	cy	500.00	10,000				
			5	Backfill, braced trench	16	cy	450.00	7,200				
			6	Compacted backfill, braced trench	16	cy	300.00	4,800				
			7	Gravel surfacing	81	cy	65.00	5,265				
			8	Unwatering/dewatering, 7' depth (2 month duration)	1	ls	250,000.00	250,000				
			9	Concrete	40	cy	1,000.00	40,000				
			10	Furnishing and handling cement	11	ton	170.00	1,870				
			11	Furnishing and placing reinforcement	5,720	lb	1.75	10,010				
			12	Chain link fencing	279	lf	30.00	8,370				
			13	CMU Wall (8' high, 15 lf long)	120	sf	100.00	12,000				
			14	Structural Steel - Sunshades (20' x 26'; 10,300 lbs)	1	ea	30,000.00	30,000				
			15	Mobilization (+/- 5%)				20,214				
			16	Unlisted Items (+/- 15%)				63,675				
			17	Allowance for Procurement Strategies (+/- 5%)				21,826				
				Subtotal				510,000				
				Contingencies (+/- 20%)				110,000				
				Field Cost - Structures and Improvements				620,000				

CONSTRUCTION COST ESTIMATE

PROJECT: Central Valley Project	PREPARED BY: Regional Office, Sacramento, CA
DIVISION: West San Joaquin Division	ESTIMATE DATE: July 2007 (Revised after DEC)
UNIT: San Luis Unit -- Drainage System -- Westlands Water District-North	ESTIMATE TYPE: Feasibility
FEATURE: Drainage Feature Re-Evaluation Feasibility Study	PRICE LEVEL: April 2006

PROPERTY CLASS	IDENTIFIED PROPERTY	PLANT ACCOUNT	ITEM	DESCRIPTION	QUANTITY	UNIT	PRICE	AMOUNT	FIELD COST	TOTAL FIELD COST	NONCONTRACT COST	CONSTRUCTION COST
03	02			PUMPING PLANT N (continued)								
		152		Waterways					49,000			
			1	Steel piping & flanges for manifold	1,338	lb	6.00	8,028				
			2	Motor Op. BFV; Class 150; D=6"; 226 lb/valve	1	ea	16,250.00	16,250				
			3	Tilt Disk Ck. Valve; Class 125; D=6"; 82 lb/valve	1	ea	7,000.00	7,000				
			4	Ball Valve for AV; D=1"; 2 lbs/valve	2	ea	170.00	340				
			5	Air Valves; D=1"; 35 lbs/valve	2	ea	300.00	600				
			6	Mobilization (+/- 5%)				1,611				
			7	Unlisted Items (+/- 15%)				5,074				
			8	Allowance for Procurement Strategies (+/- 5%)				2,097				
				Subtotal				41,000				
				Contingencies (+/- 20%)				8,000				
				Field Cost - Waterways				49,000				
		153		Waterways Structures					13,000			
			1	Pipe Flowmeter; D = 6"	1	ea	8,500.00	8,500				
			2	Mobilization (+/- 5%)				425				
			3	Unlisted Items (+/- 15%)				1,339				
			4	Allowance for Procurement Strategies (+/- 5%)				736				
				Subtotal				11,000				
				Contingencies (+/- 20%)				2,000				
				Field Cost - Waterways Structures				13,000				

CONSTRUCTION COST ESTIMATE

PROJECT: Central Valley Project	PREPARED BY: Regional Office, Sacramento, CA
DIVISION: West San Joaquin Division	ESTIMATE DATE: July 2007 (Revised after DEC)
UNIT: San Luis Unit -- Drainage System -- Westlands Water District-North	ESTIMATE TYPE: Feasibility
FEATURE: Drainage Feature Re-Evaluation Feasibility Study	PRICE LEVEL: April 2006

PROPERTY CLASS	IDENTIFIED PROPERTY	PLANT ACCOUNT	ITEM	DESCRIPTION	QUANTITY	UNIT	PRICE	AMOUNT	FIELD COST	TOTAL FIELD COST	NONCONTRACT COST	CONSTRUCTION COST
03	02			PUMPING PLANT N (continued)								
		154		Waterways Protective Works					120,000			
			1	Air Chamber; D=6 ft.; cylindrical shaped; 7,100 lbs	1	ea	80,000.00	80,000				
			2	Mobilization (+/- 5%)				4,000				
			3	Unlisted Items (+/- 15%)				12,600				
			4	Allowance for Procurement Strategies (+/- 5%)				3,400				
				Subtotal				100,000				
				Contingencies (+/- 20%)				20,000				
				Field Cost - Waterways Protective Works				120,000				
		160		Pumps and Prime Movers					230,000			
			1	Vertical Turbine Unit; 2-stg; 3500 rpm; Rated 135 gpm; TDH=107 ft.	1,460	lb	90.00	131,400				
				W/ vert Induction motor @ 10 hp; 3600 rpm; 3ph / 60 hz / 460 v								
			2	Flygt, 8" Std. CP-3152 submersible wastewater pump; 1750 rpm	800	lb	25.00	20,000				
				Q = 900 gpm; TDH = 42 ft.; w/ 20 hp submersible motor								
			3	Mobilization (+/- 5%)				7,570				
			4	Unlisted Items (+/- 15%)				23,846				
			5	Allowance for Procurement Strategies (+/- 5%)				7,185				
				Subtotal				190,000				
				Contingencies (+/- 20%)				40,000				
				Field Cost - Pumps and Prime Movers				230,000				

CONSTRUCTION COST ESTIMATE

PROJECT: Central Valley Project	PREPARED BY: Regional Office, Sacramento, CA
DIVISION: West San Joaquin Division	ESTIMATE DATE: July 2007 (Revised after DEC)
UNIT: San Luis Unit -- Drainage System -- Westlands Water District-North	ESTIMATE TYPE: Feasibility
FEATURE: Drainage Feature Re-Evaluation Feasibility Study	PRICE LEVEL: April 2006

PROPERTY CLASS	IDENTIFIED PROPERTY	PLANT ACCOUNT	ITEM	DESCRIPTION	QUANTITY	UNIT	PRICE	AMOUNT	FIELD COST	TOTAL FIELD COST	NONCONTRACT COST	CONSTRUCTION COST
03	02			PUMPING PLANT N (continued)								
		170		Accessory Electrical Equipment					58,000			
			1	F&I PVC coated rigid steel conduit - 3/4 Inch	100	ft	15.00	1,500				
			2	F&I PVC coated rigid steel conduit - 2 Inch	50	ft	31.00	1,550				
			3	F&I single conductor - 12 AWG	400	ft	2.50	1,000				
			4	F&I single conductor - 1 AWG	200	ft	5.50	1,100				
			5	F&I grounding system - 4/0 bare copper	200	ft	12.00	2,400				
			6	F&I grounding system - 3/4" dia. 10 foot ground rod	8	ea	175.00	1,400				
			7	F&I Distribution Board w/ enclosure, trips, & A frames	1	ls	2,850.00	2,850				
			8	F&I transformer and load center, w/ enclosure, breakers, and	1	ea	4,000.00	4,000				
				7.5 KVA, single phase, 480V-240/120 V								
			9	F&I Control board for main pump, w/enclosure, relays, switches,	1	ls	10,000.00	10,000				
				fuse block, terminal block, & 10 hp motor starter	1	ea						
			10	F&I Control board for submersible wastewater pump	1	ls	10,000.00	10,000				
			11	Furnish and install 100 A, 480V, 3 Phase meter socket	1	ea	500.00	500				
			12	Furnish and install 100A, 600V, 3 Phase fused disconnect switch	1	ea	1,500.00	1,500				
			13	Mobilization (+/- 5%)				1,890				
			14	Unlisted Items (+/- 15%)				5,954				
			15	Allowance for Procurement Strategies (+/- 5%)				2,357				
				Subtotal				48,000				
				Contingencies (+/- 20%)				10,000				
				Field Cost - Accessory Electrical				58,000				

CONSTRUCTION COST ESTIMATE

PROJECT: Central Valley Project	PREPARED BY: Regional Office, Sacramento, CA
DIVISION: West San Joaquin Division	ESTIMATE DATE: July 2007 (Revised after DEC)
UNIT: San Luis Unit -- Drainage System -- Westlands Water District-North	ESTIMATE TYPE: Feasibility
FEATURE: Drainage Feature Re-Evaluation Feasibility Study	PRICE LEVEL: April 2006

PROPERTY CLASS	IDENTIFIED PROPERTY	PLANT ACCOUNT	ITEM	DESCRIPTION	QUANTITY	UNIT	PRICE	AMOUNT	FIELD COST	TOTAL FIELD COST	NONCONTRACT COST	CONSTRUCTION COST
03	02			PUMPING PLANT N (continued)								
		175		Station Equipment					88,000			
			1	Oil filled, distribution power transformer, 45 kVA; 12.47kV-480V	1	ea	25,000.00	25,000				
			2	7.65-kV MCOV metal oxide distribution class arrester	3	ea	2,000.00	6,000				
			3	3-phase, 15-kV fused disconnect switch, 2E-5E	1	ea	25,000.00	25,000				
			4	50 foot wood pole for incoming line	1	ea	2,000.00	2,000				
			5	Mobilization (+/- 5%)				2,900				
			6	Unlisted Items (+/- 15%)				9,135				
			7	Allowance for Procurement Strategies (+/- 5%)				3,965				
				Subtotal				74,000				
				Contingencies (+/- 20%)				14,000				
				Field Cost - Station Equipment				88,000				
				FACILITATING SERVICES (2%)								
				INVESTIGATIONS (3%)								
				DESIGNS & SPECIFICATIONS (10%)								
				CONSTRUCTION SUPERVISION (12%)								
				OTHER COSTS (+/- 27%)							322,000	

CONSTRUCTION COST ESTIMATE

PROJECT: Central Valley Project	PREPARED BY: Regional Office, Sacramento, CA
DIVISION: West San Joaquin Division	ESTIMATE DATE: July 2007 (Revised after DEC)
UNIT: San Luis Unit -- Drainage System -- Westlands Water District-North	ESTIMATE TYPE: Feasibility
FEATURE: Drainage Feature Re-Evaluation Feasibility Study	PRICE LEVEL: April 2006

PROPERTY CLASS	IDENTIFIED PROPERTY	PLANT ACCOUNT	ITEM	DESCRIPTION	QUANTITY	UNIT	PRICE	AMOUNT	FIELD COST	TOTAL FIELD COST	NONCONTRACT COST	CONSTRUCTION COST
03	03			PUMPING PLANT O - This pumping plant is located next to Reuse						1,026,000	274,000	1,300,000
				Area O. This consists of one "Canned" unit. The plant is rated at								
				10 hp; Q = 202 GPM; TDH = 123 ft.								
		100		Land and Rights								
				Costs of Land and Rights have been included with Reuse Area O.								
		130		Structures and Improvements					590,000			
			1	Excavation, common	691	cy	15.00	10,365				
			2	Backfill, common	603	cy	10.00	6,030				
			3	Compacted backfill, common	603	cy	10.00	6,030				
			4	Excavation, braced trench	20	cy	500.00	10,000				
			5	Backfill, braced trench	16	cy	450.00	7,200				
			6	Compacted backfill, braced trench	16	cy	300.00	4,800				
			7	Gravel surfacing	70	cy	65.00	4,550				
			8	Unwatering/dewatering, 7' depth (2 month duration)	1	ls	250,000.00	250,000				
			9	Concrete	31	cy	1,000.00	31,000				
			10	Furnishing and handling cement	9	ton	170.00	1,530				
			11	Furnishing and placing reinforcement	4,420	lb	1.75	7,735				
			12	Chain link fencing	257	lf	30.00	7,710				
			13	CMU Wall (8' high, 15 lf long)	120	sf	100.00	12,000				
			14	Structural Steel - Sunshades (20' x 26'; 10,300 lbs)	1	ea	30,000.00	30,000				
			15	Mobilization (+/- 5%)				19,448				
			16	Unlisted Items (+/- 15%)				61,260				
			17	Allowance for Procurement Strategies (+/- 5%)				20,343				
				Subtotal				490,000				
				Contingencies (+/- 20%)				100,000				
				Field Cost - Structures and Improvements				590,000				

CONSTRUCTION COST ESTIMATE

PROJECT: Central Valley Project	PREPARED BY: Regional Office, Sacramento, CA
DIVISION: West San Joaquin Division	ESTIMATE DATE: July 2007 (Revised after DEC)
UNIT: San Luis Unit -- Drainage System -- Westlands Water District-North	ESTIMATE TYPE: Feasibility
FEATURE: Drainage Feature Re-Evaluation Feasibility Study	PRICE LEVEL: April 2006

PROPERTY CLASS	IDENTIFIED PROPERTY	PLANT ACCOUNT	ITEM	DESCRIPTION	QUANTITY	UNIT	PRICE	AMOUNT	FIELD COST	TOTAL FIELD COST	NONCONTRACT COST	CONSTRUCTION COST
03	03			PUMPING PLANT O (continued)								
		152		Waterways					47,000			
			1	Steel piping & flanges for manifold	1,124	lb	6.00	6,744				
			2	Motor Op. BFV; Class 150; D=6"; 226 lb/valve	1	ea	16,250.00	16,250				
			3	Tilt Disk Ck. Valve; Class 125; D=6"; 82 lb/valve	1	ea	7,000.00	7,000				
			4	Ball Valve for AV; D=1"; 2 lbs/valve	2	ea	170.00	340				
			5	Air Valves; D=1"; 35 lbs/valve	2	ea	300.00	600				
			6	Mobilization (+/- 5%)				1,547				
			7	Unlisted Items (+/- 15%)				4,872				
			8	Allowance for Procurement Strategies (+/- 5%)				1,647				
				Subtotal				39,000				
				Contingencies (+/- 20%)				8,000				
				Field Cost - Waterways				47,000				
		153		Waterways Structures					13,000			
			1	Pipe Flowmeter; D = 6"	1	ea	8,500.00	8,500				
			2	Mobilization (+/- 5%)				425				
			3	Unlisted Items (+/- 15%)				1,339				
			4	Allowance for Procurement Strategies (+/- 5%)				736				
				Subtotal				11,000				
				Contingencies (+/- 20%)				2,000				
				Field Cost - Waterways Structures				13,000				

CONSTRUCTION COST ESTIMATE

PROJECT: Central Valley Project	PREPARED BY: Regional Office, Sacramento, CA
DIVISION: West San Joaquin Division	ESTIMATE DATE: July 2007 (Revised after DEC)
UNIT: San Luis Unit -- Drainage System -- Westlands Water District-North	ESTIMATE TYPE: Feasibility
FEATURE: Drainage Feature Re-Evaluation Feasibility Study	PRICE LEVEL: April 2006

PROPERTY CLASS	IDENTIFIED PROPERTY	PLANT ACCOUNT	ITEM	DESCRIPTION	QUANTITY	UNIT	PRICE	AMOUNT	FIELD COST	TOTAL FIELD COST	NONCONTRACT COST	CONSTRUCTION COST
03	03			PUMPING PLANT O (continued)								
		160		Pumps and Prime Movers					230,000			
			1	Vertical Turbine Unit; 2-stg; 3500 rpm; Rated 202 gpm; TDH=123 ft.	1,480	lb	90.00	133,200				
				W/ vert Induction motor @ 10 hp; 3600 rpm; 3ph / 60 hz / 460 v								
			2	Flygt, 8" Std. CP-3152 submersible wastewater pump; 1750 rpm	800	lb	25.00	20,000				
				Q = 900 gpm; TDH = 42 ft.; w/ 20 hp submersible motor								
			3	Mobilization (+/- 5%)				7,660				
			4	Unlisted Items (+/- 15%)				24,129				
			5	Allowance for Procurement Strategies (+/- 5%)				10,011				
				Subtotal				195,000				
				Contingencies (+/- 20%)				35,000				
				Field Cost - Pumps and Prime Movers				230,000				
		170		Accessory Electrical Equipment					58,000			
			1	F&I PVC coated rigid steel conduit - 3/4 Inch	100	ft	15.00	1,500				
			2	F&I PVC coated rigid steel conduit - 2 Inch	50	ft	31.00	1,550				
			3	F&I single conductor - 12 AWG	400	ft	2.50	1,000				
			4	F&I single conductor - 1 AWG	200	ft	5.50	1,100				
			5	F&I grounding system - 4/0 bare copper	200	ft	12.00	2,400				
			6	F&I grounding system - 3/4" dia. 10 foot ground rod	8	ea	175.00	1,400				
			7	F&I Distribution Board w/ enclosure, trips, & A frames	1	ls	2,850.00	2,850				
			8	F&I transformer and load center, w/ enclosure, breakers, and	1	ea	4,000.00	4,000				
				7.5 KVA, single phase, 480V-240/120 V								
			9	F&I Control board for main pump, w/enclosure, relays, switches,	1	ls	10,000.00	10,000				
				fuse block, terminal block, & 10 hp motor starter	1	ea						
			10	F&I Control board for submersible wastewater pump	1	ls	10,000.00	10,000				
			11	Furnish and install 100 A, 480V, 3 Phase meter socket	1	ea	500.00	500				
			12	Furnish and install 100A, 600V, 3 Phase fused disconnect switch	1	ea	1,500.00	1,500				

CONSTRUCTION COST ESTIMATE

PROJECT: Central Valley Project	PREPARED BY: Regional Office, Sacramento, CA
DIVISION: West San Joaquin Division	ESTIMATE DATE: July 2007 (Revised after DEC)
UNIT: San Luis Unit -- Drainage System -- Westlands Water District-North	ESTIMATE TYPE: Feasibility
FEATURE: Drainage Feature Re-Evaluation Feasibility Study	PRICE LEVEL: April 2006

PROPERTY CLASS	IDENTIFIED PROPERTY	PLANT ACCOUNT	ITEM	DESCRIPTION	QUANTITY	UNIT	PRICE	AMOUNT	FIELD COST	TOTAL FIELD COST	NONCONTRACT COST	CONSTRUCTION COST
03	03			PUMPING PLANT O (continued)								
		170		Accessory Electrical Equipment (continued)								
			13	Mobilization (+/- 5%)				1,890				
			14	Unlisted Items (+/- 15%)				5,954				
			15	Allowance for Procurement Strategies (+/- 5%)				2,357				
				Subtotal				48,000				
				Contingencies (+/- 20%)				10,000				
				Field Cost - Accessory Electrical				58,000				
		175		Station Equipment					88,000			
			1	Oil filled, distribution power transformer, 45 kVA; 12.47kV-480V	1	ea	25,000.00	25,000				
			2	7.65-kV MCOV metal oxide distribution class arrester	3	ea	2,000.00	6,000				
			3	3-phase, 15-kV fused disconnect switch, 2E-5E	1	ea	25,000.00	25,000				
			4	50 foot wood pole for incoming line	1	ea	2,000.00	2,000				
			5	Mobilization (+/- 5%)				2,900				
			6	Unlisted Items (+/- 15%)				9,135				
			7	Allowance for Procurement Strategies (+/- 5%)				3,965				
				Subtotal				74,000				
				Contingencies (+/- 20%)				14,000				
				Field Cost - Station Equipment				88,000				
				FACILITATING SERVICES (2%)								
				INVESTIGATIONS (3%)								
				DESIGNS & SPECIFICATIONS (10%)								
				CONSTRUCTION SUPERVISION (12%)								
				OTHER COSTS (+/- 27%)							274,000	

CONSTRUCTION COST ESTIMATE

PROJECT: Central Valley Project	PREPARED BY: Regional Office, Sacramento, CA
DIVISION: West San Joaquin Division	ESTIMATE DATE: July 2007 (Revised after DEC)
UNIT: San Luis Unit -- Drainage System -- Westlands Water District-North	ESTIMATE TYPE: Feasibility
FEATURE: Drainage Feature Re-Evaluation Feasibility Study	PRICE LEVEL: April 2006

PROPERTY CLASS	IDENTIFIED PROPERTY	PLANT ACCOUNT	ITEM	DESCRIPTION	QUANTITY	UNIT	PRICE	AMOUNT	FIELD COST	TOTAL FIELD COST	NONCONTRACT COST	CONSTRUCTION COST
07				DRAINS						34,500,000	9,700,000	44,200,000
	01			COLLECTION SYSTEM M -- This HDPE pipe collection system services						16,930,000	5,070,000	22,000,000
				approximately 9,770 acres of land: Total length = 32.73 miles;								
				Pipe D range = 4" to 24". All pipes discharge to Reuse Area M.								
		100		Land and Rights					730,000			
			1	Permanent Easements	79	Ac	2,100.00	165,900				
			2	Temporary Easements	298	Ac	1,470.00	438,060				
			3	Unlisted Items (+/- 5%)				26,040				
				Subtotal				630,000				
				Contingencies (+/- 15%)				100,000				
				Field Cost - Land and Rights				730,000				
		152		Waterways					12,500,000			
			1	Excavation	290,000	cy	4.50	1,305,000				
			2	Backfill	280,000	cy	3.00	840,000				
			3	Compacting backfill	25,500	cy	8.50	216,750				
			4	Select fill (bedding)	1,120	cy	55.00	61,600				
			5	Excavation - Trench box	56,000	cy	15.00	840,000				
			6	Backfill - Trench box	54,000	cy	7.00	378,000				
			7	Compacting backfill - Trench box	28,300	cy	20.00	566,000				
			8	Select fill (bedding) - Trench box	1,240	cy	60.00	74,400				
			9	Unwatering	1	ls	950,000.00	950,000				
				Furnish and Lay the following HDPE Pipe								
			10	4 inch DR26	10,600	lf	8.50	90,100				
			11	5 inch DR26	23,800	lf	10.00	238,000				
			12	6 inch DR32.5	37,000	lf	11.00	407,000				
			13	7 inch DR32.5	5,280	lf	12.00	63,360				
			14	8 inch DR32.5	34,300	lf	14.50	497,350				
			15	10 inch DR32.5	23,800	lf	19.00	452,200				
			16	12 inch DR32.5	6,370	lf	29.00	184,730				

CONSTRUCTION COST ESTIMATE

PROJECT: Central Valley Project	PREPARED BY: Regional Office, Sacramento, CA
DIVISION: West San Joaquin Division	ESTIMATE DATE: July 2007 (Revised after DEC)
UNIT: San Luis Unit -- Drainage System -- Westlands Water District-North	ESTIMATE TYPE: Feasibility
FEATURE: Drainage Feature Re-Evaluation Feasibility Study	PRICE LEVEL: April 2006

PROPERTY CLASS	IDENTIFIED PROPERTY	PLANT ACCOUNT	ITEM	DESCRIPTION	QUANTITY	UNIT	PRICE	AMOUNT	FIELD COST	TOTAL FIELD COST	NONCONTRACT COST	CONSTRUCTION COST
07	01			COLLECTION SYSTEM M (continued)								
		152		Waterways (continued)								
			17	14 inch DR32.5	13,200	lf	33.00	435,600				
			18	16 inch DR32.5	2,640	lf	40.00	105,600				
			19	20 inch DR32.5	2,640	lf	55.00	145,200				
			20	22 inch DR32.5	5,280	lf	65.00	343,200				
			21	24 inch DR32.5	7,920	lf	75.00	594,000				
			22	Mobilization (+/- 5%)				439,405				
			23	Unlisted Items (+/- 15%)				1,272,506				
				Subtotal				10,500,000				
				Contingencies (+/- 20%)				2,000,000				
				Field Cost - Waterways				12,500,000				
		153		Waterway Structures					3,700,000			
			1	Pipe Crossings, Roads: Pipe Dia 24" and less	43	ls	60,000.00	2,580,000				
			2	Mobilization (+/- 5%)				129,000				
			3	Unlisted Items (+/- 15%)				391,000				
				Subtotal				3,100,000				
				Contingencies (+/- 20%)				600,000				
				Field Cost - Waterway Structures				3,700,000				
				FACILITATING SERVICES (2%)								
				INVESTIGATIONS (3%)								
				DESIGNS & SPECIFICATIONS (10%)								
				CONSTRUCTION SUPERVISION (12%)								
				OTHER COSTS (+/- 27%)							5,070,000	

CONSTRUCTION COST ESTIMATE

PROJECT: Central Valley Project	PREPARED BY: Regional Office, Sacramento, CA
DIVISION: West San Joaquin Division	ESTIMATE DATE: July 2007 (Revised after DEC)
UNIT: San Luis Unit -- Drainage System -- Westlands Water District-North	ESTIMATE TYPE: Feasibility
FEATURE: Drainage Feature Re-Evaluation Feasibility Study	PRICE LEVEL: April 2006

PROPERTY CLASS	IDENTIFIED PROPERTY	PLANT ACCOUNT	ITEM	DESCRIPTION	QUANTITY	UNIT	PRICE	AMOUNT	FIELD COST	TOTAL FIELD COST	NONCONTRACT COST	CONSTRUCTION COST
07	02			COLLECTION SYSTEM N -- This HDPE pipe collection system services						4,410,000	1,190,000	5,600,000
				approximately 3,430 acres of land: Total length = 11.50 miles;								
				Pipe D range = 5" to 16". All pipes discharge to Reuse Area N.								
		100		Land and Rights					260,000			
			1	Permanent Easements	28	Ac	2,100.00	58,800				
			2	Temporary Easements	105	Ac	1,470.00	154,350				
			3	Unlisted Items (+/- 5%)				6,850				
				Subtotal				220,000				
				Contingencies (+/- 15%)				40,000				
				Field Cost - Land and Rights				260,000				
		152		Waterways					3,000,000			
			1	Excavation	104,500	cy	4.50	470,250				
			2	Backfill	104,500	cy	3.00	313,500				
			3	Compacting backfill	11,700	cy	8.50	99,450				
			4	Select fill (bedding)	130	cy	55.00	7,150				
			5	Excavation - Trench box	2,900	cy	15.00	43,500				
			6	Backfill - Trench box	2,800	cy	7.00	19,600				
			7	Compacting backfill - Trench box	1,760	cy	20.00	35,200				
			8	Select fill (bedding) - Trench box	20	cy	60.00	1,200				
			9	Unwatering	1	ls	250,000.00	250,000				
				Furnish and Lay the following HDPE Pipe								
			10	5 inch DR26	18,500	lf	10.00	185,000				
			11	6 inch DR32.5	13,200	lf	11.00	145,200				
			12	7 inch DR32.5	7,920	lf	12.00	95,040				
			13	8 inch DR32.5	13,200	lf	14.50	191,400				
			14	10 inch DR32.5	5,280	lf	19.00	100,320				
			15	16 inch DR32.5	2,640	lf	40.00	105,600				

CONSTRUCTION COST ESTIMATE

PROJECT: Central Valley Project	PREPARED BY: Regional Office, Sacramento, CA
DIVISION: West San Joaquin Division	ESTIMATE DATE: July 2007 (Revised after DEC)
UNIT: San Luis Unit -- Drainage System -- Westlands Water District-North	ESTIMATE TYPE: Feasibility
FEATURE: Drainage Feature Re-Evaluation Feasibility Study	PRICE LEVEL: April 2006

PROPERTY CLASS	IDENTIFIED PROPERTY	PLANT ACCOUNT	ITEM	DESCRIPTION	QUANTITY	UNIT	PRICE	AMOUNT	FIELD COST	TOTAL FIELD COST	NONCONTRACT COST	CONSTRUCTION COST
07	02			COLLECTION SYSTEM N (continued)								
		152		Waterways (continued)								
			16	Mobilization (+/- 5%)				103,121				
			17	Unlisted Items (+/- 15%)				334,470				
				Subtotal				2,500,000				
				Contingencies (+/- 20%)				500,000				
				Field Cost - Waterways				3,000,000				
		153		Waterway Structures					1,150,000			
			1	Pipe Crossings, Roads: Pipe Dia 24" and less	13	ls	60,000.00	780,000				
			2	Mobilization (+/- 5%)				39,000				
			3	Unlisted Items (+/- 15%)				121,000				
				Subtotal				940,000				
				Contingencies (+/- 20%)				210,000				
				Field Cost - Waterway Structures				1,150,000				
				FACILITATING SERVICES (2%)								
				INVESTIGATIONS (3%)								
				DESIGNS & SPECIFICATIONS (10%)								
				CONSTRUCTION SUPERVISION (12%)								
				OTHER COSTS (+/- 27%)							1,190,000	

CONSTRUCTION COST ESTIMATE

PROJECT: Central Valley Project	PREPARED BY: Regional Office, Sacramento, CA
DIVISION: West San Joaquin Division	ESTIMATE DATE: July 2007 (Revised after DEC)
UNIT: San Luis Unit -- Drainage System -- Westlands Water District-North	ESTIMATE TYPE: Feasibility
FEATURE: Drainage Feature Re-Evaluation Feasibility Study	PRICE LEVEL: April 2006

PROPERTY CLASS	IDENTIFIED PROPERTY	PLANT ACCOUNT	ITEM	DESCRIPTION	QUANTITY	UNIT	PRICE	AMOUNT	FIELD COST	TOTAL FIELD COST	NONCONTRACT COST	CONSTRUCTION COST
07	03			COLLECTION SYSTEM O -- This HDPE pipe collection system services						9,110,000	2,390,000	11,500,000
				approximately 5,530 acres of land: Total length = 18.53 miles;								
				Pipe D range = 5" to 20". All pipes discharge to Reuse Area O.								
		100		Land and Rights					410,000			
			1	Permanent Easements	45	Ac	2,100.00	94,500				
			2	Temporary Easements	168	Ac	1,470.00	246,960				
			3	Unlisted Items (+/- 5%)				18,540				
				Subtotal				360,000				
				Contingencies (+/- 15%)				50,000				
				Field Cost - Land and Rights				410,000				
		152		Waterways					6,500,000			
			1	Excavation	140,000	cy	4.50	630,000				
			2	Backfill	140,000	cy	3.00	420,000				
			3	Compacting backfill	16,800	cy	8.50	142,800				
			4	Select fill (bedding)	830	cy	55.00	45,650				
			5	Excavation - Trench box	23,000	cy	15.00	345,000				
			6	Backfill - Trench box	22,000	cy	7.00	154,000				
			7	Compacting backfill - Trench box	14,000	cy	20.00	280,000				
			8	Select fill (bedding) - Trench box	690	cy	60.00	41,400				
			9	Unwatering	1	ls	450,000.00	450,000				
				Furnish and Lay the following HDPE Pipe								
			10	5 inch DR26	18,500	lf	10.00	185,000				
			11	6 inch DR32.5	21,100	lf	11.00	232,100				
			12	7 inch DR32.5	5,280	lf	12.00	63,360				
			13	8 inch DR32.5	14,300	lf	14.50	207,350				
			14	10 inch DR32.5	13,200	lf	19.00	250,800				
			15	12 inch DR32.5	5,280	lf	29.00	153,120				
			16	14 inch DR32.5	6,370	lf	33.00	210,210				
			17	18 inch DR32.5	3,730	lf	40.00	149,200				
			18	20 inch DR32.5	10,100	lf	55.00	555,500				

CONSTRUCTION COST ESTIMATE

PROJECT: Central Valley Project	PREPARED BY: Regional Office, Sacramento, CA
DIVISION: West San Joaquin Division	ESTIMATE DATE: July 2007 (Revised after DEC)
UNIT: San Luis Unit -- Drainage System -- Westlands Water District-North	ESTIMATE TYPE: Feasibility
FEATURE: Drainage Feature Re-Evaluation Feasibility Study	PRICE LEVEL: April 2006

PROPERTY CLASS	IDENTIFIED PROPERTY	PLANT ACCOUNT	ITEM	DESCRIPTION	QUANTITY	UNIT	PRICE	AMOUNT	FIELD COST	TOTAL FIELD COST	NONCONTRACT COST	CONSTRUCTION COST
07	03			COLLECTION SYSTEM O (continued)								
		152		Waterways (continued)								
			19	Mobilization (+/- 5%)				225,775				
			20	Unlisted Items (+/- 15%)	97,860			758,736				
				Subtotal				5,500,000				
				Contingencies (+/- 20%)				1,000,000				
				Field Cost - Waterways				6,500,000				
		153		Waterway Structures					2,200,000			
			1	Pipe Crossings, Roads: Pipe Dia 24" and less	25	ls	60,000.00	1,500,000				
			2	Mobilization (+/- 5%)				75,000				
			3	Unlisted Items (+/- 15%)				225,000				
				Subtotal				1,800,000				
				Contingencies (+/- 20%)				400,000				
				Field Cost - Waterway Structures				2,200,000				
				FACILITATING SERVICES (2%)								
				INVESTIGATIONS (3%)								
				DESIGNS & SPECIFICATIONS (10%)								
				CONSTRUCTION SUPERVISION (12%)								
				OTHER COSTS (+/- 27%)							2,390,000	

CONSTRUCTION COST ESTIMATE

PROJECT: Central Valley Project	PREPARED BY: Regional Office, Sacramento, CA
DIVISION: West San Joaquin Division	ESTIMATE DATE: July 2007 (Revised after DEC)
UNIT: San Luis Unit -- Drainage System -- Westlands Water District-North	ESTIMATE TYPE: Feasibility
FEATURE: Drainage Feature Re-Evaluation Feasibility Study	PRICE LEVEL: April 2006

PROPERTY CLASS	IDENTIFIED PROPERTY	PLANT ACCOUNT	ITEM	DESCRIPTION	QUANTITY	UNIT	PRICE	AMOUNT	FIELD COST	TOTAL FIELD COST	NONCONTRACT COST	CONSTRUCTION COST
07	04			NORTH DRAINAGE CONVEYANCE SYSTEM --These HDPE pipes						4,050,000	1,050,000	5,100,000
				take drain water from Reuse Areas M, N, and O to the regulating tank at								
				the treatment facility. Total Length = 11.09 miles. Pipe D = 6" and 8"								
		100		Land and Rights					250,000			
			1	Permanent Easements	27	Ac	2,100.00	56,700				
			2	Temporary Easements	101	Ac	1,470.00	148,470				
			3	Unlisted Items (+/- 5%)				14,830				
				Subtotal				220,000				
				Contingencies (+/- 15%)				30,000				
				Field Cost - Land and Rights				250,000				
		152		Waterways					2,600,000			
			1	Excavation	63,300	cy	4.50	284,850				
			2	Backfill	62,700	cy	3.00	188,100				
			3	Compacting backfill	8,800	cy	8.50	74,800				
			4	Excavation - Trench box	8,800	cy	15.00	132,000				
			5	Backfill - Trench box	8,500	cy	7.00	59,500				
			6	Compacting backfill - Trench box	3,250	cy	20.00	65,000				
			7	Unwatering	1	ls	200,000.00	200,000				
				Furnish and Lay the following HDPE Pipe								
			8	6 inch DR26	37,420	lf	12.00	449,040				
			9	8 inch DR26	21,140	lf	16.50	348,810				
			10	Mobilization (+/- 5%)				90,105				
			11	Unlisted Items (+/- 15%)				307,795				
				Subtotal				2,200,000				
				Contingencies (+/- 20%)				400,000				
				Field Cost - Waterways				2,600,000				

CONSTRUCTION COST ESTIMATE

PROJECT: Central Valley Project	PREPARED BY: Regional Office, Sacramento, CA
DIVISION: West San Joaquin Division	ESTIMATE DATE: July 2007 (Revised after DEC)
UNIT: San Luis Unit -- Drainage System -- Westlands Water District-North	ESTIMATE TYPE: Feasibility
FEATURE: Drainage Feature Re-Evaluation Feasibility Study	PRICE LEVEL: April 2006

PROPERTY CLASS	IDENTIFIED PROPERTY	PLANT ACCOUNT	ITEM	DESCRIPTION	QUANTITY	UNIT	PRICE	AMOUNT	FIELD COST	TOTAL FIELD COST	NONCONTRACT COST	CONSTRUCTION COST
07	04			NORTH DRAINAGE CONVEYANCE SYSTEM (continued)								
		153		Waterway Structures					1,200,000			
			1	Pipe Crossings, Roads: Pipe Dia 24" and less	14	ea	60,000.00	840,000				
			2	Mobilization (+/- 5%)				42,000				
			3	Unlisted Items (+/- 15%)				118,000				
				Subtotal				1,000,000				
				Contingencies (+/- 20%)				200,000				
				Field Cost - Waterway Structures				1,200,000				
				FACILITATING SERVICES (2%)								
				INVESTIGATIONS (3%)								
				DESIGNS & SPECIFICATIONS (10%)								
				CONSTRUCTION SUPERVISION (12%)								
				OTHER COSTS (+/- 27%)							1,050,000	

CONSTRUCTION COST ESTIMATE

PROJECT: Central Valley Project	PREPARED BY: Regional Office, Sacramento, CA
DIVISION: West San Joaquin Division	ESTIMATE DATE: July 2007 (Revised after DEC)
UNIT: San Luis Unit -- Drainage System -- Westlands Water District-North	ESTIMATE TYPE: Feasibility
FEATURE: Drainage Feature Re-Evaluation Feasibility Study	PRICE LEVEL: April 2006

PROPERTY CLASS	IDENTIFIED PROPERTY	PLANT ACCOUNT	ITEM	DESCRIPTION	QUANTITY	UNIT	PRICE	AMOUNT	FIELD COST	TOTAL FIELD COST	NONCONTRACT COST	CONSTRUCTION COST
12				SPECIAL PLANTS						118,038,000	31,562,000	149,600,000
	01			WWD NORTH - REUSE AREAS -- Three Reuse Areas (M, N, and O) total						14,950,000	4,050,000	19,000,000
				1,120 acres in size. Conveyance pipelines distribute drain water over								
				a reuse area and on-farm drain pipes collect drain water for delivery to								
				the reuse area pumping plants.								
		100		Land and Rights					5,400,000			
			1	Seasonal Crop Land - Fee	1,120	Ac	4,000.00	4,480,000				
			2	Unlisted Items (+/- 5%)				20,000				
				Subtotal				4,500,000				
				Contingencies (+/- 15%)				900,000				
				Field Cost - Land and Rights				5,400,000				
		152		Waterways					9,550,000			
				(1) Land Development								
			1	Land Smoothing and Re- Leveling	1,120	Ac	$500.00	560,000				
			2	Establish Initial Forage Crops; Seeding and Drilling	1,120	Ac	$1,000.00	1,120,000				
			3	Mobilization (+/- 5%)				84,000				
			4	Unlisted Items (+/- 15%)				236,000				
				Subtotal				2,000,000				
				Contingencies (+/- 20%)				400,000				
				Field Cost - (1) Land Development				2,400,000				

CONSTRUCTION COST ESTIMATE

PROJECT: Central Valley Project	PREPARED BY: Regional Office, Sacramento, CA
DIVISION: West San Joaquin Division	ESTIMATE DATE: July 2007 (Revised after DEC)
UNIT: San Luis Unit -- Drainage System -- Westlands Water District-North	ESTIMATE TYPE: Feasibility
FEATURE: Drainage Feature Re-Evaluation Feasibility Study	PRICE LEVEL: April 2006

PROPERTY CLASS	IDENTIFIED PROPERTY	PLANT ACCOUNT	ITEM	DESCRIPTION	QUANTITY	UNIT	PRICE	AMOUNT	FIELD COST	TOTAL FIELD COST	NONCONTRACT COST	CONSTRUCTION COST
12	01			WWD NORTH - REUSE AREAS (continued)								
		152		Waterways (continued)								
				(2) Water Distribution Facilities								
				Buried Pipelines								
			1	Excavation	16,750	cy	$4.50	75,375				
			2	Backfill	16,080	cy	$3.00	48,240				
			3	Selected Fill; Bedding	200	cy	$55.00	11,000				
			4	Compacting Backfill	520	cy	$8.50	4,420				
				Furnish and Lay the following HDPE Pipe:								
			5	10SDR32.5	1,980	lf	$19.00	37,620				
			6	12SDR32.5	2,640	lf	$29.00	76,560				
				Above Ground Pipe								
				Furnish and Lay the following Alum. Gated Irr. Pipe w/ band Connectors:								
			7	6" diameter, w/ 36" recessed gate spacing	1,650	lf	$21.00	34,650				
			8	8" diameter, w/ 36" recessed gate spacing	5,120	lf	$24.00	122,880				
			9	10" diameter, w/ 36" recessed gate spacing	7,780	lf	$25.00	194,500				
			10	12" diameter, w/ 36" recessed gate spacing	8,580	lf	$33.00	283,140				
				Furnish and Lay the following Alum. Non-Gated Irr. Pipe w/ band Connectors:								
				and Polypropylene Gates								
			11	6-inch dia. Aluminum; non-gated pipe;	990	lf	$23.00	22,770				
			12	8-inch dia. Aluminum; non-gated pipe;	3,960	lf	$24.00	95,040				
			13	10-inch dia. Aluminum; non-gated pipe;	1,320	lf	$32.00	42,240				
				Polyethylene Riser Pipe and Gate Valve:								
				- assume DR32.5 & a minimum purchase of 10 lf/ea)								
			14	6-inch dia.	2	ea	$1,610.00	3,220				
			15	8-inch dia.	2	ea	$2,145.00	4,290				
			16	10-inch dia.	5	ea	$2,690.00	13,450				
			17	12-inch dia.	8	ea	$3,790.00	30,320				

CONSTRUCTION COST ESTIMATE

PROJECT: Central Valley Project	PREPARED BY: Regional Office, Sacramento, CA
DIVISION: West San Joaquin Division	ESTIMATE DATE: July 2007 (Revised after DEC)
UNIT: San Luis Unit -- Drainage System -- Westlands Water District-North	ESTIMATE TYPE: Feasibility
FEATURE: Drainage Feature Re-Evaluation Feasibility Study	PRICE LEVEL: April 2006

PROPERTY CLASS	IDENTIFIED PROPERTY	PLANT ACCOUNT	ITEM	DESCRIPTION	QUANTITY	UNIT	PRICE	AMOUNT	FIELD COST	TOTAL FIELD COST	NONCONTRACT COST	CONSTRUCTION COST
12	01			WWD NORTH - REUSE AREAS (continued)								
		152		Waterways (continued)								
				(2) Water Distribution Facilities (continued)								
			18	Mobilization (+/- 5%)				54,986				
			19	Unlisted Items (+/- 15%)				195,299				
				Subtotal				1,350,000				
				Contingencies (+/- 20%)				250,000				
				Field Cost - (2) Water Distribution Facilities				1,600,000				
				(3) Tail Water Collection and Recycling								
			1	Excavation	63,830	cy	$4.50	287,235				
			2	Backfill	61,450	cy	$3.00	184,350				
			3	Compacting Backfill (85% proctor)	725	cy	$8.50	6,163				
			4	Select Fill; bedding	1,720	cy	$55.00	94,600				
				Furnish and Lay the following HDPE Pipe:								
			5	10SDR26	18,480	lf	$22.00	406,560				
			6	Riser Pipe; 10SDR26 HDPE x 7 ft (assume 10' minimum)	6	ea	$220.00	1,320				
			7	10 inch check valve (20 psi)	6	ea	$15,000.00	90,000				
			8	Surface Drainage Ditch at field divisions;	32,740	lf	$2.00	65,480				
			9	Mobilization (+/- 5%)				56,785				
			10	Unlisted Items (+/- 15%)				157,507				
				Subtotal				1,350,000				
				Contingencies (+/- 20%)				300,000				
				Field Cost - (3) Tail Water Collection and Recycling				1,650,000				

CONSTRUCTION COST ESTIMATE

PROJECT: Central Valley Project	PREPARED BY: Regional Office, Sacramento, CA
DIVISION: West San Joaquin Division	ESTIMATE DATE: July 2007 (Revised after DEC)
UNIT: San Luis Unit -- Drainage System -- Westlands Water District-North	ESTIMATE TYPE: Feasibility
FEATURE: Drainage Feature Re-Evaluation Feasibility Study	PRICE LEVEL: April 2006

PROPERTY CLASS	IDENTIFIED PROPERTY	PLANT ACCOUNT	ITEM	DESCRIPTION	QUANTITY	UNIT	PRICE	AMOUNT	FIELD COST	TOTAL FIELD COST	NONCONTRACT COST	CONSTRUCTION COST
12	01			WWD NORTH - REUSE AREAS (continued)								
		152		Waterways (continued)								
				(4) Reuse Area Drainage Collection System								
				Spaced Drains								
			1	48"x14 ft concrete manholes	120		$14,000.00	1,680,000				
			2	6" dia tile drain, installed w/gravel envelope	108,230		$5.00	541,150				
				Collector Drains								
			3	8" dia tile drain, w/gravel envelope	9,060		$6.00	54,360				
			4	10" dia tile drain, w/gravel envelope	6,450		$9.50	61,275				
			5	12" dia tile drain, w/gravel envelope	2,970		$10.50	31,185				
			6	DOS-IR or Inline Water Lvl Control Valves, 8" x 14 ft	40		$2,600.00	104,000				
			7	DOS-IR or Inline Water Lvl Control Valves, 6" x 14 ft	40		$1,600.00	64,000				
			8	Drain ROW Shaping & Surface Repairs	290		$500.00	145,000				
			9	Mobilization (+/- 5%)				134,049				
			10	Unlisted Items (+/- 15%)				384,982				
				Subtotal				3,200,000				
				Contingencies (+/- 20%)				700,000				
				Field Cost - (4) Reuse Area Drainage Collection System				3,900,000				
				Field Cost - Waterways				9,550,000				
				FACILITATING SERVICES (2%)								
				INVESTIGATIONS (3%)								
				DESIGNS & SPECIFICATIONS (10%)								
				CONSTRUCTION SUPERVISION (12%)								
				OTHER COSTS (+/- 27%)							4,050,000	

CONSTRUCTION COST ESTIMATE

PROJECT: Central Valley Project	PREPARED BY: Regional Office, Sacramento, CA
DIVISION: West San Joaquin Division	ESTIMATE DATE: July 2007 (Revised after DEC)
UNIT: San Luis Unit -- Drainage System -- Westlands Water District-North	ESTIMATE TYPE: Feasibility
FEATURE: Drainage Feature Re-Evaluation Feasibility Study	PRICE LEVEL: April 2006

PROPERTY CLASS	IDENTIFIED PROPERTY	PLANT ACCOUNT	ITEM	DESCRIPTION	QUANTITY	UNIT	PRICE	AMOUNT	FIELD COST	TOTAL FIELD COST	NONCONTRACT COST	CONSTRUCTION COST
12	02			RO TREATMENT PLANT - This treatment plant handles the water from						6,506,000	1,794,000	8,300,000
				Areas M, N, and O. Rapid mix, flocculation, and filtration are included.								
		100		Land and Rights					16,000			
			1	Seasonal Crop Land - Fee	3	Ac	4,000.00	12,000				
			2	Unlisted Items (+/- 5%)				1,000				
				Subtotal				13,000				
				Contingencies (+/- 15%)				3,000				
				Field Cost - Land and Rights				16,000				
		130		Structure and Improvements					3,800,000			
			1	Concrete Pad for Pretreatment System	12.5	cy	1,350.00	16,875				
			2	Site Work				28,400				
			3	Building	5,896	sf	250.00	1,474,000				
			4	Rapid Mix Tank				27,200				
			5	Flocculation				71,900				
			6	Filtration				551,400				
			7	Location Factor for Fresno, CA (+/- 7.1% of items 2-6)				152,856				
			8	Mobilization (+/- 5%)				116,132				
			9	Unlisted Items (+/- 15%)				365,814				
			10	Allowance for Procurement Strategy (+/- 5%)				95,423				
				Subtotal				2,900,000				
				Contingencies (+/- 30%)				900,000				
				Field Cost - Structures and Improvements				3,800,000				

CONSTRUCTION COST ESTIMATE

PROJECT: Central Valley Project	PREPARED BY: Regional Office, Sacramento, CA
DIVISION: West San Joaquin Division	ESTIMATE DATE: July 2007 (Revised after DEC)
UNIT: San Luis Unit -- Drainage System -- Westlands Water District-North	ESTIMATE TYPE: Feasibility
FEATURE: Drainage Feature Re-Evaluation Feasibility Study	PRICE LEVEL: April 2006

PROPERTY CLASS	IDENTIFIED PROPERTY	PLANT ACCOUNT	ITEM	DESCRIPTION	QUANTITY	UNIT	PRICE	AMOUNT	FIELD COST	TOTAL FIELD COST	NONCONTRACT COST	CONSTRUCTION COST
12	02			RO TREATMENT PLANT (continued)								
		152		Waterways					1,350,000			
			1	Ferric Chloride Feed System				85,800				
			2	Polyelectrolyte Feed System				53,400				
			3	Antiscalant Feed System				57,600				
			4	Membrane Elements	120	ea	750.00	90,000				
			5	Membrane Vessels/Trains				132,300				
			6	Cartridge Filters				14,700				
			7	Membrane Cleaning Equipment				94,500				
			8	Contractor Engineering & Training				125,800				
			9	Process Piping				52,400				
			10	Yard Piping				50,000				
			11	Location Factor for Fresno, CA (+/- 7.1% of above)				53,712				
			12	Mobilization (+/- 5%)				40,511				
			13	Unlisted Items (+/- 15%)				127,608				
			14	Allowance for Procurement Strategy (+/- 5%)				71,670				
				Subtotal				1,050,000				
				Contingencies (+/- 30%)				300,000				
				Field Cost - Waterways				1,350,000				

CONSTRUCTION COST ESTIMATE

PROJECT: Central Valley Project	PREPARED BY: Regional Office, Sacramento, CA
DIVISION: West San Joaquin Division	ESTIMATE DATE: July 2007 (Revised after DEC)
UNIT: San Luis Unit -- Drainage System -- Westlands Water District-North	ESTIMATE TYPE: Feasibility
FEATURE: Drainage Feature Re-Evaluation Feasibility Study	PRICE LEVEL: April 2006

PROPERTY CLASS	IDENTIFIED PROPERTY	PLANT ACCOUNT	ITEM	DESCRIPTION	QUANTITY	UNIT	PRICE	AMOUNT	FIELD COST	TOTAL FIELD COST	NONCONTRACT COST	CONSTRUCTION COST
12	02			RO TREATMENT PLANT (continued)								
		160		Pumps and Prime Movers					400,000			
			1	Forwarding & High Pressure Pumps				224,000				
			2	Location Factor for Fresno, CA (+/- 7.1% of above)				15,904				
			3	Mobilization (+/- 5%)				11,995				
			4	Unlisted Items (+/- 15%)				37,785				
			5	Allowance for Procurement Strategy (+/- 5%)				10,316				
				Subtotal				300,000				
				Contingencies (+/- 30%)				100,000				
				Field Cost - Pumps and Prime Movers				400,000				
		170		Accessory Electrical					290,000			
			1	Electrical Cost				163,400				
			2	Location Factor for Fresno, CA (+/- 7.1% of above)				11,601				
			3	Mobilization (+/- 5%)				8,750				
			4	Unlisted Items (+/- 15%)				27,563				
			5	Allowance for Procurement Strategy (+/- 5%)				8,686				
				Subtotal				220,000				
				Contingencies (+/- 30%)				70,000				
				Field Cost - Accessory Electrical				290,000				

CONSTRUCTION COST ESTIMATE

PROJECT: Central Valley Project	PREPARED BY: Regional Office, Sacramento, CA
DIVISION: West San Joaquin Division	ESTIMATE DATE: July 2007 (Revised after DEC)
UNIT: San Luis Unit -- Drainage System -- Westlands Water District-North	ESTIMATE TYPE: Feasibility
FEATURE: Drainage Feature Re-Evaluation Feasibility Study	PRICE LEVEL: April 2006

PROPERTY CLASS	IDENTIFIED PROPERTY	PLANT ACCOUNT	ITEM	DESCRIPTION	QUANTITY	UNIT	PRICE	AMOUNT	FIELD COST	TOTAL FIELD COST	NONCONTRACT COST	CONSTRUCTION COST
12	02			RO TREATMENT PLANT (continued)								
		180		Installed Supervisory Control System					650,000			
			1	Instrumentation and Controls				366,600				
			2	Location Factor for Fresno, CA (+/- 7% of above)				26,029				
			3	Mobilization (+/- 5%)				19,631				
			4	Unlisted Items (+/- 15%)				61,839				
			5	Allowance for Procurement Strategy (+/- 5%)				25,901				
				Subtotal				500,000				
				Contingencies (+/- 30%)				150,000				
				Field Cost - Installed Supervisory Control System				650,000				
				FACILITATING SERVICES (2%)								
				INVESTIGATIONS (3%)								
				DESIGNS & SPECIFICATIONS (10%)								
				CONSTRUCTION SUPERVISION (12%)								
				OTHER COSTS (+/- 27%)							1,794,000	

CONSTRUCTION COST ESTIMATE

PROJECT: Central Valley Project	PREPARED BY: Regional Office, Sacramento, CA
DIVISION: West San Joaquin Division	ESTIMATE DATE: July 2007 (Revised after DEC)
UNIT: San Luis Unit -- Drainage System -- Westlands Water District-North	ESTIMATE TYPE: Feasibility
FEATURE: Drainage Feature Re-Evaluation Feasibility Study	PRICE LEVEL: April 2006

PROPERTY CLASS	IDENTIFIED PROPERTY	PLANT ACCOUNT	ITEM	DESCRIPTION	QUANTITY	UNIT	PRICE	AMOUNT	FIELD COST	TOTAL FIELD COST	NONCONTRACT COST	CONSTRUCTION COST
12	03			WWD NORTH Se BIOTREATMENT PLANT - This system is designed						21,190,000	5,810,000	27,000,000
				to handle 285 gpm. It serves Areas M, N, and O.								
		100		Land and Rights					10,000			
			1	Seasonal Crop Land - Fee	2	Ac	4,000.00	8,000				
			2	Unlisted Items (+/- 5%)				500				
				Subtotal				8,500				
				Contingencies (+/- 15%)				1,500				
				Field Cost - Land and Rights				10,000				
		130		STRUCTURES AND IMPROVEMENTS					13,450,000			
				(1) General Site Work					1,150,000			
			1	Paving	1,400	sy	60.00	84,000				
			2	Seeding	16,100	sy	2.00	32,200				
			3	Sod	4	msf	2,400.00	9,600				
				Security								
			4	Perimeter Fence, 8' Chain Link	1,020	lf	40.00	40,800				
			5	Double Swing Gate, 8'x20'	2	ea	9,000.00	18,000				
			6	Camera and Monitor	1	ea	8,500.00	8,500				
			7	Additional Cameras	3	ea	5,000.00	15,000				
			8	Auto Light Features on Cameras, adder ea	4	ea	6,500.00	26,000				
			9	Yard Lighting, on dual switches (light/motion and manual) on posts	12	ea	3,500.00	42,000				
				Earthwork, main structures 3' deep in-ground								
			10	Site clearing and grubbing	2	acre	6,000.00	12,000				
			11	Excavation, all except bioreactors and piping gallery	1,345	cy	12.00	16,140				
			12	Excavation, bioreactors and piping gallery	870	cy	12.00	10,440				
			13	Offsite disposal of waste material	2,210	cy	35.00	77,350				
				Dewatering for Clarifier Waffle Bottom Slab, 3' Dewatering								
			14	Gas Powered Pump, 4 Months Rental and Operation	122	day	2,500.00	305,000				
			15	12 Well Points, 2" Steel Pipe driven 20 feet deep	240	lf	45.00	10,800				
			16	Suction Piping, 3" Plastic	150	lf	35.00	5,250				
			17	Discharge Piping, 4" Plastic	150	lf	60.00	9,000				

CONSTRUCTION COST ESTIMATE

PROJECT: Central Valley Project	PREPARED BY: Regional Office, Sacramento, CA
DIVISION: West San Joaquin Division	ESTIMATE DATE: July 2007 (Revised after DEC)
UNIT: San Luis Unit -- Drainage System -- Westlands Water District-North	ESTIMATE TYPE: Feasibility
FEATURE: Drainage Feature Re-Evaluation Feasibility Study	PRICE LEVEL: April 2006

PROPERTY CLASS	IDENTIFIED PROPERTY	PLANT ACCOUNT	ITEM	DESCRIPTION	QUANTITY	UNIT	PRICE	AMOUNT	FIELD COST	TOTAL FIELD COST	NONCONTRACT COST	CONSTRUCTION COST
12	03			WWD NORTH Se BIOTREATMENT PLANT (continued)								
		130		STRUCTURES AND IMPROVEMENTS (continued)								
				(1) General Site Work (continued)								
			18	Mobilization (+/- 5%)				36,104				
			19	Unlisted Items (+/- 15%)				113,728				
			20	Allowance for Procurement Strategy (+/- 5%)				48,088				
				Subtotal				920,000				
				Contingencies (+/- 25%)				230,000				
				Field Cost - (1) General Site Work				1,150,000				
				(2) Administration Building					1,250,000			
			1	Geotextile Fabric to Separate Native and Structural Fill	2,925	sf	0.50	1,463				
			2	Structural Fill Below Structures (imported material)	55	cy	60.00	3,300				
			3	Foundation	45	cy	700.00	31,500				
			4	Slab on grade	70	cy	600.00	42,000				
			5	Metal Bldg 14' eave, 40' span	2,480	sf	45.00	111,600				
			6	Roofing underlayment, allocation	30	sq	110.00	3,300				
			7	Roofing, Aluminum Standing Seam, anodized	30	sq	720.00	21,600				
			8	Overhanging roof w/ soffit	205	sf	50.00	10,250				
			9	Doors HM Single	3	ea	1,300.00	3,900				
			10	Doors HM Double	2	ea	2,500.00	5,000				
			11	Doors, coiling 10'	1	ea	2,000.00	2,000				
			12	Windows, allocation	4	ea	4,000.00	16,000				
			13	Doors, interior w/ safety glass	7	ea	450.00	3,150				
			14	Interior Walls - Gypsum 24" metal studs	810	sf	10.00	8,100				
			15	Interior Walls - 8" CMU, painted	540	sf	12.00	6,480				
			16	Suspended Ceiling, complete	2,480	sf	10.00	24,800				
			17	Ceiling GWB - Fire Rated	2,480	sf	5.00	12,400				
			18	Flooring System, allocation for high traffic carpet or tile	2,480	sf	20.00	49,600				
			19	Wall Tile, bathrooms	320	sf	40.00	12,800				
			20	API Panels	2,040	sf	20.00	40,800				
			21	Block Veneer to 4' high, precast cap, estimate	815	sf	25.00	20,375				

CONSTRUCTION COST ESTIMATE

PROJECT: Central Valley Project	PREPARED BY: Regional Office, Sacramento, CA
DIVISION: West San Joaquin Division	ESTIMATE DATE: July 2007 (Revised after DEC)
UNIT: San Luis Unit -- Drainage System -- Westlands Water District-North	ESTIMATE TYPE: Feasibility
FEATURE: Drainage Feature Re-Evaluation Feasibility Study	PRICE LEVEL: April 2006

PROPERTY CLASS	IDENTIFIED PROPERTY	PLANT ACCOUNT	ITEM	DESCRIPTION	QUANTITY	UNIT	PRICE	AMOUNT	FIELD COST	TOTAL FIELD COST	NONCONTRACT COST	CONSTRUCTION COST
12	03			WWD NORTH Se BIOTREATMENT PLANT (continued)								
		130		STRUCTURES AND IMPROVEMENTS (continued)								
				(2) Administration Building (continued)								
			22	Laboratory Cabinets, basework	15	lf	350.00	5,250				
			23	Laboratory Cabinets, basework	20	lf	350.00	7,000				
			24	Laboratory Countertop, acidproof	70	sf	80.00	5,600				
			25	Fumehood, Cole Parmer 48" installed	1	ls	13,000.00	13,000				
			26	Lab furniture	485	sf	100.00	48,500				
			27	Lockers, single tier	1	ea	370.00	370				
			28	Lab Sink	1	ea	3,100.00	3,100				
			29	Eye/face wash combo	1	ea	1,200.00	1,200				
			30	Emergency Shower	1	ea	2,500.00	2,500				
			31	Fire Alarm Control Panel - 8 zone	1	ea	4,000.00	4,000				
			32	Battery Rack	1	ea	1,500.00	1,500				
			33	Smoke Detectors	6	ea	250.00	1,500				
			34	Fire Alarm Horn	2	ea	130.00	260				
			35	Fire Extinguishers, CO2 20lb	4	ea	365.00	1,460				
			36	Fire Extinguishers, 100 lb wheeled	1	ea	365.00	365				
			37	HVAC, per sf	2,480	sf	20.00	49,600				
			38	Plumbing, per sf	2,480	sf	10.00	24,800				
			39	Electrical, per sf	2,480	sf	20.00	49,600				
			40	Electrical, additional for well pump and generator	1	ls	40,000.00	40,000				
				Ancillary Facilities To Administration Building								
			41	75 kW Propane Generator	1	ea	40,000.00	40,000				
			42	Auto-Transfer Switch (provided by generator supplier)	1	ea	10,500.00	10,500				
			43	Installation of backup power equipment)+/- 30% of above items	1	ls	15,000.00	15,000				
				New Well								
			44	Driller Mobilization	1	ea	4,000.00	4,000				
			45	8" Well Construction	200	lf	45.00	9,000				
			46	Well Pump, installed w/ valving and controls	1	ea	10,000.00	10,000				
			47	Piping, 2"	100	lf	45.00	4,500				
			48	Reverse Osmosis for Potable Water, in Admin Building	1	ea	10,000.00	10,000				

CONSTRUCTION COST ESTIMATE

PROJECT: Central Valley Project	PREPARED BY: Regional Office, Sacramento, CA
DIVISION: West San Joaquin Division	ESTIMATE DATE: July 2007 (Revised after DEC)
UNIT: San Luis Unit -- Drainage System -- Westlands Water District-North	ESTIMATE TYPE: Feasibility
FEATURE: Drainage Feature Re-Evaluation Feasibility Study	PRICE LEVEL: April 2006

PROPERTY CLASS	IDENTIFIED PROPERTY	PLANT ACCOUNT	ITEM	DESCRIPTION	QUANTITY	UNIT	PRICE	AMOUNT	FIELD COST	TOTAL FIELD COST	NONCONTRACT COST	CONSTRUCTION COST
12	03			WWD NORTH Se BIOTREATMENT PLANT (continued)								
		130		STRUCTURES AND IMPROVEMENTS (continued)								
				(2) Administration Building (continued)								
			49	Mobilization (+/- 5%)				39,651				
			50	Unlisted Items (+/- 15%)				124,901				
			51	Allowance for Procurement Strategy (+/- 5%)				42,425				
				Subtotal				1,000,000				
				Contingencies (+/- 25%)				250,000				
				Field Cost - (2) Administration Building				1,250,000				
				(3) Solids Dewatering Building					2,300,000			
			1	Geotextile Fabric to Separate Native and Structural Fill	2,025	sf	0.50	1,013				
			2	Structural Fill Below Structures (imported material)	55	cy	60.00	3,300				
			3	Pile Installation, 50 ton, 60 ft	660	lf	65.00	42,900				
			4	Foundation	30	cy	700.00	21,000				
			5	Slab on grade	55	cy	600.00	33,000				
			6	Metal Bldg 20' eave, 40' span	2,000	sf	50.00	100,000				
			7	Roofing underlayment, allocation	25	sq	110.00	2,750				
			8	Roofing, Aluminum Standing Seam, anodized	25	sq	720.00	18,000				
			9	Interior Walls - 8" CMU, painted	360	sf	12.00	4,320				
			10	API Panels	3,600	sf	13.00	46,800				
			11	Overhanging roof w/ soffit	180	sf	50.00	9,000				
			12	Belt Presses - Furnish to Site	1	ea	500,000.00	500,000				
			13	Belt Press - Install +/- 30% of Furnish	1	ls	150,000.00	150,000				
			14	Elevated Walkway	400	sf	60.00	24,000				
			15	Polymer System, installed	1	ea	30,000.00	30,000				
			16	Monorail - 3 ton, 30' span, installed	1	ea	30,000.00	30,000				
			17	Conveyors, installed	2	ea	60,000.00	120,000				
			18	HVAC, per sf	2,000	sf	20.00	40,000				
			19	Plumbing, per sf	2,000	sf	10.00	20,000				
			20	Mechanical Piping, allocation	1	ls	100,000.00	100,000				
			21	Electrical, allocation +/- 12% of above items	1	ls	150,000.00	150,000				

CONSTRUCTION COST ESTIMATE

PROJECT: Central Valley Project	PREPARED BY: Regional Office, Sacramento, CA
DIVISION: West San Joaquin Division	ESTIMATE DATE: July 2007 (Revised after DEC)
UNIT: San Luis Unit -- Drainage System -- Westlands Water District-North	ESTIMATE TYPE: Feasibility
FEATURE: Drainage Feature Re-Evaluation Feasibility Study	PRICE LEVEL: April 2006

PROPERTY CLASS	IDENTIFIED PROPERTY	PLANT ACCOUNT	ITEM	DESCRIPTION	QUANTITY	UNIT	PRICE	AMOUNT	FIELD COST	TOTAL FIELD COST	NONCONTRACT COST	CONSTRUCTION COST
12	03			WWD NORTH Se BIOTREATMENT PLANT (continued)								
		130		STRUCTURES AND IMPROVEMENTS (continued)								
				(3) Solids Dewatering Building (continued)								
			22	Fire Extinguishers, CO2 20lb	3	ea	365.00	1,095				
			23	Mobilization (+/- 5%)				72,359				
			24	Unlisted Items (+/- 15%)				227,930				
			25	Allowance for Procurement Strategy (+/- 5%)				102,533				
				Subtotal				1,850,000				
				Contingencies (+/- 25%)				450,000				
				Field Cost - (3) Solids Dewatering Building				2,300,000				
				(4) Mechanical Building					1,400,000			
			1	Geotextile Fabric to Separate Native and Structural Fill	3,575	sf	0.50	1,788				
			2	Structural Fill Below Structures (imported material)	65	cy	60.00	3,900				
			3	Pile Installation, 50 ton, 60 ft	900	lf	65.00	58,500				
			4	Foundation	50	cy	700.00	35,000				
			5	Formwork	225	sf	25.00	5,625				
			6	Rebar #5 12"OC/EWEF	10	ton	3,500.00	35,000				
			7	Concrete Material	175	cy	190.00	33,250				
			8	Concrete Labor	175	cy	135.00	23,625				
			9	Metal Bldg 20' eave, 50' span	3,100	sf	50.00	155,000				
			10	Roofing underlayment, allocation	35	sq	110.00	3,850				
			11	Roofing, Aluminum Standing Seam, anodized	35	sq	720.00	25,200				
			12	API Panels	4,480	sf	13.00	58,240				
			13	Overhanging roof w/ soffit	225	sf	50.00	11,250				
			14	Interior Walls - 8" CMU, painted	480	sf	12.00	5,760				
			15	Doors HM Single	3	ea	1,300.00	3,900				
			16	Doors, coiling 10'	2	ea	2,000.00	4,000				
			17	Windows, allocation	2	ea	4,000.00	8,000				
			18	Doors, interior w/ safety glass	2	ea	450.00	900				
			19	HVAC Mech Room, per sf	3,100	sf	20.00	62,000				
			20	HVAC Pipe Gallery, per sf	1,315	sf	20.00	26,300				

CONSTRUCTION COST ESTIMATE

PROJECT: Central Valley Project	PREPARED BY: Regional Office, Sacramento, CA
DIVISION: West San Joaquin Division	ESTIMATE DATE: July 2007 (Revised after DEC)
UNIT: San Luis Unit -- Drainage System -- Westlands Water District-North	ESTIMATE TYPE: Feasibility
FEATURE: Drainage Feature Re-Evaluation Feasibility Study	PRICE LEVEL: April 2006

PROPERTY CLASS	IDENTIFIED PROPERTY	PLANT ACCOUNT	ITEM	DESCRIPTION	QUANTITY	UNIT	PRICE	AMOUNT	FIELD COST	TOTAL FIELD COST	NONCONTRACT COST	CONSTRUCTION COST
12	03			WWD NORTH Se BIOTREATMENT PLANT (continued)								
		130		STRUCTURES AND IMPROVEMENTS (continued)								
				(4) Mechanical Building (continued)								
			21	Plumbing, per sf	3,100	sf	10.00	31,000				
			22	Electrical standard structure, per sf	3,100	sf	20.00	62,000				
			23	Fire Extinguishers, CO2 20lb	5	ea	365.00	1,825				
			24	Foul Air Blowers, 2,300 cfm @ 12 inches	2	ea	8,000.00	16,000				
			25	Installation, +/- 30% of above	1	ls	4,800.00	4,800				
			26	Aeration Blowers, 400 cfm @ 8 psig	2	ea	20,000.00	40,000				
			27	25 HP VFD, custom engineered	2	ea	11,500.00	23,000				
			28	Installation, +/- 30% of above	1	ls	18,900.00	18,900				
			29	Aeration Diffuser System, installed	267	ea	85.00	22,695				
			30	Instrument Air Compressor, 5 hp	1	ea	4,000.00	4,000				
			31	Installation, +/- 30% of above	1	ls	1,200.00	1,200				
			32	Feed Tank, 8400 gal linear PE	1	ea	40,000.00	40,000				
			33	Installation, +/- 30% of above	1	ls	12,000.00	12,000				
			34	Utility Water / Belt Press Wash Water, ~100 gpm @125psig	2	ea	15,000.00	30,000				
			35	Installation, +/- 30% of above	1	ls	9,000.00	9,000				
				Supply / Exhaust Fans								
			36	Pipe Gallery(40,000 cfm)	2	ea	4,000.00	8,000				
			37	Mech Room (10,000 cfm)	2	ea	1,650.00	3,300				
			38	Solids Dewatering (21,000 cfm)	2	ea	2,500.00	5,000				
			39	Mobilization (+/- 5%)				44,690				
			40	Unlisted Items (+/- 15%)				140,775				
			41	Allowance for Procurement Strategy (+/- 5%)				70,727				
				Subtotal				1,150,000				
				Contingencies (+/- 25%)				250,000				
				Field Cost - (4) Mechanical Building				1,400,000				

CONSTRUCTION COST ESTIMATE

PROJECT: Central Valley Project	PREPARED BY: Regional Office, Sacramento, CA
DIVISION: West San Joaquin Division	ESTIMATE DATE: July 2007 (Revised after DEC)
UNIT: San Luis Unit -- Drainage System -- Westlands Water District-North	ESTIMATE TYPE: Feasibility
FEATURE: Drainage Feature Re-Evaluation Feasibility Study	PRICE LEVEL: April 2006

PROPERTY CLASS	IDENTIFIED PROPERTY	PLANT ACCOUNT	ITEM	DESCRIPTION	QUANTITY	UNIT	PRICE	AMOUNT	FIELD COST	TOTAL FIELD COST	NONCONTRACT COST	CONSTRUCTION COST
12	03			WWD NORTH Se BIOTREATMENT PLANT (continued)								
		130		STRUCTURES AND IMPROVEMENTS (continued)								
				(5) Bioreactor					4,400,000			
			1	Geotextile Fabric to Separate Native and Structural Fill	5,400	sf	0.50	2,700				
			2	Structural Fill Below Structures (imported material)	100	cy	60.00	6,000				
			3	Pile Installation, 50 ton, 60 ft	8,520	lf	65.00	553,800				
				Slab on Grade - Pipe Gallery								
			4	Formwork	145	sf	25.00	3,625				
			5	Rebar #8-6"OC EW/EF	15	ton	3,500.00	52,500				
			6	Waterstop	145	lf	15.00	2,175				
			7	Concrete Material	95	cy	190.00	18,050				
			8	Concrete Labor	95	cy	135.00	12,825				
				Elevated Slab - Pipe Gallery								
			9	Metal Decking	1,350	sf	25.00	33,750				
			10	Structural Steel	115	lf	55.00	6,325				
			11	Formwork	30	sf	25.00	750				
			12	Rebar #4 12"OC EW	1	ton	3,500.00	3,500				
			13	Concrete Material	35	cy	190.00	6,650				
			14	Concrete Labor	35	cy	135.00	4,725				
				Slab on Grade - Bioreactors								
			15	Formwork	1,045	sf	25.00	26,125				
			16	Rebar #8-6"OC EW/EF	35	ton	3,500.00	122,500				
			17	Waterstop	350	lf	15.00	5,250				
			18	Concrete Material	420	cy	190.00	79,800				
				Slab on Grade - Bioreactors (continued)								
			19	Concrete Labor	420	cy	135.00	56,700				
			20	Concrete Liner Material	2,560	sf	10.00	25,600				
				Long Walls - Bioreactors								
			21	Formwork	15,840	sf	25.00	396,000				
			22	Rebar #8-6"OC EW/EF	75	ton	3,500.00	262,500				
			23	Waterstop	400	lf	15.00	6,000				
			24	Concrete Material	880	cy	190.00	167,200				
			25	Concrete Labor	880	cy	135.00	118,800				
			26	Concrete Liner Material	7,680	sf	10.00	76,800				

CONSTRUCTION COST ESTIMATE

PROJECT: Central Valley Project	PREPARED BY: Regional Office, Sacramento, CA
DIVISION: West San Joaquin Division	ESTIMATE DATE: July 2007 (Revised after DEC)
UNIT: San Luis Unit -- Drainage System -- Westlands Water District-North	ESTIMATE TYPE: Feasibility
FEATURE: Drainage Feature Re-Evaluation Feasibility Study	PRICE LEVEL: April 2006

PROPERTY CLASS	IDENTIFIED PROPERTY	PLANT ACCOUNT	ITEM	DESCRIPTION	QUANTITY	UNIT	PRICE	AMOUNT	FIELD COST	TOTAL FIELD COST	NONCONTRACT COST	CONSTRUCTION COST
12	03			WWD NORTH Se BIOTREATMENT PLANT (continued)								
		130		STRUCTURES AND IMPROVEMENTS (continued)								
				(5) Bioreactor (continued)								
				Short Walls - Bioreactors								
			27	Formwork	10,825	sf	25.00	270,625				
			28	Rebar #8-6"OC EW/EF	50	ton	3,500.00	175,000				
			29	Waterstop	265	lf	15.00	3,975				
			30	Concrete Material	600	cy	190.00	114,000				
			31	Concrete Labor	600	cy	135.00	81,000				
			32	Concrete Liner Material	2,050	sf	10.00	20,500				
			33	End Wall - Gallery Room								
			34	Formwork	1,010	sf	25.00	25,250				
			35	Rebar #5-12"OC EW/EF	1	ton	3,500.00	3,500				
			36	Waterstop	55	lf	15.00	825				
			37	Concrete Material	30	cy	190.00	5,700				
			38	Concrete Labor	30	cy	135.00	4,050				
			39	Stairway to Top of Bioreactor Gallery Roof	1	ea	15,000.00	15,000				
			40	Railing on top of Bioreactors Roofs	60	lf	145.00	8,700				
			41	Mobilization (+/- 5%)				138,939				
			42	Unlisted Items (+/- 15%)				437,657				
			43	Allowance for Procurement Strategy (+/- 5%)				144,629				
				Subtotal				3,500,000				
				Contingencies (+/- 25%)				900,000				
				Field Cost - (5) Bioreactor				4,400,000				
				(6) Clarifier					800,000			
			1	Geotextile Fabric to Separate Native and Structural Fill	1,965	sf	0.50	983				
			2	Structural Fill Below Structures (imported material)	35	cy	60.00	2,100				
			3	Pile Installation, 50 ton, 60 ft	2,160	lf	65.00	140,400				
				Slab on Grade - Clarifier								
			4	Formwork	395	sf	25.00	9,875				
			5	Rebar #6-12"OC EW/EF	5	ton	3,500.00	17,500				

CONSTRUCTION COST ESTIMATE

PROJECT: Central Valley Project	PREPARED BY: Regional Office, Sacramento, CA
DIVISION: West San Joaquin Division	ESTIMATE DATE: July 2007 (Revised after DEC)
UNIT: San Luis Unit -- Drainage System -- Westlands Water District-North	ESTIMATE TYPE: Feasibility
FEATURE: Drainage Feature Re-Evaluation Feasibility Study	PRICE LEVEL: April 2006

PROPERTY CLASS	IDENTIFIED PROPERTY	PLANT ACCOUNT	ITEM	DESCRIPTION	QUANTITY	UNIT	PRICE	AMOUNT	FIELD COST	TOTAL FIELD COST	NONCONTRACT COST	CONSTRUCTION COST
12	03			WWD NORTH Se BIOTREATMENT PLANT (continued)								
		130		STRUCTURES AND IMPROVEMENTS (continued)								
				(6) Clarifier (continued)								
			6	Waterstop	160	lf	15.00	2,400				
			7	Concrete Material	145	cy	190.00	27,550				
			8	Concrete Labor	145	cy	135.00	19,575				
			9	Concrete Liner Material	1,600	sf	10.00	16,000				
				Walls - Clarifier								
			10	Formwork	4,400	sf	25.00	110,000				
			11	Rebar #6-10""OC EW/EF	5	ton	3,500.00	17,500				
			12	Waterstop	140	lf	15.00	2,100				
			13	Concrete Material	160	cy	190.00	30,400				
			14	Concrete Labor	160	cy	135.00	21,600				
			15	Concrete Liner Material	2,550	sf	10.00	25,500				
			16	FRP Cover	1,600	sf	40.00	64,000				
			17	Mobilization (+/- 5%)				25,374				
			18	Unlisted Items (+/- 15%)				79,928				
			19	Allowance for Procurement Strategy (+/- 5%)				27,215				
				Subtotal				640,000				
				Contingencies (+/- 25%)				160,000				
				Field Cost - (6) Clarifier				800,000				
				(7) Backwash Tank					770,000			
			1	Geotextile Fabric to Separate Native and Structural Fill	1,965	sf	0.50	983				
			2	Structural Fill Below Structures (imported material)	35	cy	60.00	2,100				
			3	Pile Installation, 50 ton, 60 ft	1,920	lf	65.00	124,800				
				Slab on Grade - Backwash Tank								
			4	Formwork	395	sf	25.00	9,875				
			5	Rebar #6-12"OC EW/EF	5	ton	3,500.00	17,500				
			6	Waterstop	160	lf	15.00	2,400				
			7	Concrete Material	145	cy	190.00	27,550				
			8	Concrete Labor	145	cy	135.00	19,575				

CONSTRUCTION COST ESTIMATE

PROJECT: Central Valley Project	PREPARED BY: Regional Office, Sacramento, CA
DIVISION: West San Joaquin Division	ESTIMATE DATE: July 2007 (Revised after DEC)
UNIT: San Luis Unit -- Drainage System -- Westlands Water District-North	ESTIMATE TYPE: Feasibility
FEATURE: Drainage Feature Re-Evaluation Feasibility Study	PRICE LEVEL: April 2006

PROPERTY CLASS	IDENTIFIED PROPERTY	PLANT ACCOUNT	ITEM	DESCRIPTION	QUANTITY	UNIT	PRICE	AMOUNT	FIELD COST	TOTAL FIELD COST	NONCONTRACT COST	CONSTRUCTION COST
12	03			WWD NORTH Se BIOTREATMENT PLANT (continued)								
		130		STRUCTURES AND IMPROVEMENTS (continued)								
				(7) Backwash Tank (continued)								
			9	Concrete Liner Material	1,600	sf	10.00	16,000				
				Walls - Backwash Tank								
			10	Formwork	5,900	sf	25.00	147,500				
			11	Rebar #6-10""OC EW/EF	5	ton	3,500.00	17,500				
			12	Waterstop	150	lf	15.00	2,250				
			13	Concrete Material	220	cy	190.00	41,800				
			14	Concrete Labor	220	cy	135.00	29,700				
			15	Concrete Liner Material	2,550	sf	10.00	25,500				
			16	Mobilization (+/- 5%)				24,252				
			17	Unlisted Items (+/- 15%)				76,393				
			18	Allowance for Procurement Strategy (+/- 5%)				24,323				
				Subtotal				610,000				
				Contingencies (+/- 25%)				160,000				
				Field Cost - (7) Backwash Tank				770,000				
				(8) Feed Tank					240,000			
			1	Geotextile Fabric to Separate Native and Structural Fill	315	sf	0.50	158				
			2	Structural Fill Below Structures (imported material)	5	cy	60.00	300				
			3	Pile Installation, 50 ton, 60 ft	420	lf	65.00	27,300				
				Slab on Grade - Feed Tank								
			4	Formwork	160	sf	25.00	4,000				
			5	Rebar #6-12"OC EW/EF	1	ton	3,500.00	3,500				
			6	Waterstop	65	lf	15.00	975				
			7	Concrete Material	20	cy	190.00	3,800				
			8	Concrete Labor	20	cy	135.00	2,700				
			9	Concrete Liner Material	255	sf	10.00	2,550				
				Walls - Feed Tank								
			10	Formwork	2,260	sf	25.00	56,500				
			11	Rebar #6-10""OC EW/EF	3	ton	3,500.00	10,500				

CONSTRUCTION COST ESTIMATE

PROJECT: Central Valley Project	PREPARED BY: Regional Office, Sacramento, CA
DIVISION: West San Joaquin Division	ESTIMATE DATE: July 2007 (Revised after DEC)
UNIT: San Luis Unit -- Drainage System -- Westlands Water District-North	ESTIMATE TYPE: Feasibility
FEATURE: Drainage Feature Re-Evaluation Feasibility Study	PRICE LEVEL: April 2006

PROPERTY CLASS	IDENTIFIED PROPERTY	PLANT ACCOUNT	ITEM	DESCRIPTION	QUANTITY	UNIT	PRICE	AMOUNT	FIELD COST	TOTAL FIELD COST	NONCONTRACT COST	CONSTRUCTION COST
12	03			WWD NORTH Se BIOTREATMENT PLANT (continued)								
		130		STRUCTURES AND IMPROVEMENTS (continued)								
				(8) Feed Tank (continued)								
			12	Waterstop	60	lf	15.00	900				
			13	Concrete Material	65	cy	190.00	12,350				
			14	Concrete Labor	65	cy	135.00	8,775				
			15	Concrete Liner Material	1,000	sf	10.00	10,000				
			16	FRP Cover	255	sf	40.00	10,200				
			17	Mobilization (+/- 5%)				7,725				
			18	Unlisted Items (+/- 15%)				24,335				
			19	Allowance for Procurement Strategy (+/- 5%)				8,432				
				Subtotal				195,000				
				Contingencies (+/- 25%)				45,000				
				Field Cost - (8) Feed Tank				240,000				
				(9) Oxidation Tank					610,000			
			1	Geotextile Fabric to Separate Native and Structural Fill	1,135	sf	0.50	568				
			2	Structural Fill Below Structures (imported material)	20	cy	60.00	1,200				
			3	Pile Installation, 50 ton, 60 ft	1,440	lf	65.00	93,600				
				Slab on Grade - Oxidation Tank								
			4	Formwork	315	sf	25.00	7,875				
			5	Rebar #6-12"OC EW/EF	3	ton	3,500.00	10,500				
			6	Waterstop	125	lf	15.00	1,875				
			7	Concrete Material	95	cy	190.00	18,050				
			8	Concrete Labor	95	cy	135.00	12,825				
			9	Concrete Liner Material	1,135	sf	10.00	11,350				
				Walls - Oxidation Tank								
			10	Formwork	4,475	sf	25.00	111,875				
			11	Rebar #6-10""OC EW/EF	10	ton	3,500.00	35,000				
			12	Waterstop	120	lf	15.00	1,800				
			13	Concrete Material	180	cy	190.00	34,200				
			14	Concrete Labor	180	cy	135.00	24,300				

CONSTRUCTION COST ESTIMATE

PROJECT: Central Valley Project	PREPARED BY: Regional Office, Sacramento, CA
DIVISION: West San Joaquin Division	ESTIMATE DATE: July 2007 (Revised after DEC)
UNIT: San Luis Unit -- Drainage System -- Westlands Water District-North	ESTIMATE TYPE: Feasibility
FEATURE: Drainage Feature Re-Evaluation Feasibility Study	PRICE LEVEL: April 2006

PROPERTY CLASS	IDENTIFIED PROPERTY	PLANT ACCOUNT	ITEM	DESCRIPTION	QUANTITY	UNIT	PRICE	AMOUNT	FIELD COST	TOTAL FIELD COST	NONCONTRACT COST	CONSTRUCTION COST
12	03			WWD NORTH Se BIOTREATMENT PLANT (continued)								
		130		STRUCTURES AND IMPROVEMENTS (continued)								
				(9) Oxidation Tank (continued)								
			15	Concrete Liner Material	2,150	sf	10.00	21,500				
			16	Mobilization (+/- 5%)				19,326				
			17	Unlisted Items (+/- 15%)				60,877				
			18	Allowance for Procurement Strategy (+/- 5%)				23,280				
				Subtotal				490,000				
				Contingencies (+/- 25%)				120,000				
				Field Cost - (9) Oxidation Tank				610,000				
				(10) Biofilter - Odor Control Unit					250,000			
				Perimeter Slab for Stem								
			1	Formwork	750	sf	25.00	18,750				
			2	Rebar #5-6"OC EW	1	ton	3,500.00	3,500				
			3	Concrete Material	15	cy	190.00	2,850				
			4	Concrete Labor	15	cy	135.00	2,025				
				Perimeter Stem Wall								
			5	Formwork	1,250	sf	25.00	31,250				
			6	Rebar #5-12"OC EW	3	ton	3,500.00	10,500				
			7	Concrete Material	75	cy	190.00	14,250				
			8	Concrete Labor	75	cy	135.00	10,125				
			9	Geotextile, under pea gravel	140	sy	4.50	630				
			10	Pea Gravel	95	cy	60.00	5,700				
			11	Non-woven filter fabric	140	sy	9.00	1,260				
			12	Wood Chip, media	70	cy	45.00	3,150				
			13	Compost, media	70	cy	55.00	3,850				
			14	4" PVC, Sch 80, glued	150	lf	40.00	6,000				
			15	4" fittings, allocation	1	ls	1,500.00	1,500				
			16	2" PVC, Sch 80, glued	200	lf	30.00	6,000				
			17	2" fittings, allocation	1	ls	1,125.00	1,125				
			18	1" Poly irrigation hose	75	lf	8.00	600				

CONSTRUCTION COST ESTIMATE

PROJECT: Central Valley Project	PREPARED BY: Regional Office, Sacramento, CA
DIVISION: West San Joaquin Division	ESTIMATE DATE: July 2007 (Revised after DEC)
UNIT: San Luis Unit -- Drainage System -- Westlands Water District-North	ESTIMATE TYPE: Feasibility
FEATURE: Drainage Feature Re-Evaluation Feasibility Study	PRICE LEVEL: April 2006

PROPERTY CLASS	IDENTIFIED PROPERTY	PLANT ACCOUNT	ITEM	DESCRIPTION	QUANTITY	UNIT	PRICE	AMOUNT	FIELD COST	TOTAL FIELD COST	NONCONTRACT COST	CONSTRUCTION COST
12	03			WWD NORTH Se BIOTREATMENT PLANT (continued)								
		130		STRUCTURES AND IMPROVEMENTS (continued)								
				(10) Biofilter - Odor Control Unit (continued)								
			19	Sprinklers	8	ea	75.00	600				
			20	Non-freeze hose bibbs	2	ea	225.00	450				
			21	14" Fiberglass Duct Supply, yard	150	lf	170.00	25,500				
			22	Misc fittings and dampers, etc	1	ls	7,500.00	7,500				
			23	Mobilization (+/- 5%)				7,856				
			24	Unlisted Items (+/- 15%)				24,746				
			25	Allowance for Procurement Strategy (+/- 5%)				10,284				
				Subtotal				200,000				
				Contingencies (+/- 25%)				50,000				
				Field Cost - (10) Biofilter - Odor Control Unit				250,000				
				(11) Septic System					280,000			
			1	Pump Wetwell, 5' Dia	1	ea	2,700.00	2,700				
			2	Duplex chopper pump station	1	ea	11,250.00	11,250				
			3	Septic Tank, 2500 gal	1	ea	4,000.00	4,000				
			4	Distribution Box	1	ea	2,250.00	2,250				
			5	Drain Rock	1,470	cy	60.00	88,200				
			6	Supply Pipe, 4" Sch 80 PVC	250	ea	40.00	10,000				
			7	Drain Pipe, 4" perf.	660	lf	7.00	4,620				
			8	Filter Fabric	735	sy	9.00	6,615				
			9	Drain Rock	735	cy	60.00	44,100				

CONSTRUCTION COST ESTIMATE

PROJECT: Central Valley Project	PREPARED BY: Regional Office, Sacramento, CA
DIVISION: West San Joaquin Division	ESTIMATE DATE: July 2007 (Revised after DEC)
UNIT: San Luis Unit -- Drainage System -- Westlands Water District-North	ESTIMATE TYPE: Feasibility
FEATURE: Drainage Feature Re-Evaluation Feasibility Study	PRICE LEVEL: April 2006

PROPERTY CLASS	IDENTIFIED PROPERTY	PLANT ACCOUNT	ITEM	DESCRIPTION	QUANTITY	UNIT	PRICE	AMOUNT	FIELD COST	TOTAL FIELD COST	NONCONTRACT COST	CONSTRUCTION COST
12	03			WWD NORTH Se BIOTREATMENT PLANT (continued)								
		130		STRUCTURES AND IMPROVEMENTS (continued)								
				(11) Septic System (continued)								
			10	Mobilization (+/- 5%)				8,687				
			11	Unlisted Items (+/- 15%)				27,363				
			12	Allowance for Procurement Strategy (+/- 5%)				10,215				
				Subtotal				220,000				
				Contingencies (+/- 25%)				60,000				
				Field Cost - (11) Septic System				280,000				
				Field Cost - Structure and Improvements				13,450,000				
		152		Waterways					5,730,000			
				(1) BioReactor Internals					4,700,000			
				6" Concrete Filled PVC Piers								
			1	Sch 80 PVC Pipe	280	lf	50.00	14,000				
			2	Concrete and Placement	2	cy	1,000.00	2,000				
			3	GRC Panel	2,050	sf	20.00	41,000				
			4	Bottom Nozzles	4,530	lf	6.00	27,180				
			5	Concrete Topping Slab	40	sf	525.00	21,000				
			6	4" Filtrate Lateral, HDPE w/ orifice holes at 3'8"OC, incl supports	610	lf	40.00	24,400				
			7	4" Pipe link seal, 6" hole + sleeve	16	ea	520.00	8,320				
			8	18" Backwash Pipe, HDPE	80	lf	165.00	13,200				
			9	18" Pipe link seal, 24" hole + sleeve	16	ea	1,700.00	27,200				
			10	14" Backwash Discharge, perforated, HDPE	290	lf	170.00	49,300				
			11	14" Pipe link seal, 18" hole + sleeve	16	ea	1,100.00	17,600				
			12	6" Feed Pipe, HDPE	120	lf	50.00	6,000				
			13	6" Fittings, Straight Ts, Red. Ts, elbows (typ), HDPE	24	ea	285.00	6,840				
			14	6" Pipe link seal, 10" hole, HDPE	4	ea	405.00	1,620				
			15	4" Feed Pipe, perforated, HDPE	600	lf	45.00	27,000				
			16	4" Fittings, Straight Ts, Red. Ts, elbows (typ), HDPE	16	ea	150.00	2,400				

CONSTRUCTION COST ESTIMATE

PROJECT: Central Valley Project	PREPARED BY: Regional Office, Sacramento, CA
DIVISION: West San Joaquin Division	ESTIMATE DATE: July 2007 (Revised after DEC)
UNIT: San Luis Unit -- Drainage System -- Westlands Water District-North	ESTIMATE TYPE: Feasibility
FEATURE: Drainage Feature Re-Evaluation Feasibility Study	PRICE LEVEL: April 2006

PROPERTY CLASS	IDENTIFIED PROPERTY	PLANT ACCOUNT	ITEM	DESCRIPTION	QUANTITY	UNIT	PRICE	AMOUNT	FIELD COST	TOTAL FIELD COST	NONCONTRACT COST	CONSTRUCTION COST
12	03			WWD NORTH Se BIOTREATMENT PLANT (continued)								
		152		Waterways (continued)								
				(1) BioReactor Internals (continued)								
			17	Media	1,650,000	lbs	0.60	990,000				
			18	Media Installation	1,650,000	lbs	0.10	165,000				
			19	FRP Cover	4	ea	15,000.00	60,000				
			20	AB Met Inoculums, installed	415,000	gal	3.50	1,452,500				
			21	Mobilization (+/- 5%)				147,828				
			22	Unlisted Items (+/- 15%)				465,658				
			23	Allowance for Procurement Strategy (+/- 5%)				129,954				
				Subtotal				3,700,000				
				Contingencies (+/- 25%)				1,000,000				
				Field Cost - (1) BioReactor Internals				4,700,000				
				(2) Filter Mechanical - In Pipe Gallery					500,000			
				Feed, Recirculate, and Filtrate								
			1	4" Piping, PVC Piping	120	lf	40.00	4,800				
			2	4" Fittings, Ts, Elbows, Van Stone Flanges, etc	48	ea	150.00	7,200				
			3	4" Valves, butterfly geared manual actuator	24	ea	675.00	16,200				
			4	6" Piping, PVC Piping	120	lf	65.00	7,800				
			5	6" Fittings, Ts, Elbows, Van Stone Flanges, etc	48	ea	285.00	13,680				
			6	6" Valves, butterfly geared manual actuator, typ for check valves	6	ea	1,000.00	6,000				
			7	6" PVC Swing Check Valves	6	ea	2,250.00	13,500				
			8	6" Valves, butterfly pneunm. act. - bw, feed, filtrate return, filtrate	10	ea	2,100.00	21,000				
			9	6" Magnetic Flowmeters	2	ea	7,500.00	15,000				
			10	pH/ORP Sensor Assemblies (sensor, piping, valving, tap)	8	ea	1,800.00	14,400				
			11	Pressure Gauge on Diaphragm, assembly	4	ea	770.00	3,080				
			12	Pressure Transmitters on Diaphragm, assembly	12	ea	3,000.00	36,000				
			13	Static Mixers, 6" dia, sch 80 PVC, w/ injection port	4	ea	2,500.00	10,000				
			14	1/2" dia magnetic flow meter	4	ea	2,600.00	10,400				
			15	Misc 1/2" hardware: solenoid, globe, ball check	4	ea	1,125.00	4,500				
			16	2" Air Release Valves	4	ea	1,400.00	5,600				

CONSTRUCTION COST ESTIMATE

PROJECT: Central Valley Project	PREPARED BY: Regional Office, Sacramento, CA
DIVISION: West San Joaquin Division	ESTIMATE DATE: July 2007 (Revised after DEC)
UNIT: San Luis Unit -- Drainage System -- Westlands Water District-North	ESTIMATE TYPE: Feasibility
FEATURE: Drainage Feature Re-Evaluation Feasibility Study	PRICE LEVEL: April 2006

PROPERTY CLASS	IDENTIFIED PROPERTY	PLANT ACCOUNT	ITEM	DESCRIPTION	QUANTITY	UNIT	PRICE	AMOUNT	FIELD COST	TOTAL FIELD COST	NONCONTRACT COST	CONSTRUCTION COST
12	03			WWD NORTH Se BIOTREATMENT PLANT (continued)								
		152		Waterways (continued)								
				(2) Filter Mechanical - In Pipe Gallery (continued)								
				Backwash Supply and Waste Piping								
			17	18" Dia Pneumatic BF Valve, lug	4	ea	11,500.00	46,000				
			18	18" Dia Pipe HDPE	60	lf	100.00	6,000				
			19	18" Dia Fittings	12	ea	1,700.00	20,400				
			20	14" Backwash Waste	120	lf	75.00	9,000				
			21	14" Valves	8	ea	2,400.00	19,200				
			22	14" Fittings	16	ea	1,000.00	16,000				
			23	Foul Air, 8" FRP	100	ea	100.00	10,000				
			24	Mobilization (+/- 5%)				15,788				
			25	Unlisted Items (+/- 15%)				49,732				
			26	Allowance for Procurement Strategy (+/- 5%)				18,720				
				Subtotal				400,000				
				Contingencies (+/- 25%)				100,000				
				Field Cost - (2) Filter Mechanical - In Pipe Gallery				500,000				
				(3) Mechanical Room and Piping Gallery					290,000			
			1	Blower Piping, 6" 304 SS Sch 10 (incl yard piping)	140	lf	165.00	23,100				
			2	6" 304 SS Fittings	10	ea	1,050.00	10,500				
			3	6" BF Valve, Ductile Iron w/ Stainless Internals	2	ea	600.00	1,200				
			4	Feed Piping, 8"	140	lf	60.00	8,400				
			5	8" Fittings	10	ea	285.00	2,850				
			6	Filtrate Piping, 8"	140	lf	60.00	8,400				
			7	8" Fittings	10	ea	2,100.00	21,000				
			8	Backwash Supply, dual 18" on each side on each side of pipe gallery	144	lf	100.00	14,400				
			9	Backwash Piping, 18"	60	lf	100.00	6,000				
			10	18" Fittings	6	ea	1,800.00	10,800				
			11	Backwash Waste, dual 24" on each side on each side of pipe gallery	294	lf	145.00	42,630				
			12	Nutrient Feed Loop	196	lf	40.00	7,840				
			13	24" Fiberglass Duct Supply	147	lf	170.00	24,990				

CONSTRUCTION COST ESTIMATE

PROJECT: Central Valley Project	PREPARED BY: Regional Office, Sacramento, CA
DIVISION: West San Joaquin Division	ESTIMATE DATE: July 2007 (Revised after DEC)
UNIT: San Luis Unit -- Drainage System -- Westlands Water District-North	ESTIMATE TYPE: Feasibility
FEATURE: Drainage Feature Re-Evaluation Feasibility Study	PRICE LEVEL: April 2006

PROPERTY CLASS	IDENTIFIED PROPERTY	PLANT ACCOUNT	ITEM	DESCRIPTION	QUANTITY	UNIT	PRICE	AMOUNT	FIELD COST	TOTAL FIELD COST	NONCONTRACT COST	CONSTRUCTION COST
12	03			WWD NORTH Se BIOTREATMENT PLANT (continued)								
		152		Waterways (continued)								
				(3) Mechanical Room and Piping Gallery (continued)								
			14	Mobilization (+/- 5%)				9,106				
			15	Unlisted Items (+/- 15%)				28,682				
			16	Allowance for Procurement Strategy (+/- 5%)				10,102				
				Subtotal				230,000				
				Contingencies (+/- 25%)				60,000				
				Field Cost - (3) Mechanical Room and Piping Gallery				290,000				
				(4) Other Mechanical Room					240,000			
				Backwash Supply								
			1	18" Magnetic Flow Meter	1	ea	30,000.00	30,000				
			2	Pressure Gauge Assemblies	4	ea	770.00	3,080				
			3	Pressure Transmitter Assemblies	1	ea	3,000.00	3,000				
			4	Backwash Strainer DPIT Assembly	1	ea	3,000.00	3,000				
			5	24" Backwash Tank Isolation Valve, geared/manual	1	ea	3,000.00	3,000				
			6	18" butterfly valves, geared / manual	2	ea	11,500.00	23,000				
			7	18" check valve	1	ea	20,000.00	20,000				
			8	Backwash Strainer (18"), allocation	1	ea	25,000.00	25,000				
			9	Dissolved Oxygen Sensors, Oxidation Tanks	1	ea	8,500.00	8,500				
				Backwash Clarifier								
			10	Pressure Gauge Assemblies	2	ea	770.00	1,540				
			11	Pressure Transmitter Assemblies	2	ea	3,000.00	6,000				
			12	High level float switch	2	ea	400.00	800				
			13	4" PVC Swing Check Valves	1	ea	2,250.00	2,250				
			14	4" Eccentric Plug Valves	9	ea	520.00	4,680				
				Nutrient Feed System								
			15	High level float switch	1	ea	400.00	400				
			16	Ultrasonic Level Sensor/Transmitter	1	ea	1,200.00	1,200				
			17	Globe Valves, 3"	7	ea	450.00	3,150				
			18	Pressure Gauge Assemblies	1	ea	770.00	770				

CONSTRUCTION COST ESTIMATE

PROJECT: Central Valley Project	PREPARED BY: Regional Office, Sacramento, CA
DIVISION: West San Joaquin Division	ESTIMATE DATE: July 2007 (Revised after DEC)
UNIT: San Luis Unit -- Drainage System -- Westlands Water District-North	ESTIMATE TYPE: Feasibility
FEATURE: Drainage Feature Re-Evaluation Feasibility Study	PRICE LEVEL: April 2006

PROPERTY CLASS	IDENTIFIED PROPERTY	PLANT ACCOUNT	ITEM	DESCRIPTION	QUANTITY	UNIT	PRICE	AMOUNT	FIELD COST	TOTAL FIELD COST	NONCONTRACT COST	CONSTRUCTION COST
12	03			WWD NORTH Se BIOTREATMENT PLANT (continued)								
		152		Waterways (continued)								
				(4) Other Mechanical Room (continued)								
			19	High Pressure Relief Valves	2	ea	1,125.00	2,250				
				Drain Sump								
			20	High level float switch	1	ea	400.00	400				
			21	Ultrasonic Level Sensor/Transmitter	1	ea	1,200.00	1,200				
			22	4" PVC Swing Check Valves	2	ea	2,250.00	4,500				
			23	4" Butterfly valves	2	ea	400.00	800				
			24	Mobilization (+/- 5%)				7,426				
			25	Unlisted Items (+/- 15%)				23,392				
			26	Allowance for Procurement Strategy (+/- 5%)				10,662				
				Subtotal				190,000				
				Contingencies (+/- 25%)				50,000				
				Field Cost - (4) Other Mechanical Room				240,000				
				Field Cost - Waterways				5,730,000				
		160		Pumps and Prime Movers					900,000			
				Mechanical Building - Equipment								
			1	Backwash Pump, 8960 gpm	2	ea	90,000.00	180,000				
			2	125 HP VFD, custom engineered	2	ea	30,000.00	60,000				
			3	Installation, +/- 30% of above	1	ls	72,000.00	72,000				
			4	Feed Pumps, 285 gpm	2	ea	11,000.00	22,000				
			5	Installation, +/- 30% of above	1	ls	6,600.00	6,600				
			6	Nutrient Pumps, 5 gpm	1	ea	7,500.00	7,500				
			7	Installation, +/- 30% of above	1	ls	2,250.00	2,250				
			8	Recycle Pumps, 350 gpm	8	ea	12,500.00	100,000				
			9	Installation, +/- 30% of above	1	ls	30,000.00	30,000				

CONSTRUCTION COST ESTIMATE

PROJECT: Central Valley Project	PREPARED BY: Regional Office, Sacramento, CA
DIVISION: West San Joaquin Division	ESTIMATE DATE: July 2007 (Revised after DEC)
UNIT: San Luis Unit -- Drainage System -- Westlands Water District-North	ESTIMATE TYPE: Feasibility
FEATURE: Drainage Feature Re-Evaluation Feasibility Study	PRICE LEVEL: April 2006

PROPERTY CLASS	IDENTIFIED PROPERTY	PLANT ACCOUNT	ITEM	DESCRIPTION	QUANTITY	UNIT	PRICE	AMOUNT	FIELD COST	TOTAL FIELD COST	NONCONTRACT COST	CONSTRUCTION COST
12	03			WWD NORTH Se BIOTREATMENT PLANT (continued)								
		160		Pumps and Prime Movers (continued)								
			10	Clarifier Sludge/Decant Pump, 300 gpm	1	ea	20,000.00	20,000				
			11	5 HP VFD, custom engineered	1	ea	7,000.00	7,000				
			12	Installation, +/- 30% of above	1	ls	8,100.00	8,100				
			13	Drain Pumps, duplex submersible package w/ control panel	2	ea	20,000.00	40,000				
			14	Installation, +/- 30% of above	1	ls	12,000.00	12,000				
			15	Mobilization (+/- 5%)				28,373				
			16	Unlisted Items (+/- 15%)				89,373				
			17	Allowance for Procurement Strategy (+/- 5%)				34,804				
				Subtotal				720,000				
				Contingencies (+/- 25%)				180,000				
				Field Cost - Pumps and Prime Movers				900,000				
		170		Accessory Electrical Equipment					400,000			
				Electrical, associated with process mechanical								
			1	MCCs, VFDs, and Distribution Panels, per supplier quote	1	ls	140,000.00	140,000				
			2	Inst of elec eq including terminations, tax, subcntrctr OH&P, +/- 50% of above	1	ls	70,000.00	70,000				
			3	Mechanical Bldg conduit to process motors	540	lf	25.00	13,500				
			4	Pipe Gallery, conduit to process motors	120	lf	25.00	3,000				
			5	Solids Process Building, conduit to motors	150	lf	25.00	3,750				
			6	Yard conduit	1,000	lf	25.00	25,000				
			7	Mobilization (+/- 5%)				12,763				
			8	Unlisted Items (+/- 15%)				40,202				
			9	Allowance for Procurement Strategy (+/- 5%)				11,786				
				Subtotal				320,000				
				Contingencies (+/- 25%)				80,000				
				Field Cost - Accessory Electrical Equipment				400,000				

CONSTRUCTION COST ESTIMATE

PROJECT: Central Valley Project	PREPARED BY: Regional Office, Sacramento, CA
DIVISION: West San Joaquin Division	ESTIMATE DATE: July 2007 (Revised after DEC)
UNIT: San Luis Unit -- Drainage System -- Westlands Water District-North	ESTIMATE TYPE: Feasibility
FEATURE: Drainage Feature Re-Evaluation Feasibility Study	PRICE LEVEL: April 2006

PROPERTY CLASS	IDENTIFIED PROPERTY	PLANT ACCOUNT	ITEM	DESCRIPTION	QUANTITY	UNIT	PRICE	AMOUNT	FIELD COST	TOTAL FIELD COST	NONCONTRACT COST	CONSTRUCTION COST
12	03			WWD NORTH Se BIOTREATMENT PLANT (continued)								
		180		Installed Supervisory Control Equipment					700,000			
			1	System Design	1	ls	22,500.00	22,500				
				Conduit and Wire, per pair of two trainsl (all 1") - installed								
			2	Flex cndt,from ea device to J box, I&C power (1 point ea)	300	lf	25.00	7,500				
			3	Flex cndt,from ea device to J box, signal (1 point ea)	300	lf	25.00	7,500				
			4	Rgd cndt,from ea device to J box, I&C power (4 pts/cmn. conduit)	1,725	lf	25.00	43,125				
			5	Rgd cndt,from ea device to J box, signal (4 pts/common conduit)	1,725	lf	25.00	43,125				
				Conduit and Wire, trunk lines - gallery to control room (all 2")								
			6	Rigid conduit, I&C power	120	lf	25.00	3,000				
			7	Rigid conduit, signal	120	lf	25.00	3,000				
				Conduit and Wire, Mechanical Room (all 1" assumed) all installed								
			8	Flex cndt,from ea device to jnctn box,I&C power (1 pnt ea)	500	lf	25.00	12,500				
			9	Flex cndt,from ea device to jnctn box,signal (1 pnt ea)	500	lf	25.00	12,500				
			10	Rigid conduit, I&C power	500	lf	25.00	12,500				
			11	Rigid conduit, signal	500	lf	25.00	12,500				
			12	Rigid conduit, I&C power trunk	60	lf	25.00	1,500				
			13	Rigid conduit, signal trunk mech bldg	60	lf	25.00	1,500				
			14	Rigid conduit, signal trunk solids dewatering	150	lf	25.00	3,750				
			15	PLC Cabinet (dual proc's, 6' panel, 10" Color HMI, batt bckp), inst	1	ea	110,000.00	110,000				
			16	Remote I/O Racks, installed	1	ea	22,500.00	22,500				
			17	Desktop PC and Switch in Admin Bldg	1	ea	12,000.00	12,000				
			18	Terminations	50	hr	120.00	6,000				
				Testing (team of two tech's)								
			19	Continuity Testing	80	hr	120.00	9,600				
			20	Loop Testing	30	hr	120.00	3,600				
			21	Signal Conditioning and tagging	30	hr	120.00	3,600				
			22	Programming (Allocation)	1	ls	90,000.00	90,000				

CONSTRUCTION COST ESTIMATE

PROJECT: Central Valley Project	PREPARED BY: Regional Office, Sacramento, CA
DIVISION: West San Joaquin Division	ESTIMATE DATE: July 2007 (Revised after DEC)
UNIT: San Luis Unit -- Drainage System -- Westlands Water District-North	ESTIMATE TYPE: Feasibility
FEATURE: Drainage Feature Re-Evaluation Feasibility Study	PRICE LEVEL: April 2006

PROPERTY CLASS	IDENTIFIED PROPERTY	PLANT ACCOUNT	ITEM	DESCRIPTION	QUANTITY	UNIT	PRICE	AMOUNT	FIELD COST	TOTAL FIELD COST	NONCONTRACT COST	CONSTRUCTION COST
12	03			WWD NORTH Se BIOTREATMENT PLANT (continued)								
		180		Installed Supervisory Control Equipment (continued)								
			23	Mobilization (+/- 5%)				22,190				
			24	Unlisted Items (+/- 15%)				69,899				
			25	Allowance for Procurement Strategy (+/- 5%)				24,112				
				Subtotal				560,000				
				Contingencies (+/- 25%)				140,000				
				Field Cost - Installed Supervisory Control Equipment				700,000				
				FACILITATING SERVICES (2%)								
				INVESTIGATIONS (3%)								
				DESIGNS & SPECIFICATIONS (10%)								
				CONSTRUCTION SUPERVISION (12%)								
				OTHER COSTS (+/- 27%)							5,810,000	

CONSTRUCTION COST ESTIMATE

PROJECT: Central Valley Project	PREPARED BY: Regional Office, Sacramento, CA
DIVISION: West San Joaquin Division	ESTIMATE DATE: July 2007 (Revised after DEC)
UNIT: San Luis Unit -- Drainage System -- Westlands Water District-North	ESTIMATE TYPE: Feasibility
FEATURE: Drainage Feature Re-Evaluation Feasibility Study	PRICE LEVEL: April 2006

PROPERTY CLASS	IDENTIFIED PROPERTY	PLANT ACCOUNT	ITEM	DESCRIPTION	QUANTITY	UNIT	PRICE	AMOUNT	FIELD COST	TOTAL FIELD COST	NONCONTRACT COST	CONSTRUCTION COST
12	04			WWD NORTH - EVAPORATION PONDS - Ponds will occupy a total						71,182,000	18,818,000	90,000,000
				area of 220 acres. There will be one terminal cell initially, with new								
				terminal cells to follow in 12.5, 25, and 37.5 years respectfully.								
				(1) INITIAL POND CONSTRUCTION						54,592,000	14,408,000	69,000,000
		100		Land and Rights					1,050,000			
			1	Seasonal Crop Land - Fee	205	Ac	4,000.00	820,000				
			2	Undeveloped Land - Fee	15	Ac	2,100.00	31,500				
			3	Unlisted Items (+/- 5%)				70,000				
				Subtotal				890,000				
				Contingencies (+/- 15%)				160,000				
				Field Cost - Land and Rights				1,050,000				
		130		Structures and Improvements					3,700,000			
				General Site Preparation								
			1	Removal of gravel/dirt roadway 24'x3'x1725'; spread waste on site	4,600	cy	3.00	13,800				
				Perimeter Fence								
			2	Chain link - 6ft w/3 strands barbed wire	13,800	lf	30.00	414,000				
			3	Gates - 20 ft wide	4	ea	1,550.00	6,200				
				Steel Maintenance Building								
			4	Concrete foundation slab - 20'x40'x2	60	cy	1,000.00	60,000				
			5	Type V cement	20	ton	170.00	3,400				
			6	Reinforcement	9,000	lb	1.75	15,750				
			7	Pre-fab 800sf steel building	1	ea	27,000.00	27,000				
				Monitoring Well:								
			8	Furnish and Install Monitoring Wells - D=2"; Depth=60', encased	10	ea	7,000.00	70,000				
				Perimeter Drains:								
			9	Excavation for interceptor trench - 2'x7'x28,750'	14,910	cy	4.50	67,095				
			10	F&I Sand filter material (30 mile haul)	10,650	cy	60.00	639,000				
			11	F&I Gravel drain material (30 mile haul) - 4 sf /ft for 8" drain pipe	4,260	cy	70.00	298,200				
			12	F&I 8" dia PVC slotted drain pipe	28,750	lf	20.00	575,000				
			13	Excavation for waste trench	14,910	cy	3.00	44,730				

CONSTRUCTION COST ESTIMATE

PROJECT: Central Valley Project	PREPARED BY: Regional Office, Sacramento, CA
DIVISION: West San Joaquin Division	ESTIMATE DATE: July 2007 (Revised after DEC)
UNIT: San Luis Unit -- Drainage System -- Westlands Water District-North	ESTIMATE TYPE: Feasibility
FEATURE: Drainage Feature Re-Evaluation Feasibility Study	PRICE LEVEL: April 2006

PROPERTY CLASS	IDENTIFIED PROPERTY	PLANT ACCOUNT	ITEM	DESCRIPTION	QUANTITY	UNIT	PRICE	AMOUNT	FIELD COST	TOTAL FIELD COST	NONCONTRACT COST	CONSTRUCTION COST
12	04			WWD NORTH - EVAPORATION PONDS (continued)								
				(1) INITIAL POND CONSTRUCTION (continued)								
		130		Structures and Improvements (continued)								
			14	Inspection/Cleanout/Sump Manhole - D=5'xH=8' - FRP preformed	25	ea	10,000.00	250,000				
			15	Inspection/Cleanout/Sump Manhole - D=5'xH=12' - FRP preformed	11	ea	12,000.00	132,000				
			16	Return Flow Pump - D=4"; TDH=20'; w/ auto on/off	36	ea	500.00	18,000				
			17	Mobilization (+/- 5%)				131,709				
			18	Unlisted Items (+/- 10%)				234,116				
				Subtotal				3,000,000				
				Contingencies (+/- 20%)				700,000				
				Field Cost - Structures and Improvements				3,700,000				
		150		Reservoirs					10,500,000			
				Liners for Concentration Cells								
				Furnish and Install Geomembrane Liner - 560,000 SY								
			1	F&I 40 mil thick LDPE liner - 560,000 SY	560,000	sy	6.50	3,640,000				
			2	Excavation - Top 20" and stockpile	311,000	cy	3.00	933,000				
			3	Prep surface for LDPE liner	560,000	sy	0.15	84,000				
			4	Place from stockpile and compact (10% Loss)	280,000	cy	10.00	2,800,000				
			5	Mobilization (+/- 5%)				372,850				
			6	Unlisted Items (+/- 10%)				770,150				
				Subtotal				8,600,000				
				Contingencies (+/- 20%)				1,900,000				
				Field Cost - Reservoirs				10,500,000				

CONSTRUCTION COST ESTIMATE

PROJECT: Central Valley Project	PREPARED BY: Regional Office, Sacramento, CA
DIVISION: West San Joaquin Division	ESTIMATE DATE: July 2007 (Revised after DEC)
UNIT: San Luis Unit -- Drainage System -- Westlands Water District-North	ESTIMATE TYPE: Feasibility
FEATURE: Drainage Feature Re-Evaluation Feasibility Study	PRICE LEVEL: April 2006

PROPERTY CLASS	IDENTIFIED PROPERTY	PLANT ACCOUNT	ITEM	DESCRIPTION	QUANTITY	UNIT	PRICE	AMOUNT	FIELD COST	TOTAL FIELD COST	NONCONTRACT COST	CONSTRUCTION COST
12	04			WWD NORTH - EVAPORATION PONDS (continued)								
				(1) INITIAL POND CONSTRUCTION (continued)								
		152		Waterways					35,000,000			
				Sheetpile Embankment Dikes (includes 1 terminal cell):								
			1	Perimeter walls, 13,700'x20' long, furnish and drive 10 ft	274,000	sf	16.00	4,384,000				
			2	Interior walls, 15,000'x20' long, furnish and drive 10 ft	300,000	sf	16.00	4,800,000				
			3	Compacted embankment, furnish and place	751,000	cy	15.00	11,265,000				
			4	Scarify footprint (12" disc)	143,000	sy	1.00	143,000				
			5	Excavate compacted embankment	366,300	cy	10.00	3,663,000				
			6	Waste on site	366,300	cy	3.00	1,098,900				
			7	Mobilization (+/- 5%)				1,267,695				
			8	Unlisted Items (+/- 10%)				2,378,405				
				Subtotal				29,000,000				
				Contingencies (+/- 20%)				6,000,000				
				Field Cost - Waterways				35,000,000				
		153		Waterway Structures					4,300,000			
				Gate Structure (23 ea)								
			1	Reinforced Concrete 81 CY each gate	1,865	cy	1,000.00	1,865,000				
			2	Cast in place - type V cement	625	ton	170.00	106,250				
			3	Epoxy coated reinforcement assumed	280,000	lb	2.00	560,000				
			4	Stoplogs - 1 set = 4 stoplogs, Avg 2.5ft x 12ft x 4in	92	set	1,000.00	92,000				
				Furnish and Lay the following smooth double wall HDPE Pipe:								
			5	24 in dia. - 20 ft long	23	ea	1,500.00	34,500				

CONSTRUCTION COST ESTIMATE

PROJECT: Central Valley Project	PREPARED BY: Regional Office, Sacramento, CA
DIVISION: West San Joaquin Division	ESTIMATE DATE: July 2007 (Revised after DEC)
UNIT: San Luis Unit -- Drainage System -- Westlands Water District-North	ESTIMATE TYPE: Feasibility
FEATURE: Drainage Feature Re-Evaluation Feasibility Study	PRICE LEVEL: April 2006

PROPERTY CLASS	IDENTIFIED PROPERTY	PLANT ACCOUNT	ITEM	DESCRIPTION	QUANTITY	UNIT	PRICE	AMOUNT	FIELD COST	TOTAL FIELD COST	NONCONTRACT COST	CONSTRUCTION COST
12	04			WWD NORTH - EVAPORATION PONDS (continued)								
				(1) INITIAL POND CONSTRUCTION (continued)								
		153		Waterway Structures (continued)								
				Sheet Pile Diversion Walls								
			6	1650'x18' long, furnish and drive 10 ft	29,700	sf	16.00	475,200				
			7	Mobilization (+/- 5%)				156,648				
			8	Unlisted Items (+/- 10%)				310,403				
				Subtotal				3,600,000				
				Contingencies (+/- 20%)				700,000				
				Field Cost - Waterway Structures				4,300,000				
		199		Miscellaneous Installed Equipment					42,000			
			1	Mobile Emergency Pump - THD=20'; pump & hose mobile-on skids	2	ea	15,000.00	30,000				
			2	Mobilization (+/- 5%)				1,500				
			3	Unlisted Items (+/- 10%)				3,500				
				Subtotal				35,000				
				Contingencies (+/- 20%)				7,000				
				Field Cost - Miscellaneous Installed Equipment				42,000				
				FACILITATING SERVICES (2%)								
				INVESTIGATIONS (3%)								
				DESIGNS & SPECIFICATIONS (10%)								
				CONSTRUCTION SUPERVISION (12%)								
				OTHER COSTS (+/- 27%)							14,408,000	

CONSTRUCTION COST ESTIMATE

PROJECT: Central Valley Project	PREPARED BY: Regional Office, Sacramento, CA
DIVISION: West San Joaquin Division	ESTIMATE DATE: July 2007 (Revised after DEC)
UNIT: San Luis Unit -- Drainage System -- Westlands Water District-North	ESTIMATE TYPE: Feasibility
FEATURE: Drainage Feature Re-Evaluation Feasibility Study	PRICE LEVEL: April 2006

PROPERTY CLASS	IDENTIFIED PROPERTY	PLANT ACCOUNT	ITEM	DESCRIPTION	QUANTITY	UNIT	PRICE	AMOUNT	FIELD COST	TOTAL FIELD COST	NONCONTRACT COST	CONSTRUCTION COST
12	04			WWD NORTH - EVAPORATION PONDS (continued)								
				(2) FUTURE ADDITIONAL TERMINAL CELL - 12.5 YEARS LATER						5,530,000	1,470,000	7,000,000
		100		Land and Rights								
				Costs of Land and Rights have been included with Initial Construction.								
		130		Structures and Improvements					230,000			
				Perimeter Drains:								
			1	Excavation for interceptor trench - 2'x7'x2,350'	1,220	cy	4.50	5,490				
			2	F&I Sand filter material (30 mile haul)	870	cy	60.00	52,200				
			3	F&I Gravel drain material (30 mile haul) - 4 sf /ft for 8" drain pipe	348	cy	70.00	24,360				
			4	F&I 8" dia PVC slotted drain pipe	2,350	lf	20.00	47,000				
			5	Excavation for waste trench	1,220	cy	3.00	3,660				
			6	Inspection/Cleanout Manhole - D=5'xH=8' - FRP preformed	3	ea	10,000.00	30,000				
			7	Return Flow Pump - D=4"; TDH=20'; w/ auto on/off	3	ea	500.00	1,500				
			8	Mobilization (+/- 5%)				8,211				
			9	Unlisted Items (+/- 10%)				17,580				
				Subtotal				190,000				
				Contingencies (+/- 20%)				40,000				
				Field Cost - Structures and Improvements				230,000				
		150		Reservoirs					1,600,000			
				Liners for Concentration Cells								
				Furnish and Install Geomembrane Liner - 88,000 SY								
			1	F&I 40 mil thick LDPE liner - 88,000 SY	88,000	sy	6.50	572,000				
			2	Excavation - Top 20" and stockpile	48,700	cy	3.00	146,100				
			3	Prep surface for LDPE liner	88,000	sy	0.15	13,200				
			4	Place from stockpile and compact (10% Loss)	43,800	cy	10.00	438,000				
			5	Mobilization (+/- 5%)				58,465				

CONSTRUCTION COST ESTIMATE

PROJECT: Central Valley Project	PREPARED BY: Regional Office, Sacramento, CA
DIVISION: West San Joaquin Division	ESTIMATE DATE: July 2007 (Revised after DEC)
UNIT: San Luis Unit -- Drainage System -- Westlands Water District-North	ESTIMATE TYPE: Feasibility
FEATURE: Drainage Feature Re-Evaluation Feasibility Study	PRICE LEVEL: April 2006

PROPERTY CLASS	IDENTIFIED PROPERTY	PLANT ACCOUNT	ITEM	DESCRIPTION	QUANTITY	UNIT	PRICE	AMOUNT	FIELD COST	TOTAL FIELD COST	NONCONTRACT COST	CONSTRUCTION COST
12	04			WWD NORTH - EVAPORATION PONDS (continued)								
				(2) FUTURE ADDITIONAL TERMINAL CELL - 12.5 YEARS (continued)								
		150		Reservoirs (continued)								
			6	Unlisted Items (+/- 10%)				122,235				
				Subtotal				1,350,000				
				Contingencies (+/- 20%)				250,000				
				Field Cost - Reservoirs				1,600,000				
		152		Waterways					3,700,000			
				Sheetpile Embankment Dikes for one additional terminal cell:								
			1	Perimeter walls, 2,350'x20' long, furnish and drive 10 ft	47,000	sf	16.00	752,000				
			2	Compacted embankment, furnish and place	88,000	cy	15.00	1,320,000				
			3	Scarify footprint (12" disc)	15,600	sy	1.00	15,600				
			4	Excavate compacted embankment	43,350	cy	10.00	433,500				
			5	Waste on site	43,350	cy	3.00	130,050				
			6	Mobilization (+/- 5%)				132,558				
			7	Unlisted Items (+/- 10%)				216,293				
				Subtotal				3,000,000				
				Contingencies (+/- 20%)				700,000				
				Field Cost - Waterways				3,700,000				
				FACILITATING SERVICES (2%)								
				INVESTIGATIONS (3%)								
				DESIGNS & SPECIFICATIONS (10%)								
				CONSTRUCTION SUPERVISION (12%)								
				OTHER COSTS (+/- 27%)							1,470,000	

CONSTRUCTION COST ESTIMATE

PROJECT: Central Valley Project	PREPARED BY: Regional Office, Sacramento, CA
DIVISION: West San Joaquin Division	ESTIMATE DATE: July 2007 (Revised after DEC)
UNIT: San Luis Unit -- Drainage System -- Westlands Water District-North	ESTIMATE TYPE: Feasibility
FEATURE: Drainage Feature Re-Evaluation Feasibility Study	PRICE LEVEL: April 2006

PROPERTY CLASS	IDENTIFIED PROPERTY	PLANT ACCOUNT	ITEM	DESCRIPTION	QUANTITY	UNIT	PRICE	AMOUNT	FIELD COST	TOTAL FIELD COST	NONCONTRACT COST	CONSTRUCTION COST
12	04			WWD NORTH - EVAPORATION PONDS (continued)								
				(3) FUTURE ADDITIONAL TERMINAL CELL - 25 YEARS LATER						5,530,000	1,470,000	7,000,000
		100		Land and Rights								
				Costs of Land and Rights have been included with Initial Construction.								
		130		Structures and Improvements					230,000			
				Perimeter Drains:								
			1	Excavation for interceptor trench - 2'x7'x2,350'	1,220	cy	4.50	5,490				
			2	F&I Sand filter material (30 mile haul)	870	cy	60.00	52,200				
			3	F&I Gravel drain material (30 mile haul) - 4 sf /ft for 8" drain pipe	348	cy	70.00	24,360				
			4	F&I 8" dia PVC slotted drain pipe	2,350	lf	20.00	47,000				
			5	Excavation for waste trench	1,220	cy	3.00	3,660				
			6	Inspection/Cleanout Manhole - D=5'xH=8' - FRP preformed	3	ea	10,000.00	30,000				
			7	Return Flow Pump - D=4"; TDH=20'; w/ auto on/off	3	ea	500.00	1,500				
			8	Mobilization (+/- 5%)				8,211				
			9	Unlisted Items (+/- 10%)				17,580				
				Subtotal				190,000				
				Contingencies (+/- 20%)				40,000				
				Field Cost - Structures and Improvements				230,000				
		150		Reservoirs					1,600,000			
				Liners for Concentration Cells								
				Furnish and Install Geomembrane Liner - 88,000 SY								
			1	F&I 40 mil thick LDPE liner - 88,000 SY	88,000	sy	6.50	572,000				
			2	Excavation - Top 20" and stockpile	48,700	cy	3.00	146,100				
			3	Prep surface for LDPE liner	88,000	sy	0.15	13,200				
			4	Place from stockpile and compact (10% Loss)	43,800	cy	10.00	438,000				
			5	Mobilization (+/- 5%)				58,465				

CONSTRUCTION COST ESTIMATE

PROJECT: Central Valley Project	PREPARED BY: Regional Office, Sacramento, CA
DIVISION: West San Joaquin Division	ESTIMATE DATE: July 2007 (Revised after DEC)
UNIT: San Luis Unit -- Drainage System -- Westlands Water District-North	ESTIMATE TYPE: Feasibility
FEATURE: Drainage Feature Re-Evaluation Feasibility Study	PRICE LEVEL: April 2006

PROPERTY CLASS	IDENTIFIED PROPERTY	PLANT ACCOUNT	ITEM	DESCRIPTION	QUANTITY	UNIT	PRICE	AMOUNT	FIELD COST	TOTAL FIELD COST	NONCONTRACT COST	CONSTRUCTION COST
12	04			WWD NORTH - EVAPORATION PONDS (continued)								
				(3) FUTURE ADDITIONAL TERMINAL CELL - 25 YEARS (continued)								
		150		Reservoirs (continued)								
			6	Unlisted Items (+/- 10%)				122,235				
				Subtotal				1,350,000				
				Contingencies (+/- 20%)				250,000				
				Field Cost - Reservoirs				1,600,000				
		152		Waterways					3,700,000			
				Sheetpile Embankment Dikes for one additional terminal cell:								
			1	Perimeter walls, 2,350'x20' long, furnish and drive 10 ft	47,000	sf	16.00	752,000				
			2	Compacted embankment, furnish and place	88,000	cy	15.00	1,320,000				
			3	Scarify footprint (12" disc)	15,600	sy	1.00	15,600				
			4	Excavate compacted embankment	43,350	cy	10.00	433,500				
			5	Waste on site	43,350	cy	3.00	130,050				
			6	Mobilization (+/- 5%)				132,558				
			7	Unlisted Items (+/- 10%)				216,293				
				Subtotal				3,000,000				
				Contingencies (+/- 20%)				700,000				
				Field Cost - Waterways				3,700,000				
				FACILITATING SERVICES (2%)								
				INVESTIGATIONS (3%)								
				DESIGNS & SPECIFICATIONS (10%)								
				CONSTRUCTION SUPERVISION (12%)								
				OTHER COSTS (+/- 27%)							1,470,000	

CONSTRUCTION COST ESTIMATE

PROJECT: Central Valley Project	PREPARED BY: Regional Office, Sacramento, CA
DIVISION: West San Joaquin Division	ESTIMATE DATE: July 2007 (Revised after DEC)
UNIT: San Luis Unit -- Drainage System -- Westlands Water District-North	ESTIMATE TYPE: Feasibility
FEATURE: Drainage Feature Re-Evaluation Feasibility Study	PRICE LEVEL: April 2006

PROPERTY CLASS	IDENTIFIED PROPERTY	PLANT ACCOUNT	ITEM	DESCRIPTION	QUANTITY	UNIT	PRICE	AMOUNT	FIELD COST	TOTAL FIELD COST	NONCONTRACT COST	CONSTRUCTION COST
12	04			WWD NORTH - EVAPORATION PONDS (continued)								
				(4) FUTURE ADDITIONAL TERMINAL CELL - 37.5 YEARS LATER						5,530,000	1,470,000	7,000,000
		100		Land and Rights								
				Costs of Land and Rights have been included with Initial Construction.								
		130		Structures and Improvements					230,000			
				Perimeter Drains:								
			1	Excavation for interceptor trench - 2'x7'x2,350'	1,220	cy	4.50	5,490				
			2	F&I Sand filter material (30 mile haul)	870	cy	60.00	52,200				
			3	F&I Gravel drain material (30 mile haul) - 4 sf /ft for 8" drain pipe	348	cy	70.00	24,360				
			4	F&I 8" dia PVC slotted drain pipe	2,350	lf	20.00	47,000				
			5	Excavation for waste trench	1,220	cy	3.00	3,660				
			6	Inspection/Cleanout Manhole - D=5'xH=8' - FRP preformed	3	ea	10,000.00	30,000				
			7	Return Flow Pump - D=4"; TDH=20'; w/ auto on/off	3	ea	500.00	1,500				
			8	Mobilization (+/- 5%)				8,211				
			9	Unlisted Items (+/- 10%)				17,580				
				Subtotal				190,000				
				Contingencies (+/- 20%)				40,000				
				Field Cost - Structures and Improvements				230,000				
		150		Reservoirs					1,600,000			
				Liners for Concentration Cells								
				Furnish and Install Geomembrane Liner - 88,000 SY								
			1	F&I 40 mil thick LDPE liner - 88,000 SY	88,000	sy	6.50	572,000				
			2	Excavation - Top 20" and stockpile	48,700	cy	3.00	146,100				
			3	Prep surface for LDPE liner	88,000	sy	0.15	13,200				
			4	Place from stockpile and compact (10% Loss)	43,800	cy	10.00	438,000				
			5	Mobilization (+/- 5%)				58,465				

CONSTRUCTION COST ESTIMATE

PROJECT: Central Valley Project	PREPARED BY: Regional Office, Sacramento, CA
DIVISION: West San Joaquin Division	ESTIMATE DATE: July 2007 (Revised after DEC)
UNIT: San Luis Unit -- Drainage System -- Westlands Water District-North	ESTIMATE TYPE: Feasibility
FEATURE: Drainage Feature Re-Evaluation Feasibility Study	PRICE LEVEL: April 2006

PROPERTY CLASS	IDENTIFIED PROPERTY	PLANT ACCOUNT	ITEM	DESCRIPTION	QUANTITY	UNIT	PRICE	AMOUNT	FIELD COST	TOTAL FIELD COST	NONCONTRACT COST	CONSTRUCTION COST
12	04			WWD NORTH - EVAPORATION PONDS (continued)								
				(4) FUTURE ADDITIONAL TERMINAL CELL - 37.5 YEARS (continued)								
		150		Reservoirs (continued)								
			6	Unlisted Items (+/- 10%)				122,235				
				Subtotal				1,350,000				
				Contingencies (+/- 20%)				250,000				
				Field Cost - Reservoirs				1,600,000				
		152		Waterways					3,700,000			
				Sheetpile Embankment Dikes for one additional terminal cell:								
			1	Perimeter walls, 2,350'x20' long, furnish and drive 10 ft	47,000	sf	16.00	752,000				
			2	Compacted embankment, furnish and place	88,000	cy	15.00	1,320,000				
			3	Scarify footprint (12" disc)	15,600	sy	1.00	15,600				
			4	Excavate compacted embankment	43,350	cy	10.00	433,500				
			5	Waste on site	43,350	cy	3.00	130,050				
			6	Mobilization (+/- 5%)				132,558				
			7	Unlisted Items (+/- 10%)				216,293				
				Subtotal				3,000,000				
				Contingencies (+/- 20%)				700,000				
				Field Cost - Waterways				3,700,000				
				FACILITATING SERVICES (2%)								
				INVESTIGATIONS (3%)								
				DESIGNS & SPECIFICATIONS (10%)								
				CONSTRUCTION SUPERVISION (12%)								
				OTHER COSTS (+/- 27%)							1,470,000	

CONSTRUCTION COST ESTIMATE

PROJECT: Central Valley Project	PREPARED BY: Regional Office, Sacramento, CA
DIVISION: West San Joaquin Division	ESTIMATE DATE: July 2007 (Revised after DEC)
UNIT: San Luis Unit -- Drainage System -- Westlands Water District-North	ESTIMATE TYPE: Feasibility
FEATURE: Drainage Feature Re-Evaluation Feasibility Study	PRICE LEVEL: April 2006

PROPERTY CLASS	IDENTIFIED PROPERTY	PLANT ACCOUNT	ITEM	DESCRIPTION	QUANTITY	UNIT	PRICE	AMOUNT	FIELD COST	TOTAL FIELD COST	NONCONTRACT COST	CONSTRUCTION COST
12	05			MITIGATION - Three types of habitat take up 0.814 80-acre sites.						4,210,000	1,090,000	5,300,000
				These include alternative habitat-shallow water, compensation habitat-								
				shallow water, and compensation habitat-deep water. Materials used								
				include pumps, weirs, and HDPE pipe.								
				80-Acre Unit Mitigation Features - For the breakdown of costs for					3,900,000			
				these units, see the itemized cost list in the Appendix to this estimate.								
				(1) Alternative Habitat -- Shallow Water -- Field Cost	0.538	ea	2,900,000.00	1,559,475				
				(2) Compensation Habitat -- Shallow Water -- Field Cost	0.039	ea	2,333,000.00	90,404				
				(3) Compensation Habitat -- Deep Water -- Field Cost	0.237	ea	5,200,000.00	1,230,450				
				(4) Appurtenant Facilities -- Field Cost	0.813	ea	1,210,000.00	983,881				
				Rounding				35,790				
				Field Cost - 80-Acre Unit Mitigation Features				3,900,000				
		100		Land and Rights					310,000			
			1	Fees - Alternative Habitat-Shallow Water	43.02	Ac	4,000.00	172,080				
			2	Fees - Compensation Habitat-Shallow Water	3.10	Ac	4,000.00	12,400				
			3	Fees - Compensation Habitat-Deep Water	18.93	Ac	4,000.00	75,720				
			4	Unlisted Items (+/- 5%)				9,800				
				Subtotal				270,000				
				Contingencies (+/- 15%)				40,000				
				Field Cost - Land and Rights				310,000				
				FACILITATING SERVICES (2%)								
				INVESTIGATIONS (3%)								
				DESIGNS & SPECIFICATIONS (10%)								
				CONSTRUCTION SUPERVISION (12%)								
				OTHER COSTS (+/- 27%)							1,090,000	

CONSTRUCTION COST ESTIMATE

PROJECT: Central Valley Project	PREPARED BY: Regional Office, Sacramento, CA
DIVISION: West San Joaquin Division	ESTIMATE DATE: July 2007 (Revised after DEC)
UNIT: San Luis Unit -- Drainage System -- Westlands Water District-North	ESTIMATE TYPE: Feasibility
FEATURE: Drainage Feature Re-Evaluation Feasibility Study	PRICE LEVEL: April 2006

PROPERTY CLASS	IDENTIFIED PROPERTY	PLANT ACCOUNT	ITEM	DESCRIPTION	QUANTITY	UNIT	PRICE	AMOUNT	FIELD COST	TOTAL FIELD COST	NONCONTRACT COST	CONSTRUCTION COST
13				TRANSMISSION LINES						338,000	96,000	434,000
	01			REUSE AREA M TRANSMISSION LINE - A 12kV power service drop						29,000	8,000	37,000
				from the existing transmission line on a country road south of								
				W California Avenue to the vicinity of Pumping Plant M.								
		182		Poles & Overhead Conductors					29,000			
			1	Service Poles, Transformer, Disconnect, & Meter	1	ea	20,000.00	20,000				
			2	Mobilization (+/- 5%)				1,000				
			3	Unlisted Items (+/- 15%)				3,000				
				Subtotal				24,000				
				Contingencies (+/- 20%)				5,000				
				Field Cost - Poles & Overhead Conductors				29,000				
				FACILITATING SERVICES (2%)								
				INVESTIGATIONS (3%)								
				DESIGNS & SPECIFICATIONS (10%)								
				CONSTRUCTION SUPERVISION (12%)								
				OTHER COSTS (+/- 27%)							8,000	

CONSTRUCTION COST ESTIMATE

PROJECT: Central Valley Project	PREPARED BY: Regional Office, Sacramento, CA
DIVISION: West San Joaquin Division	ESTIMATE DATE: July 2007 (Revised after DEC)
UNIT: San Luis Unit -- Drainage System -- Westlands Water District-North	ESTIMATE TYPE: Feasibility
FEATURE: Drainage Feature Re-Evaluation Feasibility Study	PRICE LEVEL: April 2006

PROPERTY CLASS	IDENTIFIED PROPERTY	PLANT ACCOUNT	ITEM	DESCRIPTION	QUANTITY	UNIT	PRICE	AMOUNT	FIELD COST	TOTAL FIELD COST	NONCONTRACT COST	CONSTRUCTION COST
13	02			REUSE AREA N TRANSMISSION LINE - A 12kV power service drop						29,000	8,000	37,000
				from the existing transmission line on N Douglas Avenue to the vicinity								
				of Pumping Plant N.								
		182		Poles & Overhead Conductors					29,000			
			1	Service Poles, Transformer, Disconnect, & Meter	1	ea	20,000.00	20,000				
			2	Mobilization (+/- 5%)				1,000				
			3	Unlisted Items (+/- 15%)				3,000				
				Subtotal				24,000				
				Contingencies (+/- 20%)				5,000				
				Field Cost - Poles & Overhead Conductors				29,000				
				FACILITATING SERVICES (2%)								
				INVESTIGATIONS (3%)								
				DESIGNS & SPECIFICATIONS (10%)								
				CONSTRUCTION SUPERVISION (12%)								
				OTHER COSTS (+/- 27%)							8,000	

CONSTRUCTION COST ESTIMATE

PROJECT: Central Valley Project	PREPARED BY: Regional Office, Sacramento, CA
DIVISION: West San Joaquin Division	ESTIMATE DATE: July 2007 (Revised after DEC)
UNIT: San Luis Unit -- Drainage System -- Westlands Water District-North	ESTIMATE TYPE: Feasibility
FEATURE: Drainage Feature Re-Evaluation Feasibility Study	PRICE LEVEL: April 2006

PROPERTY CLASS	IDENTIFIED PROPERTY	PLANT ACCOUNT	ITEM	DESCRIPTION	QUANTITY	UNIT	PRICE	AMOUNT	FIELD COST	TOTAL FIELD COST	NONCONTRACT COST	CONSTRUCTION COST
13	03			REUSE AREA O TRANSMISSION LINE - A 12kV, wood pole						140,000	40,000	180,000
				transmission line, extending 1/2 mile from the existing power line on								
				W Belmont Avenue to the vicinity of Pumping Plant O.								
		182		Poles & Overhead Conductors					140,000			
			1	Wood Pole Transmission Line	0.5	mi	150,000.00	75,000				
			2	Service Poles, Transformer, Disconnect, & Meter	1	ea	20,000.00	20,000				
			3	Mobilization (+/- 5%)				4,750				
			4	Unlisted Items (+/- 15%)				15,250				
				Subtotal				115,000				
				Contingencies (+/- 20%)				25,000				
				Field Cost - Poles & Overhead Conductors				140,000				
				FACILITATING SERVICES (2%)								
				INVESTIGATIONS (3%)								
				DESIGNS & SPECIFICATIONS (10%)								
				CONSTRUCTION SUPERVISION (12%)								
				OTHER COSTS (+/- 27%)							40,000	

CONSTRUCTION COST ESTIMATE

PROJECT: Central Valley Project	PREPARED BY: Regional Office, Sacramento, CA
DIVISION: West San Joaquin Division	ESTIMATE DATE: July 2007 (Revised after DEC)
UNIT: San Luis Unit -- Drainage System -- Westlands Water District-North	ESTIMATE TYPE: Feasibility
FEATURE: Drainage Feature Re-Evaluation Feasibility Study	PRICE LEVEL: April 2006

PROPERTY CLASS	IDENTIFIED PROPERTY	PLANT ACCOUNT	ITEM	DESCRIPTION	QUANTITY	UNIT	PRICE	AMOUNT	FIELD COST	TOTAL FIELD COST	NONCONTRACT COST	CONSTRUCTION COST
13	04			WWD NORTH TREATMENT PLANT TRANSMISSION LINE - A 12kV,						140,000	40,000	180,000
				wood pole transmission line extending 1/2 mile from the existing line								
				on S Ohio Avenue to the vicinity of the WWD North Treatment Plants.								
		182		Poles & Overhead Conductors					140,000			
			1	Wood Pole Transmission Line	0.5	mi	150,000.00	75,000				
			2	Service Poles, Transformer, Disconnect, & Meter	1	ea	20,000.00	20,000				
			3	Mobilization (+/- 5%)				4,750				
			4	Unlisted Items (+/- 15%)				15,250				
				Subtotal				115,000				
				Contingencies (+/- 20%)				25,000				
				Field Cost - Poles & Overhead Conductors				140,000				
				FACILITATING SERVICES (2%)								
				INVESTIGATIONS (3%)								
				DESIGNS & SPECIFICATIONS (10%)								
				CONSTRUCTION SUPERVISION (12%)								
				OTHER COSTS (+/- 27%)							40,000	

CONSTRUCTION COST ESTIMATE

PROJECT: Central Valley Project	PREPARED BY: Regional Office, Sacramento, CA
DIVISION: West San Joaquin Division	ESTIMATE DATE: July 2007 (Revised after DEC)
UNIT: San Luis Unit -- Drainage System -- Westlands Water District-North	ESTIMATE TYPE: Feasibility
FEATURE: Drainage Feature Re-Evaluation Feasibility Study	PRICE LEVEL: April 2006

PROPERTY CLASS	IDENTIFIED PROPERTY	PLANT ACCOUNT	ITEM	DESCRIPTION	QUANTITY	UNIT	PRICE	AMOUNT	FIELD COST	TOTAL FIELD COST	NONCONTRACT COST	CONSTRUCTION COST
15				GENERAL PROPERTY						3,370,000	930,000	4,300,000
	01			SCADA ELECTRICAL & CONTROL EQUIPMENT - This communication						3,370,000	930,000	4,300,000
				system consists of a collection of antennas which allow the flow of								
				water to the Reuse Areas to be controlled at the RO Treatment Plant.								
		100		Land and Rights								
				Costs of Land and Rights have been included with RO Treatment Plant.								
		180		Installed Supervisory Control Equipment					3,370,000			
				(1) Re-Use Pump Control Located at RO Treatment Plant					210,000			
				Fiber Optic Cable and Equipment								
			1	F&I fiber optic cable, 12-fiber single mode in 2" HDPE conduit	6,000	ft	12.00	72,000				
			2	F&I splice closure, Preformed Line Products Coyote Runt closure	2	ea	450.00	900				
			3	F&I termination/splice panels, Termination for 24 fibers at each panel	4	ea	500.00	2,000				
			4	Testing	1	ls	4,000.00	4,000				
				Communications Equipment								
			5	F&I NEMA 4 eqpmnt enclosure floor mount; panel, thermostat & fan	1	ea	5,070.00	5,070				
			6	F&I 40' antenna tower	1	ea	4,010.00	4,010				
			7	F&I Antenna tower accessories; Base plate, guying, grounding	1	ea	500.00	500				
			8	F&I Antenna; Spread Spectrum 2.3 - 2.5 GHz Parabolic	2	ea	800.00	1,600				
				F&I Coaxial cable, connectors and transient								
			9	Cable	140	ft	2.00	280				
			10	Connectors	4	ea	20.00	80				
			11	F&I WaveRider IP Router/Bridge	2	ea	2,500.00	5,000				
			12	F&I Network Switch with media converter; N-TRON 508FX2	3	ea	1,570.00	4,710				
				Control Equipment								
			13	F&I Rack mntd Re-use Area prioritization server w/ operating system	1	ea	2,500.00	2,500				
			14	F&I HMI monitor	2	ea	300.00	600				
			15	F&I prioritization software for Re-use Area	1	ea	32,800.00	32,800				

CONSTRUCTION COST ESTIMATE

PROJECT: Central Valley Project	PREPARED BY: Regional Office, Sacramento, CA
DIVISION: West San Joaquin Division	ESTIMATE DATE: July 2007 (Revised after DEC)
UNIT: San Luis Unit -- Drainage System -- Westlands Water District-North	ESTIMATE TYPE: Feasibility
FEATURE: Drainage Feature Re-Evaluation Feasibility Study	PRICE LEVEL: April 2006

PROPERTY CLASS	IDENTIFIED PROPERTY	PLANT ACCOUNT	ITEM	DESCRIPTION	QUANTITY	UNIT	PRICE	AMOUNT	FIELD COST	TOTAL FIELD COST	NONCONTRACT COST	CONSTRUCTION COST
15	01			SCADA ELECTRICAL & CONTROL EQUIPMENT (continued)								
		180		Installed Supervisory Control Equipment (continued)								
				(1) Re-Use Pump Control (continued)								
			16	Mobilization (+/- 5%)				6,803				
			17	Unlisted Items (+/- 15%)				21,428				
			18	Allowance for Procurement Strategies (+/- 5%)				5,720				
				Subtotal				170,000				
				Contingencies (+/- 20%)				40,000				
				Field Cost - (1) Re-Use Pump Control Located at RO Ttmnt Plnt				210,000				
				(2) Re-Use Pump Control Located at Pumping Plants					260,000			
				Communications Equipment								
			1	F&I NEMA 4 eqpmnt enclosure floor mount; panel, thermostat & fan	2	ea	5,070.00	10,140				
			2	F&I 40' antenna tower	2	ea	4,010.00	8,020				
			3	F&I Antenna tower accessories; Base plate, guying, grounding	2	ea	500.00	1,000				
			4	F&I Antenna; Spread Spectrum 2.3 - 2.5 GHz Parabolic	2	ea	1,100.00	2,200				
			5	F&I Antenna; Spread Spectrum 2.3 - 2.5 GHz Omni	2	ea	150.00	300				
				F&I Coaxial cable and connectors								
			6	Cable	280	ft	2.00	560				
			7	Connectors	8	ea	20.00	160				
			8	F&I WaveRider IP Router/Bridge	2	ea	2,500.00	5,000				
			9	F&I Network Switch with media converter; N-TRON 304TX	2	ea	320.00	640				
			10	F&I 2.4 GHz spread spectrum radios	2	ea	1,200.00	2,400				
				Control Equipment								
				F&I Plant PLC								
			11	Controller (Allen-Bradley compact Logix)	3	ea	3,800.00	11,400				
			12	F&I AC Digital input modules (Allen - Bradley 1769-IA81)	6	ea	200.00	1,200				
			13	F&I AC Digital output modules (Allen - Bradley 1769-OA8)	3	ea	350.00	1,050				
			14	F&I Analog Input Module (Allen - Bradley 1769-IF4I)	3	ea	550.00	1,650				
			15	F&I DC Digital input module (Allen - Bradley 1769-IQ16)	3	ea	280.00	840				
			16	F&I Power supply (Allen - Bradley 1769-PA4)	3	ea	300.00	900				
			17	F&I Operators panel	3	ea	2,800.00	8,400				

CONSTRUCTION COST ESTIMATE

PROJECT: Central Valley Project	PREPARED BY: Regional Office, Sacramento, CA
DIVISION: West San Joaquin Division	ESTIMATE DATE: July 2007 (Revised after DEC)
UNIT: San Luis Unit -- Drainage System -- Westlands Water District-North	ESTIMATE TYPE: Feasibility
FEATURE: Drainage Feature Re-Evaluation Feasibility Study	PRICE LEVEL: April 2006

PROPERTY CLASS	IDENTIFIED PROPERTY	PLANT ACCOUNT	ITEM	DESCRIPTION	QUANTITY	UNIT	PRICE	AMOUNT	FIELD COST	TOTAL FIELD COST	NONCONTRACT COST	CONSTRUCTION COST
15	01			SCADA ELECTRICAL & CONTROL EQUIPMENT (continued)								
		180		Installed Supervisory Control Equipment (continued)								
				(2) Re-Use Pump Control Located at Pumping Plants (continued)								
			18	F, T&I: Pumping Plant application, prioritization, & develpmnt software	3	ea	32,800.00	98,400				
				Power Devices								
			19	F&I UPS 500 VA APC	3	ea	1,580.00	4,740				
			20	F&I 24-VDC transducer pwr supply, Acopian Goldbox Linear regulated	3	ea	550.00	1,650				
			21	F&I 12 VDC security sys pwr supply, Acopian Goldbox Linear regulated	3	ea	550.00	1,650				
				Transient protection devices								
			22	F&I 120 VAC transient protection device; MCG Electronics Model 420	3	ea	305.00	915				
			23	F&I Din-rail mounted transient protection, receptacle Leviton	3	ea	75.00	225				
			24	F&I 4-to-20 mA transient protection modules, PROTEK	3	ea	120.00	360				
			25	F&I Coax cable transient protection modules	3	ea	150.00	450				
				Depth monitoring equipment								
			26	F&I NEMA 4 depth monitoring equipment enclosures with back panel	3	ea	500.00	1,500				
			27	F&I depth transducer (Druck PTX 1240)	3	ea	1,500.00	4,500				
			28	F&I 4-to-20 mA transient protection module	3	ea	75.00	225				
			29	Mobilization (+/- 5%)				8,524				
			30	Unlisted Items (+/- 15%)				26,850				
			31	Allowance for Procurement Strategies (+/- 5%)				14,151				
				Subtotal				220,000				
				Contingencies (+/- 20%)				40,000				
				Field Cost - (2) Re-Use Pump Control Located Pumping Plants				260,000				
				(3) Farm Pump Control					2,900,000			
				Communications Equipment								
			1	F&I NEMA 12 eqpmnt enclosure wall mount; panel, thermostat & fan	117	ea	4,000.00	468,000				
			2	F&I 15' pole antenna tower	117	ea	1,200.00	140,400				
			3	F&I Antenna tower grounding	117	ea	150.00	17,550				
			4	F&I yagi antenna	117	ea	500.00	58,500				
				F&I Coaxial cable and connectors								
			5	Cable	2,340	ft	2.00	4,680				

CONSTRUCTION COST ESTIMATE

PROJECT: Central Valley Project	PREPARED BY: Regional Office, Sacramento, CA
DIVISION: West San Joaquin Division	ESTIMATE DATE: July 2007 (Revised after DEC)
UNIT: San Luis Unit -- Drainage System -- Westlands Water District-North	ESTIMATE TYPE: Feasibility
FEATURE: Drainage Feature Re-Evaluation Feasibility Study	PRICE LEVEL: April 2006

PROPERTY CLASS	IDENTIFIED PROPERTY	PLANT ACCOUNT	ITEM	DESCRIPTION	QUANTITY	UNIT	PRICE	AMOUNT	FIELD COST	TOTAL FIELD COST	NONCONTRACT COST	CONSTRUCTION COST
15	01			SCADA ELECTRICAL & CONTROL EQUIPMENT (continued)								
		180		Installed Supervisory Control Equipment (continued)								
				(3) Farm Pump Control (continued)								
			6	Connectors	234	ea	20.00	4,680				
			7	F&I 2.4 GHz Spread Spectrum radios	117	ea	1,200.00	140,400				
				Control Equipment								
				F&I Plant RTU								
			8	Controller (Geomation 3300)	117	ea	1,000.00	117,000				
			9	F&I 2-AC Digital input modules (Geomation 1204 STAT)	234	ea	500.00	117,000				
			10	F&I AC Digital output modules (Geomation 1221 RO)	117	ea	550.00	64,350				
			11	F&I Analog Input Module (Geomation 1201 mA)	117	ea	525.00	61,425				
			12	F&I Power supply (Geomation 1110 PS24)	117	ea	200.00	23,400				
			13	F, T&I Software: Farm Well site software development software	117	ea	500.00	58,500				
				Transient protection devices								
			14	F&I 120 VAC transient protection device, MCG Electronics Model 420	117	ea	305.00	35,685				
			15	F&I 4-to-20 mA transient protection modules, PROTEK	117	ea	120.00	14,040				
				Depth monitoring equipment								
			16	F&I NEMA 4 depth monitoring equipment enclosures with back panel	117	ea	500.00	58,500				
			17	F&I depth transducer (Druck PTX 1240)	117	ea	1,500.00	175,500				
			18	F&I 4-to-20 mA transient protection module	117	ea	120.00	14,040				
				Electrical Equipment								
			19	Furnish and install into each communications equipment enclosure:	117	ea	2,800.00	327,600				
				1 hp motor starter								
				600 V, 3 position selector switch								
				Two 600 V oil tight momentary pushbuttons								
				600 V industrial control relay								
				Fuse and fuse block								
				Two 600 volt terminal blocks with 12 circuits								
				Two 600 volt push to test lamps								
				24 VDC Power Supply - Acopian Gold Box								

CONSTRUCTION COST ESTIMATE

PROJECT: Central Valley Project	PREPARED BY: Regional Office, Sacramento, CA
DIVISION: West San Joaquin Division	ESTIMATE DATE: July 2007 (Revised after DEC)
UNIT: San Luis Unit -- Drainage System -- Westlands Water District-North	ESTIMATE TYPE: Feasibility
FEATURE: Drainage Feature Re-Evaluation Feasibility Study	PRICE LEVEL: April 2006

PROPERTY CLASS	IDENTIFIED PROPERTY	PLANT ACCOUNT	ITEM	DESCRIPTION	QUANTITY	UNIT	PRICE	AMOUNT	FIELD COST	TOTAL FIELD COST	NONCONTRACT COST	CONSTRUCTION COST
15	01			SCADA ELECTRICAL & CONTROL EQUIPMENT (continued)								
		180		Installed Supervisory Control Equipment (continued)								
				(3) Farm Pump Control (continued)								
			20	Mobilization (+/- 5%)				95,063				
			21	Unlisted Items (+/- 15%)				299,447				
			22	Allowance for Procurement Strategies (+/- 5%)				104,241				
				Subtotal				2,400,000				
				Contingencies (+/- 20%)				500,000				
				Field Cost - (3) Farm Pump Control				2,900,000				
				Field Cost - Installed Supervisory Control Equipment				3,370,000				
				FACILITATING SERVICES (2%)								
				INVESTIGATIONS (3%)								
				DESIGNS & SPECIFICATIONS (10%)								
				CONSTRUCTION SUPERVISION (12%)								
				OTHER COSTS (+/- 27%)							930,000	

CONSTRUCTION COST ESTIMATE

PROJECT: Central Valley Project	PREPARED BY: Regional Office, Sacramento, CA
DIVISION: West San Joaquin Division	ESTIMATE DATE: July 2007 (Revised after DEC)
UNIT: San Luis Unit -- Drainage System -- Westlands Water District-North	ESTIMATE TYPE: Feasibility
FEATURE: Drainage Feature Re-Evaluation Feasibility Study	PRICE LEVEL: April 2006

PROPERTY CLASS	IDENTIFIED PROPERTY	PLANT ACCOUNT	ITEM	DESCRIPTION	QUANTITY	UNIT	PRICE	AMOUNT	FIELD COST	TOTAL FIELD COST	NONCONTRACT COST	CONSTRUCTION COST
				APPENDIX -- Unit Price for various styles of Mitigation Ponds.								
				One Pond unit is 80 Ac in size.								
12	05			MITIGATION - The following estimates represent the cost of one								
				80-acre site. In the Construction Cost Estimate, the Mitigation for								
				each area will be priced by the number of the various 80-acre								
				sites used.								
				(1) ALTERNATIVE HABITAT - SHALLOW WATER (For 1 - 80 acre pond)						2,900,000		
		130		Structures and Improvements					2,900,000			
			1	Excavation for moat	22,938	cy	4.50	103,221				
			2	Placement & compaction of embankment for road and ramps	17,200	cy	10.00	172,000				
			3	Gravel road surfacing, 6" deep	3,150	cy	65.00	204,750				
			4	Move earth within wetland interior	306,750	cy	5.00	1,533,750				
			5	Fencing, 6' high chain link fence	20	lf	30.00	600				
			6	Gates, 6' high x 20' wide double swing, chain link	2	ea	1,550.00	3,100				
			7	18" dia. HDPE pipe (assume DR32.5)	120	lf	50.00	6,000				
			8	Mobilization (+/- 5%)				101,171				
			9	Unlisted Items (+/- 15%)				275,408				
				Subtotal				2,400,000				
				Contingencies (+/- 20%)				500,000				
				Field Cost - Structures and Improvements				2,900,000				

CONSTRUCTION COST ESTIMATE

PROJECT: Central Valley Project	PREPARED BY: Regional Office, Sacramento, CA
DIVISION: West San Joaquin Division	ESTIMATE DATE: July 2007 (Revised after DEC)
UNIT: San Luis Unit -- Drainage System -- Westlands Water District-North	ESTIMATE TYPE: Feasibility
FEATURE: Drainage Feature Re-Evaluation Feasibility Study	PRICE LEVEL: April 2006

PROPERTY CLASS	IDENTIFIED PROPERTY	PLANT ACCOUNT	ITEM	DESCRIPTION	QUANTITY	UNIT	PRICE	AMOUNT	FIELD COST	TOTAL FIELD COST	NONCONTRACT COST	CONSTRUCTION COST
12	05			MITIGATION (continued)								
				(2) COMPENSATION HABITAT - SHALLOW HABITAT (For 1 - 80 acre pond)						2,333,000		
		130		Structures and Improvements					2,300,000			
			1	Excavation for moat	23,000	cy	4.50	103,500				
			2	Placement & compaction of embankment for road and ramps	22,000	cy	10.00	220,000				
			3	Gravel road surfacing, 6" deep	3,700	cy	65.00	240,500				
			4	Move earth within wetland interior	204,500	cy	5.00	1,022,500				
			5	Fencing, 6' high chain link fence	20	lf	30.00	600				
			6	Gates, 6' high x 20' wide double swing, chain link	2	ea	1,550.00	3,100				
			7	Mobilization (+/- 5%)				79,510				
			8	Unlisted Items (+/- 15%)				230,290				
				Subtotal				1,900,000				
				Contingencies (+/- 20%)				400,000				
				Field Cost - Structures and Improvements				2,300,000				
		152		Waterways					33,000			
			1	6" dia. Plastic siphon tubes, 10' long (assume HDPE DR32.5)	24	ea	110.00	2,640				
			2	18" dia. HDPE pipe (assume DR32.5)	120	lf	50.00	6,000				
			3	12" gate valves	4	ea	3,500.00	14,000				
			4	Mobilization (+/- 5%)				1,132				
			5	Unlisted Items (+/- 15%)				3,228				
				Subtotal				27,000				
				Contingencies (+/- 20%)				6,000				
				Field Cost - Waterways				33,000				

CONSTRUCTION COST ESTIMATE

PROJECT: Central Valley Project	PREPARED BY: Regional Office, Sacramento, CA
DIVISION: West San Joaquin Division	ESTIMATE DATE: July 2007 (Revised after DEC)
UNIT: San Luis Unit -- Drainage System -- Westlands Water District-North	ESTIMATE TYPE: Feasibility
FEATURE: Drainage Feature Re-Evaluation Feasibility Study	PRICE LEVEL: April 2006

PROPERTY CLASS	IDENTIFIED PROPERTY	PLANT ACCOUNT	ITEM	DESCRIPTION	QUANTITY	UNIT	PRICE	AMOUNT	FIELD COST	TOTAL FIELD COST	NONCONTRACT COST	CONSTRUCTION COST
12	05			MITIGATION (continued)								
				(3) COMPENSATION HABITAT - DEEP WATER (For 1 - 80 acre pond)						5,200,000		
		130		Structures and Improvements					5,200,000			
			1	Excavation for moat	23,000	cy	4.50	103,500				
			2	Placement & compaction of embankment for road and ramps	15,500	cy	10.00	155,000				
			3	Gravel road surfacing, 6" deep	3,775	cy	65.00	245,375				
			4	Move earth within wetland interior	615,000	cy	5.00	3,075,000				
			5	Fencing, 6' high chain link fence	20	lf	30.00	600				
			6	Gates, 20' wide double swing, chain link	2	ea	1,550.00	3,100				
			7	Mobilization (+/- 5%)				179,129				
			8	Unlisted Items (+/- 15%)				538,296				
				Subtotal				4,300,000				
				Contingencies (+/- 20%)				900,000				
				Field Cost - Structures and Improvements				5,200,000				

CONSTRUCTION COST ESTIMATE

PROJECT: Central Valley Project	PREPARED BY: Regional Office, Sacramento, CA
DIVISION: West San Joaquin Division	ESTIMATE DATE: July 2007 (Revised after DEC)
UNIT: San Luis Unit -- Drainage System -- Westlands Water District-North	ESTIMATE TYPE: Feasibility
FEATURE: Drainage Feature Re-Evaluation Feasibility Study	PRICE LEVEL: April 2006

PROPERTY CLASS	IDENTIFIED PROPERTY	PLANT ACCOUNT	ITEM	DESCRIPTION	QUANTITY	UNIT	PRICE	AMOUNT	FIELD COST	TOTAL FIELD COST	NONCONTRACT COST	CONSTRUCTION COST
12	05			MITIGATION (continued)								
				(4) APPURTENANT FACILITIES (For 1 - 80 acre pond)						1,210,000		
		130		Structures and Improvements					350,000			
				Based on 2:1 Side Slopes:								
			1	Excavation	17,692	cy	4.50	79,614				
			2	Backfill	16,923	cy	3.00	50,769				
			3	Compacting Backfill	1,731	cy	8.50	14,714				
				Trench Box Earthwork (based on vertical side slopes):								
			4	Excavation	9.6	cy	15.00	144				
			5	Backfill	8.5	cy	7.00	60				
			6	Compacting Backfill	1.2	cy	25.00	30				
				Outlet Items:								
			7	Concrete	13	cy	1,000.00	13,000				
			8	Cementitious Material	3.8	tons	170.00	646				
			9	Reinforcement Steel	1,615	lbs	1.75	2,826				
			10	Unwatering	1	ls	42,308.00	42,308				
			11	Miscellaneous Metalwork - Steel	3,846	lbs	7.00	26,922				
			12	Concrete	5.8	cy	1,000.00	5,800				
			13	Cement	1.54	tons	175.00	270				
			14	Reinforcement	769	lbs	1.75	1,346				
			15	Excavation, common	42	cy	15.00	630				
			16	Backfill	31	cy	10.00	310				
			17	Compacting backfill	31	cy	10.00	310				
			18	Gravel surfacing	3.8	cy	65.00	247				
			19	Mobilization (+/- 5%)				11,997				
			20	Unlisted Items (+/- 15%)				38,058				
				Subtotal				290,000				
				Contingencies (+/- 20%)				60,000				
				Field Cost - Structures and Improvements				350,000				

CONSTRUCTION COST ESTIMATE

PROJECT: Central Valley Project	PREPARED BY: Regional Office, Sacramento, CA
DIVISION: West San Joaquin Division	ESTIMATE DATE: July 2007 (Revised after DEC)
UNIT: San Luis Unit -- Drainage System -- Westlands Water District-North	ESTIMATE TYPE: Feasibility
FEATURE: Drainage Feature Re-Evaluation Feasibility Study	PRICE LEVEL: April 2006

PROPERTY CLASS	IDENTIFIED PROPERTY	PLANT ACCOUNT	ITEM	DESCRIPTION	QUANTITY	UNIT	PRICE	AMOUNT	FIELD COST	TOTAL FIELD COST	NONCONTRACT COST	CONSTRUCTION COST
12	05			MITIGATION (continued)								
				(4) APPURTENANT FACILITIES (continued)								
		152		Waterways					630,000			
			1	12 inch diameter DR32.5	1,280	lf	29.00	37,120				
			2	24 inch diameter DR32.6	4,570	lf	75.00	342,750				
			3	Inlet Stand Pipe (assumes 100' of 6" dia sch 40 stl pipe/ea)	1	ea	15,000.00	15,000				
			4	2 inch air valves	1.7	ea	1,000.00	1,700				
			5	18" Slide Gate - steel (for draining)	1	ea	5,000.00	5,000				
			6	2' x 3' Adjustable Weir (354 lbs/ea)	2	ea	7,000.00	14,000				
				Manual handwheel operator - 1680 lb capacity								
			7	6" valve (assume gate valve)	1	ea	1,500.00	1,500				
			8	Water Meter	1	ea	15,000.00	15,000				
			9	Mobilization (+/- 5%)				21,604				
			10	Unlisted Items (+/- 15%)				66,327				
				Subtotal				520,000				
				Contingencies (+/- 20%)				110,000				
				Field Cost - Waterways				630,000				

CONSTRUCTION COST ESTIMATE

PROJECT: Central Valley Project	PREPARED BY: Regional Office, Sacramento, CA
DIVISION: West San Joaquin Division	ESTIMATE DATE: July 2007 (Revised after DEC)
UNIT: San Luis Unit -- Drainage System -- Westlands Water District-North	ESTIMATE TYPE: Feasibility
FEATURE: Drainage Feature Re-Evaluation Feasibility Study	PRICE LEVEL: April 2006

PROPERTY CLASS	IDENTIFIED PROPERTY	PLANT ACCOUNT	ITEM	DESCRIPTION	QUANTITY	UNIT	PRICE	AMOUNT	FIELD COST	TOTAL FIELD COST	NONCONTRACT COST	CONSTRUCTION COST
12	05			MITIGATION (continued)								
				(4) APPURTENANT FACILITIES (continued)								
		160		Pumps and Prime Movers					230,000			
			1	Vertical Turbine Unit; 2-stg; 1 CFS; Rated 450 gpm; TDH=20 ft.	1	ea	50,000.00	50,000				
				w/ TEFC Induction motor @ 3 hp; 1200 rpm								
			2	Vertical Turbine Unit; 1-stg; 5 CFS; Rated 2500 gpm; TDH=25 ft.	1	ea	100,000.00	100,000				
				w/ TEFC Induction motor @ 25 hp; 900 rpm								
			3	Mobilization (+/- 5%)				7,500				
			4	Unlisted Items (+/- 15%)				23,625				
				Subtotal				190,000				
				Contingencies (+/- 20%)				40,000				
				Field Cost - Pumps and Prime Movers				230,000				

CONSTRUCTION COST ESTIMATE

PROJECT: Central Valley Project	PREPARED BY: Regional Office, Sacramento, CA
DIVISION: West San Joaquin Division	ESTIMATE DATE: July 2007 (Revised after DEC)
UNIT: San Luis Unit -- Drainage System -- Westlands Water District-Central	ESTIMATE TYPE: Feasibility
FEATURE: Drainage Feature Re-Evaluation Feasibility Study	PRICE LEVEL: April 2006

PROPERTY CLASS	IDENTIFIED PROPERTY	PLANT ACCOUNT	ITEM	DESCRIPTION	QUANTITY	UNIT	PRICE	AMOUNT	FIELD COST	TOTAL FIELD COST	NONCONTRACT COST	CONSTRUCTION COST
				WWD CENTRAL AREA - TOTAL PROJECT COST						380,532,000	100,873,000	481,405,000
03				PUMPING PLANTS						6,625,000	1,775,000	8,400,000
	01			PUMPING PLANT D - This pumping plant is located next to Reuse						1,766,500	433,500	2,200,000
				Area D. This plant is rated at 50 hp; Q = 925 GPM; TDH = 155 ft.								
		100		Land and Rights								
				Costs of Land and Rights have been included with Reuse Area D.								
		130		Structures and Improvements					630,000			
			1	Excavation, common	762	cy	15.00	11,430				
			2	Backfill, common	667	cy	10.00	6,670				
			3	Compacted backfill, common	667	cy	10.00	6,670				
			4	Excavation, braced trench	27	cy	500.00	13,500				
			5	Backfill, braced trench	22	cy	450.00	9,900				
			6	Compacted backfill, braced trench	22	cy	300.00	6,600				
			7	Gravel surfacing	81	cy	65.00	5,265				
			8	Unwatering/dewatering, 8' depth (2 month duration)	1	ls	250,000.00	250,000				
			9	Concrete	40	cy	1,000.00	40,000				
			10	Furnishing and handling cement	11	ton	170.00	1,870				
			11	Furnishing and placing reinforcement	5,720	lb	1.75	10,010				
			12	Chain link fencing	279	lf	30.00	8,370				
			13	CMU Wall (8' high, 15 lf long)	120	sf	100.00	12,000				
			14	Structural Steel - Sunshades (20' x 26'; 10,300 lbs)	1	ea	30,000.00	30,000				
			15	Mobilization (+/- 5%)				20,614				
			16	Unlisted Items (+/- 15%)				64,935				
			17	Allowance for Procurement Strategies (+/- 5%)				22,166				
				Subtotal				520,000				
				Contingencies (+/- 20%)				110,000				
				Field Cost - Structures and Improvements				630,000				

CONSTRUCTION COST ESTIMATE

PROJECT: Central Valley Project	PREPARED BY: Regional Office, Sacramento, CA
DIVISION: West San Joaquin Division	ESTIMATE DATE: July 2007 (Revised after DEC)
UNIT: San Luis Unit -- Drainage System -- Westlands Water District-Central	ESTIMATE TYPE: Feasibility
FEATURE: Drainage Feature Re-Evaluation Feasibility Study	PRICE LEVEL: April 2006

PROPERTY CLASS	IDENTIFIED PROPERTY	PLANT ACCOUNT	ITEM	DESCRIPTION	QUANTITY	UNIT	PRICE	AMOUNT	FIELD COST	TOTAL FIELD COST	NONCONTRACT COST	CONSTRUCTION COST
03	01			PUMPING PLANT D (continued)								
		152		Waterways					75,000			
			1	Steel piping & flanges for manifold	3,482	lb	6.00	20,892				
			2	Motor Op. BFV; Class 150; D=8"; 320 lb/valve	1	ea	18,750.00	18,750				
			3	Tilt Disk Ck. Valve; Class 125; D=8"; 265 lb/valve	1	ea	8,500.00	8,500				
			4	Ball Valve for AV; D=1"; 2 lbs/valve	2	ea	170.00	340				
			5	Air Valves; D=1"; 35 lbs/valve	2	ea	300.00	600				
			6	Mobilization (+/- 5%)				2,454				
			7	Unlisted Items (+/- 15%)				7,730				
			8	Allowance for Procurement Strategies (+/- 5%)				2,733				
				Subtotal				62,000				
				Contingencies (+/- 20%)				13,000				
				Field Cost - Waterways				75,000				
		153		Waterway Structures					446,500			
				(1) Flow Meter					16,500			
			1	Pipe Flowmeter; D = 12"	1	ea	11,000.00	11,000				
			2	Mobilization (+/- 5%)				550				
			3	Unlisted Items (+/- 15%)				1,733				
			4	Allowance for Procurement Strategies (+/- 5%)				718				
				Subtotal				14,000				
				Contingencies (+/- 20%)				2,500				
				Field Cost - (1) Flow Meter				16,500				

CONSTRUCTION COST ESTIMATE

PROJECT: Central Valley Project	PREPARED BY: Regional Office, Sacramento, CA
DIVISION: West San Joaquin Division	ESTIMATE DATE: July 2007 (Revised after DEC)
UNIT: San Luis Unit -- Drainage System -- Westlands Water District-Central	ESTIMATE TYPE: Feasibility
FEATURE: Drainage Feature Re-Evaluation Feasibility Study	PRICE LEVEL: April 2006

PROPERTY CLASS	IDENTIFIED PROPERTY	PLANT ACCOUNT	ITEM	DESCRIPTION	QUANTITY	UNIT	PRICE	AMOUNT	FIELD COST	TOTAL FIELD COST	NONCONTRACT COST	CONSTRUCTION COST
03	01			PUMPING PLANT D (continued)								
		153		Waterway Structures (continued)								
				(2) Regulating Tank; D = 26 ft; H = 15 ft					430,000			
			1	Strip and Clear, 12" depth	180	cy	6.50	1,170				
			2	Compacting embankment	420	cy	15.00	6,300				
			3	Gravel surfacing	70	cy	65.00	4,550				
			4	Concrete	70	cy	1,000.00	70,000				
			5	Cement	20	ton	170.00	3,400				
			6	Reinforcement	10,000	lb	1.75	17,500				
			7	Chain link fence	260	lf	30.00	7,800				
			8	Precast Concrete Piles (reinforced, 60 ft deep)	13	ea	4,000.00	52,000				
			9	F&I Steel Regulating Tank; D=26 ft; H=15 ft; w/ roof	1	ea	120,000.00	120,000				
			10	Mobilization (+/- 5%)				14,136				
			11	Unlisted Items (+/- 15%)				44,528				
			12	Allowance for Procurement Strategies (+/- 5%)				18,616				
				Subtotal				360,000				
				Contingencies (+/- 20%)				70,000				
				Field Cost - (2) Regulating Tank				430,000				
				Field Cost - Waterway Structures				446,500				
		154		Waterway Protective Works					120,000			
			1	Air Chamber; D=9 ft.; cylindrical shaped; 11,000 lbs	1	ea	80,000.00	80,000				
			2	Mobilization (+/- 5%)				4,000				
			3	Unlisted Items (+/- 15%)				12,600				
			4	Allowance for Procurement Strategies (+/- 5%)				3,400				
				Subtotal				100,000				
				Contingencies (+/- 20%)				20,000				
				Field Cost - Waterway Protective Works				120,000				

CONSTRUCTION COST ESTIMATE

PROJECT: Central Valley Project	PREPARED BY: Regional Office, Sacramento, CA
DIVISION: West San Joaquin Division	ESTIMATE DATE: July 2007 (Revised after DEC)
UNIT: San Luis Unit -- Drainage System -- Westlands Water District-Central	ESTIMATE TYPE: Feasibility
FEATURE: Drainage Feature Re-Evaluation Feasibility Study	PRICE LEVEL: April 2006

PROPERTY CLASS	IDENTIFIED PROPERTY	PLANT ACCOUNT	ITEM	DESCRIPTION	QUANTITY	UNIT	PRICE	AMOUNT	FIELD COST	TOTAL FIELD COST	NONCONTRACT COST	CONSTRUCTION COST
03	01			PUMPING PLANT D (continued)								
		160		Pumps and Prime Movers					320,000			
			1	Vertical Turbine Unit; 3-stg; 1770 rpm; Rated 925 gpm; TDH=155 ft.	3,820	lb	50.00	191,000				
				W/ vert Induction motor @ 50 hp; 1800 rpm; 3ph / 60 hz / 460 v								
			2	Flygt, 8" Std. CP-3152 submersible wastewater pump; 1750 rpm	800	lb	25.00	20,000				
				Q = 900 gpm; TDH = 42 ft.; w/ 20 hp submersible motor								
			3	Mobilization (+/- 5%)				10,550				
			4	Unlisted Items (+/- 15%)				33,233				
			5	Allowance for Procurement Strategies (+/- 5%)				15,218				
				Subtotal				270,000				
				Contingencies (+/- 20%)				50,000				
				Field Cost - Pumps and Prime Movers				320,000				
		170		Accessory Electrical Equipment					65,000			
			1	F&I PVC coated rigid steel conduit - 3/4 Inch	50	ft	15.00	750				
			2	F&I PVC coated rigid steel conduit - 2 Inch	100	ft	31.00	3,100				
			3	F&I single conductor - 12 AWG	200	ft	2.50	500				
			4	F&I single conductor - 4 AWG	200	ft	4.00	800				
			5	F&I single conductor - 4/0 AWG	200	ft	15.00	3,000				
			6	F&I grounding system - 4/0 bare copper	200	ft	12.00	2,400				
			7	F&I grounding system - 3/4" dia. 10 foot ground rod	8	ea	175.00	1,400				
			8	F&I Distribution Board w/ enclosure, trips, & A frames	1	ls	5,816.00	5,816				
			9	F&I transformer and load center, w/ enclosure, breakers, and	1	ea	4,000.00	4,000				
				7.5 KVA, single phase, 480V-240/120 V								
			10	F&I Control board for main pump, w/enclosure, relays, switches,	1	ls	11,000.00	11,000				
				fuse block, terminal block, & 50 hp motor starter								
			11	F&I Control board for submersible wastewater pump	1	ls	10,000.00	10,000				

CONSTRUCTION COST ESTIMATE

PROJECT: Central Valley Project	PREPARED BY: Regional Office, Sacramento, CA
DIVISION: West San Joaquin Division	ESTIMATE DATE: July 2007 (Revised after DEC)
UNIT: San Luis Unit -- Drainage System -- Westlands Water District-Central	ESTIMATE TYPE: Feasibility
FEATURE: Drainage Feature Re-Evaluation Feasibility Study	PRICE LEVEL: April 2006

PROPERTY CLASS	IDENTIFIED PROPERTY	PLANT ACCOUNT	ITEM	DESCRIPTION	QUANTITY	UNIT	PRICE	AMOUNT	FIELD COST	TOTAL FIELD COST	NONCONTRACT COST	CONSTRUCTION COST
03	01			PUMPING PLANT D (continued)								
		170		Accessory Electrical Equipment (continued)								
			12	Mobilization (+/- 5%)				2,138				
			13	Unlisted Items (+/- 15%)				6,736				
			14	Allowance for Procurement Strategies (+/- 5%)				2,360				
				Subtotal				54,000				
				Contingencies (+/- 20%)				11,000				
				Field Cost - Accessory Electrical Equipment				65,000				
		175		Station Equipment					110,000			
			1	Oil filled, distribution power transformer, 112.5 kVA; 12.47kV-480V	1	ea	40,000.00	40,000				
			2	7.65-kV MCOV metal oxide distribution class arrester	3	ea	2,000.00	6,000				
			3	3-phase, 15-kV fused disconnect switch, 5E-10E	1	ea	25,000.00	25,000				
			4	50 foot wood pole for incoming line	1	ea	2,000.00	2,000				
			5	Mobilization (+/- 5%)				3,650				
			6	Unlisted Items (+/- 15%)				11,498				
			7	Allowance for Procurement Strategies (+/- 5%)				4,853				
				Subtotal				93,000				
				Contingencies (+/- 20%)				17,000				
				Field Cost - Station Equipment				110,000				
				FACILITATING SERVICES (2%)								
				INVESTIGATIONS (3%)								
				DESIGNS & SPECIFICATIONS (10%)								
				CONSTRUCTION SUPERVISION (12%)								
				OTHER COSTS (+/- 27%)							433,500	

CONSTRUCTION COST ESTIMATE

PROJECT: Central Valley Project	PREPARED BY: Regional Office, Sacramento, CA
DIVISION: West San Joaquin Division	ESTIMATE DATE: July 2007 (Revised after DEC)
UNIT: San Luis Unit -- Drainage System -- Westlands Water District-Central	ESTIMATE TYPE: Feasibility
FEATURE: Drainage Feature Re-Evaluation Feasibility Study	PRICE LEVEL: April 2006

PROPERTY CLASS	IDENTIFIED PROPERTY	PLANT ACCOUNT	ITEM	DESCRIPTION	QUANTITY	UNIT	PRICE	AMOUNT	FIELD COST	TOTAL FIELD COST	NONCONTRACT COST	CONSTRUCTION COST
03	02			PUMPING PLANT E - This pumping plant is located next to Reuse						1,385,500	364,500	1,750,000
				Area E. This plant is rated at 15 hp; Q = 296 GPM; TDH = 140 ft.								
		100		Land and Rights								
				Costs of Land and Rights have been included with Reuse Area E.								
		130		Structures and Improvements					640,000			
			1	Excavation, common	820	cy	15.00	12,300				
			2	Backfill, common	720	cy	10.00	7,200				
			3	Compacted backfill, common	720	cy	10.00	7,200				
			4	Excavation, braced trench	22	cy	500.00	11,000				
			5	Backfill, braced trench	18	cy	450.00	8,100				
			6	Compacted backfill, braced trench	18	cy	300.00	5,400				
			7	Gravel surfacing	84	cy	65.00	5,460				
			8	Unwatering/dewatering, 7' depth (2 month duration)	1	ls	250,000.00	250,000				
			9	Concrete	48	cy	1,000.00	48,000				
			10	Furnishing and handling cement	14	ton	170.00	2,380				
			11	Furnishing and placing reinforcement	7,020	lb	1.75	12,285				
			12	Chain link fencing	291	lf	30.00	8,730				
			13	CMU Wall (8' high, 15 lf long)	120	sf	100.00	12,000				
			14	Structural Steel - Sunshades (20' x 26'; 10,300 lbs)	1	ea	30,000.00	30,000				
			15	Mobilization (+/- 5%)				21,003				
			16	Unlisted Items (+/- 15%)				66,159				
			17	Allowance for Procurement Strategies (+/- 5%)				22,784				
				Subtotal				530,000				
				Contingencies (+/- 20%)				110,000				
				Field Cost - Structures and Improvements				640,000				

CONSTRUCTION COST ESTIMATE

PROJECT: Central Valley Project	PREPARED BY: Regional Office, Sacramento, CA
DIVISION: West San Joaquin Division	ESTIMATE DATE: July 2007 (Revised after DEC)
UNIT: San Luis Unit -- Drainage System -- Westlands Water District-Central	ESTIMATE TYPE: Feasibility
FEATURE: Drainage Feature Re-Evaluation Feasibility Study	PRICE LEVEL: April 2006

PROPERTY CLASS	IDENTIFIED PROPERTY	PLANT ACCOUNT	ITEM	DESCRIPTION	QUANTITY	UNIT	PRICE	AMOUNT	FIELD COST	TOTAL FIELD COST	NONCONTRACT COST	CONSTRUCTION COST
03	02			PUMPING PLANT E (continued)								
		152		Waterways					58,000			
			1	Steel piping & flanges for manifold	2,069	lb	6.00	12,414				
			2	Motor Op. BFV; Class 150; D=6"; 245 lb/valve	1	ea	17,500.00	17,500				
			3	Tilt Disk Ck. Valve; Class 125; D=6"; 164 lb/valve	1	ea	7,500.00	7,500				
			4	Ball Valve for AV; D=1"; 2 lbs/valve	2	ea	170.00	340				
			5	Air Valves; D=1"; 35 lbs/valve	2	ea	300.00	600				
			6	Mobilization (+/- 5%)				1,918				
			7	Unlisted Items (+/- 15%)				6,041				
			8	Allowance for Procurement Strategies (+/- 5%)				2,688				
				Subtotal				49,000				
				Contingencies (+/- 20%)				9,000				
				Field Cost - Waterways				58,000				
		153		Waterway Structures					13,500			
			1	Pipe Flowmeter; D = 7"	1	ea	9,000.00	9,000				
			2	Mobilization (+/- 5%)				450				
			3	Unlisted Items (+/- 15%)				1,418				
			4	Allowance for Procurement Strategies (+/- 5%)				633				
				Subtotal				11,500				
				Contingencies (+/- 20%)				2,000				
				Field Cost - Waterway Structures				13,500				

CONSTRUCTION COST ESTIMATE

PROJECT: Central Valley Project	PREPARED BY: Regional Office, Sacramento, CA
DIVISION: West San Joaquin Division	ESTIMATE DATE: July 2007 (Revised after DEC)
UNIT: San Luis Unit -- Drainage System -- Westlands Water District-Central	ESTIMATE TYPE: Feasibility
FEATURE: Drainage Feature Re-Evaluation Feasibility Study	PRICE LEVEL: April 2006

PROPERTY CLASS	IDENTIFIED PROPERTY	PLANT ACCOUNT	ITEM	DESCRIPTION	QUANTITY	UNIT	PRICE	AMOUNT	FIELD COST	TOTAL FIELD COST	NONCONTRACT COST	CONSTRUCTION COST
03	02			PUMPING PLANT E (continued)								
		154		Waterway Protective Works					240,000			
			1	Air Chamber; D=15 ft.; cylindrical shaped; 22,800 lbs	1	ea	160,000.00	160,000				
			2	Mobilization (+/- 5%)				8,000				
			3	Unlisted Items (+/- 15%)				25,200				
			4	Allowance for Procurement Strategies (+/- 5%)				6,800				
				Subtotal				200,000				
				Contingencies (+/- 20%)				40,000				
				Field Cost - Waterway Protective Works				240,000				
		160		Pumps and Prime Movers					270,000			
			1	Vertical Turbine Unit; 3-stg; 1770 rpm; Rated 296 gpm; TDH=140 ft.	2,440	lb	65.00	158,600				
				W/ vert Induction motor @ 15 hp; 1800 rpm; 3ph / 60 hz / 460 v								
			2	Flygt, 8" Std. CP-3152 submersible wastewater pump; 1750 rpm	800	lb	25.00	20,000				
				Q = 900 gpm; TDH = 42 ft.; w/ 20 hp submersible motor								
			3	Mobilization (+/- 5%)				8,930				
			4	Unlisted Items (+/- 15%)				28,130				
			5	Allowance for Procurement Strategies (+/- 5%)				14,341				
				Subtotal				230,000				
				Contingencies (+/- 20%)				40,000				
				Field Cost - Pumps and Prime Movers				270,000				

CONSTRUCTION COST ESTIMATE

PROJECT: Central Valley Project	PREPARED BY: Regional Office, Sacramento, CA
DIVISION: West San Joaquin Division	ESTIMATE DATE: July 2007 (Revised after DEC)
UNIT: San Luis Unit -- Drainage System -- Westlands Water District-Central	ESTIMATE TYPE: Feasibility
FEATURE: Drainage Feature Re-Evaluation Feasibility Study	PRICE LEVEL: April 2006

PROPERTY CLASS	IDENTIFIED PROPERTY	PLANT ACCOUNT	ITEM	DESCRIPTION	QUANTITY	UNIT	PRICE	AMOUNT	FIELD COST	TOTAL FIELD COST	NONCONTRACT COST	CONSTRUCTION COST
03	02			PUMPING PLANT E (continued)								
		170		Accessory Electrical Equipment					54,000			
			1	F&I PVC coated rigid steel conduit - 3/4 Inch	100	ft	15.00	1,500				
			2	F&I PVC coated rigid steel conduit - 2 Inch	50	ft	31.00	1,550				
			3	F&I single conductor - 12 AWG	200	ft	2.50	500				
			4	F&I single conductor - 10 AWG	200	ft	3.00	600				
			5	F&I single conductor - 1 AWG	200	ft	5.50	1,100				
			6	F&I grounding system - 4/0 bare copper	200	ft	12.00	2,400				
			7	F&I grounding system - 3/4" dia. 10 foot ground rod	8	ea	175.00	1,400				
			8	F&I Distribution Board w/ enclosure, trips, & A frames	1	ls	2,650.00	2,650				
			9	F&I transformer and load center, w/ enclosure, breakers, and	1	ea	4,000.00	4,000				
				7.5 KVA, single phase, 480V-240/120 V								
			10	F&I Control board for main pump, w/enclosure, relays, switches,	1	ls	10,000.00	10,000				
				fuse block, terminal block, & 15 hp motor starter								
			11	F&I Control board for submersible wastewater pump	1	ls	10,000.00	10,000				
			12	Mobilization (+/- 5%)				1,785				
			13	Unlisted Items (+/- 15%)				5,623				
			14	Allowance for Procurement Strategies (+/- 5%)				1,892				
				Subtotal				45,000				
				Contingencies (+/- 20%)				9,000				
				Field Cost - Accessory Electrical Equipment				54,000				

CONSTRUCTION COST ESTIMATE

PROJECT: Central Valley Project	PREPARED BY: Regional Office, Sacramento, CA
DIVISION: West San Joaquin Division	ESTIMATE DATE: July 2007 (Revised after DEC)
UNIT: San Luis Unit -- Drainage System -- Westlands Water District-Central	ESTIMATE TYPE: Feasibility
FEATURE: Drainage Feature Re-Evaluation Feasibility Study	PRICE LEVEL: April 2006

PROPERTY CLASS	IDENTIFIED PROPERTY	PLANT ACCOUNT	ITEM	DESCRIPTION	QUANTITY	UNIT	PRICE	AMOUNT	FIELD COST	TOTAL FIELD COST	NONCONTRACT COST	CONSTRUCTION COST
03	02			PUMPING PLANT E (continued)								
		175		Station Equipment					110,000			
			1	Oil filled, distribution power transformer, 112.5 kVA; 12.47kV-480V	1	ea	40,000.00	40,000				
			2	7.65-kV MCOV metal oxide distribution class arrester	3	ea	2,000.00	6,000				
			3	3-phase, 15-kV fused disconnect switch, 5E-10E	1	ea	25,000.00	25,000				
			4	50 foot wood pole for incoming line	1	ea	2,000.00	2,000				
			5	Mobilization (+/- 5%)				3,650				
			6	Unlisted Items (+/- 15%)				11,498				
			7	Allowance for Procurement Strategies (+/- 5%)				4,853				
				Subtotal				93,000				
				Contingencies (+/- 20%)				17,000				
				Field Cost - Station Equipment				110,000				
				FACILITATING SERVICES (2%)								
				INVESTIGATIONS (3%)								
				DESIGNS & SPECIFICATIONS (10%)								
				CONSTRUCTION SUPERVISION (12%)								
				OTHER COSTS (+/- 27%)							364,500	

CONSTRUCTION COST ESTIMATE

PROJECT: Central Valley Project	PREPARED BY: Regional Office, Sacramento, CA
DIVISION: West San Joaquin Division	ESTIMATE DATE: July 2007 (Revised after DEC)
UNIT: San Luis Unit -- Drainage System -- Westlands Water District-Central	ESTIMATE TYPE: Feasibility
FEATURE: Drainage Feature Re-Evaluation Feasibility Study	PRICE LEVEL: April 2006

PROPERTY CLASS	IDENTIFIED PROPERTY	PLANT ACCOUNT	ITEM	DESCRIPTION	QUANTITY	UNIT	PRICE	AMOUNT	FIELD COST	TOTAL FIELD COST	NONCONTRACT COST	CONSTRUCTION COST
03	03			PUMPING PLANT F - This pumping plant is located next to Reuse						1,043,500	306,500	1,350,000
				Area F. This plant is rated at 5 hp; Q = 154 GPM; TDH = 17 ft.								
		100		Land and Rights								
				Costs of Land and Rights have been included with Reuse Area F.								
		130		Structures and Improvements					590,000			
			1	Excavation, common	691	cy	15.00	10,365				
			2	Backfill, common	603	cy	10.00	6,030				
			3	Compacted backfill, common	603	cy	10.00	6,030				
			4	Excavation, braced trench	20	cy	500.00	10,000				
			5	Backfill, braced trench	16	cy	450.00	7,200				
			6	Compacted backfill, braced trench	16	cy	300.00	4,800				
			7	Gravel surfacing	70	cy	65.00	4,550				
			8	Unwatering/dewatering, 7' depth (2 month duration)	1	ls	250,000.00	250,000				
			9	Concrete	31	cy	1,000.00	31,000				
			10	Furnishing and handling cement	9	ton	170.00	1,530				
			11	Furnishing and placing reinforcement	4,420	lb	1.75	7,735				
			12	Chain link fencing	257	lf	30.00	7,710				
			13	CMU Wall (8' high, 15 lf long)	120	sf	100.00	12,000				
			14	Structural Steel - Sunshades (20' x 26'; 10,300 lbs)	1	ea	30,000.00	30,000				
			15	Mobilization (+/- 5%)				19,448				
			16	Unlisted Items (+/- 15%)				61,260				
			17	Allowance for Procurement Strategies (+/- 5%)				20,343				
				Subtotal				490,000				
				Contingencies (+/- 20%)				100,000				
				Field Cost - Structures and Improvements				590,000				

CONSTRUCTION COST ESTIMATE

PROJECT: Central Valley Project	PREPARED BY: Regional Office, Sacramento, CA
DIVISION: West San Joaquin Division	ESTIMATE DATE: July 2007 (Revised after DEC)
UNIT: San Luis Unit -- Drainage System -- Westlands Water District-Central	ESTIMATE TYPE: Feasibility
FEATURE: Drainage Feature Re-Evaluation Feasibility Study	PRICE LEVEL: April 2006

PROPERTY CLASS	IDENTIFIED PROPERTY	PLANT ACCOUNT	ITEM	DESCRIPTION	QUANTITY	UNIT	PRICE	AMOUNT	FIELD COST	TOTAL FIELD COST	NONCONTRACT COST	CONSTRUCTION COST
03	03			PUMPING PLANT F (continued)								
		152		Waterways					54,000			
			1	Steel piping & flanges for manifold	1,899	lb	6.00	11,394				
			2	Motor Op. BFV; Class 150; D=4"; 226 lb/valve	1	ea	16,250.00	16,250				
			3	Tilt Disk Ck. Valve; Class 125; D=4"; 82 lb/valve	1	ea	7,000.00	7,000				
			4	Ball Valve for AV; D=1"; 2 lbs/valve	2	ea	170.00	340				
			5	Air Valves; D=1"; 35 lbs/valve	2	ea	300.00	600				
			6	Mobilization (+/- 5%)				1,779				
			7	Unlisted Items (+/- 15%)				5,604				
			8	Allowance for Procurement Strategies (+/- 5%)				2,032				
				Subtotal				45,000				
				Contingencies (+/- 20%)				9,000				
				Field Cost - Waterways				54,000				
		153		Waterway Structures					14,500			
			1	Pipe Flowmeter; D = 8"	1	ea	9,500.00	9,500				
			2	Mobilization (+/- 5%)				475				
			3	Unlisted Items (+/- 15%)				1,496				
			4	Allowance for Procurement Strategies (+/- 5%)				529				
				Subtotal				12,000				
				Contingencies (+/- 20%)				2,500				
				Field Cost - Waterway Structures				14,500				

CONSTRUCTION COST ESTIMATE

PROJECT: Central Valley Project	PREPARED BY: Regional Office, Sacramento, CA
DIVISION: West San Joaquin Division	ESTIMATE DATE: July 2007 (Revised after DEC)
UNIT: San Luis Unit -- Drainage System -- Westlands Water District-Central	ESTIMATE TYPE: Feasibility
FEATURE: Drainage Feature Re-Evaluation Feasibility Study	PRICE LEVEL: April 2006

PROPERTY CLASS	IDENTIFIED PROPERTY	PLANT ACCOUNT	ITEM	DESCRIPTION	QUANTITY	UNIT	PRICE	AMOUNT	FIELD COST	TOTAL FIELD COST	NONCONTRACT COST	CONSTRUCTION COST
03	03			PUMPING PLANT F (continued)								
		160		Pumps and Prime Movers					240,000			
			1	Vertical Turbine Unit; 1-stg; 1760 rpm; Rated 154 gpm; TDH=17 ft.	1,620	lb	85.00	137,700				
				W/ vert Induction motor @ 5 hp; 1800 rpm; 3ph / 60 hz / 460 v								
			2	Flygt, 8" Std. CP-3152 submersible wastewater pump; 1750 rpm	800	lb	25.00	20,000				
				Q = 900 gpm; TDH = 42 ft.; w/ 20 hp submersible motor								
			3	Mobilization (+/- 5%)				7,885				
			4	Unlisted Items (+/- 15%)				24,838				
			5	Allowance for Procurement Strategies (+/- 5%)				9,577				
				Subtotal				200,000				
				Contingencies (+/- 20%)				40,000				
				Field Cost - Pumps and Prime Movers				240,000				
		170		Accessory Electrical Equipment					57,000			
			1	F&I PVC coated rigid steel conduit - 3/4 Inch	100	ft	15.00	1,500				
			2	F&I PVC coated rigid steel conduit - 2 Inch	50	ft	31.00	1,550				
			3	F&I single conductor - 12 AWG	400	ft	2.50	1,000				
			4	F&I single conductor - 1 AWG	200	ft	5.50	1,100				
			5	F&I grounding system - 4/0 bare copper	200	ft	12.00	2,400				
			6	F&I grounding system - 3/4" dia. 10 foot ground rod	8	ea	175.00	1,400				
			7	F&I Distribution Board w/ enclosure, trips, & A frames	1	ls	2,850.00	2,850				
			8	F&I transformer and load center, w/ enclosure, breakers, and	1	ea	4,000.00	4,000				
				7.5 KVA, single phase, 480V-240/120 V								
			9	F&I Control board for main pump, w/enclosure, relays, switches,	1	ls	9,500.00	9,500				
				fuse block, terminal block, & 5 hp motor starter								
			10	F&I Control board for submersible wastewater pump	1	ls	10,000.00	10,000				
			11	Furnish and install 100 A, 480V, 3 Phase meter socket	1	ea	500.00	500				
			12	Furnish and install 100 A, 600V, 3 Phase fused disconnect switch	1	ea	1,500.00	1,500				

CONSTRUCTION COST ESTIMATE

PROJECT: Central Valley Project	PREPARED BY: Regional Office, Sacramento, CA
DIVISION: West San Joaquin Division	ESTIMATE DATE: July 2007 (Revised after DEC)
UNIT: San Luis Unit -- Drainage System -- Westlands Water District-Central	ESTIMATE TYPE: Feasibility
FEATURE: Drainage Feature Re-Evaluation Feasibility Study	PRICE LEVEL: April 2006

PROPERTY CLASS	IDENTIFIED PROPERTY	PLANT ACCOUNT	ITEM	DESCRIPTION	QUANTITY	UNIT	PRICE	AMOUNT	FIELD COST	TOTAL FIELD COST	NONCONTRACT COST	CONSTRUCTION COST
03	03			PUMPING PLANT F (continued)								
		170		Accessory Electrical Equipment (continued)								
			13	Mobilization (+/- 5%)				1,865				
			14	Unlisted Items (+/- 15%)				5,875				
			15	Allowance for Procurement Strategies (+/- 5%)				1,960				
				Subtotal				47,000				
				Contingencies (+/- 20%)				10,000				
				Field Cost - Accessory Electrical Equipment				57,000				
		175		Station Equipment					88,000			
			1	Oil filled, distribution power transformer, 45 kVA; 12.47kV-480V	1	ea	25,000.00	25,000				
			2	7.65-kV MCOV metal oxide distribution class arrester	3	ea	2,000.00	6,000				
			3	3-phase, 15-kV fused disconnect switch, 2E-5E	1	ea	25,000.00	25,000				
			4	50 foot wood pole for incoming line	1	ea	2,000.00	2,000				
			5	Mobilization (+/- 5%)				2,900				
			6	Unlisted Items (+/- 15%)				9,135				
			7	Allowance for Procurement Strategies (+/- 5%)				3,965				
				Subtotal				74,000				
				Contingencies (+/- 20%)				14,000				
				Field Cost - Station Equipment				88,000				
				FACILITATING SERVICES (2%)								
				INVESTIGATIONS (3%)								
				DESIGNS & SPECIFICATIONS (10%)								
				CONSTRUCTION SUPERVISION (12%)								
				OTHER COSTS (+/- 27%)							306,500	

CONSTRUCTION COST ESTIMATE

PROJECT: Central Valley Project	PREPARED BY: Regional Office, Sacramento, CA
DIVISION: West San Joaquin Division	ESTIMATE DATE: July 2007 (Revised after DEC)
UNIT: San Luis Unit -- Drainage System -- Westlands Water District-Central	ESTIMATE TYPE: Feasibility
FEATURE: Drainage Feature Re-Evaluation Feasibility Study	PRICE LEVEL: April 2006

PROPERTY CLASS	IDENTIFIED PROPERTY	PLANT ACCOUNT	ITEM	DESCRIPTION	QUANTITY	UNIT	PRICE	AMOUNT	FIELD COST	TOTAL FIELD COST	NONCONTRACT COST	CONSTRUCTION COST
03	04			PUMPING PLANT G - This pumping plant is located next to Reuse						1,131,500	318,500	1,450,000
				Area G. This plant is rated at 10 hp; Q = 405 GPM; TDH = 70 ft.								
		100		Land and Rights								
				Costs of Land and Rights have been included with Reuse Area G.								
		130		Structures and Improvements					620,000			
			1	Excavation, common	739	cy	15.00	11,085				
			2	Backfill, common	646	cy	10.00	6,460				
			3	Compacted backfill, common	646	cy	10.00	6,460				
			4	Excavation, braced trench	25	cy	500.00	12,500				
			5	Backfill, braced trench	20	cy	450.00	9,000				
			6	Compacted backfill, braced trench	20	cy	300.00	6,000				
			7	Gravel surfacing	78	cy	65.00	5,070				
			8	Unwatering/dewatering, 8' depth (2 month duration)	1	ls	250,000.00	250,000				
			9	Concrete	37	cy	1,000.00	37,000				
			10	Furnishing and handling cement	10	ton	170.00	1,700				
			11	Furnishing and placing reinforcement	5,320	lb	1.75	9,310				
			12	Chain link fencing	273	lf	30.00	8,190				
			13	CMU Wall (8' high, 15 lf long)	120	sf	100.00	12,000				
			14	Structural Steel - Sunshades (20' x 26'; 10,300 lbs)	1	ea	30,000.00	30,000				
			15	Mobilization (+/- 5%)				20,239				
			16	Unlisted Items (+/- 15%)				63,752				
			17	Allowance for Procurement Strategies (+/- 5%)				21,234				
				Subtotal				510,000				
				Contingencies (+/- 20%)				110,000				
				Field Cost - Structures and Improvements				620,000				

CONSTRUCTION COST ESTIMATE

PROJECT: Central Valley Project	PREPARED BY: Regional Office, Sacramento, CA
DIVISION: West San Joaquin Division	ESTIMATE DATE: July 2007 (Revised after DEC)
UNIT: San Luis Unit -- Drainage System -- Westlands Water District-Central	ESTIMATE TYPE: Feasibility
FEATURE: Drainage Feature Re-Evaluation Feasibility Study	PRICE LEVEL: April 2006

PROPERTY CLASS	IDENTIFIED PROPERTY	PLANT ACCOUNT	ITEM	DESCRIPTION	QUANTITY	UNIT	PRICE	AMOUNT	FIELD COST	TOTAL FIELD COST	NONCONTRACT COST	CONSTRUCTION COST
03	04			PUMPING PLANT G (continued)								
		152		Waterways					56,000			
			1	Steel piping & flanges for manifold	1,779	lb	6.00	10,674				
			2	Motor Op. BFV; Class 150; D=6"; 245 lb/valve	1	ea	17,500.00	17,500				
			3	Tilt Disk Ck. Valve; Class 125; D=6"; 164 lb/valve	1	ea	7,500.00	7,500				
			4	Ball Valve for AV; D=1"; 2 lbs/valve	2	ea	170.00	340				
			5	Air Valves; D=1"; 35 lbs/valve	2	ea	300.00	600				
			6	Mobilization (+/- 5%)				1,831				
			7	Unlisted Items (+/- 15%)				5,767				
			8	Allowance for Procurement Strategies (+/- 5%)				1,789				
				Subtotal				46,000				
				Contingencies (+/- 20%)				10,000				
				Field Cost - Waterways				56,000				
		153		Waterway Structures					13,500			
			1	Pipe Flowmeter; D = 7"	1	ea	9,000.00	9,000				
			2	Mobilization (+/- 5%)				450				
			3	Unlisted Items (+/- 15%)				1,418				
			4	Allowance for Procurement Strategies (+/- 5%)				633				
				Subtotal				11,500				
				Contingencies (+/- 20%)				2,000				
				Field Cost - Waterway Structures				13,500				

CONSTRUCTION COST ESTIMATE

PROJECT: Central Valley Project	PREPARED BY: Regional Office, Sacramento, CA
DIVISION: West San Joaquin Division	ESTIMATE DATE: July 2007 (Revised after DEC)
UNIT: San Luis Unit -- Drainage System -- Westlands Water District-Central	ESTIMATE TYPE: Feasibility
FEATURE: Drainage Feature Re-Evaluation Feasibility Study	PRICE LEVEL: April 2006

PROPERTY CLASS	IDENTIFIED PROPERTY	PLANT ACCOUNT	ITEM	DESCRIPTION	QUANTITY	UNIT	PRICE	AMOUNT	FIELD COST	TOTAL FIELD COST	NONCONTRACT COST	CONSTRUCTION COST
03	04			PUMPING PLANT G (continued)								
		154		Waterway Protective Works					76,000			
			1	Air Chamber; D=6 ft.; cylindrical shaped; 7,100 lbs	1	ea	50,000.00	50,000				
			2	Mobilization (+/- 5%)				2,500				
			3	Unlisted Items (+/- 15%)				7,875				
			4	Allowance for Procurement Strategies (+/- 5%)				2,625				
				Subtotal				63,000				
				Contingencies (+/- 20%)				13,000				
				Field Cost - Waterway Protective Works				76,000				
		160		Pumps and Prime Movers					220,000			
			1	Vertical Turbine Unit; 2-stg; 1770 rpm; Rated 405 gpm; TDH=70 ft.	2,480	lb	50.00	124,000				
				W/ vert Induction motor @ 10 hp; 1800 rpm; 3ph / 60 hz / 460 v								
			2	Flygt, 8" Std. CP-3152 submersible wastewater pump; 1750 rpm	800	lb	25.00	20,000				
				Q = 900 gpm; TDH = 42 ft.; w/ 20 hp submersible motor								
			3	Mobilization (+/- 5%)				7,200				
			4	Unlisted Items (+/- 15%)				22,680				
			5	Allowance for Procurement Strategies (+/- 5%)				11,120				
				Subtotal				185,000				
				Contingencies (+/- 20%)				35,000				
				Field Cost - Pumps and Prime Movers				220,000				

CONSTRUCTION COST ESTIMATE

PROJECT: Central Valley Project	PREPARED BY: Regional Office, Sacramento, CA
DIVISION: West San Joaquin Division	ESTIMATE DATE: July 2007 (Revised after DEC)
UNIT: San Luis Unit -- Drainage System -- Westlands Water District-Central	ESTIMATE TYPE: Feasibility
FEATURE: Drainage Feature Re-Evaluation Feasibility Study	PRICE LEVEL: April 2006

PROPERTY CLASS	IDENTIFIED PROPERTY	PLANT ACCOUNT	ITEM	DESCRIPTION	QUANTITY	UNIT	PRICE	AMOUNT	FIELD COST	TOTAL FIELD COST	NONCONTRACT COST	CONSTRUCTION COST
03	04			PUMPING PLANT G (continued)								
		170		Accessory Electrical Equipment					58,000			
			1	F&I PVC coated rigid steel conduit - 3/4 Inch	100	ft	15.00	1,500				
			2	F&I PVC coated rigid steel conduit - 2 Inch	50	ft	31.00	1,550				
			3	F&I single conductor - 12 AWG	400	ft	2.50	1,000				
			4	F&I single conductor - 1 AWG	200	ft	5.50	1,100				
			5	F&I grounding system - 4/0 bare copper	200	ft	12.00	2,400				
			6	F&I grounding system - 3/4" dia. 10 foot ground rod	8	ea	175.00	1,400				
			7	F&I Distribution Board w/ enclosure, trips, & A frames	1	ls	2,850.00	2,850				
			8	F&I transformer and load center, w/ enclosure, breakers, and	1	ea	4,000.00	4,000				
				7.5 KVA, single phase, 480V-240/120 V								
			9	F&I Control board for main pump, w/enclosure, relays, switches,	1	ls	10,000.00	10,000				
				fuse block, terminal block, & 10 hp motor starter								
			10	F&I Control board for submersible wastewater pump	1	ls	10,000.00	10,000				
			11	Furnish and install 100 A, 480V, 3 Phase meter socket	1	ea	500.00	500				
			12	Furnish and install 100 A, 600V, 3 Phase fused disconnect switch	1	ea	1,500.00	1,500				
			13	Mobilization (+/- 5%)				1,890				
			14	Unlisted Items (+/- 15%)				5,954				
			15	Allowance for Procurement Strategies (+/- 5%)				2,357				
				Subtotal				48,000				
				Contingencies (+/- 20%)				10,000				
				Field Cost - Accessory Electrical Equipment				58,000				

CONSTRUCTION COST ESTIMATE

PROJECT: Central Valley Project	PREPARED BY: Regional Office, Sacramento, CA
DIVISION: West San Joaquin Division	ESTIMATE DATE: July 2007 (Revised after DEC)
UNIT: San Luis Unit -- Drainage System -- Westlands Water District-Central	ESTIMATE TYPE: Feasibility
FEATURE: Drainage Feature Re-Evaluation Feasibility Study	PRICE LEVEL: April 2006

PROPERTY CLASS	IDENTIFIED PROPERTY	PLANT ACCOUNT	ITEM	DESCRIPTION	QUANTITY	UNIT	PRICE	AMOUNT	FIELD COST	TOTAL FIELD COST	NONCONTRACT COST	CONSTRUCTION COST
03	04			PUMPING PLANT G (continued)								
		175		Station Equipment					88,000			
			1	Oil filled, distribution power transformer, 45 kVA; 12.47kV-480V	1	ea	25,000.00	25,000				
			2	7.65-kV MCOV metal oxide distribution class arrester	3	ea	2,000.00	6,000				
			3	3-phase, 15-kV fused disconnect switch, 2E-5E	1	ea	25,000.00	25,000				
			4	50 foot wood pole for incoming line	1	ea	2,000.00	2,000				
			5	Mobilization (+/- 5%)				2,900				
			6	Unlisted Items (+/- 15%)				9,135				
			7	Allowance for Procurement Strategies (+/- 5%)				3,965				
				Subtotal				74,000				
				Contingencies (+/- 20%)				14,000				
				Field Cost - Station Equipment				88,000				
				FACILITATING SERVICES (2%)								
				INVESTIGATIONS (3%)								
				DESIGNS & SPECIFICATIONS (10%)								
				CONSTRUCTION SUPERVISION (12%)								
				OTHER COSTS (+/- 27%)							318,500	

CONSTRUCTION COST ESTIMATE

PROJECT: Central Valley Project	PREPARED BY: Regional Office, Sacramento, CA
DIVISION: West San Joaquin Division	ESTIMATE DATE: July 2007 (Revised after DEC)
UNIT: San Luis Unit -- Drainage System -- Westlands Water District-Central	ESTIMATE TYPE: Feasibility
FEATURE: Drainage Feature Re-Evaluation Feasibility Study	PRICE LEVEL: April 2006

PROPERTY CLASS	IDENTIFIED PROPERTY	PLANT ACCOUNT	ITEM	DESCRIPTION	QUANTITY	UNIT	PRICE	AMOUNT	FIELD COST	TOTAL FIELD COST	NONCONTRACT COST	CONSTRUCTION COST
03	05			PUMPING PLANT H - This pumping plant is located next to Reuse						1,298,000	352,000	1,650,000
				Area H. This plant is rated at 50 hp; Q = 557 GPM; TDH = 204 ft.								
		100		Land and Rights								
				Costs of Land and Rights have been included with Reuse Area H.								
		130		Structures and Improvements					620,000			
			1	Excavation, common	739	cy	15.00	11,085				
			2	Backfill, common	646	cy	10.00	6,460				
			3	Compacted backfill, common	646	cy	10.00	6,460				
			4	Excavation, braced trench	25	cy	500.00	12,500				
			5	Backfill, braced trench	20	cy	450.00	9,000				
			6	Compacted backfill, braced trench	20	cy	300.00	6,000				
			7	Gravel surfacing	78	cy	65.00	5,070				
			8	Unwatering/dewatering, 8' depth (2 month duration)	1	ls	250,000.00	250,000				
			9	Concrete	37	cy	1,000.00	37,000				
			10	Furnishing and handling cement	10	ton	170.00	1,700				
			11	Furnishing and placing reinforcement	5,220	lb	1.75	9,135				
			12	Chain link fencing	273	lf	30.00	8,190				
			13	CMU Wall (8' high, 15 lf long)	120	sf	100.00	12,000				
			14	Structural Steel - Sunshades (20' x 26'; 10,300 lbs)	1	ea	30,000.00	30,000				
			15	Mobilization (+/- 5%)				20,230				
			16	Unlisted Items (+/- 15%)				63,725				
			17	Allowance for Procurement Strategies (+/- 5%)				21,446				
				Subtotal				510,000				
				Contingencies (+/- 20%)				110,000				
				Field Cost - Structures and Improvements				620,000				

CONSTRUCTION COST ESTIMATE

PROJECT: Central Valley Project	PREPARED BY: Regional Office, Sacramento, CA
DIVISION: West San Joaquin Division	ESTIMATE DATE: July 2007 (Revised after DEC)
UNIT: San Luis Unit -- Drainage System -- Westlands Water District-Central	ESTIMATE TYPE: Feasibility
FEATURE: Drainage Feature Re-Evaluation Feasibility Study	PRICE LEVEL: April 2006

PROPERTY CLASS	IDENTIFIED PROPERTY	PLANT ACCOUNT	ITEM	DESCRIPTION	QUANTITY	UNIT	PRICE	AMOUNT	FIELD COST	TOTAL FIELD COST	NONCONTRACT COST	CONSTRUCTION COST
03	05			PUMPING PLANT H (continued)								
		152		Waterways					62,000			
			1	Steel piping & flanges for manifold	2,085	lb	6.00	12,510				
			2	Motor Op. BFV; Class 150; D=8"; 320 lb/valve	1	ea	18,750.00	18,750				
			3	Tilt Disk Ck. Valve; Class 125; D=8"; 265 lb/valve	1	ea	8,500.00	8,500				
			4	Ball Valve for AV; D=1"; 2 lbs/valve	2	ea	170.00	340				
			5	Air Valves; D=1"; 35 lbs/valve	2	ea	300.00	600				
			6	Mobilization (+/- 5%)				2,035				
			7	Unlisted Items (+/- 15%)				6,410				
			8	Allowance for Procurement Strategies (+/- 5%)				2,855				
				Subtotal				52,000				
				Contingencies (+/- 20%)				10,000				
				Field Cost - Waterways				62,000				
		153		Waterway Structures					15,000			
			1	Pipe Flowmeter; D = 10"	1	ea	10,000.00	10,000				
			2	Mobilization (+/- 5%)				500				
			3	Unlisted Items (+/- 15%)				1,575				
			4	Allowance for Procurement Strategies (+/- 5%)				425				
				Subtotal				12,500				
				Contingencies (+/- 20%)				2,500				
				Field Cost - Waterway Structures				15,000				

CONSTRUCTION COST ESTIMATE

PROJECT: Central Valley Project	PREPARED BY: Regional Office, Sacramento, CA
DIVISION: West San Joaquin Division	ESTIMATE DATE: July 2007 (Revised after DEC)
UNIT: San Luis Unit -- Drainage System -- Westlands Water District-Central	ESTIMATE TYPE: Feasibility
FEATURE: Drainage Feature Re-Evaluation Feasibility Study	PRICE LEVEL: April 2006

PROPERTY CLASS	IDENTIFIED PROPERTY	PLANT ACCOUNT	ITEM	DESCRIPTION	QUANTITY	UNIT	PRICE	AMOUNT	FIELD COST	TOTAL FIELD COST	NONCONTRACT COST	CONSTRUCTION COST
03	05			PUMPING PLANT H (continued)								
		154		Waterway Protective Works					76,000			
			1	Air Chamber; D=6 ft.; cylindrical shaped; 7,100 lbs	1	ea	50,000.00	50,000				
			2	Mobilization (+/- 5%)				2,500				
			3	Unlisted Items (+/- 15%)				7,875				
			4	Allowance for Procurement Strategies (+/- 5%)				2,625				
				Subtotal				63,000				
				Contingencies (+/- 20%)				13,000				
				Field Cost - Waterway Protective Works				76,000				
		160		Pumps and Prime Movers					290,000			
			1	Vertical Turbine Unit; 1-stg; 3550 rpm; Rated 557 gpm; TDH=204 ft.	3,130	lb	55.00	172,150				
				W/ vert Induction motor @ 50 hp; 3600 rpm; 3ph / 60 hz / 460 v								
			2	Flygt, 8" Std. CP-3152 submersible wastewater pump; 1750 rpm	800	lb	25.00	20,000				
				Q = 900 gpm; TDH = 42 ft.; w/ 20 hp submersible motor								
			3	Mobilization (+/- 5%)				9,608				
			4	Unlisted Items (+/- 15%)				30,264				
			5	Allowance for Procurement Strategies (+/- 5%)				7,979				
				Subtotal				240,000				
				Contingencies (+/- 20%)				50,000				
				Field Cost - Pumps and Prime Movers				290,000				

CONSTRUCTION COST ESTIMATE

PROJECT: Central Valley Project	PREPARED BY: Regional Office, Sacramento, CA
DIVISION: West San Joaquin Division	ESTIMATE DATE: July 2007 (Revised after DEC)
UNIT: San Luis Unit -- Drainage System -- Westlands Water District-Central	ESTIMATE TYPE: Feasibility
FEATURE: Drainage Feature Re-Evaluation Feasibility Study	PRICE LEVEL: April 2006

PROPERTY CLASS	IDENTIFIED PROPERTY	PLANT ACCOUNT	ITEM	DESCRIPTION	QUANTITY	UNIT	PRICE	AMOUNT	FIELD COST	TOTAL FIELD COST	NONCONTRACT COST	CONSTRUCTION COST
03	05			PUMPING PLANT H (continued)								
		170		Accessory Electrical Equipment					125,000			
			1	Furnish and install 200 A, 480V, 3 Phase meter socket	1	ea	500.00	500				
			2	Furnish and install 200 A, 600V, 3 Phase fused disconnect switch	1	ea	1,800.00	1,800				
			3	F&I PVC coated rigid steel conduit - 3/4 Inch	50	ft	15.00	750				
			4	F&I PVC coated rigid steel conduit - 2 Inch	100	ft	31.00	3,100				
			5	F&I single conductor - 12 AWG	200	ft	2.50	500				
			6	F&I single conductor - 4 AWG	200	ft	4.00	800				
			7	F&I single conductor - 4/0 AWG	200	ft	15.00	3,000				
			8	F&I grounding system - 4/0 bare copper	200	ft	12.00	2,400				
			9	F&I grounding system - 3/4" dia. 10 foot ground rod	8	ea	175.00	1,400				
			10	F&I transformer and load center, w/ enclosure, breakers, and	1	ea	4,000.00	4,000				
				7.5 KVA, single phase, 480V-240/120 V								
			11	F&I 600V - 600 amp bus MCC w/enclosure, relays, switches,	1	ls	55,000.00	55,000				
				fuse block, terminal block, & 50 hp motor starter								
			12	F&I Control board for submersible wastewater pump	1	ls	10,000.00	10,000				
			13	Mobilization (+/- 5%)				4,163				
			14	Unlisted Items (+/- 15%)				13,112				
			15	Allowance for Procurement Strategies (+/- 5%)				6,776				
				Subtotal				105,000				
				Contingencies (+/- 20%)				20,000				
				Field Cost - Accessory Electrical Equipment				125,000				

CONSTRUCTION COST ESTIMATE

PROJECT: Central Valley Project	PREPARED BY: Regional Office, Sacramento, CA
DIVISION: West San Joaquin Division	ESTIMATE DATE: July 2007 (Revised after DEC)
UNIT: San Luis Unit -- Drainage System -- Westlands Water District-Central	ESTIMATE TYPE: Feasibility
FEATURE: Drainage Feature Re-Evaluation Feasibility Study	PRICE LEVEL: April 2006

PROPERTY CLASS	IDENTIFIED PROPERTY	PLANT ACCOUNT	ITEM	DESCRIPTION	QUANTITY	UNIT	PRICE	AMOUNT	FIELD COST	TOTAL FIELD COST	NONCONTRACT COST	CONSTRUCTION COST
03	05			PUMPING PLANT H (continued)								
		175		Station Equipment					110,000			
			1	Oil filled, distribution power transformer, 112.5 kVA; 12.47kV-480V	1	ea	40,000.00	40,000				
			2	7.65-kV MCOV metal oxide distribution class arrester	3	ea	2,000.00	6,000				
			3	3-phase, 15-kV fused disconnect switch, 5E-10E	1	ea	25,000.00	25,000				
			4	50 foot wood pole for incoming line	1	ea	2,000.00	2,000				
			5	Mobilization (+/- 5%)				3,650				
			6	Unlisted Items (+/- 15%)				11,498				
			7	Allowance for Procurement Strategies (+/- 5%)				4,853				
				Subtotal				93,000				
				Contingencies (+/- 20%)				17,000				
				Field Cost - Station Equipment				110,000				
				FACILITATING SERVICES (2%)								
				INVESTIGATIONS (3%)								
				DESIGNS & SPECIFICATIONS (10%)								
				CONSTRUCTION SUPERVISION (12%)								
				OTHER COSTS (+/- 27%)							352,000	

CONSTRUCTION COST ESTIMATE

PROJECT: Central Valley Project	PREPARED BY: Regional Office, Sacramento, CA
DIVISION: West San Joaquin Division	ESTIMATE DATE: July 2007 (Revised after DEC)
UNIT: San Luis Unit -- Drainage System -- Westlands Water District-Central	ESTIMATE TYPE: Feasibility
FEATURE: Drainage Feature Re-Evaluation Feasibility Study	PRICE LEVEL: April 2006

PROPERTY CLASS	IDENTIFIED PROPERTY	PLANT ACCOUNT	ITEM	DESCRIPTION	QUANTITY	UNIT	PRICE	AMOUNT	FIELD COST	TOTAL FIELD COST	NONCONTRACT COST	CONSTRUCTION COST
07				DRAINS						127,210,000	34,290,000	161,500,000
	01			COLLECTION SYSTEM D -- This HDPE pipe collection system services						60,000,000	16,000,000	76,000,000
				approximately 21,320 acres of land; Total Length = 67.66 miles of pipe;								
				Pipe D range = 4" to 34". All pipes discharge to Reuse Area D.								
		100		Land and Rights					1,500,000			
			1	Permanent Easements	164	Ac	2,100.00	344,400				
			2	Temporary Easements	615	Ac	1,470.00	904,050				
			3	Unlisted Items (+/- 5%)				955,600				
				Subtotal				1,300,000				
				Contingencies (+/- 15%)				200,000				
				Field Cost - Land and Rights				1,500,000				
		152		Waterways					48,000,000			
			1	Excavation	730,000	cy	6.00	4,380,000				
			2	Backfill	730,000	cy	4.00	2,920,000				
			3	Compacting backfill	101,100	cy	10.50	1,061,550				
			4	Select fill (bedding)	6,330	cy	70.00	443,100				
			5	Excavation - Trench box	120,000	cy	20.00	2,400,000				
			6	Backfill - Trench box	120,000	cy	10.00	1,200,000				
			7	Compacting backfill - Trench box	71,600	cy	30.00	2,148,000				
			8	Select fill (bedding) - Trench box	4,480	cy	70.00	313,600				
			9	Unwatering	1	ls	2,800,000.00	2,800,000				
				Furnish and Lay the following HDPE Pipe								
			10	4 inch DR26	2,640	lf	10.50	27,720				
			11	5 inch DR26	39,600	lf	12.50	495,000				
			12	6 inch DR32.5	36,960	lf	13.50	498,960				
			13	7 inch DR32.5	7,920	lf	15.00	118,800				
			14	8 inch DR32.5	72,000	lf	18.50	1,332,000				
			15	10 inch DR32.5	44,900	lf	24.00	1,077,600				
			16	12 inch DR32.5	29,000	lf	35.00	1,015,000				
			17	14 inch DR32.5	10,600	lf	40.00	424,000				
			18	16 inch DR32.5	10,600	lf	50.00	530,000				

CONSTRUCTION COST ESTIMATE

PROJECT: Central Valley Project	PREPARED BY: Regional Office, Sacramento, CA
DIVISION: West San Joaquin Division	ESTIMATE DATE: July 2007 (Revised after DEC)
UNIT: San Luis Unit -- Drainage System -- Westlands Water District-Central	ESTIMATE TYPE: Feasibility
FEATURE: Drainage Feature Re-Evaluation Feasibility Study	PRICE LEVEL: April 2006

PROPERTY CLASS	IDENTIFIED PROPERTY	PLANT ACCOUNT	ITEM	DESCRIPTION	QUANTITY	UNIT	PRICE	AMOUNT	FIELD COST	TOTAL FIELD COST	NONCONTRACT COST	CONSTRUCTION COST
07	01			COLLECTION SYSTEM D (continued)								
		152		Waterways (continued)								
			19	18 inch DR32.5	18,480	lf	60.00	1,108,800				
			20	20 inch DR32.5	23,800	lf	70.00	1,666,000				
			21	22 inch DR32.5	10,600	lf	80.00	848,000				
			22	24 inch DR32.5	2,640	lf	95.00	250,800				
			23	26 inch DR32.5	29,000	lf	110.00	3,190,000				
			24	28 inch DR32.5	10,600	lf	120.00	1,272,000				
			25	34 inch DR32.5	7,920	lf	170.00	1,346,400				
			26	Mobilization (+/- 5%)				1,643,367				
			27	Unlisted Items (+/- 15%)				5,489,304				
				Subtotal				40,000,000				
				Contingencies (+/- 20%)				8,000,000				
				Field Cost - Waterways				48,000,000				
		153		Waterway Structures					10,500,000			
			1	Pipe Crossings, Roads: Pipe Dia 36" and less	73	ls	100,000.00	7,300,000				
			2	Mobilization (+/- 5%)				365,000				
			3	Unlisted Items (+/- 15%)				1,135,000				
				Subtotal				8,800,000				
				Contingencies (+/- 20%)				1,700,000				
				Field Cost - Waterway Structures				10,500,000				
				FACILITATING SERVICES (2%)								
				INVESTIGATIONS (3%)								
				DESIGNS & SPECIFICATIONS (10%)								
				CONSTRUCTION SUPERVISION (12%)								
				OTHER COSTS (+/- 27%)							16,000,000	

CONSTRUCTION COST ESTIMATE

PROJECT: Central Valley Project	PREPARED BY: Regional Office, Sacramento, CA
DIVISION: West San Joaquin Division	ESTIMATE DATE: July 2007 (Revised after DEC)
UNIT: San Luis Unit -- Drainage System -- Westlands Water District-Central	ESTIMATE TYPE: Feasibility
FEATURE: Drainage Feature Re-Evaluation Feasibility Study	PRICE LEVEL: April 2006

PROPERTY CLASS	IDENTIFIED PROPERTY	PLANT ACCOUNT	ITEM	DESCRIPTION	QUANTITY	UNIT	PRICE	AMOUNT	FIELD COST	TOTAL FIELD COST	NONCONTRACT COST	CONSTRUCTION COST
07	02			COLLECTION SYSTEM E -- This HDPE pipe collection system services						13,210,000	3,790,000	17,000,000
				approximately 8,650 acres of land; Total Length = 27.47 miles of pipe;								
				Pipe D range = 4" to 22". All pipes discharge to Reuse Area E.								
		100		Land and Rights					610,000			
			1	Permanent Easements	67	Ac	2,100.00	140,700				
			2	Temporary Easements	250	Ac	1,470.00	367,500				
			3	Unlisted Items (+/- 5%)				21,800				
				Subtotal				530,000				
				Contingencies (+/- 15%)				80,000				
				Field Cost - Land and Rights				610,000				
		152		Waterways					10,300,000			
			1	Excavation	355,000	cy	4.50	1,597,500				
			2	Backfill	355,000	cy	3.00	1,065,000				
			3	Compacting backfill	40,500	cy	8.50	344,250				
			4	Select fill (bedding)	1,670	cy	55.00	91,850				
			5	Excavation - Trench box	6,800	cy	15.00	102,000				
			6	Backfill - Trench box	6,500	cy	7.00	45,500				
			7	Compacting backfill - Trench box	3,970	cy	20.00	79,400				
			8	Select fill (bedding) - Trench box	160	cy	60.00	9,600				
			9	Unwatering	1	ls	850,000.00	850,000				
				Furnish and Lay the following HDPE Pipe								
			10	4 inch DR26	5,280	lf	8.50	44,880				
			11	5 inch DR26	29,000	lf	10.00	290,000				
			12	6 inch DR32.5	21,000	lf	11.00	231,000				
			13	7 inch DR32.5	2,640	lf	12.00	31,680				
			14	8 inch DR32.5	37,000	lf	14.50	536,500				
			15	10 inch DR32.5	21,100	lf	19.00	400,900				
			16	12 inch DR32.5	2,640	lf	29.00	76,560				
			17	14 inch DR32.5	2,640	lf	33.00	87,120				
			18	16 inch DR32.5	7,900	lf	40.00	316,000				

CONSTRUCTION COST ESTIMATE

PROJECT: Central Valley Project	PREPARED BY: Regional Office, Sacramento, CA
DIVISION: West San Joaquin Division	ESTIMATE DATE: July 2007 (Revised after DEC)
UNIT: San Luis Unit -- Drainage System -- Westlands Water District-Central	ESTIMATE TYPE: Feasibility
FEATURE: Drainage Feature Re-Evaluation Feasibility Study	PRICE LEVEL: April 2006

PROPERTY CLASS	IDENTIFIED PROPERTY	PLANT ACCOUNT	ITEM	DESCRIPTION	QUANTITY	UNIT	PRICE	AMOUNT	FIELD COST	TOTAL FIELD COST	NONCONTRACT COST	CONSTRUCTION COST
07	02			COLLECTION SYSTEM E (continued)								
		152		Waterways (continued)								
			19	18 inch DR32.5	2,640	lf	50.00	132,000				
			20	20 inch DR32.5	7,900	lf	55.00	434,500				
			21	22 inch DR32.5	5,280	lf	65.00	343,200				
			22	Mobilization (+/- 5%)				355,472				
			23	Unlisted Items (+/- 15%)				1,135,088				
				Subtotal				8,600,000				
				Contingencies (+/- 20%)				1,700,000				
				Field Cost - Waterways				10,300,000				
		153		Waterway Structures					2,300,000			
			1	Pipe Crossings, Roads: Pipe Dia 24" and less	27	ls	60,000.00	1,620,000				
			2	Mobilization (+/- 5%)				81,000				
			3	Unlisted Items (+/- 15%)				249,000				
				Subtotal				1,950,000				
				Contingencies (+/- 20%)				350,000				
				Field Cost - Waterway Structures				2,300,000				
				FACILITATING SERVICES (2%)								
				INVESTIGATIONS (3%)								
				DESIGNS & SPECIFICATIONS (10%)								
				CONSTRUCTION SUPERVISION (12%)								
				OTHER COSTS (+/- 27%)							3,790,000	

CONSTRUCTION COST ESTIMATE

PROJECT: Central Valley Project	PREPARED BY: Regional Office, Sacramento, CA
DIVISION: West San Joaquin Division	ESTIMATE DATE: July 2007 (Revised after DEC)
UNIT: San Luis Unit -- Drainage System -- Westlands Water District-Central	ESTIMATE TYPE: Feasibility
FEATURE: Drainage Feature Re-Evaluation Feasibility Study	PRICE LEVEL: April 2006

PROPERTY CLASS	IDENTIFIED PROPERTY	PLANT ACCOUNT	ITEM	DESCRIPTION	QUANTITY	UNIT	PRICE	AMOUNT	FIELD COST	TOTAL FIELD COST	NONCONTRACT COST	CONSTRUCTION COST
07	03			COLLECTION SYSTEM F -- This HDPE pipe collection system serivices						3,060,000	840,000	3,900,000
				approximately 2,400 acres of land; Total Length = 7.61 miles of pipe;								
				Pipe D range = 4" to 12". All pipes discharge to Reuse Area F.								
		100		Land and Rights					160,000			
			1	Permanent Easements	18	Ac	2,100.00	37,800				
			2	Temporary Easements	64	Ac	1,470.00	94,080				
			3	Unlisted Items (+/- 5%)				102,200				
				Subtotal				140,000				
				Contingencies (+/- 15%)				20,000				
				Field Cost - Land and Rights				160,000				
		152		Waterways					2,200,000			
			1	Excavation	80,600	cy	4.50	362,700				
			2	Backfill	79,700	cy	3.00	239,100				
			3	Compacting backfill	8,820	cy	8.50	74,970				
			4	Select fill (bedding)	110	cy	55.00	6,050				
			5	Excavation - Trench box	1,200	cy	15.00	18,000				
			6	Backfill - Trench box	1,200	cy	7.00	8,400				
			7	Compacting backfill - Trench box	700	cy	20.00	14,000				
			8	Select fill (bedding) - Trench box	10	cy	60.00	600				
			9	Unwatering	1	ls	200,000.00	200,000				
				Furnish and Lay the following HDPE Pipe								
			10	4 inch DR26	5,280	lf	8.50	44,880				
			11	5 inch DR26	5,280	lf	10.00	52,800				
			12	6 inch DR32.5	7,920	lf	11.00	87,120				
			13	7 inch DR32.5	2,640	lf	12.00	31,680				
			14	8 inch DR32.5	2,640	lf	14.50	38,280				
			15	10 inch DR32.5	13,800	lf	19.00	262,200				
			16	12 inch DR32.5	2,640	lf	29.00	76,560				

CONSTRUCTION COST ESTIMATE

PROJECT: Central Valley Project	PREPARED BY: Regional Office, Sacramento, CA
DIVISION: West San Joaquin Division	ESTIMATE DATE: July 2007 (Revised after DEC)
UNIT: San Luis Unit -- Drainage System -- Westlands Water District-Central	ESTIMATE TYPE: Feasibility
FEATURE: Drainage Feature Re-Evaluation Feasibility Study	PRICE LEVEL: April 2006

PROPERTY CLASS	IDENTIFIED PROPERTY	PLANT ACCOUNT	ITEM	DESCRIPTION	QUANTITY	UNIT	PRICE	AMOUNT	FIELD COST	TOTAL FIELD COST	NONCONTRACT COST	CONSTRUCTION COST
07	03			COLLECTION SYSTEM F (continued)								
		152		Waterways (continued)								
			17	Mobilization (+/- 5%)				75,867				
			18	Unlisted Items (+/- 15%)				256,793				
				Subtotal				1,850,000				
				Contingencies (+/- 20%)				350,000				
				Field Cost - Waterways				2,200,000				
		153		Waterway Structures					700,000			
			1	Pipe Crossings, Roads: Pipe Dia 24" and less	8	ls	60,000.00	480,000				
			2	Mobilization (+/- 5%)				24,000				
			3	Unlisted Items (+/- 15%)				76,000				
				Subtotal				580,000				
				Contingencies (+/- 20%)				120,000				
				Field Cost - Waterway Structures				700,000				
				FACILITATING SERVICES (2%)								
				INVESTIGATIONS (3%)								
				DESIGNS & SPECIFICATIONS (10%)								
				CONSTRUCTION SUPERVISION (12%)								
				OTHER COSTS (+/- 27%)							840,000	

CONSTRUCTION COST ESTIMATE

PROJECT: Central Valley Project	PREPARED BY: Regional Office, Sacramento, CA
DIVISION: West San Joaquin Division	ESTIMATE DATE: July 2007 (Revised after DEC)
UNIT: San Luis Unit -- Drainage System -- Westlands Water District-Central	ESTIMATE TYPE: Feasibility
FEATURE: Drainage Feature Re-Evaluation Feasibility Study	PRICE LEVEL: April 2006

PROPERTY CLASS	IDENTIFIED PROPERTY	PLANT ACCOUNT	ITEM	DESCRIPTION	QUANTITY	UNIT	PRICE	AMOUNT	FIELD COST	TOTAL FIELD COST	NONCONTRACT COST	CONSTRUCTION COST
07	04			COLLECTION SYSTEM G -- This HDPE pipe collection system serivices						14,470,000	4,030,000	18,500,000
				approximately 9,530 acres of land; Total Length = 30.24 miles of pipe;								
				Pipe D range = 4" to 22". All pipes discharge to Reuse Area G.								
		100		Land and Rights					670,000			
			1	Permanent Easements	73	Ac	2,100.00	153,300				
			2	Temporary Easements	275	Ac	1,470.00	404,250				
			3	Unlisted Items (+/- 5%)				32,450				
				Subtotal				590,000				
				Contingencies (+/- 15%)				80,000				
				Field Cost - Land and Rights				670,000				
		152		Waterways					11,000,000			
			1	Excavation	220,000	cy	4.50	990,000				
			2	Backfill	220,000	cy	3.00	660,000				
			3	Compacting backfill	20,900	cy	8.50	177,650				
			4	Select fill (bedding)	1,040	cy	55.00	57,200				
			5	Excavation - Trench box	49,000	cy	15.00	735,000				
			6	Backfill - Trench box	48,000	cy	7.00	336,000				
			7	Compacting backfill - Trench box	27,600	cy	20.00	552,000				
			8	Select fill (bedding) - Trench box	1,370	cy	60.00	82,200				
			9	Unwatering	1	ls	750,000.00	750,000				
				Furnish and Lay the following HDPE Pipe								
			10	4 inch DR26	13,200	lf	8.50	112,200				
			11	5 inch DR26	18,500	lf	10.00	185,000				
			12	6 inch DR32.5	18,500	lf	11.00	203,500				
			13	7 inch DR32.5	7,920	lf	12.00	95,040				
			14	8 inch DR32.5	23,800	lf	14.50	345,100				
			15	10 inch DR32.5	32,800	lf	19.00	623,200				
			16	12 inch DR32.5	18,500	lf	29.00	536,500				
			17	14 inch DR32.5	7,920	lf	33.00	261,360				
			18	16 inch DR32.5	10,600	lf	40.00	424,000				

CONSTRUCTION COST ESTIMATE

PROJECT: Central Valley Project	PREPARED BY: Regional Office, Sacramento, CA
DIVISION: West San Joaquin Division	ESTIMATE DATE: July 2007 (Revised after DEC)
UNIT: San Luis Unit -- Drainage System -- Westlands Water District-Central	ESTIMATE TYPE: Feasibility
FEATURE: Drainage Feature Re-Evaluation Feasibility Study	PRICE LEVEL: April 2006

PROPERTY CLASS	IDENTIFIED PROPERTY	PLANT ACCOUNT	ITEM	DESCRIPTION	QUANTITY	UNIT	PRICE	AMOUNT	FIELD COST	TOTAL FIELD COST	NONCONTRACT COST	CONSTRUCTION COST
07	04			COLLECTION SYSTEM G (continued)								
		152		Waterways (continued)								
			19	18 inch DR32.5	2,640	lf	50.00	132,000				
			20	20 inch DR32.5	2,640	lf	55.00	145,200				
			21	22 inch DR32.5	2,640	lf	65.00	171,600				
			22	Mobilization (+/- 5%)				378,738				
			23	Unlisted Items (+/- 15%)				1,146,513				
				Subtotal				9,100,000				
				Contingencies (+/- 20%)				1,900,000				
				Field Cost - Waterways				11,000,000				
		153		Waterway Structures					2,800,000			
			1	Pipe Crossings, Roads: Pipe Dia 24" and less	32	ls	60,000.00	1,920,000				
			2	Mobilization (+/- 5%)				96,000				
			3	Unlisted Items (+/- 15%)				284,000				
				Subtotal				2,300,000				
				Contingencies (+/- 20%)				500,000				
				Field Cost - Waterway Structures				2,800,000				
				FACILITATING SERVICES (2%)								
				INVESTIGATIONS (3%)								
				DESIGNS & SPECIFICATIONS (10%)								
				CONSTRUCTION SUPERVISION (12%)								
				OTHER COSTS (+/- 27%)							4,030,000	

CONSTRUCTION COST ESTIMATE

PROJECT: Central Valley Project	PREPARED BY: Regional Office, Sacramento, CA
DIVISION: West San Joaquin Division	ESTIMATE DATE: July 2007 (Revised after DEC)
UNIT: San Luis Unit -- Drainage System -- Westlands Water District-Central	ESTIMATE TYPE: Feasibility
FEATURE: Drainage Feature Re-Evaluation Feasibility Study	PRICE LEVEL: April 2006

PROPERTY CLASS	IDENTIFIED PROPERTY	PLANT ACCOUNT	ITEM	DESCRIPTION	QUANTITY	UNIT	PRICE	AMOUNT	FIELD COST	TOTAL FIELD COST	NONCONTRACT COST	CONSTRUCTION COST
07	05			COLLECTION SYSTEM H -- This HDPE pipe collection system serivices						23,770,000	6,230,000	30,000,000
				approximately 13,700 acres of land; Total Length = 43.50 miles of pipe;								
				Pipe D range = 4" to 22". All pipes discharge to Reuse Area H.								
		100		Land and Rights					970,000			
			1	Permanent Easements	105	Ac	2,100.00	220,500				
			2	Temporary Easements	395	Ac	1,470.00	580,650				
			3	Unlisted Items (+/- 5%)				38,850				
				Subtotal				840,000				
				Contingencies (+/- 15%)				130,000				
				Field Cost - Land and Rights				970,000				
		152		Waterways					18,500,000			
			1	Excavation	699,000	cy	4.50	3,145,500				
			2	Backfill	699,000	cy	3.00	2,097,000				
			3	Compacting backfill	61,700	cy	8.50	524,450				
			4	Select fill (bedding)	2,970	cy	55.00	163,350				
			5	Excavation - Trench box	15,500	cy	15.00	232,500				
			6	Backfill - Trench box	15,500	cy	7.00	108,500				
			7	Compacting backfill - Trench box	8,000	cy	20.00	160,000				
			8	Select fill (bedding) - Trench box	390	cy	60.00	23,400				
			9	Unwatering	1	ls	1,700,000.00	1,700,000				
				Furnish and Lay the following HDPE Pipe								
			10	4 inch DR26	7,920	lf	8.50	67,320				
			11	5 inch DR26	15,800	lf	10.00	158,000				
			12	6 inch DR32.5	34,300	lf	11.00	377,300				
			13	7 inch DR32.5	13,200	lf	12.00	158,400				
			14	8 inch DR32.5	50,200	lf	14.50	727,900				
			15	10 inch DR32.5	44,900	lf	19.00	853,100				
			16	12 inch DR32.5	23,800	lf	29.00	690,200				
			17	14 inch DR32.5	15,800	lf	33.00	521,400				
			18	16 inch DR32.5	13,200	lf	40.00	528,000				

CONSTRUCTION COST ESTIMATE

PROJECT: Central Valley Project	PREPARED BY: Regional Office, Sacramento, CA
DIVISION: West San Joaquin Division	ESTIMATE DATE: July 2007 (Revised after DEC)
UNIT: San Luis Unit -- Drainage System -- Westlands Water District-Central	ESTIMATE TYPE: Feasibility
FEATURE: Drainage Feature Re-Evaluation Feasibility Study	PRICE LEVEL: April 2006

PROPERTY CLASS	IDENTIFIED PROPERTY	PLANT ACCOUNT	ITEM	DESCRIPTION	QUANTITY	UNIT	PRICE	AMOUNT	FIELD COST	TOTAL FIELD COST	NONCONTRACT COST	CONSTRUCTION COST
07	05			COLLECTION SYSTEM H (continued)								
		152		Waterways (continued)								
			19	18 inch DR32.5	7,920	lf	50.00	396,000				
			20	22 inch DR32.5	2,640	lf	65.00	171,600				
			21	Mobilization (+/- 5%)				640,196				
			22	Unlisted Items (+/- 15%)				2,055,884				
				Subtotal				15,500,000				
				Contingencies (+/- 20%)				3,000,000				
				Field Cost - Waterways				18,500,000				
		153		Waterway Structures					4,300,000			
			1	Pipe Crossings, Roads: Pipe Dia 24" and less	49	ls	60,000.00	2,940,000				
			2	Mobilization (+/- 5%)				147,000				
			3	Unlisted Items (+/- 15%)				513,000				
				Subtotal				3,600,000				
				Contingencies (+/- 20%)				700,000				
				Field Cost - Waterway Structures				4,300,000				
				FACILITATING SERVICES (2%)								
				INVESTIGATIONS (3%)								
				DESIGNS & SPECIFICATIONS (10%)								
				CONSTRUCTION SUPERVISION (12%)								
				OTHER COSTS (+/- 27%)							6,230,000	

CONSTRUCTION COST ESTIMATE

PROJECT: Central Valley Project	PREPARED BY: Regional Office, Sacramento, CA
DIVISION: West San Joaquin Division	ESTIMATE DATE: July 2007 (Revised after DEC)
UNIT: San Luis Unit -- Drainage System -- Westlands Water District-Central	ESTIMATE TYPE: Feasibility
FEATURE: Drainage Feature Re-Evaluation Feasibility Study	PRICE LEVEL: April 2006

PROPERTY CLASS	IDENTIFIED PROPERTY	PLANT ACCOUNT	ITEM	DESCRIPTION	QUANTITY	UNIT	PRICE	AMOUNT	FIELD COST	TOTAL FIELD COST	NONCONTRACT COST	CONSTRUCTION COST
07	06			CENTRAL DRAINAGE CONVEYANCE SYSTEM 1 -- These HDPE pipes						5,050,000	1,350,000	6,400,000
				take drain water from Reuse Areas D, E, F, G, and H to the regulating tank at								
				the treatment facility. Total Length = 11.05 miles. Pipe D = 7" and 12"								
		100		Land and Rights					250,000			
			1	Permanent Easements	27	Ac	2,100.00	56,700				
			2	Temporary Easements	101	Ac	1,470.00	148,470				
			3	Unlisted Items (+/- 5%)				14,830				
				Subtotal				220,000				
				Contingencies (+/- 15%)				30,000				
				Field Cost - Land and Rights				250,000				
		152		Waterways					4,100,000			
			1	Excavation	15,600	cy	4.50	70,200				
			2	Backfill	15,000	cy	3.00	45,000				
			3	Compacting backfill	14,430	cy	8.50	122,655				
			4	Select fill (bedding)	1,480	cy	55.00	81,400				
			5	Excavation - Trench box	28,000	cy	15.00	420,000				
			6	Backfill - Trench box	27,000	cy	7.00	189,000				
			7	Compacting backfill - Trench box	5,370	cy	20.00	107,400				
			8	Select fill (bedding) - Trench box	550	cy	60.00	33,000				
			9	Unwatering	1	ls	150,000.00	150,000				
				Furnish and Lay the following HDPE Pipe								
			10	7 inch DR 26	13,600	lf	13.00	176,800				
			11	12 inch DR 26	44,770	lf	32.00	1,432,640				
			12	Mobilization (+/- 5%)				141,405				
			13	Unlisted Items (+/- 15%)				430,500				
				Subtotal				3,400,000				
				Contingencies (+/- 20%)				700,000				
				Field Cost - Waterways				4,100,000				

CONSTRUCTION COST ESTIMATE

PROJECT: Central Valley Project	PREPARED BY: Regional Office, Sacramento, CA
DIVISION: West San Joaquin Division	ESTIMATE DATE: July 2007 (Revised after DEC)
UNIT: San Luis Unit -- Drainage System -- Westlands Water District-Central	ESTIMATE TYPE: Feasibility
FEATURE: Drainage Feature Re-Evaluation Feasibility Study	PRICE LEVEL: April 2006

PROPERTY CLASS	IDENTIFIED PROPERTY	PLANT ACCOUNT	ITEM	DESCRIPTION	QUANTITY	UNIT	PRICE	AMOUNT	FIELD COST	TOTAL FIELD COST	NONCONTRACT COST	CONSTRUCTION COST
07	06			CENTRAL DRAINAGE CONVEYANCE SYSTEM 1 (continued)								
		153		Waterway Structures					700,000			
			1	Pipe Crossings, Roads: Pipe Dia 24" and less	8	ls	60,000.00	480,000				
			2	Mobilization (+/- 5%)				24,000				
			3	Unlisted Items (+/- 15%)				76,000				
				Subtotal				580,000				
				Contingencies (+/- 20%)				120,000				
				Field Cost - Waterway Structures				700,000				
				FACILITATING SERVICES (2%)								
				INVESTIGATIONS (3%)								
				DESIGNS & SPECIFICATIONS (10%)								
				CONSTRUCTION SUPERVISION (12%)								
				OTHER COSTS (+/- 27%)							1,350,000	

CONSTRUCTION COST ESTIMATE

PROJECT: Central Valley Project	PREPARED BY: Regional Office, Sacramento, CA
DIVISION: West San Joaquin Division	ESTIMATE DATE: July 2007 (Revised after DEC)
UNIT: San Luis Unit -- Drainage System -- Westlands Water District-Central	ESTIMATE TYPE: Feasibility
FEATURE: Drainage Feature Re-Evaluation Feasibility Study	PRICE LEVEL: April 2006

PROPERTY CLASS	IDENTIFIED PROPERTY	PLANT ACCOUNT	ITEM	DESCRIPTION	QUANTITY	UNIT	PRICE	AMOUNT	FIELD COST	TOTAL FIELD COST	NONCONTRACT COST	CONSTRUCTION COST
07	07			CENTRAL DRAINAGE CONVEYANCE SYSTEM 2 -- These HDPE pipes						7,650,000	2,050,000	9,700,000
				take drain water from Reuse Areas D, E, F, G, and H to the regulating tank at								
				the treatment facility. Total Length = 18.42 miles. Pipe D = 7", 8", and 10"								
		100		Land and Rights					500,000			
			1	Permanent Easements	45	Ac	2,100.00	94,500				
			2	Temporary Easements	168	Ac	1,470.00	246,960				
			3	Unlisted Items (+/- 5%)				98,540				
				Subtotal				440,000				
				Contingencies (+/- 15%)				60,000				
				Field Cost - Land and Rights				500,000				
		152		Waterways					5,600,000			
			1	Excavation	64,100	cy	4.50	288,450				
			2	Backfill	63,200	cy	3.00	189,600				
			3	Compacting backfill	14,940	cy	8.50	126,990				
			4	Excavation - Trench box	29,000	cy	15.00	435,000				
			5	Backfill - Trench box	28,000	cy	7.00	196,000				
			6	Compacting backfill - Trench box	11,470	cy	20.00	229,400				
			7	Unwatering	1	ls	300,000.00	300,000				
				Furnish and Lay the following HDPE Pipe								
			8	7 inch DR 26	5,280	lf	13.00	68,640				
			9	8 inch DR 26	34,590	lf	16.50	570,735				
			10	10 inch DR 26	57,400	lf	25.00	1,435,000				
			11	Mobilization (+/- 5%)				191,991				
			12	Unlisted Items (+/- 15%)				568,194				
					97,270							
				Subtotal				4,600,000				
				Contingencies (+/- 20%)				1,000,000				
				Field Cost - Waterways				5,600,000				

CONSTRUCTION COST ESTIMATE

PROJECT: Central Valley Project	PREPARED BY: Regional Office, Sacramento, CA
DIVISION: West San Joaquin Division	ESTIMATE DATE: July 2007 (Revised after DEC)
UNIT: San Luis Unit -- Drainage System -- Westlands Water District-Central	ESTIMATE TYPE: Feasibility
FEATURE: Drainage Feature Re-Evaluation Feasibility Study	PRICE LEVEL: April 2006

PROPERTY CLASS	IDENTIFIED PROPERTY	PLANT ACCOUNT	ITEM	DESCRIPTION	QUANTITY	UNIT	PRICE	AMOUNT	FIELD COST	TOTAL FIELD COST	NONCONTRACT COST	CONSTRUCTION COST
07	07			CENTRAL DRAINAGE CONVEYANCE SYSTEM 2 (continued)								
		153		Waterway Structures					1,550,000			
			1	Pipe Crossings, Roads: Pipe Dia 24" and less	18	ls	60,000.00	1,080,000				
			2	Mobilization (+/- 5%)				54,000				
			3	Unlisted Items (+/- 15%)				166,000				
				Subtotal				1,300,000				
				Contingencies (+/- 20%)				250,000				
				Field Cost - Waterway Structures				1,550,000				
				FACILITATING SERVICES (2%)								
				INVESTIGATIONS (3%)								
				DESIGNS & SPECIFICATIONS (10%)								
				CONSTRUCTION SUPERVISION (12%)								
				OTHER COSTS (+/- 27%)							2,050,000	

CONSTRUCTION COST ESTIMATE

PROJECT: Central Valley Project	PREPARED BY: Regional Office, Sacramento, CA
DIVISION: West San Joaquin Division	ESTIMATE DATE: July 2007 (Revised after DEC)
UNIT: San Luis Unit -- Drainage System -- Westlands Water District-Central	ESTIMATE TYPE: Feasibility
FEATURE: Drainage Feature Re-Evaluation Feasibility Study	PRICE LEVEL: April 2006

PROPERTY CLASS	IDENTIFIED PROPERTY	PLANT ACCOUNT	ITEM	DESCRIPTION	QUANTITY	UNIT	PRICE	AMOUNT	FIELD COST	TOTAL FIELD COST	NONCONTRACT COST	CONSTRUCTION COST
12				SPECIAL PLANTS						236,852,000	62,148,000	299,000,000
	01			WWD CENTRAL - REUSE AREAS -- Three Reuse Areas (D, E, F, G, and H)						39,800,000	11,200,000	51,000,000
				total 2,560 acres in size. Conveyance pipelines distribute drain water								
				over a reuse area and on-farm drain pipes collect drain water for delivery								
				to the reuse area pumping plants.								
		100		Land and Rights					12,500,000			
			1	Undeveloped Land - Fee	125	Ac	2,100.00	262,500				
			1	Seasonal Crop Land - Fee	2,425	Ac	4,000.00	9,700,000				
			1	Mixed Built Land - Fee	10	Ac	15,500.00	155,000				
			2	Unlisted Items (+/- 5%)				382,500				
					2,560							
				Subtotal				10,500,000				
				Contingencies (+/- 15%)				2,000,000				
				Field Cost - Land and Rights				12,500,000				
		152		Waterways					27,300,000			
				(1) Land Development					5,800,000			
			1	Land Smoothing and Re- Leveling	2,560	Ac	$500.00	1,280,000				
			2	Establish Initial Forage Crops; Seeding and Drilling	2,560	Ac	$1,000.00	2,560,000				
			3	Surface Drainage Ditch at field ends; (cutting a "v" notch with a blade)	78,930	lf	$2.00	157,860				
			4	Mobilization (+/- 5%)				199,893				
			5	Unlisted Items (+/- 15%)				602,247				
				Subtotal				4,800,000				
				Contingencies (+/- 20%)				1,000,000				
				Field Cost - (1) Land Development				5,800,000				

CONSTRUCTION COST ESTIMATE

PROJECT: Central Valley Project	PREPARED BY: Regional Office, Sacramento, CA
DIVISION: West San Joaquin Division	ESTIMATE DATE: July 2007 (Revised after DEC)
UNIT: San Luis Unit -- Drainage System -- Westlands Water District-Central	ESTIMATE TYPE: Feasibility
FEATURE: Drainage Feature Re-Evaluation Feasibility Study	PRICE LEVEL: April 2006

PROPERTY CLASS	IDENTIFIED PROPERTY	PLANT ACCOUNT	ITEM	DESCRIPTION	QUANTITY	UNIT	PRICE	AMOUNT	FIELD COST	TOTAL FIELD COST	NONCONTRACT COST	CONSTRUCTION COST
12	01			WWD CENTRAL - REUSE AREAS (continued)								
		152		Waterways (continued)								
				(2) Pipelines					8,000,000			
			1	6" dia. Alum gated pipe; 36" gate spacing (recess gates)	12,150	lf	$21.00	255,150				
			2	8" dia. Alum gated pipe; 36" gate spacing (recess gates)	5,080	lf	$24.00	121,920				
			3	10" dia. Alum gated pipe; 36" gate spacing (recess gates)	17,910	lf	$25.00	447,750				
			4	12" dia. Alum gated pipe; 36" gate spacing (recess gates)	20,360	lf	$33.00	671,880				
			5	8-inch dia. Aluminum; non-gated pipe	1,320	lf	$23.00	30,360				
			6	10-inch dia. Aluminum; non-gated pipe	3,960	lf	$24.00	95,040				
			7	12-inch dia. Aluminum; non-gated pipe	2,640	lf	$32.00	84,480				
				Polyethylene Riser Pipe and Gate Valve (assume DR32.5, 10 lf/ea min)								
			8	6-inch dia.	3	ea	$1,610.00	4,830				
			9	8-inch dia.	2	ea	$2,145.00	4,290				
			10	10-inch dia.	13	ea	$2,690.00	34,970				
			11	12-inch dia.	17	ea	$3,790.00	64,430				
			12	14-inch dia.	2	ea	$4,330.00	8,660				
				Buried Pipelines								
			13	10SDR32.5 HDPE pipe, F&I	10,015	lf	$19.00	190,285				
			14	12SDR32.5 HDPE pipe, F&I	17,935	lf	$29.00	520,115				
			15	14SDR32.5 HDPE pipe, F&I	2,095	lf	$33.00	69,135				
			16	16SDR32.5 HDPE pipe, F&I	2,640	lf	$40.00	105,600				
				Earthwork for Buried Pipelines (2:1 Slopes)								
			17	Excavation	105,000	cy	$4.50	472,500				
			18	Backfill	100,000	cy	$3.00	300,000				
			19	Select Fill; Bedding	1,255	cy	$55.00	69,025				
			20	Compacting Backfill	3,620	cy	$8.50	30,770				
				Tail Water Collection and Recycling								
			21	10SDR26 HDPE pipe, F&I	34,320	lf	$22.00	755,040				
			22	Excavation	118,540	cy	$4.50	533,430				
			23	Backfill	114,120	cy	$3.00	342,360				
			24	Compacting Backfill (85% proctor)	1,346	cy	$8.50	11,441				
			25	Select Fill; bedding	3,200	cy	$55.00	176,000				
				Valves / Fittings								
			26	Riser Pipe; 10SDR26 HDPE x 7 ft (assume 10' minimum)	10	ea	$220.00	2,200				
			27	10 inch check valve (20 psi)	10	ea	$15,000.00	150,000				

CONSTRUCTION COST ESTIMATE

PROJECT: Central Valley Project	PREPARED BY: Regional Office, Sacramento, CA
DIVISION: West San Joaquin Division	ESTIMATE DATE: July 2007 (Revised after DEC)
UNIT: San Luis Unit -- Drainage System -- Westlands Water District-Central	ESTIMATE TYPE: Feasibility
FEATURE: Drainage Feature Re-Evaluation Feasibility Study	PRICE LEVEL: April 2006

PROPERTY CLASS	IDENTIFIED PROPERTY	PLANT ACCOUNT	ITEM	DESCRIPTION	QUANTITY	UNIT	PRICE	AMOUNT	FIELD COST	TOTAL FIELD COST	NONCONTRACT COST	CONSTRUCTION COST
12	01			WWD CENTRAL - REUSE AREAS (continued)								
		152		Waterways (continued)								
				(2) Pipelines (continued)								
			28	Mobilization (+/- 5%)				277,583				
			29	Unlisted Items (+/- 15%)				870,756				
				Subtotal				6,700,000				
				Contingencies (+/- 20%)				1,300,000				
				Field Cost - (2) Pipelines				8,000,000				
				(3) Reuse Area Tile Drains					13,500,000			
				Spaced Drains								
			1	Concrete Manholes, 48"x 14 ft	423	ea	$14,000.00	5,922,000				
			2	6-inch dia. tile drain, w/gravel envelope	380,000	lf	$5.00	1,900,000				
				Collector Drains								
			3	8-inch dia. tile drain, w/gravel envelope	19,880	lf	$6.00	119,280				
			4	10-inch dia. tile drain, w/gravel envelope	16,600	lf	$9.50	157,700				
			5	12-inch dia. tile drain, w/gravel envelope	8,456	lf	$10.50	88,788				
			6	15-inch dia. tile drain, w/gravel envelope	2,640	lf	$14.50	38,280				
			7	DOS-IR or Inline Water Level Control Valves, 8" x 14 ft	141	ea	$2,600.00	366,600				
			8	DOS-IR or Inline Water Level Control Valves, 6" x 14 ft	141	ea	$1,600.00	225,600				
			9	Drain ROW Shaping & Surface Repairs	980	Ac	$500.00	490,000				

CONSTRUCTION COST ESTIMATE

PROJECT: Central Valley Project	PREPARED BY: Regional Office, Sacramento, CA
DIVISION: West San Joaquin Division	ESTIMATE DATE: July 2007 (Revised after DEC)
UNIT: San Luis Unit -- Drainage System -- Westlands Water District-Central	ESTIMATE TYPE: Feasibility
FEATURE: Drainage Feature Re-Evaluation Feasibility Study	PRICE LEVEL: April 2006

PROPERTY CLASS	IDENTIFIED PROPERTY	PLANT ACCOUNT	ITEM	DESCRIPTION	QUANTITY	UNIT	PRICE	AMOUNT	FIELD COST	TOTAL FIELD COST	NONCONTRACT COST	CONSTRUCTION COST
12	01			WWD CENTRAL - REUSE AREAS (continued)								
		152		Waterways (continued)								
				(3) Reuse Area Tile Drains (continued)								
			10	Mobilization (+/- 5%)				465,412				
			11	Unlisted Items (+/- 15%)				1,226,340				
				Subtotal				11,000,000				
				Contingencies (+/- 20%)				2,500,000				
				Field Cost - (3) Reuse Area Tile Drains				13,500,000				
				Field Cost - Waterways				27,300,000				
				FACILITATING SERVICES (2%)								
				INVESTIGATIONS (3%)								
				DESIGNS & SPECIFICATIONS (10%)								
				CONSTRUCTION SUPERVISION (12%)								
				OTHER COSTS (+/- 27%)							11,200,000	

CONSTRUCTION COST ESTIMATE

PROJECT: Central Valley Project	PREPARED BY: Regional Office, Sacramento, CA
DIVISION: West San Joaquin Division	ESTIMATE DATE: July 2007 (Revised after DEC)
UNIT: San Luis Unit -- Drainage System -- Westlands Water District-Central	ESTIMATE TYPE: Feasibility
FEATURE: Drainage Feature Re-Evaluation Feasibility Study	PRICE LEVEL: April 2006

PROPERTY CLASS	IDENTIFIED PROPERTY	PLANT ACCOUNT	ITEM	DESCRIPTION	QUANTITY	UNIT	PRICE	AMOUNT	FIELD COST	TOTAL FIELD COST	NONCONTRACT COST	CONSTRUCTION COST
12	02			RO TREATMENT PLANT - This treatment plant handles the water from						10,085,000	2,915,000	13,000,000
				Areas D, E, F, G, and H. Several treatment processes are utilized.								
		100		Land and Rights					15,000			
			1	Seasonal Crop Land - Fee	3	Ac	4,000.00	12,000				
			2	Unlisted Items (+/- 5%)				1,000				
				Subtotal				13,000				
				Contingencies (+/- 15%)				2,000				
				Field Cost - Land and Rights				15,000				
		130		Structures and Improvements					6,000,000			
			1	Concrete Pad for Pretreatment System	37	cy	1,350.00	49,950				
			2	Site Work	1	ls	84,400.00	84,400				
			4	Building	8,383	sf	250.00	2,095,750				
			5	Rapid Mix Tank	1	ls	28,400.00	28,400				
			6	Flocculation	1	ls	149,000.00	149,000				
			8	Filtration	1	ls	1,021,700.00	1,021,700				
			9	Location Factor for Fresno, CA (+/- 7.1% of items 2-8)				239,927				
			10	Mobilization (+/- 5%)				183,456				
			11	Unlisted Items (+/- 15%)				577,887				
			12	Allowance for Procurement Strategy (+/- 5%)				269,529				
				Subtotal				4,700,000				
				Contingencies (+/- 30%)				1,300,000				
				Field Cost - Structures and Improvements				6,000,000				

CONSTRUCTION COST ESTIMATE

PROJECT: Central Valley Project	PREPARED BY: Regional Office, Sacramento, CA
DIVISION: West San Joaquin Division	ESTIMATE DATE: July 2007 (Revised after DEC)
UNIT: San Luis Unit -- Drainage System -- Westlands Water District-Central	ESTIMATE TYPE: Feasibility
FEATURE: Drainage Feature Re-Evaluation Feasibility Study	PRICE LEVEL: April 2006

PROPERTY CLASS	IDENTIFIED PROPERTY	PLANT ACCOUNT	ITEM	DESCRIPTION	QUANTITY	UNIT	PRICE	AMOUNT	FIELD COST	TOTAL FIELD COST	NONCONTRACT COST	CONSTRUCTION COST
12	02			RO TREATMENT PLANT (continued)								
		152		Waterways					2,100,000			
			1	Ferric Chloride Feed System	1	ls	124,600.00	124,600				
			2	Polyelectrolyte Feed System	1	ls	54,000.00	54,000				
			3	Antiscalant Feed System	1	ls	68,700.00	68,700				
			4	Membrane Elements	228	ea	750.00	171,000				
			5	Membrane Vessels/Trains	1	ls	251,500.00	251,500				
			6	Cartridge Filters	1	ls	37,200.00	37,200				
			7	Membrane Cleaning Equipment	1	ls	94,500.00	94,500				
			8	Contractor Engineering & Training	1	ls	125,800.00	125,800				
			9	Process Piping	1	ls	155,900.00	155,900				
			10	Yard Piping	1	ls	113,400.00	113,400				
			11	Location Factor for Fresno, CA (+/- 7.1% of above)				84,959				
			12	Mobilization (+/- 5%)				64,078				
			13	Unlisted Items (+/- 15%)				201,845				
			14	Allowance for Procurement Strategy (+/- 5%)				52,518				
				Subtotal				1,600,000				
				Contingencies (+/- 30%)				500,000				
				Field Cost - Waterways				2,100,000				

CONSTRUCTION COST ESTIMATE

PROJECT: Central Valley Project	PREPARED BY: Regional Office, Sacramento, CA
DIVISION: West San Joaquin Division	ESTIMATE DATE: July 2007 (Revised after DEC)
UNIT: San Luis Unit -- Drainage System -- Westlands Water District-Central	ESTIMATE TYPE: Feasibility
FEATURE: Drainage Feature Re-Evaluation Feasibility Study	PRICE LEVEL: April 2006

PROPERTY CLASS	IDENTIFIED PROPERTY	PLANT ACCOUNT	ITEM	DESCRIPTION	QUANTITY	UNIT	PRICE	AMOUNT	FIELD COST	TOTAL FIELD COST	NONCONTRACT COST	CONSTRUCTION COST
12	02			RO TREATMENT PLANT (continued)								
		160		Pumps and Prime Movers					730,000			
			1	Forwarding & High Pressure Pumps	1	ls	414,000.00	414,000				
			2	Location Factor for Fresno, CA (+/- 7.1% of above)				29,394				
			3	Mobilization (+/- 5%)				22,170				
			4	Unlisted Items (+/- 15%)				69,835				
			5	Allowance for Procurement Strategy (+/- 5%)				24,602				
				Subtotal				560,000				
				Contingencies (+/- 30%)				170,000				
				Field Cost - Pumps and Prime Movers				730,000				
		170		Accessory Electrical Equipment					590,000			
			1	Electrical Cost	1	ls	331,900.00	331,900				
			2	Location Factor for Fresno, CA (+/- 7.1% of above)				23,565				
			3	Mobilization (+/- 5%)				17,773				
			4	Unlisted Items (+/- 15%)				55,986				
			5	Allowance for Procurement Strategy (+/- 5%)				20,776				
				Subtotal				450,000				
				Contingencies (+/- 30%)				140,000				
				Field Cost - Accessory Electrical Equipment				590,000				

CONSTRUCTION COST ESTIMATE

PROJECT: Central Valley Project	PREPARED BY: Regional Office, Sacramento, CA
DIVISION: West San Joaquin Division	ESTIMATE DATE: July 2007 (Revised after DEC)
UNIT: San Luis Unit -- Drainage System -- Westlands Water District-Central	ESTIMATE TYPE: Feasibility
FEATURE: Drainage Feature Re-Evaluation Feasibility Study	PRICE LEVEL: April 2006

PROPERTY CLASS	IDENTIFIED PROPERTY	PLANT ACCOUNT	ITEM	DESCRIPTION	QUANTITY	UNIT	PRICE	AMOUNT	FIELD COST	TOTAL FIELD COST	NONCONTRACT COST	CONSTRUCTION COST
12	02			RO TREATMENT PLANT (continued)								
		180		Installed Supervisory Control System					650,000			
			1	Instrumentation and Controls	1	ls	366,600.00	366,600				
			2	Location Factor for Fresno, CA (+/- 7% of above)				26,029				
			3	Mobilization (+/- 5%)				19,631				
			4	Unlisted Items (+/- 15%)				61,839				
			5	Allowance for Procurement Strategy (+/- 5%)				25,901				
				Subtotal				500,000				
				Contingencies (+/- 30%)				150,000				
				Field Cost - Installed Supervisory Control System				650,000				
				FACILITATING SERVICES (2%)								
				INVESTIGATIONS (3%)								
				DESIGNS & SPECIFICATIONS (10%)								
				CONSTRUCTION SUPERVISION (12%)								
				OTHER COSTS (+/- 27%)							2,915,000	

CONSTRUCTION COST ESTIMATE

PROJECT: Central Valley Project	PREPARED BY: Regional Office, Sacramento, CA
DIVISION: West San Joaquin Division	ESTIMATE DATE: July 2007 (Revised after DEC)
UNIT: San Luis Unit -- Drainage System -- Westlands Water District-Central	ESTIMATE TYPE: Feasibility
FEATURE: Drainage Feature Re-Evaluation Feasibility Study	PRICE LEVEL: April 2006

PROPERTY CLASS	IDENTIFIED PROPERTY	PLANT ACCOUNT	ITEM	DESCRIPTION	QUANTITY	UNIT	PRICE	AMOUNT	FIELD COST	TOTAL FIELD COST	NONCONTRACT COST	CONSTRUCTION COST
12	03			WWD CENTRAL Se BIOTREATMENT PLANT - The system is designed						31,175,000	8,825,000	40,000,000
				to handle 844 gpm. It serves Areas D, E, F, G, and H.								
		100		Land and Rights					15,000			
			1	Seasonal Crop Land - Fee	3	Ac	4,000.00	12,000				
			2	Unlisted Items (+/- 5%)				1,000				
				Subtotal				13,000				
				Contingencies (+/- 15%)				2,000				
				Field Cost - Land and Rights				15,000				
		130		Structures and Improvements					17,830,000			
				(1) General Site Work					1,200,000			
			1	Paving	1,400	sy	60.00	84,000				
			2	Seeding	22,000	sy	2.00	44,000				
			3	Sod	4	msf	2,400.00	9,600				
				Security								
			4	Perimeter Fence, 8' Chain Link	1,220	lf	40.00	48,800				
			5	Double Swing Gate, 8'x20'	2	ea	9,000.00	18,000				
			6	Camera and Monitor	1	ea	8,500.00	8,500				
			7	Additional Cameras	3	ea	5,000.00	15,000				
			8	Auto Light Features on Cameras	4	ea	6,500.00	26,000				
			9	Yard Lighting, on dual switches (light/motion and manual) on posts	12	ea	3,500.00	42,000				
				Earthwork, main structures 3' deep in-ground								
			10	Site clearing and grubbing	2	acre	6,000.00	12,000				
			11	Excavation, all except bioreactors and piping gallery	1,345	cy	12.00	16,140				
			12	Excavation, bioreactors and piping gallery	1,445	cy	12.00	17,340				
			13	Offsite disposal of waste material	2,800	cy	35.00	98,000				
				Dewatering for Clarifier Waffle Bottom Slab, 3' Dewatering								
			14	Gas Powered Pump, 4 Months Rental and Operation	122	day	2,500.00	305,000				
			15	12 Well Points, 2" Steel Pipe driven 20 feet deep	240	lf	45.00	10,800				
			16	Suction Piping, 3" Plastic	150	lf	35.00	5,250				
			17	Discharge Piping, 4" Plastic	150	lf	60.00	9,000				

CONSTRUCTION COST ESTIMATE

PROJECT: Central Valley Project	PREPARED BY: Regional Office, Sacramento, CA
DIVISION: West San Joaquin Division	ESTIMATE DATE: July 2007 (Revised after DEC)
UNIT: San Luis Unit -- Drainage System -- Westlands Water District-Central	ESTIMATE TYPE: Feasibility
FEATURE: Drainage Feature Re-Evaluation Feasibility Study	PRICE LEVEL: April 2006

PROPERTY CLASS	IDENTIFIED PROPERTY	PLANT ACCOUNT	ITEM	DESCRIPTION	QUANTITY	UNIT	PRICE	AMOUNT	FIELD COST	TOTAL FIELD COST	NONCONTRACT COST	CONSTRUCTION COST
12	03			WWD CENTRAL Se BIOTREATMENT PLANT (continued)								
		130		Structures and Improvements (continued)								
				(1) General Site Work (continued)								
			18	Mobilization (+/- 5%)				38,472				
			19	Unlisted Items (+/- 15%)				121,185				
			20	Allowance for Procurement Strategy (+/- 5%)				50,913				
				Subtotal				980,000				
				Contingencies (+/- 25%)				220,000				
				Field Cost - (1) General Site Work				1,200,000				
				(2) Administration Building					1,250,000			
			1	Geotextile Fabric to Separate Native and Structural Fill	2,926	sf	0.50	1,463				
			2	Structural Fill Below Structures (imported material)	55	cy	60.00	3,300				
			3	Foundation	45	cy	700.00	31,500				
			4	Slab on grade	70	cy	600.00	42,000				
			5	Metal Bldg 14' eave, 40' span	2,480	sf	45.00	111,600				
			6	Roofing underlayment, allocation	30	sq	110.00	3,300				
			7	Roofing, Aluminum Standing Seam, anodized	30	sq	720.00	21,600				
			8	Overhanging roof w/ soffit	205	sf	50.00	10,250				
			9	Doors HM Single	3	ea	1,300.00	3,900				
			10	Doors HM Double	2	ea	2,500.00	5,000				
			11	Doors, coiling 10'	1	ea	2,000.00	2,000				
			12	Windows, allocation	4	ea	4,000.00	16,000				
			13	Doors, interior w/ safety glass	7	ea	450.00	3,150				
			14	Interior Walls - Gypsum 24" metal studs	810	sf	10.00	8,100				
			15	Interior Walls - 8" CMU, painted	540	sf	12.00	6,480				
			16	Suspended Ceiling, complete	2,480	sf	10.00	24,800				
			17	Ceiling GWB - Fire Rated	2,480	sf	5.00	12,400				
			18	Flooring System, allocation for high traffic carpet or tile	2,480	sf	20.00	49,600				
			19	Wall Tile, bathrooms	320	sf	40.00	12,800				
			20	API Panels	2,040	sf	20.00	40,800				
			21	Block Veneer to 4' high, precast cap, estimate	815	sf	25.00	20,375				

CONSTRUCTION COST ESTIMATE

PROJECT: Central Valley Project	PREPARED BY: Regional Office, Sacramento, CA
DIVISION: West San Joaquin Division	ESTIMATE DATE: July 2007 (Revised after DEC)
UNIT: San Luis Unit -- Drainage System -- Westlands Water District-Central	ESTIMATE TYPE: Feasibility
FEATURE: Drainage Feature Re-Evaluation Feasibility Study	PRICE LEVEL: April 2006

PROPERTY CLASS	IDENTIFIED PROPERTY	PLANT ACCOUNT	ITEM	DESCRIPTION	QUANTITY	UNIT	PRICE	AMOUNT	FIELD COST	TOTAL FIELD COST	NONCONTRACT COST	CONSTRUCTION COST
12	03			WWD CENTRAL Se BIOTREATMENT PLANT (continued)								
		130		Structures and Improvements (continued)								
				(2) Administration Building (continued)								
			22	Laboratory Cabinets, basework	15	lf	350.00	5,250				
			23	Laboratory Cabinets, basework	20	lf	350.00	7,000				
			24	Laboratory Countertop, acidproof	70	sf	80.00	5,600				
			25	Fumehood, Cole Parmer 48" installed	1	ls	13,000.00	13,000				
			26	Lab furniture	485	sf	100.00	48,500				
			27	Lockers, single tier	8	ea	370.00	2,960				
			28	Lab Sink	1	ea	3,100.00	3,100				
			29	Eye/face wash combo	1	ea	1,200.00	1,200				
			30	Emergency Shower	1	ea	2,500.00	2,500				
			31	Fire Alarm Control Panel - 8 zone	1	ea	4,000.00	4,000				
			32	Battery Rack	1	ea	1,500.00	1,500				
			33	Smoke Detectors	6	ea	250.00	1,500				
			34	Fire Alarm Horn	2	ea	130.00	260				
			35	Fire Extinguishers, CO2 20lb	4	ea	365.00	1,460				
			36	Fire Extinguishers, 100 lb wheeled	1	ea	365.00	365				
			37	HVAC, per sf	2,480	sf	20.00	49,600				
			38	Plumbing, per sf	2,480	sf	10.00	24,800				
			39	Electrical, per sf	2,480	sf	20.00	49,600				
			40	Electrical, additional for well pump and generator	1	ls	40,000.00	40,000				
				Ancillary Facilities To Administration Building								
			41	75 kW Propane Generator	1	ea	40,000.00	40,000				
			42	Auto-Transfer Switch (provided by generator supplier)	1	ea	10,500.00	10,500				
			43	Installation of backup power equipment)+/- 30% of above items	1	ls	15,000.00	15,000				
				New Well								
			44	Driller Mobilization	1	ea	4,000.00	4,000				
			45	8" Well Construction	200	lf	45.00	9,000				
			46	Well Pump, installed w/ valving and controls	1	ea	10,000.00	10,000				
			47	Piping, 2"	100	lf	45.00	4,500				
			48	Reverse Osmosis for Potable Water, in Admin Building	1	ea	10,000.00	10,000				

CONSTRUCTION COST ESTIMATE

PROJECT: Central Valley Project	PREPARED BY: Regional Office, Sacramento, CA
DIVISION: West San Joaquin Division	ESTIMATE DATE: July 2007 (Revised after DEC)
UNIT: San Luis Unit -- Drainage System -- Westlands Water District-Central	ESTIMATE TYPE: Feasibility
FEATURE: Drainage Feature Re-Evaluation Feasibility Study	PRICE LEVEL: April 2006

PROPERTY CLASS	IDENTIFIED PROPERTY	PLANT ACCOUNT	ITEM	DESCRIPTION	QUANTITY	UNIT	PRICE	AMOUNT	FIELD COST	TOTAL FIELD COST	NONCONTRACT COST	CONSTRUCTION COST
12	03			WWD CENTRAL Se BIOTREATMENT PLANT (continued)								
		130		Structures and Improvements (continued)								
				(2) Administration Building (continued)								
			49	Mobilization (+/- 5%)				39,781				
			50	Unlisted Items (+/- 15%)				125,309				
			51	Allowance for Procurement Strategy (+/- 5%)				39,297				
				Subtotal				1,000,000				
				Contingencies (+/- 25%)				250,000				
				Field Cost - (2) Administration Building				1,250,000				
				(3) Solids Dewatering Building					2,300,000			
			1	Geotextile Fabric to Separate Native and Structural Fill	2,026	sf	0.50	1,013				
			2	Structural Fill Below Structures (imported material)	55	cy	60.00	3,300				
			3	Pile Installation, 50 ton, 60 ft	660	lf	65.00	42,900				
			4	Foundation	30	cy	700.00	21,000				
			5	Slab on grade	55	cy	600.00	33,000				
			6	Metal Bldg 20' eave, 40' span	2,000	sf	50.00	100,000				
			7	Roofing underlayment, allocation	25	sq	110.00	2,750				
			8	Roofing, Aluminum Standing Seam, anodized	25	sq	720.00	18,000				
			9	Interior Walls - 8" CMU, painted	360	sf	12.00	4,320				
			10	API Panels	3,600	sf	13.00	46,800				
			11	Overhanging roof w/ soffit	180	sf	50.00	9,000				
			12	Belt Presses - Furnish to Site	1	ea	500,000.00	500,000				
			13	Belt Press - Install +/- 30% of Furnish	1	ls	150,000.00	150,000				
			14	Elevated Walkway	400	sf	60.00	24,000				
			15	Polymer System, installed	1	ea	30,000.00	30,000				
			16	Monorail - 3 ton, 30' span, installed	1	ea	30,000.00	30,000				
			17	Conveyors, installed	2	ea	60,000.00	120,000				
			18	HVAC, per sf	2,000	sf	20.00	40,000				
			19	Plumbing, per sf	2,000	sf	10.00	20,000				
			20	Mechanical Piping, allocation	1	ls	100,000.00	100,000				
			21	Electrical, allocation +/- 12% of above items	1	ls	150,000.00	150,000				

CONSTRUCTION COST ESTIMATE

PROJECT: Central Valley Project	PREPARED BY: Regional Office, Sacramento, CA
DIVISION: West San Joaquin Division	ESTIMATE DATE: July 2007 (Revised after DEC)
UNIT: San Luis Unit -- Drainage System -- Westlands Water District-Central	ESTIMATE TYPE: Feasibility
FEATURE: Drainage Feature Re-Evaluation Feasibility Study	PRICE LEVEL: April 2006

PROPERTY CLASS	IDENTIFIED PROPERTY	PLANT ACCOUNT	ITEM	DESCRIPTION	QUANTITY	UNIT	PRICE	AMOUNT	FIELD COST	TOTAL FIELD COST	NONCONTRACT COST	CONSTRUCTION COST
12	03			WWD CENTRAL Se BIOTREATMENT PLANT (continued)								
		130		Structures and Improvements (continued)								
				(3) Solids Dewatering Building (continued)								
			22	Fire Extinguishers, CO2 20lb	3	ea	365.00	1,095				
			23	Mobilization (+/- 5%)				72,359				
			24	Unlisted Items (+/- 15%)				227,931				
			25	Allowance for Procurement Strategy (+/- 5%)				102,533				
				Subtotal				1,850,000				
				Contingencies (+/- 25%)				450,000				
				Field Cost - (3) Solids Dewatering Building				2,300,000				
				(4) Mechanical Building					1,500,000			
			1	Geotextile Fabric to Separate Native and Structural Fill	3,576	sf	0.50	1,788				
			2	Structural Fill Below Structures (imported material)	65	cy	60.00	3,900				
			3	Pile Installation, 50 ton, 60 ft	900	lf	65.00	58,500				
			4	Foundation	50	cy	700.00	35,000				
			5	Formwork	225	sf	25.00	5,625				
			6	Rebar #5 12"OC/EWEF	10	ton	3,500.00	35,000				
			7	Concrete Material	175	cy	190.00	33,250				
			8	Concrete Labor	175	cy	135.00	23,625				
			9	Metal Bldg 20' eave, 50' span	3,100	sf	50.00	155,000				
			10	Roofing underlayment, allocation	35	sq	110.00	3,850				
			11	Roofing, Aluminum Standing Seam, anodized	35	sq	720.00	25,200				
			12	API Panels	4,480	sf	13.00	58,240				
			13	Overhanging roof w/ soffit	225	sf	50.00	11,250				
			14	Interior Walls - 8" CMU, painted	480	sf	12.00	5,760				
			15	Doors HM Single	3	ea	1,300.00	3,900				
			16	Doors, coiling 10'	2	ea	2,000.00	4,000				
			17	Windows, allocation	2	ea	4,000.00	8,000				
			18	Doors, interior w/ safety glass	2	ea	450.00	900				
			19	HVAC Mech Room, per sf	3,100	sf	20.00	62,000				
			20	HVAC Pipe Gallery, per sf	2,380	sf	20.00	47,600				

CONSTRUCTION COST ESTIMATE

PROJECT: Central Valley Project	PREPARED BY: Regional Office, Sacramento, CA
DIVISION: West San Joaquin Division	ESTIMATE DATE: July 2007 (Revised after DEC)
UNIT: San Luis Unit -- Drainage System -- Westlands Water District-Central	ESTIMATE TYPE: Feasibility
FEATURE: Drainage Feature Re-Evaluation Feasibility Study	PRICE LEVEL: April 2006

PROPERTY CLASS	IDENTIFIED PROPERTY	PLANT ACCOUNT	ITEM	DESCRIPTION	QUANTITY	UNIT	PRICE	AMOUNT	FIELD COST	TOTAL FIELD COST	NONCONTRACT COST	CONSTRUCTION COST
12	03			WWD CENTRAL Se BIOTREATMENT PLANT (continued)								
		130		Structures and Improvements (continued)								
				(4) Mechanical Building (continued)								
			21	Plumbing, per sf	3,100	sf	10.00	31,000				
			22	Electrical standard structure, per sf	3,100	sf	20.00	62,000				
			23	Fire Extinguishers, CO2 20lb	6	ea	365.00	2,190				
			24	Foul Air Blowers, 3,900 cfm @ 12 inches	2	ea	9,000.00	18,000				
			25	Installation, +/- 30% of above	1	ls	5,400.00	5,400				
			26	Aeration Blowers, 800 cfm @ 8 psig	2	ea	35,000.00	70,000				
			27	Installation, +/- 30% of above	1	ls	21,000.00	21,000				
			28	Flow Control Valve	1	ea	11,500.00	11,500				
			29	Aeration Diffuser System, installed	535	ea	85.00	45,475				
			30	Instrument Air Compressor, 5 hp	1	ea	4,000.00	4,000				
			31	Installation, +/- 30% of above	1	ls	1,200.00	1,200				
			32	Feed Tank, 8400 gal linear PE	1	ea	40,000.00	40,000				
			33	Installation, +/- 30% of above	1	ls	12,000.00	12,000				
			34	Utility Water / Belt Press Wash Water, ~100 gpm @125psig	2	ea	15,000.00	30,000				
			35	Installation, +/- 30% of above	1	ls	9,000.00	9,000				
				Supply / Exhaust Fans								
			36	Pipe Gallery (40,000 cfm)	2	ea	4,000.00	8,000				
			37	Mech Room (10,000 cfm)	2	ea	1,650.00	3,300				
			38	Solids Dewatering (21,000 cfm)	2	ea	2,500.00	5,000				
			39	Mobilization (+/- 5%)				48,073				
			40	Unlisted Items (+/- 15%)				151,429				
			41	Allowance for Procurement Strategy (+/- 5%)				39,046				
				Subtotal				1,200,000				
				Contingencies (+/- 25%)				300,000				
				Field Cost - (4) Mechanical Building				1,500,000				

CONSTRUCTION COST ESTIMATE

PROJECT: Central Valley Project	PREPARED BY: Regional Office, Sacramento, CA
DIVISION: West San Joaquin Division	ESTIMATE DATE: July 2007 (Revised after DEC)
UNIT: San Luis Unit -- Drainage System -- Westlands Water District-Central	ESTIMATE TYPE: Feasibility
FEATURE: Drainage Feature Re-Evaluation Feasibility Study	PRICE LEVEL: April 2006

PROPERTY CLASS	IDENTIFIED PROPERTY	PLANT ACCOUNT	ITEM	DESCRIPTION	QUANTITY	UNIT	PRICE	AMOUNT	FIELD COST	TOTAL FIELD COST	NONCONTRACT COST	CONSTRUCTION COST
12	03			WWD CENTRAL Se BIOTREATMENT PLANT (continued)								
		130		Structures and Improvements (continued)								
				(5) Bioreactor					7,900,000			
			1	Geotextile Fabric to Separate Native and Structural Fill	10,800	sf	0.50	5,400				
			2	Structural Fill Below Structures (imported material)	200	cy	60.00	12,000				
			3	Pile Installation, 50 ton, 60 ft	17,040	lf	65.00	1,107,600				
				Slab on Grade - Pipe Gallery								
			4	Formwork	225	sf	25.00	5,625				
			5	Rebar #8-6"OC EW/EF	20	ton	3,500.00	70,000				
			6	Waterstop	225	lf	15.00	3,375				
			7	Concrete Material	175	cy	190.00	33,250				
			8	Concrete Labor	175	cy	135.00	23,625				
				Elevated Slab - Pipe Gallery								
			9	Metal Decking	2,550	sf	25.00	63,750				
			10	Structural Steel (W 12x26 - 30'L @ 10' OC)	225	lf	55.00	12,375				
			11	Formwork	30	sf	25.00	750				
			12	Rebar #4 12"OC EW	2	ton	3,500.00	7,000				
			13	Concrete Material	65	cy	190.00	12,350				
			14	Concrete Labor	65	cy	135.00	8,775				
				Slab on Grade - Bioreactors								
			15	Formwork	2,100	sf	25.00	52,500				
			16	Rebar #8-6"OC EW/EF	70	ton	3,500.00	245,000				
			17	Waterstop	700	lf	15.00	10,500				
			18	Concrete Material	840	cy	190.00	159,600				
			19	Concrete Labor	840	cy	135.00	113,400				
			20	Concrete Liner Material	5,120	sf	10.00	51,200				
				Long Walls - Bioreactors								
			21	Formwork	26,400	sf	25.00	660,000				
			22	Rebar #8-6"OC EW/EF	120	ton	3,500.00	420,000				
			23	Waterstop	660	lf	15.00	9,900				
			24	Concrete Material	1,465	cy	190.00	278,350				
			25	Concrete Labor	1,465	cy	135.00	197,775				
			26	Concrete Liner Material	5,120	sf	10.00	51,200				

CONSTRUCTION COST ESTIMATE

PROJECT: Central Valley Project	PREPARED BY: Regional Office, Sacramento, CA
DIVISION: West San Joaquin Division	ESTIMATE DATE: July 2007 (Revised after DEC)
UNIT: San Luis Unit -- Drainage System -- Westlands Water District-Central	ESTIMATE TYPE: Feasibility
FEATURE: Drainage Feature Re-Evaluation Feasibility Study	PRICE LEVEL: April 2006

PROPERTY CLASS	IDENTIFIED PROPERTY	PLANT ACCOUNT	ITEM	DESCRIPTION	QUANTITY	UNIT	PRICE	AMOUNT	FIELD COST	TOTAL FIELD COST	NONCONTRACT COST	CONSTRUCTION COST
12	03			WWD CENTRAL Se BIOTREATMENT PLANT (continued)								
		130		Structures and Improvements (continued)								
				(5) Bioreactor (continued)								
				Short Walls - Bioreactors								
			27	Formwork	21,650	sf	25.00	541,250				
			28	Rebar #8-6"OC EW/EF	100	ton	3,500.00	350,000				
			29	Waterstop	530	lf	15.00	7,950				
			30	Concrete Material	1,200	cy	190.00	228,000				
			31	Concrete Labor	1,200	cy	135.00	162,000				
			32	Concrete Liner Material	4,100	sf	10.00	41,000				
				End Wall - Gallery Room								
			33	Formwork	1,000	sf	25.00	25,000				
			34	Rebar #5-12"OC EW/EF	1	ton	3,500.00	3,500				
			35	Waterstop	55	lf	15.00	825				
			36	Concrete Material	30	cy	190.00	5,700				
			37	Concrete Labor	30	cy	135.00	4,050				
			38	Stairway to Top of Bioreactor Gallery Roof	1	ea	15,000.00	15,000				
			39	Railing on top of Bioreactors Roofs	60	lf	145.00	8,700				
			40	Mobilization (+/- 5%)				250,414				
			41	Unlisted Items (+/- 15%)				788,803				
			42	Allowance for Procurement Strategy (+/- 5%)				252,508				
				Subtotal				6,300,000				
				Contingencies (+/- 25%)				1,600,000				
				Field Cost - (5) Bioreactor				7,900,000				
				(6) Clarifier					800,000			
			1	Geotextile Fabric to Separate Native and Structural Fill	1,966	sf	0.50	983				
			2	Structural Fill Below Structures (imported material)	35	cy	60.00	2,100				
			3	Pile Installation, 50 ton, 60 ft	2,160	lf	65.00	140,400				
				Slab on Grade - Clarifier								
			4	Formwork	395	sf	25.00	9,875				
			5	Rebar #6-12"OC EW/EF	5	ton	3,500.00	17,500				

CONSTRUCTION COST ESTIMATE

PROJECT: Central Valley Project	PREPARED BY: Regional Office, Sacramento, CA
DIVISION: West San Joaquin Division	ESTIMATE DATE: July 2007 (Revised after DEC)
UNIT: San Luis Unit -- Drainage System -- Westlands Water District-Central	ESTIMATE TYPE: Feasibility
FEATURE: Drainage Feature Re-Evaluation Feasibility Study	PRICE LEVEL: April 2006

PROPERTY CLASS	IDENTIFIED PROPERTY	PLANT ACCOUNT	ITEM	DESCRIPTION	QUANTITY	UNIT	PRICE	AMOUNT	FIELD COST	TOTAL FIELD COST	NONCONTRACT COST	CONSTRUCTION COST
12	03			WWD CENTRAL Se BIOTREATMENT PLANT (continued)								
		130		Structures and Improvements (continued)								
				(6) Clarifier (continued)								
			6	Waterstop	160	lf	15.00	2,400				
			7	Concrete Material	145	cy	190.00	27,550				
			8	Concrete Labor	145	cy	135.00	19,575				
			9	Concrete Liner Material	1,600	sf	10.00	16,000				
				Walls - Clarifier								
			10	Formwork	4,400	sf	25.00	110,000				
			11	Rebar #6-10"OC EW/EF	5	ton	3,500.00	17,500				
			12	Waterstop	140	lf	15.00	2,100				
			13	Concrete Material	160	cy	190.00	30,400				
			14	Concrete Labor	160	cy	135.00	21,600				
			15	Concrete Liner Material	2,550	sf	10.00	25,500				
			16	FRP Cover	1,600	sf	40.00	64,000				
			17	Mobilization (+/- 5%)				25,374				
			18	Unlisted Items (+/- 15%)				79,929				
			19	Allowance for Procurement Strategy (+/- 5%)				27,214				
				Subtotal				640,000				
				Contingencies (+/- 25%)				160,000				
				Field Cost - (6) Clarifier				800,000				
				(7) Backwash Tank					770,000			
			1	Geotextile Fabric to Separate Native and Structural Fill	1,966	sf	0.50	983				
			2	Structural Fill Below Structures (imported material)	75	cy	60.00	4,500				
			3	Pile Installation, 50 ton, 60 ft	1,920	lf	65.00	124,800				
				Slab on Grade - Backwash Tank								
			4	Formwork	395	sf	25.00	9,875				
			5	Rebar #6-12"OC EW/EF	5	ton	3,500.00	17,500				
			6	Waterstop	160	lf	15.00	2,400				
			7	Concrete Material	145	cy	190.00	27,550				
			8	Concrete Labor	145	cy	135.00	19,575				

CONSTRUCTION COST ESTIMATE

PROJECT: Central Valley Project	PREPARED BY: Regional Office, Sacramento, CA
DIVISION: West San Joaquin Division	ESTIMATE DATE: July 2007 (Revised after DEC)
UNIT: San Luis Unit -- Drainage System -- Westlands Water District-Central	ESTIMATE TYPE: Feasibility
FEATURE: Drainage Feature Re-Evaluation Feasibility Study	PRICE LEVEL: April 2006

PROPERTY CLASS	IDENTIFIED PROPERTY	PLANT ACCOUNT	ITEM	DESCRIPTION	QUANTITY	UNIT	PRICE	AMOUNT	FIELD COST	TOTAL FIELD COST	NONCONTRACT COST	CONSTRUCTION COST
12	03			WWD CENTRAL Se BIOTREATMENT PLANT (continued)								
		130		Structures and Improvements (continued)								
				(7) Backwash Tank (continued)								
			9	Concrete Liner Material	1,600	sf	10.00	16,000				
				Walls - Backwash Tank								
			10	Formwork	5,900	sf	25.00	147,500				
			11	Rebar #6-10"OC EW/EF	5	ton	3,500.00	17,500				
			12	Waterstop	150	lf	15.00	2,250				
			13	Concrete Material	220	cy	190.00	41,800				
			14	Concrete Labor	220	cy	135.00	29,700				
			15	Concrete Liner Material	2,550	sf	10.00	25,500				
			16	Mobilization (+/- 5%)				24,372				
			17	Unlisted Items (+/- 15%)				76,771				
			18	Allowance for Procurement Strategy (+/- 5%)				31,425				
				Subtotal				620,000				
				Contingencies (+/- 25%)				150,000				
				Field Cost - (7) Backwash Tank				770,000				
				(8) Feed Tank					240,000			
			1	Geotextile Fabric to Separate Native and Structural Fill	316	sf	0.50	158				
			2	Structural Fill Below Structures (imported material)	5	cy	60.00	300				
			3	Pile Installation, 50 ton, 60 ft	420	lf	65.00	27,300				
				Slab on Grade - Feed Tank								
			4	Formwork	160	sf	25.00	4,000				
			5	Rebar #6-12"OC EW/EF	1	ton	3,500.00	3,500				
			6	Waterstop	65	lf	15.00	975				
			7	Concrete Material	20	cy	190.00	3,800				
			8	Concrete Labor	20	cy	135.00	2,700				
			9	Concrete Liner Material	255	sf	10.00	2,550				
				Walls - Feed Tank								
			10	Formwork	2,260	sf	25.00	56,500				
			11	Rebar #6-10"OC EW/EF	3	ton	3,500.00	10,500				

CONSTRUCTION COST ESTIMATE

PROJECT: Central Valley Project	PREPARED BY: Regional Office, Sacramento, CA
DIVISION: West San Joaquin Division	ESTIMATE DATE: July 2007 (Revised after DEC)
UNIT: San Luis Unit -- Drainage System -- Westlands Water District-Central	ESTIMATE TYPE: Feasibility
FEATURE: Drainage Feature Re-Evaluation Feasibility Study	PRICE LEVEL: April 2006

PROPERTY CLASS	IDENTIFIED PROPERTY	PLANT ACCOUNT	ITEM	DESCRIPTION	QUANTITY	UNIT	PRICE	AMOUNT	FIELD COST	TOTAL FIELD COST	NONCONTRACT COST	CONSTRUCTION COST
12	03			WWD CENTRAL Se BIOTREATMENT PLANT (continued)								
		130		Structures and Improvements (continued)								
				(8) Feed Tank (continued)								
			12	Waterstop	60	lf	15.00	900				
			13	Concrete Material	65	cy	190.00	12,350				
			14	Concrete Labor	65	cy	135.00	8,775				
			15	Concrete Liner Material	1,000	sf	10.00	10,000				
			16	FRP Cover	255	sf	40.00	10,200				
			17	Mobilization (+/- 5%)				7,725				
			18	Unlisted Items (+/- 15%)				24,335				
			19	Allowance for Procurement Strategy (+/- 5%)				8,432				
				Subtotal				195,000				
				Contingencies (+/- 25%)				45,000				
				Field Cost - (8) Feed Tank				240,000				
				(9) Oxidation Tank					1,200,000			
			1	Geotextile Fabric to Separate Native and Structural Fill	3,320	sf	0.50	1,660				
			2	Structural Fill Below Structures (imported material)	60	cy	60.00	3,600				
			3	Pile Installation, 50 ton, 60 ft	3,660	lf	65.00	237,900				
				Slab on Grade - Oxidation Tank								
			4	Formwork	525	sf	25.00	13,125				
			5	Rebar #6-12"OC EW/EF	10	ton	3,500.00	35,000				
			6	Waterstop	210	lf	15.00	3,150				
			7	Concrete Material	260	cy	190.00	49,400				
			8	Concrete Labor	260	cy	135.00	35,100				
			9	Concrete Liner Material	1,135	sf	10.00	11,350				
				Walls - Oxidation Tank								
			10	Formwork	8,170	sf	25.00	204,250				
			11	Rebar #6-10"OC EW/EF	15	ton	3,500.00	52,500				
			12	Waterstop	200	lf	15.00	3,000				
			13	Concrete Material	300	cy	190.00	57,000				
			14	Concrete Labor	300	cy	135.00	40,500				

CONSTRUCTION COST ESTIMATE

PROJECT: Central Valley Project	PREPARED BY: Regional Office, Sacramento, CA
DIVISION: West San Joaquin Division	ESTIMATE DATE: July 2007 (Revised after DEC)
UNIT: San Luis Unit -- Drainage System -- Westlands Water District-Central	ESTIMATE TYPE: Feasibility
FEATURE: Drainage Feature Re-Evaluation Feasibility Study	PRICE LEVEL: April 2006

PROPERTY CLASS	IDENTIFIED PROPERTY	PLANT ACCOUNT	ITEM	DESCRIPTION	QUANTITY	UNIT	PRICE	AMOUNT	FIELD COST	TOTAL FIELD COST	NONCONTRACT COST	CONSTRUCTION COST
12	03			WWD CENTRAL Se BIOTREATMENT PLANT (continued)								
		130		Structures and Improvements (continued)								
				(9) Oxidation Tank (continued)								
			15	Concrete Liner Material	2,150	sf	10.00	21,500				
			16	Mobilization (+/- 5%)				38,452				
			17	Unlisted Items (+/- 15%)				121,123				
			18	Allowance for Procurement Strategy (+/- 5%)				51,390				
				Subtotal				980,000				
				Contingencies (+/- 25%)				220,000				
				Field Cost - (9) Oxidation Tank				1,200,000				
				(10) Biofilter - Odor Control Unit					390,000			
				Perimeter Slab for Stem								
			1	Formwork	1,320	sf	25.00	33,000				
			2	Rebar #5-6"OC EW	1	ton	3,500.00	3,500				
			3	Concrete Material	25	cy	190.00	4,750				
			4	Concrete Labor	25	cy	135.00	3,375				
				Perimeter Stem Wall								
			5	Formwork	2,200	sf	25.00	55,000				
			6	Rebar #5-12"OC EW	5	ton	3,500.00	17,500				
			7	Concrete Material	130	cy	190.00	24,700				
			8	Concrete Labor	130	cy	135.00	17,550				
			9	Geotextile, under pea gravel	670	sy	4.50	3,015				
			10	Pea Gravel	140	cy	60.00	8,400				
			11	Non-woven filter fabric	220	sy	9.00	1,980				
			12	Wood Chip, media	110	cy	45.00	4,950				
			13	Compost, media	110	cy	55.00	6,050				
			14	4" PVC, Sch 80, glued	150	lf	40.00	6,000				
			15	4" fittings, allocation	1	ls	1,500.00	1,500				
			16	2" PVC, Sch 80, glued	300	lf	30.00	9,000				
			17	2" fittings, allocation	1	ls	1,125.00	1,125				
			18	1" Poly irrigation hose	100	lf	8.00	800				

CONSTRUCTION COST ESTIMATE

PROJECT: Central Valley Project	PREPARED BY: Regional Office, Sacramento, CA
DIVISION: West San Joaquin Division	ESTIMATE DATE: July 2007 (Revised after DEC)
UNIT: San Luis Unit -- Drainage System -- Westlands Water District-Central	ESTIMATE TYPE: Feasibility
FEATURE: Drainage Feature Re-Evaluation Feasibility Study	PRICE LEVEL: April 2006

PROPERTY CLASS	IDENTIFIED PROPERTY	PLANT ACCOUNT	ITEM	DESCRIPTION	QUANTITY	UNIT	PRICE	AMOUNT	FIELD COST	TOTAL FIELD COST	NONCONTRACT COST	CONSTRUCTION COST
12	03			WWD CENTRAL Se BIOTREATMENT PLANT (continued)								
		130		Structures and Improvements (continued)								
				(10) Biofilter - Odor Control Unit (continued)								
			19	Sprinklers	8	ea	75.00	600				
			20	Non-freeze hose bibbs	2	ea	225.00	450				
			21	20" Fiberglass Duct Supply, yard	150	lf	240.00	36,000				
			22	Misc fittings and dampers, etc	1	ls	7,500.00	7,500				
			23	Mobilization (+/- 5%)				12,337				
			24	Unlisted Items (+/- 15%)				38,862				
			25	Allowance for Procurement Strategy (+/- 5%)				12,055				
				Subtotal				310,000				
				Contingencies (+/- 25%)				80,000				
				Field Cost - (10) Biofilter - Odor Control Unit				390,000				
				(11) Septic System					280,000			
			1	Pump Wetwell, 5' Dia	1	ea	2,700.00	2,700				
			2	Duplex chopper pump station	1	ea	11,250.00	11,250				
			3	Septic Tank, 2500 gal	1	ea	4,000.00	4,000				
			4	Distribution Box	1	ea	2,250.00	2,250				
			5	Drain Rock	1,470	cy	60.00	88,200				
			6	Supply Pipe, 4" Sch 80 PVC	250	ea	40.00	10,000				
			7	Drain Pipe, 4" perf.	660	lf	7.00	4,620				
			8	Filter Fabric	735	sy	9.00	6,615				
			9	Drain Rock	735	cy	60.00	44,100				

CONSTRUCTION COST ESTIMATE

PROJECT: Central Valley Project	PREPARED BY: Regional Office, Sacramento, CA
DIVISION: West San Joaquin Division	ESTIMATE DATE: July 2007 (Revised after DEC)
UNIT: San Luis Unit -- Drainage System -- Westlands Water District-Central	ESTIMATE TYPE: Feasibility
FEATURE: Drainage Feature Re-Evaluation Feasibility Study	PRICE LEVEL: April 2006

PROPERTY CLASS	IDENTIFIED PROPERTY	PLANT ACCOUNT	ITEM	DESCRIPTION	QUANTITY	UNIT	PRICE	AMOUNT	FIELD COST	TOTAL FIELD COST	NONCONTRACT COST	CONSTRUCTION COST
12	03			WWD CENTRAL Se BIOTREATMENT PLANT (continued)								
		130		Structures and Improvements (continued)								
				(11) Septic System (continued)								
			10	Mobilization (+/- 5%)				8,687				
			11	Unlisted Items (+/- 15%)				27,363				
			12	Allowance for Procurement Strategy (+/- 5%)				10,215				
				Subtotal				220,000				
				Contingencies (+/- 25%)				60,000				
				Field Cost - (11) Septic System				280,000				
				Field Cost - Structures and Improvements				17,830,000				
		152		Waterways					10,920,000			
				(1) BioReactor Internals					9,300,000			
				6" Concrete Filled PVC Piers								
			1	Sch 80 PVC Pipe	560	lf	50.00	28,000				
			2	Concrete and Placement	5	cy	1,000.00	5,000				
			3	GRC Panel	4,100	sf	20.00	82,000				
			4	Bottom Nozzles	9,100	lf	6.00	54,600				
			5	Concrete Topping Slab	75	sf	525.00	39,375				
			6	4" Filtrate Lateral, HDPE w/ orifice holes at 3'8"OC, incl supports	1,215	lf	40.00	48,600				
			7	4" Pipe link seal, 6" hole + sleeve	32	ea	520.00	16,640				
			8	18" Backwash Pipe, HDPE	160	lf	165.00	26,400				
			9	18" Pipe link seal, 24" hole + sleeve	32	ea	1,700.00	54,400				
			10	14" Backwash Discharge, perforated, HDPE	575	lf	170.00	97,750				
			11	14" Pipe link seal, 18" hole + sleeve	32	ea	1,100.00	35,200				
			12	6" Feed Pipe, HDPE	240	lf	50.00	12,000				
			13	6" Fittings, Straight Ts, Red. Ts, elbows (typ), HDPE	48	ea	285.00	13,680				
			14	6" Pipe link seal, 10" hole, HDPE	8	ea	405.00	3,240				
			15	4" Feed Pipe, perforated, HDPE	1,185	lf	45.00	53,325				
			16	4" Fittings, Straight Ts, Red. Ts, elbows (typ), HDPE	32	ea	150.00	4,800				

CONSTRUCTION COST ESTIMATE

PROJECT: Central Valley Project	PREPARED BY: Regional Office, Sacramento, CA
DIVISION: West San Joaquin Division	ESTIMATE DATE: July 2007 (Revised after DEC)
UNIT: San Luis Unit -- Drainage System -- Westlands Water District-Central	ESTIMATE TYPE: Feasibility
FEATURE: Drainage Feature Re-Evaluation Feasibility Study	PRICE LEVEL: April 2006

PROPERTY CLASS	IDENTIFIED PROPERTY	PLANT ACCOUNT	ITEM	DESCRIPTION	QUANTITY	UNIT	PRICE	AMOUNT	FIELD COST	TOTAL FIELD COST	NONCONTRACT COST	CONSTRUCTION COST
12	03			WWD CENTRAL Se BIOTREATMENT PLANT (continued)								
		152		Waterways (continued)								
				(1) BioReactor Internals (continued)								
			17	Media	3,300,000	lbs	0.60	1,980,000				
			18	Media Installation	3,300,000	lbs	0.10	330,000				
			19	FRP Cover	8	ea	15,000.00	120,000				
			20	AB Met Inoculums, installed	825,000	gal	3.50	2,887,500				
			21	Mobilization (+/- 5%)				294,626				
			22	Unlisted Items (+/- 15%)				928,070				
			23	Allowance for Procurement Strategy (+/- 5%)				384,794				
				Subtotal				7,500,000				
				Contingencies (+/- 25%)				1,800,000				
				Field Cost - (1) BioReactor Internals				9,300,000				
				(2) Filter Mechanical - In Pipe Gallery					1,000,000			
				Feed, Recirculate, and Filtrate								
			1	4" Piping, PVC Piping	240	lf	40.00	9,600				
			2	4" Fittings, Ts, Elbows, Van Stone Flanges, etc	96	ea	150.00	14,400				
			3	4" Valves, butterfly geared manual actuator	48	ea	675.00	32,400				
			4	6" Piping, PVC Piping	240	lf	65.00	15,600				
			5	6" Fittings, Ts, Elbows, Van Stone Flanges, etc	96	ea	285.00	27,360				
			6	6" Valves, butterfly geared manual actuator, typ for check valves	12	ea	1,000.00	12,000				
			7	6" PVC Swing Check Valves	12	ea	2,250.00	27,000				
			8	6" Valves, butterfly pneunm. act. - bw, feed, filtrate return, filtrate	20	ea	2,100.00	42,000				
			9	6" Magnetic Flowmeters	4	ea	7,500.00	30,000				
			10	pH/ORP Sensor Assemblies (sensor, piping, valving, tap)	16	ea	1,800.00	28,800				
			11	Pressure Gauge on Diaphragm, assembly	8	ea	770.00	6,160				
			12	Pressure Transmitters on Diaphragm, assembly	24	ea	3,000.00	72,000				
			13	Static Mixers, 6" dia, sch 80 PVC, w/ injection port	8	ea	2,500.00	20,000				
			14	1/2" dia magnetic flow meter	8	ea	2,600.00	20,800				
			15	Misc 1/2" hardware: solenoid, globe, ball check	8	ea	1,125.00	9,000				
			16	2" Air Release Valves	8	ea	1,400.00	11,200				

CONSTRUCTION COST ESTIMATE

PROJECT: Central Valley Project	PREPARED BY: Regional Office, Sacramento, CA
DIVISION: West San Joaquin Division	ESTIMATE DATE: July 2007 (Revised after DEC)
UNIT: San Luis Unit -- Drainage System -- Westlands Water District-Central	ESTIMATE TYPE: Feasibility
FEATURE: Drainage Feature Re-Evaluation Feasibility Study	PRICE LEVEL: April 2006

PROPERTY CLASS	IDENTIFIED PROPERTY	PLANT ACCOUNT	ITEM	DESCRIPTION	QUANTITY	UNIT	PRICE	AMOUNT	FIELD COST	TOTAL FIELD COST	NONCONTRACT COST	CONSTRUCTION COST
12	03			WWD CENTRAL Se BIOTREATMENT PLANT (continued)								
		152		Waterways (continued)								
				(2) Filter Mechanical - In Pipe Gallery (continued)								
				Backwash Supply and Waste Piping								
			17	18" Dia Pneumatic BF Valve, lug	8	ea	11,500.00	92,000				
			18	18" Dia Pipe HDPE	120	lf	100.00	12,000				
			19	18" Dia Fittings	24	ea	1,700.00	40,800				
			20	14" Backwash Waste	240	lf	75.00	18,000				
			21	14" Valves	16	ea	2,400.00	38,400				
			22	14" Fittings	32	ea	1,000.00	32,000				
			23	Foul Air, 8" FRP	200	ea	100.00	20,000				
			24	Mobilization (+/- 5%)				31,576				
			25	Unlisted Items (+/- 15%)				99,464				
			26	Allowance for Procurement Strategy (+/- 5%)				37,440				
				Subtotal				800,000				
				Contingencies (+/- 25%)				200,000				
				Field Cost - (2) Filter Mechanical - In Pipe Gallery				1,000,000				
				(3) Mechanical Room and Piping Gallery					380,000			
			1	Blower Piping, 10" 304 SS Sch 10 (incl yard piping)	140	lf	330.00	46,200				
			2	10" 304 SS Fittings	10	ea	1,800.00	18,000				
			3	10" BF Valve, Ductile Iron w/ Stainless Internals	2	ea	1,500.00	3,000				
			4	Feed Piping, 8" HDPE	140	lf	60.00	8,400				
			5	8" Fittings	10	ea	285.00	2,850				
			6	Filtrate Piping, 8" HDPE	140	lf	60.00	8,400				
			7	8" Fittings	10	ea	2,100.00	21,000				
			8	Backwash Supply, dual 18" on each side on each side of pipe gallery	220	lf	100.00	22,000				
			9	Backwash Piping, 18"	60	lf	100.00	6,000				
			10	18" Fittings	6	ea	1,800.00	10,800				
			11	Backwash Waste, dual 24" on each side on each side of pipe gallery	370	lf	145.00	53,650				
			12	Nutrient Feed Loop	275	lf	40.00	11,000				
			13	24" Fiberglass Duct Supply	185	lf	170.00	31,450				

CONSTRUCTION COST ESTIMATE

PROJECT: Central Valley Project	PREPARED BY: Regional Office, Sacramento, CA
DIVISION: West San Joaquin Division	ESTIMATE DATE: July 2007 (Revised after DEC)
UNIT: San Luis Unit -- Drainage System -- Westlands Water District-Central	ESTIMATE TYPE: Feasibility
FEATURE: Drainage Feature Re-Evaluation Feasibility Study	PRICE LEVEL: April 2006

PROPERTY CLASS	IDENTIFIED PROPERTY	PLANT ACCOUNT	ITEM	DESCRIPTION	QUANTITY	UNIT	PRICE	AMOUNT	FIELD COST	TOTAL FIELD COST	NONCONTRACT COST	CONSTRUCTION COST
12	03			WWD CENTRAL Se BIOTREATMENT PLANT (continued)								
		152		Waterways (continued)								
				(3) Mechanical Room and Piping Gallery (continued)								
			14	Mobilization (+/- 5%)				12,138				
			15	Unlisted Items (+/- 15%)				38,233				
			16	Allowance for Procurement Strategy (+/- 5%)				16,879				
				Subtotal				310,000				
				Contingencies (+/- 25%)				70,000				
				Field Cost - (3) Mechanical Room and Piping Gallery				380,000				
				(4) Other Mechanical Room								
				Backwash Supply					240,000			
			1	18" Magnetic Flow Meter	1	ea	30,000.00	30,000				
			2	Pressure Gauge Assemblies	4	ea	770.00	3,080				
			3	Pressure Transmitter Assemblies	1	ea	3,000.00	3,000				
			4	Backwash Strainer DPIT Assembly	1	ea	3,000.00	3,000				
			5	24" Backwash Tank Isolation Valve, geared/manual	1	ea	3,000.00	3,000				
			6	18" butterfly valves, geared / manual	2	ea	11,500.00	23,000				
			7	18" check valve	1	ea	20,000.00	20,000				
			8	Backwash Strainer (18"), allocation	1	ea	25,000.00	25,000				
			9	Dissolved Oxygen Sensors, Oxidation Tanks	1	ea	8,500.00	8,500				
				Backwash Clarifier								
			10	Pressure Gauge Assemblies	2	ea	770.00	1,540				
			11	Pressure Transmitter Assemblies	2	ea	3,000.00	6,000				
			12	High level float switch	2	ea	400.00	800				
			13	4" PVC Swing Check Valves	1	ea	2,250.00	2,250				
			14	4" Eccentric Plug Valves	9	ea	520.00	4,680				
				Nutrient Feed System								
			15	High level float switch	1	ea	400.00	400				
			16	Ultrasonic Level Sensor/Transmitter	1	ea	1,200.00	1,200				
			17	Globe Valves, 3"	7	ea	450.00	3,150				
			18	Pressure Gauge Assemblies	1	ea	770.00	770				

CONSTRUCTION COST ESTIMATE

PROJECT: Central Valley Project	PREPARED BY: Regional Office, Sacramento, CA
DIVISION: West San Joaquin Division	ESTIMATE DATE: July 2007 (Revised after DEC)
UNIT: San Luis Unit -- Drainage System -- Westlands Water District-Central	ESTIMATE TYPE: Feasibility
FEATURE: Drainage Feature Re-Evaluation Feasibility Study	PRICE LEVEL: April 2006

PROPERTY CLASS	IDENTIFIED PROPERTY	PLANT ACCOUNT	ITEM	DESCRIPTION	QUANTITY	UNIT	PRICE	AMOUNT	FIELD COST	TOTAL FIELD COST	NONCONTRACT COST	CONSTRUCTION COST
12	03			WWD CENTRAL Se BIOTREATMENT PLANT (continued)								
		152		Waterways (continued)								
				(4) Other Mechanical Room (continued)								
			19	High Pressure Relief Valves	2	ea	1,125.00	2,250				
				Drain Sump								
			20	High level float switch	1	ea	400.00	400				
			21	Ultrasonic Level Sensor/Transmitter	1	ea	1,200.00	1,200				
			22	4" PVC Swing Check Valves	2	ea	2,250.00	4,500				
			23	4" Butterfly valves	2	ea	400.00	800				
			24	Mobilization (+/- 5%)				7,426				
			25	Unlisted Items (+/- 15%)				23,392				
			26	Allowance for Procurement Strategy (+/- 5%)				10,662				
				Subtotal				190,000				
				Contingencies (+/- 25%)				50,000				
				Field Cost - (4) Other Mechanical Room				240,000				
				Field Cost - Waterways				10,920,000				
		160		Pumps and Prime Movers					1,150,000			
				Mechanical Building - Equipment								
			1	Backwash Pump, 8960 gpm	2	ea	90,000.00	180,000				
			2	125 HP VFD, custom engineered	2	ea	30,000.00	60,000				
			3	Installation, +/- 30% of above	1	ls	72,000.00	72,000				
			4	Feed Pumps, 844 gpm	2	ea	25,000.00	50,000				
			5	Installation, +/- 30% of above	1	ls	15,000.00	15,000				
			6	Nutrient Pumps, 5 gpm	1	ea	7,500.00	7,500				
			7	Installation, +/- 30% of above	1	ls	2,250.00	2,250				
			8	Recycle Pumps, 350 gpm	16	ea	12,500.00	200,000				
			9	Installation, +/- 30% of above	1	ls	60,000.00	60,000				

CONSTRUCTION COST ESTIMATE

PROJECT: Central Valley Project	PREPARED BY: Regional Office, Sacramento, CA
DIVISION: West San Joaquin Division	ESTIMATE DATE: July 2007 (Revised after DEC)
UNIT: San Luis Unit -- Drainage System -- Westlands Water District-Central	ESTIMATE TYPE: Feasibility
FEATURE: Drainage Feature Re-Evaluation Feasibility Study	PRICE LEVEL: April 2006

PROPERTY CLASS	IDENTIFIED PROPERTY	PLANT ACCOUNT	ITEM	DESCRIPTION	QUANTITY	UNIT	PRICE	AMOUNT	FIELD COST	TOTAL FIELD COST	NONCONTRACT COST	CONSTRUCTION COST
12	03			WWD CENTRAL Se BIOTREATMENT PLANT (continued)								
		160		Pumps and Prime Movers (continued)								
			10	Clarifier Sludge/Decant Pump, 300 gpm	1	ea	20,000.00	20,000				
			11	5 HP VFD, custom engineered	1	ea	7,000.00	7,000				
			12	Installation, +/- 30% of above	1	ls	8,100.00	8,100				
			13	Drain Pumps, duplex submersible package w/ control panel	2	ea	20,000.00	40,000				
			14	Installation, +/- 30% of above	1	ls	12,000.00	12,000				
			15	Mobilization (+/- 5%)				36,693				
			16	Unlisted Items (+/- 15%)				115,581				
			17	Allowance for Procurement Strategy (+/- 5%)				43,876				
				Subtotal				930,000				
				Contingencies (+/- 25%)				220,000				
				Field Cost - Pumps and Prime Movers				1,150,000				
		170		Accessory Electrical Equipment					430,000			
				Electrical, associated with process mechanical								
			1	MCCs, VFDs, and Distribution Panels, per supplier quote	1	ls	150,000.00	150,000				
			2	Inst of elec eq incl terminations, tax, sbcntrctr OH&P, +/- 50% of above	1	ls	75,000.00	75,000				
			3	Mechanical Bldg conduit to process motors	540	lf	25.00	13,500				
			4	Pipe Gallery, conduit to process motors	240	lf	25.00	6,000				
			5	Solids Process Building, conduit to motors	150	lf	25.00	3,750				
			6	Yard conduit	1,000	lf	25.00	25,000				
			7	Mobilization (+/- 5%)				13,663				
			8	Unlisted Items (+/- 15%)				43,037				
			9	Allowance for Procurement Strategy (+/- 5%)				20,051				
				Subtotal				350,000				
				Contingencies (+/- 25%)				80,000				
				Field Cost - Accessory Electrical Equipment				430,000				

CONSTRUCTION COST ESTIMATE

PROJECT: Central Valley Project	PREPARED BY: Regional Office, Sacramento, CA
DIVISION: West San Joaquin Division	ESTIMATE DATE: July 2007 (Revised after DEC)
UNIT: San Luis Unit -- Drainage System -- Westlands Water District-Central	ESTIMATE TYPE: Feasibility
FEATURE: Drainage Feature Re-Evaluation Feasibility Study	PRICE LEVEL: April 2006

PROPERTY CLASS	IDENTIFIED PROPERTY	PLANT ACCOUNT	ITEM	DESCRIPTION	QUANTITY	UNIT	PRICE	AMOUNT	FIELD COST	TOTAL FIELD COST	NONCONTRACT COST	CONSTRUCTION COST
12	03			WWD CENTRAL Se BIOTREATMENT PLANT (continued)								
		180		Installed Supervisory Control Equipment					830,000			
			1	System Design	1	ls	22,500.00	22,500				
				Conduit and Wire, per pair of two trainsl (all 1") - installed								
			2	Flex cndt, from ea device to J box, I&C power (1 point ea)	1,600	lf	25.00	40,000				
			3	Flex cndt, from ea device to J box, signal (1 point ea)	1,600	lf	25.00	40,000				
			4	Rgd cndt, from ea device to J box, I&C power (4 pts/cmn. conduit)	1,600	lf	25.00	40,000				
			5	Rgd cndt, from ea device to J box, signal (4 pts/common conduit)	1,600	lf	25.00	40,000				
				Conduit and Wire, trunk lines - gallery to control room (all 2")								
			6	Rigid conduit, I&C power	150	lf	25.00	3,750				
			7	Rigid conduit, signal	150	lf	25.00	3,750				
				Conduit and Wire, Mechanical Room (all 1" assumed) all installed								
			8	Flex cndt, from ea device to jnctn box, I&C power (1 pnt ea)	500	lf	25.00	12,500				
			9	Flex cndt, from ea device to jnctn box, signal (1 pnt ea)	500	lf	25.00	12,500				
			10	Rigid conduit, I&C power	500	lf	25.00	12,500				
			11	Rigid conduit, signal	500	lf	25.00	12,500				
			12	Rigid conduit, I&C power trunk	60	lf	25.00	1,500				
			13	Rigid conduit, signal trunk mech bldg	60	lf	25.00	1,500				
			14	Rigid conduit, signal trunk solids dewatering	150	lf	25.00	3,750				
			15	PLC Cabinet (dual proc's, 6' panel, 10" Color HMI, batt bckp), inst	1	ea	110,000.00	110,000				
			16	Remote I/O Racks, installed	1	ea	22,500.00	22,500				
			17	Desktop PC and Switch in Admin Bldg	1	ea	12,000.00	12,000				
			18	Terminations	70	hr	120.00	8,400				
				Testing (team of two tech's)								
			19	Continuity Testing	110	hr	120.00	13,200				
			20	Loop Testing	80	hr	120.00	9,600				
			21	Signal Conditioning and tagging	80	hr	120.00	9,600				
			22	Programming (Allocation)	1	ls	90,000.00	90,000				

CONSTRUCTION COST ESTIMATE

PROJECT: Central Valley Project	PREPARED BY: Regional Office, Sacramento, CA
DIVISION: West San Joaquin Division	ESTIMATE DATE: July 2007 (Revised after DEC)
UNIT: San Luis Unit -- Drainage System -- Westlands Water District-Central	ESTIMATE TYPE: Feasibility
FEATURE: Drainage Feature Re-Evaluation Feasibility Study	PRICE LEVEL: April 2006

PROPERTY CLASS	IDENTIFIED PROPERTY	PLANT ACCOUNT	ITEM	DESCRIPTION	QUANTITY	UNIT	PRICE	AMOUNT	FIELD COST	TOTAL FIELD COST	NONCONTRACT COST	CONSTRUCTION COST
12	03			WWD CENTRAL Se BIOTREATMENT PLANT (continued)								
		180		Installed Supervisory Control Equipment (continued)								
			23	Mobilization (+/- 5%)				26,103				
			24	Unlisted Items (+/- 15%)				82,223				
			25	Allowance for Procurement Strategy (+/- 5%)				29,625				
				Subtotal				660,000				
				Contingencies (+/- 25%)				170,000				
				Field Cost - Installed Supervisory Control Equipment				830,000				
				FACILITATING SERVICES (2%)								
				INVESTIGATIONS (3%)								
				DESIGNS & SPECIFICATIONS (10%)								
				CONSTRUCTION SUPERVISION (12%)								
				OTHER COSTS (+/- 27%)							8,825,000	

CONSTRUCTION COST ESTIMATE

PROJECT: Central Valley Project	PREPARED BY: Regional Office, Sacramento, CA
DIVISION: West San Joaquin Division	ESTIMATE DATE: July 2007 (Revised after DEC)
UNIT: San Luis Unit -- Drainage System -- Westlands Water District-Central	ESTIMATE TYPE: Feasibility
FEATURE: Drainage Feature Re-Evaluation Feasibility Study	PRICE LEVEL: April 2006

PROPERTY CLASS	IDENTIFIED PROPERTY	PLANT ACCOUNT	ITEM	DESCRIPTION	QUANTITY	UNIT	PRICE	AMOUNT	FIELD COST	TOTAL FIELD COST	NONCONTRACT COST	CONSTRUCTION COST
12	04			WWD CENTRAL - EVAPORATION PONDS - Ponds will occupy a total						143,372,000	35,628,000	179,000,000
				area of 599 acres. There will be one terminal cell initially, with new								
				terminal cells to follow in 12.5, 25, and 37.5 years respectfully.								
				(1) INITIAL POND CONSTRUCTION						112,142,000	27,858,000	140,000,000
		100		Land and Rights					2,600,000			
			1	Undeveloped Land - Fee	39	Ac	2,100.00	81,900				
			2	Seasonal Crop Land - Fee	550	Ac	4,000.00	2,200,000				
			3	Mixed Built Land - Fee	10	Ac	15,500.00	155,000				
			4	Unlisted Items (+/- 5%)				2,218,100				
				Subtotal				2,300,000				
				Contingencies (+/- 15%)				300,000				
				Field Cost - Land and Rights				2,600,000				
		130		Structures and Improvements					6,000,000			
				General Site Preparation								
			1	Removal of gravel/dirt roadway 24'x3'x15,400'; spread waste on site	42,000	cy	3.00	126,000				
			2	Fill in ditch/canal (assume 20'x8'x8,000'), use existing bank material	47,400	cy	3.00	142,200				
			3	Chain link - 6ft w/3 strands barbed wire	20,500	lf	30.00	615,000				
			4	Gates - 20 ft wide	4	ea	1,550.00	6,200				
				Steel Maintenance Building								
			5	Concrete foundation slab - 20'x40'x2	60	cy	1,000.00	60,000				
			6	Type V cement	20	ton	170.00	3,400				
			7	Reinforcement	9,000	lb	1.75	15,750				
			8	Pre-fab 800sf steel building	1	ea	27,000.00	27,000				
				Monitoring Well:								
			9	Furnish and Install Monitoring Wells - D=2"; Depth=60', encased	11	ea	7,000.00	77,000				
				Perimeter Drains:								
			10	Excavation for interceptor trench - 2'x7'x41,000'	21,300	cy	4.50	95,850				
			11	F&I Sand filter material (26 mile haul)	15,200	cy	60.00	912,000				
			12	F&I Gravel drain material (26 mile haul) - 4 sf /ft for 8" drain pipe	6,100	cy	70.00	427,000				
			13	F&I 8" dia PVC slotted drain pipe	41,000	lf	20.00	820,000				
			14	Excavation for waste trench	21,300	cy	3.00	63,900				

CONSTRUCTION COST ESTIMATE

PROJECT: Central Valley Project	PREPARED BY: Regional Office, Sacramento, CA
DIVISION: West San Joaquin Division	ESTIMATE DATE: July 2007 (Revised after DEC)
UNIT: San Luis Unit -- Drainage System -- Westlands Water District-Central	ESTIMATE TYPE: Feasibility
FEATURE: Drainage Feature Re-Evaluation Feasibility Study	PRICE LEVEL: April 2006

PROPERTY CLASS	IDENTIFIED PROPERTY	PLANT ACCOUNT	ITEM	DESCRIPTION	QUANTITY	UNIT	PRICE	AMOUNT	FIELD COST	TOTAL FIELD COST	NONCONTRACT COST	CONSTRUCTION COST
12	04			WWD CENTRAL - EVAPORATION PONDS (continued)								
				(1) INITIAL POND CONSTRUCTION (continued)								
		130		Structures and Improvements (continued)								
			15	Inspection/Cleanout/Sump Manhole - D=5'xH=8' - FRP preformed	40	ea	10,000.00	400,000				
			16	Inspection/Cleanout/Sump Manhole - D=5'xH=12' - FRP preformed	41	ea	12,000.00	492,000				
			17	Return Flow Pump - D=4"; TDH=20'; w/ auto on/off	60	ea	500.00	30,000				
			18	Mobilization (+/- 5%)				215,665				
			19	Unlisted Items (+/- 10%)				471,035				
				Subtotal				5,000,000				
				Contingencies (+/- 20%)				1,000,000				
				Field Cost - Structures and Improvements				6,000,000				
		150		Reservoirs					31,000,000			
				Liners for Concentration Cells								
				Furnish and Install Geomembrane Liner - 1,700,000 SY								
			1	F&I 40 mil thick LDPE liner - 1,700,000 SY	1,700,000	sy	6.50	11,050,000				
			2	Excavation - Top 20" and stockpile	910,000	cy	3.00	2,730,000				
			3	Prep surface for LDPE liner	1,700,000	sy	0.15	255,000				
			4	Place from stockpile and compact (10% Loss)	819,000	cy	10.00	8,190,000				
			5	Mobilization (+/- 5%)				1,111,250				
			6	Unlisted Items (+/- 10%)				2,663,750				
				Subtotal				26,000,000				
				Contingencies (+/- 20%)				5,000,000				
				Field Cost - Reservoirs				31,000,000				

CONSTRUCTION COST ESTIMATE

PROJECT: Central Valley Project	PREPARED BY: Regional Office, Sacramento, CA
DIVISION: West San Joaquin Division	ESTIMATE DATE: July 2007 (Revised after DEC)
UNIT: San Luis Unit -- Drainage System -- Westlands Water District-Central	ESTIMATE TYPE: Feasibility
FEATURE: Drainage Feature Re-Evaluation Feasibility Study	PRICE LEVEL: April 2006

PROPERTY CLASS	IDENTIFIED PROPERTY	PLANT ACCOUNT	ITEM	DESCRIPTION	QUANTITY	UNIT	PRICE	AMOUNT	FIELD COST	TOTAL FIELD COST	NONCONTRACT COST	CONSTRUCTION COST
12	04			WWD CENTRAL - EVAPORATION PONDS (continued)								
				(1) INITIAL POND CONSTRUCTION (continued)								
		152		Waterways					69,000,000			
				Sheetpile Embankment Dikes (includes 1 terminal cell):								
			1	Perimeter walls, 20,150'x20' long, furnish and drive 10 ft	403,000	sf	16.00	6,448,000				
			2	Interior walls, 41,750'x20' long, furnish and drive 10 ft	835,000	sf	16.00	13,360,000				
			3	Compacted embankment, furnish and place	1,385,000	cy	15.00	20,775,000				
			4	Scarify footprint (12" disc)	182,300	sy	1.00	182,300				
			5	Excavate compacted embankment	672,900	cy	10.00	6,729,000				
			6	Waste on site	672,900	cy	3.00	2,018,700				
			7	Mobilization (+/- 5%)				2,475,650				
			8	Unlisted Items (+/- 10%)				5,011,350				
				Subtotal				57,000,000				
				Contingencies (+/- 20%)				12,000,000				
				Field Cost - Waterways				69,000,000				
		153		Waterway Structures					3,500,000			
				Gate Structure (22 ea)								
			1	Reinforced Concrete 81 CY each gate	1,785	cy	1,000.00	1,785,000				
			2	Cast in place - type V cement	590	ton	170.00	100,300				
			3	Epoxy coated reinforcement assumed	268,000	lb	2.00	536,000				
			4	Stoplogs - 1 set = 4 stoplogs, Avg 2.5ft x 12ft x 4in	88	set	1,000.00	88,000				
				Furnish and Lay the following smooth double wall HDPE Pipe:								
			5	24 in dia. - 20 ft long	22	ea	1,500.00	33,000				

CONSTRUCTION COST ESTIMATE

PROJECT: Central Valley Project	PREPARED BY: Regional Office, Sacramento, CA
DIVISION: West San Joaquin Division	ESTIMATE DATE: July 2007 (Revised after DEC)
UNIT: San Luis Unit -- Drainage System -- Westlands Water District-Central	ESTIMATE TYPE: Feasibility
FEATURE: Drainage Feature Re-Evaluation Feasibility Study	PRICE LEVEL: April 2006

PROPERTY CLASS	IDENTIFIED PROPERTY	PLANT ACCOUNT	ITEM	DESCRIPTION	QUANTITY	UNIT	PRICE	AMOUNT	FIELD COST	TOTAL FIELD COST	NONCONTRACT COST	CONSTRUCTION COST
12	04			WWD CENTRAL - EVAPORATION PONDS (continued)								
				(1) INITIAL POND CONSTRUCTION (continued)								
		153		Waterway Structures (continued)								
			6	Mobilization (+/- 5%)				127,115				
			7	Unlisted Items (+/- 10%)				230,585				
				Subtotal				2,900,000				
				Contingencies (+/- 20%)				600,000				
				Field Cost - Waterway Structures				3,500,000				
		199		Miscellaneous Installed Equipment					42,000			
			1	Mobile Emergency Pump - THD=20'; pump & hose mobile-on skids	2	ea	15,000.00	30,000				
			2	Mobilization (+/- 5%)				1,500				
			3	Unlisted Items (+/- 10%)				3,500				
				Subtotal				35,000				
				Contingencies (+/- 20%)				7,000				
				Field Cost - Miscellaneous Installed Equipment				42,000				
				FACILITATING SERVICES (2%)								
				INVESTIGATIONS (3%)								
				DESIGNS & SPECIFICATIONS (10%)								
				CONSTRUCTION SUPERVISION (12%)								
				OTHER COSTS (+/- 27%)							27,858,000	

CONSTRUCTION COST ESTIMATE

PROJECT: Central Valley Project	PREPARED BY: Regional Office, Sacramento, CA
DIVISION: West San Joaquin Division	ESTIMATE DATE: July 2007 (Revised after DEC)
UNIT: San Luis Unit -- Drainage System -- Westlands Water District-Central	ESTIMATE TYPE: Feasibility
FEATURE: Drainage Feature Re-Evaluation Feasibility Study	PRICE LEVEL: April 2006

PROPERTY CLASS	IDENTIFIED PROPERTY	PLANT ACCOUNT	ITEM	DESCRIPTION	QUANTITY	UNIT	PRICE	AMOUNT	FIELD COST	TOTAL FIELD COST	NONCONTRACT COST	CONSTRUCTION COST
12	04			WWD CENTRAL - EVAPORATION PONDS (continued)								
				(2) FUTURE ADDITIONAL TERMINAL CELL - 12.5 YEARS LATER						10,410,000	2,590,000	13,000,000
		100		Land and Rights								
				Costs of Land and Rights have been included with Initial Construction.								
		130		Structures and Improvements					310,000			
				Perimeter Drains:								
			1	Excavation for interceptor trench - 2'x7'x3400'	1,750	cy	4.50	7,875				
			2	F&I Sand filter material (26 mile haul)	1,250	cy	60.00	75,000				
			3	F&I Gravel drain material (26 mile haul) - 4 sf /ft for 8" drain pipe	500	cy	70.00	35,000				
			4	F&I 8" dia PVC slotted drain pipe	3,400	lf	20.00	68,000				
			5	Excavation for waste trench	1,750	cy	3.00	5,250				
			6	Inspection/Cleanout Manhole - D=5'xH=8' - FRP preformed	3	ea	10,000.00	30,000				
			7	Return Flow Pump - D=4"; TDH=20'; w/ auto on/off	3	ea	500.00	1,500				
			8	Mobilization (+/- 5%)				11,131				
			9	Unlisted Items (+/- 10%)				26,244				
				Subtotal				260,000				
				Contingencies (+/- 20%)				50,000				
				Field Cost - Structures and Improvements				310,000				
		150		Reservoirs					4,800,000			
				Liners for Concentration Cells								
				Furnish and Install Geomembrane Liner - 259,000 SY								
			1	F&I 40 mil thick LDPE liner - 259,000 SY	259,000	sy	6.50	1,683,500				
			2	Excavation - Top 20" and stockpile	143,500	cy	3.00	430,500				
			3	Prep surface for LDPE liner	259,000	sy	0.15	38,850				
			4	Place from stockpile and compact (10% Loss)	129,300	cy	10.00	1,293,000				
			5	Mobilization (+/- 5%)				172,293				

CONSTRUCTION COST ESTIMATE

PROJECT: Central Valley Project	PREPARED BY: Regional Office, Sacramento, CA
DIVISION: West San Joaquin Division	ESTIMATE DATE: July 2007 (Revised after DEC)
UNIT: San Luis Unit -- Drainage System -- Westlands Water District-Central	ESTIMATE TYPE: Feasibility
FEATURE: Drainage Feature Re-Evaluation Feasibility Study	PRICE LEVEL: April 2006

PROPERTY CLASS	IDENTIFIED PROPERTY	PLANT ACCOUNT	ITEM	DESCRIPTION	QUANTITY	UNIT	PRICE	AMOUNT	FIELD COST	TOTAL FIELD COST	NONCONTRACT COST	CONSTRUCTION COST
12	04			WWD CENTRAL - EVAPORATION PONDS (continued)								
				(2) FUTURE ADDITIONAL TERMINAL CELL - 12.5 YEARS (continued)								
		150		Reservoirs (continued)								
			6	Unlisted Items (+/- 10%)				381,858				
				Subtotal				4,000,000				
				Contingencies (+/- 20%)				800,000				
				Field Cost - Reservoirs				4,800,000				
		152		Waterways					5,300,000			
				Sheetpile Embankment Dikes for one additional terminal cell:								
			1	Perimeter walls, 3,400'x20' long, furnish and drive 10 ft	68,000	sf	16.00	1,088,000				
			2	Compacted embankment, furnish and place	127,000	cy	15.00	1,905,000				
			3	Scarify footprint (12" disc)	15,120	sy	1.00	15,120				
			4	Excavate compacted embankment	62,400	cy	10.00	624,000				
			5	Waste on site	62,400	cy	3.00	187,200				
			6	Mobilization (+/- 5%)				190,966				
			7	Unlisted Items (+/- 10%)				389,714				
				Subtotal				4,400,000				
				Contingencies (+/- 20%)				900,000				
				Field Cost - Waterways				5,300,000				
				FACILITATING SERVICES (2%)								
				INVESTIGATIONS (3%)								
				DESIGNS & SPECIFICATIONS (10%)								
				CONSTRUCTION SUPERVISION (12%)								
				OTHER COSTS (+/- 27%)							2,590,000	

CONSTRUCTION COST ESTIMATE

PROJECT: Central Valley Project	PREPARED BY: Regional Office, Sacramento, CA
DIVISION: West San Joaquin Division	ESTIMATE DATE: July 2007 (Revised after DEC)
UNIT: San Luis Unit -- Drainage System -- Westlands Water District-Central	ESTIMATE TYPE: Feasibility
FEATURE: Drainage Feature Re-Evaluation Feasibility Study	PRICE LEVEL: April 2006

PROPERTY CLASS	IDENTIFIED PROPERTY	PLANT ACCOUNT	ITEM	DESCRIPTION	QUANTITY	UNIT	PRICE	AMOUNT	FIELD COST	TOTAL FIELD COST	NONCONTRACT COST	CONSTRUCTION COST
12	04			WWD CENTRAL - EVAPORATION PONDS (continued)								
				(3) FUTURE ADDITIONAL TERMINAL CELL - 25 YEARS LATER						10,410,000	2,590,000	13,000,000
		100		Land and Rights								
				Costs of Land and Rights have been included with Initial Construction.								
		130		Structures and Improvements					310,000			
				Perimeter Drains:								
			1	Excavation for interceptor trench - 2'x7'x3400'	1,750	cy	4.50	7,875				
			2	F&I Sand filter material (26 mile haul)	1,250	cy	60.00	75,000				
			3	F&I Gravel drain material (26 mile haul) - 4 sf /ft for 8" drain pipe	500	cy	70.00	35,000				
			4	F&I 8" dia PVC slotted drain pipe	3,400	lf	20.00	68,000				
			5	Excavation for waste trench	1,750	cy	3.00	5,250				
			6	Inspection/Cleanout Manhole - D=5'xH=8' - FRP preformed	3	ea	10,000.00	30,000				
			7	Return Flow Pump - D=4"; TDH=20'; w/ auto on/off	3	ea	500.00	1,500				
			8	Mobilization (+/- 5%)				11,131				
			9	Unlisted Items (+/- 10%)				26,244				
				Subtotal				260,000				
				Contingencies (+/- 20%)				50,000				
				Field Cost - Structures and Improvements				310,000				
		150		Reservoirs					4,800,000			
				Liners for Concentration Cells								
				Furnish and Install Geomembrane Liner - 259,000 SY								
			1	F&I 40 mil thick LDPE liner - 259,000 SY	259,000	sy	6.50	1,683,500				
			2	Excavation - Top 20" and stockpile	143,500	cy	3.00	430,500				
			3	Prep surface for LDPE liner	259,000	sy	0.15	38,850				
			4	Place from stockpile and compact (10% Loss)	129,300	cy	10.00	1,293,000				
			5	Mobilization (+/- 5%)				172,293				

CONSTRUCTION COST ESTIMATE

PROJECT: Central Valley Project	PREPARED BY: Regional Office, Sacramento, CA
DIVISION: West San Joaquin Division	ESTIMATE DATE: July 2007 (Revised after DEC)
UNIT: San Luis Unit -- Drainage System -- Westlands Water District-Central	ESTIMATE TYPE: Feasibility
FEATURE: Drainage Feature Re-Evaluation Feasibility Study	PRICE LEVEL: April 2006

PROPERTY CLASS	IDENTIFIED PROPERTY	PLANT ACCOUNT	ITEM	DESCRIPTION	QUANTITY	UNIT	PRICE	AMOUNT	FIELD COST	TOTAL FIELD COST	NONCONTRACT COST	CONSTRUCTION COST
12	04			WWD CENTRAL - EVAPORATION PONDS (continued)								
				(3) FUTURE ADDITIONAL TERMINAL CELL - 25 YEARS (continued)								
		150		Reservoirs (continued)								
			6	Unlisted Items (+/- 10%)				381,858				
				Subtotal				4,000,000				
				Contingencies (+/- 20%)				800,000				
				Field Cost - Reservoirs				4,800,000				
		152		Waterways					5,300,000			
				Sheetpile Embankment Dikes for one additional terminal cell:								
			1	Perimeter walls, 3,400'x20' long, furnish and drive 10 ft	68,000	sf	16.00	1,088,000				
			2	Compacted embankment, furnish and place	127,000	cy	15.00	1,905,000				
			3	Scarify footprint (12" disc)	15,120	sy	1.00	15,120				
			4	Excavate compacted embankment	62,400	cy	10.00	624,000				
			5	Waste on site	62,400	cy	3.00	187,200				
			6	Mobilization (+/- 5%)				190,966				
			7	Unlisted Items (+/- 10%)				389,714				
				Subtotal				4,400,000				
				Contingencies (+/- 20%)				900,000				
				Field Cost - Waterways				5,300,000				
				FACILITATING SERVICES (2%)								
				INVESTIGATIONS (3%)								
				DESIGNS & SPECIFICATIONS (10%)								
				CONSTRUCTION SUPERVISION (12%)								
				OTHER COSTS (+/- 27%)							2,590,000	

CONSTRUCTION COST ESTIMATE

PROJECT: Central Valley Project	PREPARED BY: Regional Office, Sacramento, CA
DIVISION: West San Joaquin Division	ESTIMATE DATE: July 2007 (Revised after DEC)
UNIT: San Luis Unit -- Drainage System -- Westlands Water District-Central	ESTIMATE TYPE: Feasibility
FEATURE: Drainage Feature Re-Evaluation Feasibility Study	PRICE LEVEL: April 2006

PROPERTY CLASS	IDENTIFIED PROPERTY	PLANT ACCOUNT	ITEM	DESCRIPTION	QUANTITY	UNIT	PRICE	AMOUNT	FIELD COST	TOTAL FIELD COST	NONCONTRACT COST	CONSTRUCTION COST
12	04			WWD CENTRAL - EVAPORATION PONDS (continued)								
				(4) FUTURE ADDITIONAL TERMINAL CELL - 37.5 YEARS LATER						10,410,000	2,590,000	13,000,000
		100		Land and Rights								
				Costs of Land and Rights have been included with Initial Construction.								
		130		Structures and Improvements					310,000			
				Perimeter Drains:								
			1	Excavation for interceptor trench - 2'x7'x3400'	1,750	cy	4.50	7,875				
			2	F&I Sand filter material (26 mile haul)	1,250	cy	60.00	75,000				
			3	F&I Gravel drain material (26 mile haul) - 4 sf /ft for 8" drain pipe	500	cy	70.00	35,000				
			4	F&I 8" dia PVC slotted drain pipe	3,400	lf	20.00	68,000				
			5	Excavation for waste trench	1,750	cy	3.00	5,250				
			6	Inspection/Cleanout Manhole - D=5'xH=8' - FRP preformed	3	ea	10,000.00	30,000				
			7	Return Flow Pump - D=4"; TDH=20'; w/ auto on/off	3	ea	500.00	1,500				
			8	Mobilization (+/- 5%)				11,131				
			9	Unlisted Items (+/- 10%)				26,244				
				Subtotal				260,000				
				Contingencies (+/- 20%)				50,000				
				Field Cost - Structures and Improvements				310,000				
		150		Reservoirs					4,800,000			
				Liners for Concentration Cells								
				Furnish and Install Geomembrane Liner - 259,000 SY								
			1	F&I 40 mil thick LDPE liner - 259,000 SY	259,000	sy	6.50	1,683,500				
			2	Excavation - Top 20" and stockpile	143,500	cy	3.00	430,500				
			3	Prep surface for LDPE liner	259,000	sy	0.15	38,850				
			4	Place from stockpile and compact (10% Loss)	129,300	cy	10.00	1,293,000				
			5	Mobilization (+/- 5%)				172,293				

CONSTRUCTION COST ESTIMATE

PROJECT: Central Valley Project	PREPARED BY: Regional Office, Sacramento, CA
DIVISION: West San Joaquin Division	ESTIMATE DATE: July 2007 (Revised after DEC)
UNIT: San Luis Unit -- Drainage System -- Westlands Water District-Central	ESTIMATE TYPE: Feasibility
FEATURE: Drainage Feature Re-Evaluation Feasibility Study	PRICE LEVEL: April 2006

PROPERTY CLASS	IDENTIFIED PROPERTY	PLANT ACCOUNT	ITEM	DESCRIPTION	QUANTITY	UNIT	PRICE	AMOUNT	FIELD COST	TOTAL FIELD COST	NONCONTRACT COST	CONSTRUCTION COST
12	04			WWD CENTRAL - EVAPORATION PONDS (continued)								
				(4) FUTURE ADDITIONAL TERMINAL CELL - 37.5 YEARS (continued)								
		150		Reservoirs (continued)								
			6	Unlisted Items (+/- 10%)				381,858				
				Subtotal				4,000,000				
				Contingencies (+/- 20%)				800,000				
				Field Cost - Reservoirs				4,800,000				
		152		Waterways					5,300,000			
				Sheetpile Embankment Dikes for one additional terminal cell:								
			1	Perimeter walls, 3,400'x20' long, furnish and drive 10 ft	68,000	sf	16.00	1,088,000				
			2	Compacted embankment, furnish and place	127,000	cy	15.00	1,905,000				
			3	Scarify footprint (12" disc)	15,120	sy	1.00	15,120				
			4	Excavate compacted embankment	62,400	cy	10.00	624,000				
			5	Waste on site	62,400	cy	3.00	187,200				
			6	Mobilization (+/- 5%)				190,966				
			7	Unlisted Items (+/- 10%)				389,714				
				Subtotal				4,400,000				
				Contingencies (+/- 20%)				900,000				
				Field Cost - Waterways				5,300,000				
				FACILITATING SERVICES (2%)								
				INVESTIGATIONS (3%)								
				DESIGNS & SPECIFICATIONS (10%)								
				CONSTRUCTION SUPERVISION (12%)								
				OTHER COSTS (+/- 27%)							2,590,000	

CONSTRUCTION COST ESTIMATE

PROJECT: Central Valley Project	PREPARED BY: Regional Office, Sacramento, CA
DIVISION: West San Joaquin Division	ESTIMATE DATE: July 2007 (Revised after DEC)
UNIT: San Luis Unit -- Drainage System -- Westlands Water District-Central	ESTIMATE TYPE: Feasibility
FEATURE: Drainage Feature Re-Evaluation Feasibility Study	PRICE LEVEL: April 2006

PROPERTY CLASS	IDENTIFIED PROPERTY	PLANT ACCOUNT	ITEM	DESCRIPTION	QUANTITY	UNIT	PRICE	AMOUNT	FIELD COST	TOTAL FIELD COST	NONCONTRACT COST	CONSTRUCTION COST
12	05			MITIGATION - Three types of habitat take up 2.392 80-acre sites.						12,420,000	3,580,000	16,000,000
				These include alternative habitat-shallow water, compensation habitat-								
				shallow water, and compensation habitat-deep water. Materials used								
				include pumps, weirs, and HDPE pipe.								
				80-Acre Unit Mitigation Features - For the breakdown of costs for					11,500,000			
				these units, see the itemized cost list in the Appendix to this estimate.								
				(1) Alternative Habitat -- Shallow Water -- Field Cost	1.582	ea	2,900,000.00	4,588,888				
				(2) Compensation Habitat -- Shallow Water -- Field Cost	0.114	ea	2,333,000.00	265,670				
				(3) Compensation Habitat -- Deep Water -- Field Cost	0.696	ea	5,200,000.00	3,620,500				
				(4) Appurtenant Facilities -- Field Cost	2.393	ea	1,210,000.00	2,894,925				
				Rounding				130,017				
				Field Cost - 80-Acre Unit Mitigation Features				11,500,000				
		100		Land and Rights					920,000			
			1	Fees - Alternative Habitat-Shallow Water	126.59	Ac	4,000.00	506,360				
			2	Fees - Compensation Habitat-Shallow Water	9.11	Ac	4,000.00	36,440				
			3	Fees - Compensation Habitat-Deep Water	55.70	Ac	4,000.00	222,800				
			4	Unlisted Items (+/- 5%)				34,400				
				Subtotal				800,000				
				Contingencies (+/- 15%)				120,000				
				Field Cost - Land and Rights				920,000				
				FACILITATING SERVICES (2%)								
				INVESTIGATIONS (3%)								
				DESIGNS & SPECIFICATIONS (10%)								
				CONSTRUCTION SUPERVISION (12%)								
				OTHER COSTS (+/- 27%)							3,580,000	

CONSTRUCTION COST ESTIMATE

PROJECT: Central Valley Project	PREPARED BY: Regional Office, Sacramento, CA
DIVISION: West San Joaquin Division	ESTIMATE DATE: July 2007 (Revised after DEC)
UNIT: San Luis Unit -- Drainage System -- Westlands Water District-Central	ESTIMATE TYPE: Feasibility
FEATURE: Drainage Feature Re-Evaluation Feasibility Study	PRICE LEVEL: April 2006

PROPERTY CLASS	IDENTIFIED PROPERTY	PLANT ACCOUNT	ITEM	DESCRIPTION	QUANTITY	UNIT	PRICE	AMOUNT	FIELD COST	TOTAL FIELD COST	NONCONTRACT COST	CONSTRUCTION COST
13				TRANSMISSION LINES						395,000	110,000	505,000
	01			REUSE AREA D TRANSMISSION LINE - A 12kV power service drop						29,000	8,000	37,000
				from the existing transmission line on W Mount Whitney Avenue to the								
				vicinity of Pumping Plant D.								
		182		Poles & Overhead Conductors					29,000			
			1	Service Poles, Transformer, Disconnect, & Meter	1	ea	20,000.00	20,000				
			2	Mobilization (+/- 5%)				1,000				
			3	Unlisted Items (+/- 15%)				3,000				
				Subtotal				24,000				
				Contingencies (+/- 20%)				5,000				
				Field Cost - Poles & Overhead Conductors				29,000				
				FACILITATING SERVICES (2%)								
				INVESTIGATIONS (3%)								
				DESIGNS & SPECIFICATIONS (10%)								
				CONSTRUCTION SUPERVISION (12%)								
				OTHER COSTS (+/- 27%)							8,000	

CONSTRUCTION COST ESTIMATE

PROJECT: Central Valley Project	PREPARED BY: Regional Office, Sacramento, CA
DIVISION: West San Joaquin Division	ESTIMATE DATE: July 2007 (Revised after DEC)
UNIT: San Luis Unit -- Drainage System -- Westlands Water District-Central	ESTIMATE TYPE: Feasibility
FEATURE: Drainage Feature Re-Evaluation Feasibility Study	PRICE LEVEL: April 2006

PROPERTY CLASS	IDENTIFIED PROPERTY	PLANT ACCOUNT	ITEM	DESCRIPTION	QUANTITY	UNIT	PRICE	AMOUNT	FIELD COST	TOTAL FIELD COST	NONCONTRACT COST	CONSTRUCTION COST
13	02			REUSE AREA E TRANSMISSION LINE - A 12kV power service drop						29,000	8,000	37,000
				from the existing transmission line on W Excelsior Avenue to the								
				vicinity of Pumping Plant E.								
		182		Poles & Overhead Conductors					29,000			
			1	Service Poles, Transformer, Disconnect, & Meter	1	ea	20,000.00	20,000				
			2	Mobilization (+/- 5%)				1,000				
			3	Unlisted Items (+/- 15%)				3,000				
				Subtotal				24,000				
				Contingencies (+/- 20%)				5,000				
				Field Cost - Poles & Overhead Conductors				29,000				
				FACILITATING SERVICES (2%)								
				INVESTIGATIONS (3%)								
				DESIGNS & SPECIFICATIONS (10%)								
				CONSTRUCTION SUPERVISION (12%)								
				OTHER COSTS (+/- 27%)							8,000	

CONSTRUCTION COST ESTIMATE

PROJECT: Central Valley Project	PREPARED BY: Regional Office, Sacramento, CA
DIVISION: West San Joaquin Division	ESTIMATE DATE: July 2007 (Revised after DEC)
UNIT: San Luis Unit -- Drainage System -- Westlands Water District-Central	ESTIMATE TYPE: Feasibility
FEATURE: Drainage Feature Re-Evaluation Feasibility Study	PRICE LEVEL: April 2006

PROPERTY CLASS	IDENTIFIED PROPERTY	PLANT ACCOUNT	ITEM	DESCRIPTION	QUANTITY	UNIT	PRICE	AMOUNT	FIELD COST	TOTAL FIELD COST	NONCONTRACT COST	CONSTRUCTION COST
13	03			REUSE AREA F TRANSMISSION LINE - A 12kV, wood pole						250,000	70,000	320,000
				transmission line, extending 1 mile from the existing power line on								
				W Paige and S El Dorado Avenues to the vicinity of Pumping Plant F.								
		182		Poles & Overhead Conductors					250,000			
			1	Wood Pole Transmission Line	1	mi	150,000.00	150,000				
			2	Service Poles, Transformer, Disconnect, & Meter	1	ea	20,000.00	20,000				
			3	Mobilization (+/- 5%)				8,500				
			4	Unlisted Items (+/- 15%)				31,500				
				Subtotal				210,000				
				Contingencies (+/- 20%)				40,000				
				Field Cost - Poles & Overhead Conductors				250,000				
				FACILITATING SERVICES (2%)								
				INVESTIGATIONS (3%)								
				DESIGNS & SPECIFICATIONS (10%)								
				CONSTRUCTION SUPERVISION (12%)								
				OTHER COSTS (+/- 27%)							70,000	

CONSTRUCTION COST ESTIMATE

PROJECT: Central Valley Project	PREPARED BY: Regional Office, Sacramento, CA
DIVISION: West San Joaquin Division	ESTIMATE DATE: July 2007 (Revised after DEC)
UNIT: San Luis Unit -- Drainage System -- Westlands Water District-Central	ESTIMATE TYPE: Feasibility
FEATURE: Drainage Feature Re-Evaluation Feasibility Study	PRICE LEVEL: April 2006

PROPERTY CLASS	IDENTIFIED PROPERTY	PLANT ACCOUNT	ITEM	DESCRIPTION	QUANTITY	UNIT	PRICE	AMOUNT	FIELD COST	TOTAL FIELD COST	NONCONTRACT COST	CONSTRUCTION COST
13	04			REUSE AREA G TRANSMISSION LINE - A 12kV power service drop						29,000	8,000	37,000
				from the existing transmission line on W Harlan Avenue to the vicinity								
				of Pumping Plant G.								
		182		Poles & Overhead Conductors					29,000			
			1	Service Poles, Transformer, Disconnect, & Meter	1	ea	20,000.00	20,000				
			2	Mobilization (+/- 5%)				1,000				
			3	Unlisted Items (+/- 15%)				3,000				
				Subtotal				24,000				
				Contingencies (+/- 20%)				5,000				
				Field Cost - Poles & Overhead Conductors				29,000				
				FACILITATING SERVICES (2%)								
				INVESTIGATIONS (3%)								
				DESIGNS & SPECIFICATIONS (10%)								
				CONSTRUCTION SUPERVISION (12%)								
				OTHER COSTS (+/- 27%)							8,000	

CONSTRUCTION COST ESTIMATE

PROJECT: Central Valley Project	PREPARED BY: Regional Office, Sacramento, CA
DIVISION: West San Joaquin Division	ESTIMATE DATE: July 2007 (Revised after DEC)
UNIT: San Luis Unit -- Drainage System -- Westlands Water District-Central	ESTIMATE TYPE: Feasibility
FEATURE: Drainage Feature Re-Evaluation Feasibility Study	PRICE LEVEL: April 2006

PROPERTY CLASS	IDENTIFIED PROPERTY	PLANT ACCOUNT	ITEM	DESCRIPTION	QUANTITY	UNIT	PRICE	AMOUNT	FIELD COST	TOTAL FIELD COST	NONCONTRACT COST	CONSTRUCTION COST
13	05			REUSE AREA H TRANSMISSION LINE - A 12kV power service drop						29,000	8,000	37,000
				from the existing transmission line on S Napa Avenue to the vicinity of								
				Pumping Plant H.								
		182		Poles & Overhead Conductors					29,000			
			1	Service Poles, Transformer, Disconnect, & Meter	1	ea	20,000.00	20,000				
			2	Mobilization (+/- 5%)				1,000				
			3	Unlisted Items (+/- 15%)				3,000				
				Subtotal				24,000				
				Contingencies (+/- 20%)				5,000				
				Field Cost - Poles & Overhead Conductors				29,000				
				FACILITATING SERVICES (2%)								
				INVESTIGATIONS (3%)								
				DESIGNS & SPECIFICATIONS (10%)								
				CONSTRUCTION SUPERVISION (12%)								
				OTHER COSTS (+/- 27%)							8,000	

CONSTRUCTION COST ESTIMATE

PROJECT: Central Valley Project	PREPARED BY: Regional Office, Sacramento, CA
DIVISION: West San Joaquin Division	ESTIMATE DATE: July 2007 (Revised after DEC)
UNIT: San Luis Unit -- Drainage System -- Westlands Water District-Central	ESTIMATE TYPE: Feasibility
FEATURE: Drainage Feature Re-Evaluation Feasibility Study	PRICE LEVEL: April 2006

PROPERTY CLASS	IDENTIFIED PROPERTY	PLANT ACCOUNT	ITEM	DESCRIPTION	QUANTITY	UNIT	PRICE	AMOUNT	FIELD COST	TOTAL FIELD COST	NONCONTRACT COST	CONSTRUCTION COST
13	06			WWD CENTRAL TREATMENT PLANT TRANSMISSION LINE - A 12kV						29,000	8,000	37,000
				power service drop from the existing transmission line on W Harlan								
				Avenue to the vicinity of the WWD Central Treatment Plants.								
		182		Poles & Overhead Conductors					29,000			
			1	Service Poles, Transformer, Disconnect, & Meter	1	ea	20,000.00	20,000				
			2	Mobilization (+/- 5%)				1,000				
			3	Unlisted Items (+/- 15%)				3,000				
				Subtotal				24,000				
				Contingencies (+/- 20%)				5,000				
				Field Cost - Poles & Overhead Conductors				29,000				
				FACILITATING SERVICES (2%)								
				INVESTIGATIONS (3%)								
				DESIGNS & SPECIFICATIONS (10%)								
				CONSTRUCTION SUPERVISION (12%)								
				OTHER COSTS (+/- 27%)							8,000	

CONSTRUCTION COST ESTIMATE

PROJECT: Central Valley Project	PREPARED BY: Regional Office, Sacramento, CA
DIVISION: West San Joaquin Division	ESTIMATE DATE: July 2007 (Revised after DEC)
UNIT: San Luis Unit -- Drainage System -- Westlands Water District-Central	ESTIMATE TYPE: Feasibility
FEATURE: Drainage Feature Re-Evaluation Feasibility Study	PRICE LEVEL: April 2006

PROPERTY CLASS	IDENTIFIED PROPERTY	PLANT ACCOUNT	ITEM	DESCRIPTION	QUANTITY	UNIT	PRICE	AMOUNT	FIELD COST	TOTAL FIELD COST	NONCONTRACT COST	CONSTRUCTION COST
15				GENERAL PROPERTY						9,450,000	2,550,000	12,000,000
	01			SCADA ELECTRICAL & CONTROL EQUIPMENT - This communication						9,450,000	2,550,000	12,000,000
				system consists of a collection of antennas which allow the flow of								
				water to the Reuse Areas to be controlled at the RO Treatment Plant.								
		100		Land and Rights								
				Costs of Land and Rights have been included with RO Treatment Plant.								
		180		Installed Supervisory Control Equipment					9,450,000			
				(1) Re-Use Pump Control Located at RO Treatment Plant					370,000			
				Fiber Optic Cable and Equipment								
			1	F&I fiber optic cable, 12-fiber single mode in 2" HDPE conduit	13,000	ft	12.00	156,000				
			2	F&I splice closure, Preformed Line Products Coyote Runt closure	2	ea	450.00	900				
			3	F&I termination/splice panels, Termination for 24 fibers at each panel	4	ea	500.00	2,000				
			4	Testing	1	ls	4,000.00	4,000				
				Communications Equipment								
			5	F&I NEMA 4 eqpmnt enclosure floor mount; panel, thermostat & fan	2	ea	5,070.00	10,140				
			6	F&I 40' antenna tower	2	ea	4,010.00	8,020				
			7	F&I Antenna tower accessories; Base plate, guying, grounding	2	ea	500.00	1,000				
			8	F&I Antenna; Spread Spectrum 2.3 - 2.5 GHz Parabolic	4	ea	800.00	3,200				
				F&I Coaxial cable, connectors and transient								
			9	Cable	260	ft	2.00	520				
			10	Connectors	8	ea	20.00	160				
			11	F&I WaveRider IP Router/Bridge	4	ea	2,500.00	10,000				
			12	F&I Network Switch with media converter; N-TRON 508FX2	6	ea	1,570.00	9,420				
				Control Equipment								
			13	F&I Rack mntd Re-use Area prioritization server w/ operating system	1	ea	2,500.00	2,500				
			14	F&I HMI monitor	2	ea	300.00	600				
			15	F&I prioritization software for Re-use Area	1	ea	32,800.00	32,800				

CONSTRUCTION COST ESTIMATE

PROJECT: Central Valley Project	PREPARED BY: Regional Office, Sacramento, CA
DIVISION: West San Joaquin Division	ESTIMATE DATE: July 2007 (Revised after DEC)
UNIT: San Luis Unit -- Drainage System -- Westlands Water District-Central	ESTIMATE TYPE: Feasibility
FEATURE: Drainage Feature Re-Evaluation Feasibility Study	PRICE LEVEL: April 2006

PROPERTY CLASS	IDENTIFIED PROPERTY	PLANT ACCOUNT	ITEM	DESCRIPTION	QUANTITY	UNIT	PRICE	AMOUNT	FIELD COST	TOTAL FIELD COST	NONCONTRACT COST	CONSTRUCTION COST
15	01			SCADA ELECTRICAL & CONTROL EQUIPMENT (continued)								
		180		Installed Supervisory Control Equipment (continued)								
				(1) Re-Use Pump Control (continued)								
			16	Mobilization (+/- 5%)				12,063				
			17	Unlisted Items (+/- 15%)				37,998				
			18	Allowance for Procurement Strategies (+/- 5%)				18,679				
				Subtotal				310,000				
				Contingencies (+/- 20%)				60,000				
				Field Cost - (1) Re-Use Pump Control Located at RO Ttmnt Plnt				370,000				
				(2) Re-Use Pump Control Located at Pumping Plants					380,000			
				Communications Equipment								
			1	F&I NEMA 4 eqpmnt enclosure floor mount; panel, thermostat & fan	4	ea	5,070.00	20,280				
			2	F&I 40' antenna tower	4	ea	4,010.00	16,040				
			3	F&I Antenna tower accessories; Base plate, guying, grounding	4	ea	500.00	2,000				
			4	F&I Antenna; Spread Spectrum 2.3 - 2.5 GHz Parabolic	4	ea	1,100.00	4,400				
			5	F&I Antenna; Spread Spectrum 2.3 - 2.5 GHz Omni	4	ea	150.00	600				
				F&I Coaxial cable and connectors								
			6	Cable	520	ft	2.00	1,040				
			7	Connectors	16	ea	20.00	320				
			8	F&I WaveRider IP Router/Bridge	4	ea	2,500.00	10,000				
			9	F&I Network Switch with media converter; N-TRON 304TX	4	ea	320.00	1,280				
			10	F&I 2.4 GHz spread spectrum radios	4	ea	1,200.00	4,800				
				Control Equipment								
				F&I Plant PLC								
			11	Controller (Allen-Bradley compact Logix)	4	ea	3,800.00	15,200				
			12	F&I AC Digital input modules (Allen - Bradley 1769-IA81)	8	ea	200.00	1,600				
			13	F&I AC Digital output modules (Allen - Bradley 1769-OA8)	4	ea	350.00	1,400				
			14	F&I Analog Input Module (Allen - Bradley 1769-IF4I)	4	ea	550.00	2,200				
			15	F&I DC Digital input module (Allen - Bradley 1769-IQ16)	4	ea	280.00	1,120				
			16	F&I Power supply (Allen - Bradley 1769-PA4)	4	ea	300.00	1,200				

CONSTRUCTION COST ESTIMATE

PROJECT: Central Valley Project	PREPARED BY: Regional Office, Sacramento, CA
DIVISION: West San Joaquin Division	ESTIMATE DATE: July 2007 (Revised after DEC)
UNIT: San Luis Unit -- Drainage System -- Westlands Water District-Central	ESTIMATE TYPE: Feasibility
FEATURE: Drainage Feature Re-Evaluation Feasibility Study	PRICE LEVEL: April 2006

PROPERTY CLASS	IDENTIFIED PROPERTY	PLANT ACCOUNT	ITEM	DESCRIPTION	QUANTITY	UNIT	PRICE	AMOUNT	FIELD COST	TOTAL FIELD COST	NONCONTRACT COST	CONSTRUCTION COST
15	01			SCADA ELECTRICAL & CONTROL EQUIPMENT (continued)								
		180		Installed Supervisory Control Equipment (continued)								
				(2) Re-Use Pump Control Located at Pumping Plants (continued)								
			17	F&I Operators panel	4	ea	2,800.00	11,200				
			18	F, T&I: Pumping Plant application, prioritization, & develpmnt software	4	ea	32,800.00	131,200				
				Power Devices								
			19	F&I UPS 500 VA APC	4	ea	1,580.00	6,320				
			20	F&I 24-VDC transducer pwr supply, Acopian Goldbox Linear regulated	4	ea	550.00	2,200				
			21	F&I 12 VDC security sys pwr supply, Acopian Goldbox Linear regulated	4	ea	550.00	2,200				
				Transient protection devices								
			22	F&I 120 VAC transient protection device; MCG Electronics Model 420	4	ea	305.00	1,220				
			23	F&I Din-rail mounted transient protection, receptacle Leviton	4	ea	75.00	300				
			24	F&I 4-to-20 mA transient protection modules, PROTEK	4	ea	120.00	480				
			25	F&I Coax cable transient protection modules	4	ea	150.00	600				
				Depth monitoring equipment								
			26	F&I NEMA 4 depth monitoring equipment enclosures with back panel	4	ea	500.00	2,000				
			27	F&I depth transducer (Druck PTX 1240)	4	ea	1,500.00	6,000				
			28	F&I 4-to-20 mA transient protection module	4	ea	75.00	300				
			29	Mobilization (+/- 5%)				12,375				
			30	Unlisted Items (+/- 15%)				38,981				
			31	Allowance for Procurement Strategies (+/- 5%)				11,144				
				Subtotal				310,000				
				Contingencies (+/- 20%)				70,000				
				Field Cost - (2) Re-Use Pump Control Located Pumping Plants				380,000				

CONSTRUCTION COST ESTIMATE

PROJECT: Central Valley Project	PREPARED BY: Regional Office, Sacramento, CA
DIVISION: West San Joaquin Division	ESTIMATE DATE: July 2007 (Revised after DEC)
UNIT: San Luis Unit -- Drainage System -- Westlands Water District-Central	ESTIMATE TYPE: Feasibility
FEATURE: Drainage Feature Re-Evaluation Feasibility Study	PRICE LEVEL: April 2006

PROPERTY CLASS	IDENTIFIED PROPERTY	PLANT ACCOUNT	ITEM	DESCRIPTION	QUANTITY	UNIT	PRICE	AMOUNT	FIELD COST	TOTAL FIELD COST	NONCONTRACT COST	CONSTRUCTION COST
15	01			SCADA ELECTRICAL & CONTROL EQUIPMENT (continued)								
		180		Installed Supervisory Control Equipment (continued)								
				(3) Farm Pump Control					8,700,000			
				Communications Equipment								
			1	F&I NEMA 12 eqpmnt enclosure wall mount; panel, thermostat & fan	355	ea	4,000.00	1,420,000				
			2	F&I 15' pole antenna tower	351	ea	1,200.00	421,200				
			3	F&I Antenna tower grounding	351	ea	150.00	52,650				
			4	F&I yagi antenna	351	ea	500.00	175,500				
				F&I Coaxial cable and connectors								
			5	Cable	7,020	ft	2.00	14,040				
			6	Connectors	702	ea	20.00	14,040				
			7	F&I 2.4 GHz Spread Spectrum radios	351	ea	1,200.00	421,200				
				Control Equipment								
				F&I Plant RTU								
			8	Controller (Geomation 3300)	351	ea	1,000.00	351,000				
			9	F&I 2-AC Digital input modules (Geomation 1204 STAT)	710	ea	500.00	355,000				
			10	F&I AC Digital output modules (Geomation 1221 RO)	355	ea	550.00	195,250				
			11	F&I Analog Input Module (Geomation 1201 mA)	355	ea	525.00	186,375				
			12	F&I Power supply (Geomation 1110 PS24)	355	ea	200.00	71,000				
			13	F, T&I Software: Farm Well site software development software	351	ea	500.00	175,500				
				Transient protection devices								
			14	F&I 120 VAC transient protection device, MCG Electronics Model 420	355	ea	305.00	108,275				
			15	F&I 4-to-20 mA transient protection modules, PROTEK	355	ea	120.00	42,600				
				Depth monitoring equipment								
			16	F&I NEMA 4 depth monitoring equipment enclosures with back panel	355	ea	500.00	177,500				
			17	F&I depth transducer (Druck PTX 1240)	355	ea	1,500.00	532,500				
			18	F&I 4-to-20 mA transient protection module	355	ea	120.00	42,600				
				Electrical Equipment								

CONSTRUCTION COST ESTIMATE

PROJECT: Central Valley Project	PREPARED BY: Regional Office, Sacramento, CA
DIVISION: West San Joaquin Division	ESTIMATE DATE: July 2007 (Revised after DEC)
UNIT: San Luis Unit -- Drainage System -- Westlands Water District-Central	ESTIMATE TYPE: Feasibility
FEATURE: Drainage Feature Re-Evaluation Feasibility Study	PRICE LEVEL: April 2006

PROPERTY CLASS	IDENTIFIED PROPERTY	PLANT ACCOUNT	ITEM	DESCRIPTION	QUANTITY	UNIT	PRICE	AMOUNT	FIELD COST	TOTAL FIELD COST	NONCONTRACT COST	CONSTRUCTION COST
15	01			SCADA ELECTRICAL & CONTROL EQUIPMENT (continued)								
		180		Installed Supervisory Control Equipment (continued)								
				(3) Farm Pump Control (continued)								
			19	Furnish and install into each communications equipment enclosure:	355	ea	2,800.00	994,000				
				1 hp motor starter								
				600 V, 3 position selector switch								
				Two 600 V oil tight momentary pushbuttons								
				600 V industrial control relay								
				Fuse and fuse block								
				Two 600 volt terminal blocks with 12 circuits								
				Two 600 volt push to test lamps								
				24 VDC Power Supply - Acopian Gold Box								
			20	Mobilization (+/- 5%)				287,512				
			21	Unlisted Items (+/- 15%)				905,661				
			22	Allowance for Procurement Strategies (+/- 5%)				356,597				
				Subtotal				7,300,000				
				Contingencies (+/- 20%)				1,400,000				
				Field Cost - (3) Farm Pump Control				8,700,000				
				Field Cost - Installed Supervisory Control Equipment				9,450,000				
				FACILITATING SERVICES (2%)								
				INVESTIGATIONS (3%)								
				DESIGNS & SPECIFICATIONS (10%)								
				CONSTRUCTION SUPERVISION (12%)								
				OTHER COSTS (+/- 27%)							2,550,000	

CONSTRUCTION COST ESTIMATE

PROJECT: Central Valley Project	PREPARED BY: Regional Office, Sacramento, CA
DIVISION: West San Joaquin Division	ESTIMATE DATE: July 2007 (Revised after DEC)
UNIT: San Luis Unit -- Drainage System -- Westlands Water District-Central	ESTIMATE TYPE: Feasibility
FEATURE: Drainage Feature Re-Evaluation Feasibility Study	PRICE LEVEL: April 2006

PROPERTY CLASS	IDENTIFIED PROPERTY	PLANT ACCOUNT	ITEM	DESCRIPTION	QUANTITY	UNIT	PRICE	AMOUNT	FIELD COST	TOTAL FIELD COST	NONCONTRACT COST	CONSTRUCTION COST
				APPENDIX -- Unit Price for various styles of Mitigation Ponds.								
				One Pond unit is 80 Ac in size.								
12	05			MITIGATION - The following estimates represent the cost of one								
				80-acre site. In the Construction Cost Estimate, the Mitigation for								
				each area will be priced by the number of the various 80-acre								
				sites used.								
				(1) ALTERNATIVE HABITAT - SHALLOW WATER (For 1 - 80 acre pond)						2,900,000		
		130		Structures and Improvements					2,900,000			
			1	Excavation for moat	22,938	cy	4.50	103,221				
			2	Placement & compaction of embankment for road and ramps	17,200	cy	10.00	172,000				
			3	Gravel road surfacing, 6" deep	3,150	cy	65.00	204,750				
			4	Move earth within wetland interior	306,750	cy	5.00	1,533,750				
			5	Fencing, 6' high chain link fence	20	lf	30.00	600				
			6	Gates, 6' high x 20' wide double swing, chain link	2	ea	1,550.00	3,100				
			7	18" dia. HDPE pipe (assume DR32.5)	120	lf	50.00	6,000				
			8	Mobilization (+/- 5%)				101,171				
			9	Unlisted Items (+/- 15%)				275,408				
				Subtotal				2,400,000				
				Contingencies (+/- 20%)				500,000				
				Field Cost - Structures and Improvements				2,900,000				

CONSTRUCTION COST ESTIMATE

PROJECT: Central Valley Project	PREPARED BY: Regional Office, Sacramento, CA
DIVISION: West San Joaquin Division	ESTIMATE DATE: July 2007 (Revised after DEC)
UNIT: San Luis Unit -- Drainage System -- Westlands Water District-Central	ESTIMATE TYPE: Feasibility
FEATURE: Drainage Feature Re-Evaluation Feasibility Study	PRICE LEVEL: April 2006

PROPERTY CLASS	IDENTIFIED PROPERTY	PLANT ACCOUNT	ITEM	DESCRIPTION	QUANTITY	UNIT	PRICE	AMOUNT	FIELD COST	TOTAL FIELD COST	NONCONTRACT COST	CONSTRUCTION COST
12	05			MITIGATION (continued)								
				(2) COMPENSATION HABITAT - SHALLOW HABITAT (For 1 - 80 acre pond)						2,333,000		
		130		Structures and Improvements					2,300,000			
			1	Excavation for moat	23,000	cy	4.50	103,500				
			2	Placement & compaction of embankment for road and ramps	22,000	cy	10.00	220,000				
			3	Gravel road surfacing, 6" deep	3,700	cy	65.00	240,500				
			4	Move earth within wetland interior	204,500	cy	5.00	1,022,500				
			5	Fencing, 6' high chain link fence	20	lf	30.00	600				
			6	Gates, 6' high x 20' wide double swing, chain link	2	ea	1,550.00	3,100				
			7	Mobilization (+/- 5%)				79,510				
			8	Unlisted Items (+/- 15%)				230,290				
				Subtotal				1,900,000				
				Contingencies (+/- 20%)				400,000				
				Field Cost - Structures and Improvements				2,300,000				
		152		Waterways					33,000			
			1	6" dia. Plastic siphon tubes, 10' long (assume HDPE DR32.5)	24	ea	110.00	2,640				
			2	18" dia. HDPE pipe (assume DR32.5)	120	lf	50.00	6,000				
			3	12" gate valves	4	ea	3,500.00	14,000				
			4	Mobilization (+/- 5%)				1,132				
			5	Unlisted Items (+/- 15%)				3,228				
				Subtotal				27,000				
				Contingencies (+/- 20%)				6,000				
				Field Cost - Waterways				33,000				

CONSTRUCTION COST ESTIMATE

PROJECT: Central Valley Project	PREPARED BY: Regional Office, Sacramento, CA
DIVISION: West San Joaquin Division	ESTIMATE DATE: July 2007 (Revised after DEC)
UNIT: San Luis Unit -- Drainage System -- Westlands Water District-Central	ESTIMATE TYPE: Feasibility
FEATURE: Drainage Feature Re-Evaluation Feasibility Study	PRICE LEVEL: April 2006

PROPERTY CLASS	IDENTIFIED PROPERTY	PLANT ACCOUNT	ITEM	DESCRIPTION	QUANTITY	UNIT	PRICE	AMOUNT	FIELD COST	TOTAL FIELD COST	NONCONTRACT COST	CONSTRUCTION COST
12	05			MITIGATION (continued)								
				(3) COMPENSATION HABITAT - DEEP WATER (For 1 - 80 acre pond)						5,200,000		
		130		Structures and Improvements					5,200,000			
			1	Excavation for moat	23,000	cy	4.50	103,500				
			2	Placement & compaction of embankment for road and ramps	15,500	cy	10.00	155,000				
			3	Gravel road surfacing, 6" deep	3,775	cy	65.00	245,375				
			4	Move earth within wetland interior	615,000	cy	5.00	3,075,000				
			5	Fencing, 6' high chain link fence	20	lf	30.00	600				
			6	Gates, 20' wide double swing, chain link	2	ea	1,550.00	3,100				
			7	Mobilization (+/- 5%)				179,129				
			8	Unlisted Items (+/- 15%)				538,296				
				Subtotal				4,300,000				
				Contingencies (+/- 20%)				900,000				
				Field Cost - Structures and Improvements				5,200,000				

CONSTRUCTION COST ESTIMATE

PROJECT: Central Valley Project	PREPARED BY: Regional Office, Sacramento, CA
DIVISION: West San Joaquin Division	ESTIMATE DATE: July 2007 (Revised after DEC)
UNIT: San Luis Unit -- Drainage System -- Westlands Water District-Central	ESTIMATE TYPE: Feasibility
FEATURE: Drainage Feature Re-Evaluation Feasibility Study	PRICE LEVEL: April 2006

PROPERTY CLASS	IDENTIFIED PROPERTY	PLANT ACCOUNT	ITEM	DESCRIPTION	QUANTITY	UNIT	PRICE	AMOUNT	FIELD COST	TOTAL FIELD COST	NONCONTRACT COST	CONSTRUCTION COST
12	05			MITIGATION (continued)								
				(4) APPURTENANT FACILITIES (For 1 - 80 acre pond)						1,210,000		
		130		Structures and Improvements					350,000			
				Based on 2:1 Side Slopes:								
			1	Excavation	17,692	cy	4.50	79,614				
			2	Backfill	16,923	cy	3.00	50,769				
			3	Compacting Backfill	1,731	cy	8.50	14,714				
				Trench Box Earthwork (based on vertical side slopes):								
			4	Excavation	9.6	cy	15.00	144				
			5	Backfill	8.5	cy	7.00	60				
			6	Compacting Backfill	1.2	cy	25.00	30				
				Outlet Items:								
			7	Concrete	13	cy	1,000.00	13,000				
			8	Cementitious Material	3.8	tons	170.00	646				
			9	Reinforcement Steel	1,615	lbs	1.75	2,826				
			10	Unwatering	1	ls	42,308.00	42,308				
			11	Miscellaneous Metalwork - Steel	3,846	lbs	7.00	26,922				
			12	Concrete	5.8	cy	1,000.00	5,800				
			13	Cement	1.54	tons	175.00	270				
			14	Reinforcement	769	lbs	1.75	1,346				
			15	Excavation, common	42	cy	15.00	630				
			16	Backfill	31	cy	10.00	310				
			17	Compacting backfill	31	cy	10.00	310				
			18	Gravel surfacing	3.8	cy	65.00	247				
			19	Mobilization (+/- 5%)				11,997				
			20	Unlisted Items (+/- 15%)				38,058				
				Subtotal				290,000				
				Contingencies (+/- 20%)				60,000				
				Field Cost - Structures and Improvements				350,000				

CONSTRUCTION COST ESTIMATE

PROJECT: Central Valley Project	PREPARED BY: Regional Office, Sacramento, CA
DIVISION: West San Joaquin Division	ESTIMATE DATE: July 2007 (Revised after DEC)
UNIT: San Luis Unit -- Drainage System -- Westlands Water District-Central	ESTIMATE TYPE: Feasibility
FEATURE: Drainage Feature Re-Evaluation Feasibility Study	PRICE LEVEL: April 2006

PROPERTY CLASS	IDENTIFIED PROPERTY	PLANT ACCOUNT	ITEM	DESCRIPTION	QUANTITY	UNIT	PRICE	AMOUNT	FIELD COST	TOTAL FIELD COST	NONCONTRACT COST	CONSTRUCTION COST
12	05			MITIGATION (continued)								
				(4) APPURTENANT FACILITIES (continued)								
		152		Waterways					630,000			
			1	12 inch diameter DR32.5	1,280	lf	29.00	37,120				
			2	24 inch diameter DR32.6	4,570	lf	75.00	342,750				
			3	Inlet Stand Pipe (assumes 100' of 6" dia sch 40 stl pipe/ea)	1	ea	15,000.00	15,000				
			4	2 inch air valves	1.7	ea	1,000.00	1,700				
			5	18" Slide Gate - steel (for draining)	1	ea	5,000.00	5,000				
			6	2' x 3' Adjustable Weir (354 lbs/ea)	2	ea	7,000.00	14,000				
				Manual handwheel operator - 1680 lb capacity								
			7	6" valve (assume gate valve)	1	ea	1,500.00	1,500				
			8	Water Meter	1	ea	15,000.00	15,000				
			9	Mobilization (+/- 5%)				21,604				
			10	Unlisted Items (+/- 15%)				66,327				
				Subtotal				520,000				
				Contingencies (+/- 20%)				110,000				
				Field Cost - Waterways				630,000				

CONSTRUCTION COST ESTIMATE

PROJECT: Central Valley Project	PREPARED BY: Regional Office, Sacramento, CA
DIVISION: West San Joaquin Division	ESTIMATE DATE: July 2007 (Revised after DEC)
UNIT: San Luis Unit -- Drainage System -- Westlands Water District-Central	ESTIMATE TYPE: Feasibility
FEATURE: Drainage Feature Re-Evaluation Feasibility Study	PRICE LEVEL: April 2006

PROPERTY CLASS	IDENTIFIED PROPERTY	PLANT ACCOUNT	ITEM	DESCRIPTION	QUANTITY	UNIT	PRICE	AMOUNT	FIELD COST	TOTAL FIELD COST	NONCONTRACT COST	CONSTRUCTION COST
12	05			MITIGATION (continued)								
				(4) APPURTENANT FACILITIES (continued)								
		160		Pumps and Prime Movers					230,000			
			1	Vertical Turbine Unit; 2-stg; 1 CFS; Rated 450 gpm; TDH=20 ft.	1	ea	50,000.00	50,000				
				w/ TEFC Induction motor @ 3 hp; 1200 rpm								
			2	Vertical Turbine Unit; 1-stg; 5 CFS; Rated 2500 gpm; TDH=25 ft.	1	ea	100,000.00	100,000				
				w/ TEFC Induction motor @ 25 hp; 900 rpm								
			3	Mobilization (+/- 5%)				7,500				
			4	Unlisted Items (+/- 15%)				23,625				
				Subtotal				190,000				
				Contingencies (+/- 20%)				40,000				
				Field Cost - Pumps and Prime Movers				230,000				

CONSTRUCTION COST ESTIMATE

PROJECT: Central Valley Project	PREPARED BY: Regional Office, Sacramento, CA
DIVISION: West San Joaquin Division	ESTIMATE DATE: July 2007 (Revised after DEC)
UNIT: San Luis Unit -- Drainage System -- Westlands Water District-South	ESTIMATE TYPE: Feasibility
FEATURE: Drainage Feature Re-Evaluation Feasibility Study	PRICE LEVEL: April 2006

PROPERTY CLASS	IDENTIFIED PROPERTY	PLANT ACCOUNT	ITEM	DESCRIPTION	QUANTITY	UNIT	PRICE	AMOUNT	FIELD COST	TOTAL FIELD COST	NONCONTRACT COST	CONSTRUCTION COST
				WWD SOUTH AREA - TOTAL PROJECT COST						276,605,500	77,921,500	354,527,000
03				PUMPING PLANTS						4,208,500	1,141,500	5,350,000
	01			PUMPING PLANT A - This pumping plant is located next to Reuse						1,584,500	415,500	2,000,000
				Area A. This plant is rated at 7 1/2 hp; Q = 269 GPM; TDH = 74 ft.								
		100		Land and Rights								
				Costs of Land and Rights have been included with Reuse Area A.								
		130		Structures and Improvements					620,000			
			1	Excavation, common	762	cy	15.00	11,430				
			2	Backfill, common	667	cy	10.00	6,670				
			3	Compacted backfill, common	667	cy	10.00	6,670				
			4	Excavation, braced trench	22	cy	500.00	11,000				
			5	Backfill, braced trench	18	cy	450.00	8,100				
			6	Compacted backfill, braced trench	18	cy	300.00	5,400				
			7	Gravel surfacing	81	cy	65.00	5,265				
			8	Unwatering/dewatering, 7' depth (2 month duration)	1	ls	250,000.00	250,000				
			9	Concrete	40	cy	1,000.00	40,000				
			10	Furnishing and handling cement	11	ton	170.00	1,870				
			11	Furnishing and placing reinforcement	5,720	lb	1.75	10,010				
			12	Chain link fencing	279	lf	30.00	8,370				
			13	CMU Wall (8' high, 15 lf long)	120	sf	100.00	12,000				
			14	Structural Steel - Sunshades (20' x 26'; 10,300 lbs)	1	ea	30,000.00	30,000				
			15	Mobilization (+/- 5%)				20,339				
			16	Unlisted Items (+/- 15%)				64,069				
			17	Allowance for Procurement Strategies (+/- 5%)				28,807				
				Subtotal				520,000				
				Contingencies (+/- 20%)				100,000				
				Field Cost - Structures and Improvements				620,000				

CONSTRUCTION COST ESTIMATE

PROJECT: Central Valley Project	PREPARED BY: Regional Office, Sacramento, CA
DIVISION: West San Joaquin Division	ESTIMATE DATE: July 2007 (Revised after DEC)
UNIT: San Luis Unit -- Drainage System -- Westlands Water District-South	ESTIMATE TYPE: Feasibility
FEATURE: Drainage Feature Re-Evaluation Feasibility Study	PRICE LEVEL: April 2006

PROPERTY CLASS	IDENTIFIED PROPERTY	PLANT ACCOUNT	ITEM	DESCRIPTION	QUANTITY	UNIT	PRICE	AMOUNT	FIELD COST	TOTAL FIELD COST	NONCONTRACT COST	CONSTRUCTION COST
03	01			PUMPING PLANT A (continued)								
		152		Waterways					77,000			
			1	Steel piping & flanges for manifold	2,331	lb	6.00	13,986				
			2	Motor Op. BFV; Class 150; D=6"; 245 lb/valve	1	ea	17,500.00	17,500				
			3	Manually Op. BFV; Class 150; D=6"; 90 lb/valve	2	ea	3,000.00	6,000				
			4	Ball Valve for AV; D=1"; 2 lbs/valve	2	ea	170.00	340				
			5	Air Valves; D=1"; 35 lbs/valve	2	ea	300.00	600				
			6	Tilt Disk Ck. Valve; Class 125; D=6"; 164 lb/valve	1	ea	7,500.00	7,500				
			7	Pressure Sustaining Valve; Class 125; D=6"; 285 lb/valve	1	ea	5,000.00	5,000				
			8	Mobilization (+/- 5%)				2,546				
			9	Unlisted Items (+/- 15%)				8,021				
			10	Allowance for Procurement Strategies (+/- 5%)				3,507				
				Subtotal				65,000				
				Contingencies (+/- 20%)				12,000				
				Field Cost - Waterways				77,000				
		153		Waterway Structures					314,500			
				(1) Flow Meter					14,500			
			1	Pipe Flowmeter; D = 8"	1	ea	9,500.00	9,500				
			2	Mobilization (+/- 5%)				475				
			3	Unlisted Items (+/- 15%)				1,496				
			4	Allowance for Procurement Strategies (+/- 5%)				529				
				Subtotal				12,000				
				Contingencies (+/- 20%)				2,500				
				Field Cost - (1) Flow Meter				14,500				

CONSTRUCTION COST ESTIMATE

PROJECT: Central Valley Project	PREPARED BY: Regional Office, Sacramento, CA
DIVISION: West San Joaquin Division	ESTIMATE DATE: July 2007 (Revised after DEC)
UNIT: San Luis Unit -- Drainage System -- Westlands Water District-South	ESTIMATE TYPE: Feasibility
FEATURE: Drainage Feature Re-Evaluation Feasibility Study	PRICE LEVEL: April 2006

PROPERTY CLASS	IDENTIFIED PROPERTY	PLANT ACCOUNT	ITEM	DESCRIPTION	QUANTITY	UNIT	PRICE	AMOUNT	FIELD COST	TOTAL FIELD COST	NONCONTRACT COST	CONSTRUCTION COST
03	01			PUMPING PLANT A (continued)								
		153		Waterway Structures (continued)								
				(2) Regulating Tank; D = 21 ft; H = 15 ft					300,000			
			1	Strip and Clear, 12" depth	160	cy	6.50	1,040				
			2	Compacting embankment	370	cy	15.00	5,550				
			3	Gravel surfacing	60	cy	65.00	3,900				
			4	Concrete	50	cy	1,000.00	50,000				
			5	Cement	15	ton	170.00	2,550				
			6	Reinforcement	7,000	lb	1.75	12,250				
			7	Chain link fence	240	lf	30.00	7,200				
			8	Precast Concrete Piles, 12" x 12" (reinforced, 60 ft deep)	8	ea	4,000.00	32,000				
			9	F&I Steel Regulating Tank; D=21 ft; H=15 ft; w/ roof	1	ea	80,000.00	80,000				
			10	Mobilization (+/- 5%)				9,725				
			11	Unlisted Items (+/- 15%)				30,632				
			12	Allowance for Procurement Strategies (+/- 5%)				15,153				
				Subtotal				250,000				
				Contingencies (+/- 20%)				50,000				
				Field Cost - (2) Regulating Tank				300,000				
				Field Cost - Waterway Structures				314,500				
		154		Waterway Protective Works					120,000			
			1	Air Chamber; D=9 ft.; cylindrical shaped; 11,000 lbs	1	ea	80,000.00	80,000				
			2	Mobilization (+/- 5%)				4,000				
			3	Unlisted Items (+/- 15%)				12,600				
			4	Allowance for Procurement Strategies (+/- 5%)				3,400				
				Subtotal				100,000				
				Contingencies (+/- 20%)				20,000				
				Field Cost - Waterway Protective Works				120,000				

CONSTRUCTION COST ESTIMATE

PROJECT: Central Valley Project	PREPARED BY: Regional Office, Sacramento, CA
DIVISION: West San Joaquin Division	ESTIMATE DATE: July 2007 (Revised after DEC)
UNIT: San Luis Unit -- Drainage System -- Westlands Water District-South	ESTIMATE TYPE: Feasibility
FEATURE: Drainage Feature Re-Evaluation Feasibility Study	PRICE LEVEL: April 2006

PROPERTY CLASS	IDENTIFIED PROPERTY	PLANT ACCOUNT	ITEM	DESCRIPTION	QUANTITY	UNIT	PRICE	AMOUNT	FIELD COST	TOTAL FIELD COST	NONCONTRACT COST	CONSTRUCTION COST
03	01			PUMPING PLANT A (continued)								
		160		Pumps and Prime Movers					260,000			
			1	Vertical Turbine Unit; 2-stg; 1770 rpm; Rated 269 gpm; TDH=74 ft.	2,360	lb	65.00	153,400				
				W/ vert Induction motor @ 7.5 hp; 1800 rpm; 3ph / 60 hz / 460 v								
			2	Flygt, 8" Std. CP-3152 submersible wastewater pump; 1750 rpm	800	lb	25.00	20,000				
				Q = 900 gpm; TDH = 42 ft.; w/ 20 hp submersible motor								
			3	Mobilization (+/- 5%)				8,670				
			4	Unlisted Items (+/- 15%)				27,311				
			5	Allowance for Procurement Strategies (+/- 5%)				10,620				
				Subtotal				220,000				
				Contingencies (+/- 20%)				40,000				
				Field Cost - Pumps and Prime Movers				260,000				
		170		Accessory Electrical Equipment					105,000			
			1	Furnish and install 100 A, 480V, 3 Phase meter socket	1	ea	500.00	500				
			2	Furnish and install 100 A, 600V, 3 Phase fused disconnect switch	1	ea	1,500.00	1,500				
			3	F&I PVC coated rigid steel conduit - 3/4 Inch	100	ft	15.00	1,500				
			4	F&I PVC coated rigid steel conduit - 2 Inch	50	ft	31.00	1,550				
			5	F&I single conductor - 12 AWG	400	ft	2.50	1,000				
			6	F&I single conductor - 1 AWG	200	ft	5.50	1,100				
			7	F&I grounding system - 4/0 bare copper	200	ft	12.00	2,400				
			8	F&I grounding system - 3/4" dia. 10 foot ground rod	8	ea	175.00	1,400				
			9	F&I transformer and load center, w/ enclosure, breakers, and	1	ea	4,000.00	4,000				
				7.5 KVA, single phase, 480V-240/120 V								
			10	F&I 600V - 600 amp bus MCC w/enclosure, relays, switches,	1	ls	45,000.00	45,000				
				fuse block, terminal block, & 7.5 hp motor starter								
			11	F&I Control board for submersible wastewater pump	1	ls	10,000.00	10,000				

CONSTRUCTION COST ESTIMATE

PROJECT: Central Valley Project	PREPARED BY: Regional Office, Sacramento, CA
DIVISION: West San Joaquin Division	ESTIMATE DATE: July 2007 (Revised after DEC)
UNIT: San Luis Unit -- Drainage System -- Westlands Water District-South	ESTIMATE TYPE: Feasibility
FEATURE: Drainage Feature Re-Evaluation Feasibility Study	PRICE LEVEL: April 2006

PROPERTY CLASS	IDENTIFIED PROPERTY	PLANT ACCOUNT	ITEM	DESCRIPTION	QUANTITY	UNIT	PRICE	AMOUNT	FIELD COST	TOTAL FIELD COST	NONCONTRACT COST	CONSTRUCTION COST
03	01			PUMPING PLANT A (continued)								
		170		Accessory Electrical Equipment (continued)								
			12	Mobilization (+/- 5%)				3,498				
			13	Unlisted Items (+/- 15%)				11,017				
			14	Allowance for Procurement Strategies (+/- 5%)				4,535				
				Subtotal				89,000				
				Contingencies (+/- 20%)				16,000				
				Field Cost - Accessory Electrical Equipment				105,000				
		175		Station Equipment					88,000			
			1	Oil filled, distribution power transformer, 45 kVA; 12.47kV-480V	1	ea	25,000.00	25,000				
			2	7.65-kV MCOV metal oxide distribution class arrester	3	ea	2,000.00	6,000				
			3	3-phase, 15-kV fused disconnect switch, 2E-5E	1	ea	25,000.00	25,000				
			4	50 foot wood pole for incoming line	1	ea	2,000.00	2,000				
			5	Mobilization (+/- 5%)				2,900				
			6	Unlisted Items (+/- 15%)				9,135				
			7	Allowance for Procurement Strategies (+/- 5%)				3,965				
				Subtotal				74,000				
				Contingencies (+/- 20%)				14,000				
				Field Cost - Station Equipment				88,000				
				FACILITATING SERVICES (2%)								
				INVESTIGATIONS (3%)								
				DESIGNS & SPECIFICATIONS (10%)								
				CONSTRUCTION SUPERVISION (12%)								
				OTHER COSTS (+/- 27%)							415,500	

CONSTRUCTION COST ESTIMATE

PROJECT: Central Valley Project	PREPARED BY: Regional Office, Sacramento, CA
DIVISION: West San Joaquin Division	ESTIMATE DATE: July 2007 (Revised after DEC)
UNIT: San Luis Unit -- Drainage System -- Westlands Water District-South	ESTIMATE TYPE: Feasibility
FEATURE: Drainage Feature Re-Evaluation Feasibility Study	PRICE LEVEL: April 2006

PROPERTY CLASS	IDENTIFIED PROPERTY	PLANT ACCOUNT	ITEM	DESCRIPTION	QUANTITY	UNIT	PRICE	AMOUNT	FIELD COST	TOTAL FIELD COST	NONCONTRACT COST	CONSTRUCTION COST
03	02			PUMPING PLANT B - This pumping plant is located next to Reuse						1,218,500	331,500	1,550,000
				Area B. This plant is rated at 7 1/2 hp; Q = 418 GPM; TDH = 49 ft.								
		100		Land and Rights								
				Costs of Land and Rights have been included with Reuse Area B.								
		130		Structures and Improvements					620,000			
			1	Excavation, common	762	cy	15.00	11,430				
			2	Backfill, common	667	cy	10.00	6,670				
			3	Compacted backfill, common	667	cy	10.00	6,670				
			4	Excavation, braced trench	25	cy	500.00	12,500				
			5	Backfill, braced trench	20	cy	450.00	9,000				
			6	Compacted backfill, braced trench	20	cy	300.00	6,000				
			7	Gravel surfacing	81	cy	65.00	5,265				
			8	Unwatering/dewatering, 8' depth (2 month duration)	1	ls	250,000.00	250,000				
			9	Concrete	40	cy	1,000.00	40,000				
			10	Furnishing and handling cement	11	ton	170.00	1,870				
			11	Furnishing and placing reinforcement	5,720	lb	1.75	10,010				
			12	Chain link fencing	279	lf	30.00	8,370				
			13	CMU Wall (8' high, 15 lf long)	120	sf	100.00	12,000				
			14	Structural Steel - Sunshades (20' x 26'; 10,300 lbs)	1	ea	30,000.00	30,000				
			15	Mobilization (+/- 5%)				20,489				
			16	Unlisted Items (+/- 15%)				64,541				
			17	Allowance for Procurement Strategies (+/- 5%)				25,185				
				Subtotal				520,000				
				Contingencies (+/- 20%)				100,000				
				Field Cost - Structures and Improvements				620,000				

CONSTRUCTION COST ESTIMATE

PROJECT: Central Valley Project	PREPARED BY: Regional Office, Sacramento, CA
DIVISION: West San Joaquin Division	ESTIMATE DATE: July 2007 (Revised after DEC)
UNIT: San Luis Unit -- Drainage System -- Westlands Water District-South	ESTIMATE TYPE: Feasibility
FEATURE: Drainage Feature Re-Evaluation Feasibility Study	PRICE LEVEL: April 2006

PROPERTY CLASS	IDENTIFIED PROPERTY	PLANT ACCOUNT	ITEM	DESCRIPTION	QUANTITY	UNIT	PRICE	AMOUNT	FIELD COST	TOTAL FIELD COST	NONCONTRACT COST	CONSTRUCTION COST
03	02			PUMPING PLANT B (continued)								
		152		Waterways					58,000			
			1	Steel piping & flanges for manifold	2,069	lb	6.00	12,414				
			2	Motor Op. BFV; Class 150; D=6"; 245 lb/valve	1	ea	17,500.00	17,500				
			3	Tilt Disk Ck. Valve; Class 125; D=6"; 164 lb/valve	1	ea	7,500.00	7,500				
			4	Ball Valve for AV; D=1"; 2 lbs/valve	2	ea	170.00	340				
			5	Air Valves; D=1"; 35 lbs/valve	2	ea	300.00	600				
			6	Mobilization (+/- 5%)				1,918				
			7	Unlisted Items (+/- 15%)				6,041				
			8	Allowance for Procurement Strategies (+/- 5%)				2,688				
				Subtotal				49,000				
				Contingencies (+/- 20%)				9,000				
				Field Cost - Waterways				58,000				
		153		Waterway Structures					14,500			
			1	Pipe Flowmeter; D = 8"	1	ea	9,500.00	9,500				
			2	Mobilization (+/- 5%)				475				
			3	Unlisted Items (+/- 15%)				1,496				
			4	Allowance for Procurement Strategies (+/- 5%)				529				
				Subtotal				12,000				
				Contingencies (+/- 20%)				2,500				
				Field Cost - Waterway Structures				14,500				

CONSTRUCTION COST ESTIMATE

PROJECT: Central Valley Project	PREPARED BY: Regional Office, Sacramento, CA
DIVISION: West San Joaquin Division	ESTIMATE DATE: July 2007 (Revised after DEC)
UNIT: San Luis Unit -- Drainage System -- Westlands Water District-South	ESTIMATE TYPE: Feasibility
FEATURE: Drainage Feature Re-Evaluation Feasibility Study	PRICE LEVEL: April 2006

PROPERTY CLASS	IDENTIFIED PROPERTY	PLANT ACCOUNT	ITEM	DESCRIPTION	QUANTITY	UNIT	PRICE	AMOUNT	FIELD COST	TOTAL FIELD COST	NONCONTRACT COST	CONSTRUCTION COST
03	02			PUMPING PLANT B (continued)								
		154		Waterway Protective Works					120,000			
			1	Air Chamber; D=9 ft.; cylindrical shaped; 11,000 lbs	1	ea	80,000.00	80,000				
			2	Mobilization (+/- 5%)				4,000				
			3	Unlisted Items (+/- 15%)				12,600				
			4	Allowance for Procurement Strategies (+/- 5%)				3,400				
				Subtotal				100,000				
				Contingencies (+/- 20%)				20,000				
				Field Cost - Waterway Protective Works				120,000				
		160		Pumps and Prime Movers					260,000			
			1	Vertical Turbine Unit; 1-stg; 1770 rpm; Rated 418 gpm; TDH=49 ft.	2,360	lb	65.00	153,400				
				W/ vert Induction motor @ 15 hp; 1800 rpm; 3ph / 60 hz / 460 v								
			2	Flygt, 8" Std. CP-3152 submersible wastewater pump; 1750 rpm	800	lb	25.00	20,000				
				Q = 900 gpm; TDH = 42 ft.; w/ 20 hp submersible motor								
			3	Mobilization (+/- 5%)				8,670				
			4	Unlisted Items (+/- 15%)				27,311				
			5	Allowance for Procurement Strategies (+/- 5%)				10,620				
				Subtotal				220,000				
				Contingencies (+/- 20%)				40,000				
				Field Cost - Pumps and Prime Movers				260,000				

CONSTRUCTION COST ESTIMATE

PROJECT: Central Valley Project	PREPARED BY: Regional Office, Sacramento, CA
DIVISION: West San Joaquin Division	ESTIMATE DATE: July 2007 (Revised after DEC)
UNIT: San Luis Unit -- Drainage System -- Westlands Water District-South	ESTIMATE TYPE: Feasibility
FEATURE: Drainage Feature Re-Evaluation Feasibility Study	PRICE LEVEL: April 2006

PROPERTY CLASS	IDENTIFIED PROPERTY	PLANT ACCOUNT	ITEM	DESCRIPTION	QUANTITY	UNIT	PRICE	AMOUNT	FIELD COST	TOTAL FIELD COST	NONCONTRACT COST	CONSTRUCTION COST
03	02			PUMPING PLANT B (continued)								
		170		Accessory Electrical Equipment					58,000			
			1	F&I PVC coated rigid steel conduit - 3/4 Inch	100	ft	15.00	1,500				
			2	F&I PVC coated rigid steel conduit - 2 Inch	50	ft	31.00	1,550				
			3	F&I single conductor - 12 AWG	400	ft	2.50	1,000				
			4	F&I single conductor - 1 AWG	200	ft	5.50	1,100				
			5	F&I grounding system - 4/0 bare copper	200	ft	12.00	2,400				
			6	F&I grounding system - 3/4" dia. 10 foot ground rod	8	ea	175.00	1,400				
			7	F&I Distribution Board w/ enclosure, trips, & A frames	1	ls	2,850.00	2,850				
			8	F&I transformer and load center, w/ enclosure, breakers, and	1	ea	4,000.00	4,000				
				7.5 KVA, single phase, 480V-240/120 V								
			9	F&I Control board for main pump, w/enclosure, relays, switches,	1	ls	10,000.00	10,000				
				fuse block, terminal block, & 7.5 hp motor starter								
			10	F&I Control board for submersible wastewater pump	1	ls	10,000.00	10,000				
			11	Furnish and install 100 A, 480V, 3 Phase meter socket	1	ea	500.00	500				
			12	Furnish and install 100 A, 600V, 3 Phase fused disconnect switch	1	ea	1,500.00	1,500				
			13	Mobilization (+/- 5%)				1,890				
			14	Unlisted Items (+/- 15%)				5,954				
			15	Allowance for Procurement Strategies (+/- 5%)				2,357				
				Subtotal				48,000				
				Contingencies (+/- 20%)				10,000				
				Field Cost - Accessory Electrical Equipment				58,000				

CONSTRUCTION COST ESTIMATE

PROJECT: Central Valley Project	PREPARED BY: Regional Office, Sacramento, CA
DIVISION: West San Joaquin Division	ESTIMATE DATE: July 2007 (Revised after DEC)
UNIT: San Luis Unit -- Drainage System -- Westlands Water District-South	ESTIMATE TYPE: Feasibility
FEATURE: Drainage Feature Re-Evaluation Feasibility Study	PRICE LEVEL: April 2006

PROPERTY CLASS	IDENTIFIED PROPERTY	PLANT ACCOUNT	ITEM	DESCRIPTION	QUANTITY	UNIT	PRICE	AMOUNT	FIELD COST	TOTAL FIELD COST	NONCONTRACT COST	CONSTRUCTION COST
03	02			PUMPING PLANT B (continued)								
		175		Station Equipment					88,000			
			1	Oil filled, distribution power transformer, 45 kVA; 12.47kV-480V	1	ea	25,000.00	25,000				
			2	7.65-kV MCOV metal oxide distribution class arrester	3	ea	2,000.00	6,000				
			3	3-phase, 15-kV fused disconnect switch, 2E-5E	1	ea	25,000.00	25,000				
			4	50 foot wood pole for incoming line	1	ea	2,000.00	2,000				
			5	Mobilization (+/- 5%)				2,900				
			6	Unlisted Items (+/- 15%)				9,135				
			7	Allowance for Procurement Strategies (+/- 5%)				3,965				
				Subtotal				74,000				
				Contingencies (+/- 20%)				14,000				
				Field Cost - Station Equipment				88,000				
				FACILITATING SERVICES (2%)								
				INVESTIGATIONS (3%)								
				DESIGNS & SPECIFICATIONS (10%)								
				CONSTRUCTION SUPERVISION (12%)								
				OTHER COSTS (+/- 27%)							331,500	

CONSTRUCTION COST ESTIMATE

PROJECT: Central Valley Project	PREPARED BY: Regional Office, Sacramento, CA
DIVISION: West San Joaquin Division	ESTIMATE DATE: July 2007 (Revised after DEC)
UNIT: San Luis Unit -- Drainage System -- Westlands Water District-South	ESTIMATE TYPE: Feasibility
FEATURE: Drainage Feature Re-Evaluation Feasibility Study	PRICE LEVEL: April 2006

PROPERTY CLASS	IDENTIFIED PROPERTY	PLANT ACCOUNT	ITEM	DESCRIPTION	QUANTITY	UNIT	PRICE	AMOUNT	FIELD COST	TOTAL FIELD COST	NONCONTRACT COST	CONSTRUCTION COST
03	03			PUMPING PLANT C - This pumping plant is located next to Reuse						1,405,500	394,500	1,800,000
				Area C. This plant is rated at 40 hp; Q = 661 GPM; TDH = 151 ft.								
		100		Land and Rights								
				Costs of Land and Rights have been included with Reuse Area C.								
		130		Structures and Improvements					640,000			
			1	Excavation, common	800	cy	15.00	12,000				
			2	Backfill, common	701	cy	10.00	7,010				
			3	Compacted backfill, common	701	cy	10.00	7,010				
			4	Excavation, braced trench	26	cy	500.00	13,000				
			5	Backfill, braced trench	21	cy	450.00	9,450				
			6	Compacted backfill, braced trench	21	cy	300.00	6,300				
			7	Gravel surfacing	83	cy	65.00	5,395				
			8	Unwatering/dewatering, 8' depth (2 month duration)	1	ls	250,000.00	250,000				
			9	Concrete	45	cy	1,000.00	45,000				
			10	Furnishing and handling cement	13	ton	170.00	2,210				
			11	Furnishing and placing reinforcement	6,618	lb	1.75	11,582				
			12	Chain link fencing	287	lf	30.00	8,610				
			13	CMU Wall (8' high, 15 lf long)	120	sf	100.00	12,000				
			14	Structural Steel - Sunshades (20' x 26'; 10,300 lbs)	1	ea	30,000.00	30,000				
			15	Mobilization (+/- 5%)				20,978				
			16	Unlisted Items (+/- 15%)				66,082				
			17	Allowance for Procurement Strategies (+/- 5%)				23,373				
				Subtotal				530,000				
				Contingencies (+/- 20%)				110,000				
				Field Cost - Structures and Improvements				640,000				

CONSTRUCTION COST ESTIMATE

PROJECT: Central Valley Project	PREPARED BY: Regional Office, Sacramento, CA
DIVISION: West San Joaquin Division	ESTIMATE DATE: July 2007 (Revised after DEC)
UNIT: San Luis Unit -- Drainage System -- Westlands Water District-South	ESTIMATE TYPE: Feasibility
FEATURE: Drainage Feature Re-Evaluation Feasibility Study	PRICE LEVEL: April 2006

PROPERTY CLASS	IDENTIFIED PROPERTY	PLANT ACCOUNT	ITEM	DESCRIPTION	QUANTITY	UNIT	PRICE	AMOUNT	FIELD COST	TOTAL FIELD COST	NONCONTRACT COST	CONSTRUCTION COST
03	03			PUMPING PLANT C (continued)								
		152		Waterways					63,000			
			1	Steel piping & flanges for manifold	2,181	lb	6.00	13,086				
			2	Motor Op. BFV; Class 150; D=8"; 320 lb/valve	1	ea	18,750.00	18,750				
			3	Tilt Disk Ck. Valve; Class 125; D=8"; 265 lb/valve	1	ea	8,500.00	8,500				
			4	Ball Valve for AV; D=1"; 2 lbs/valve	2	ea	170.00	340				
			5	Air Valves; D=1"; 35 lbs/valve	2	ea	300.00	600				
			6	Mobilization (+/- 5%)				2,064				
			7	Unlisted Items (+/- 15%)				6,501				
			8	Allowance for Procurement Strategies (+/- 5%)				2,159				
				Subtotal				52,000				
				Contingencies (+/- 20%)				11,000				
				Field Cost - Waterways				63,000				
		153		Waterway Structures					14,500			
			1	Pipe Flowmeter; D = 8"	1	ea	9,500.00	9,500				
			2	Mobilization (+/- 5%)				475				
			3	Unlisted Items (+/- 15%)				1,496				
			4	Allowance for Procurement Strategies (+/- 5%)				529				
				Subtotal				12,000				
				Contingencies (+/- 20%)				2,500				
				Field Cost - Waterway Structures				14,500				

CONSTRUCTION COST ESTIMATE

PROJECT: Central Valley Project	PREPARED BY: Regional Office, Sacramento, CA
DIVISION: West San Joaquin Division	ESTIMATE DATE: July 2007 (Revised after DEC)
UNIT: San Luis Unit -- Drainage System -- Westlands Water District-South	ESTIMATE TYPE: Feasibility
FEATURE: Drainage Feature Re-Evaluation Feasibility Study	PRICE LEVEL: April 2006

PROPERTY CLASS	IDENTIFIED PROPERTY	PLANT ACCOUNT	ITEM	DESCRIPTION	QUANTITY	UNIT	PRICE	AMOUNT	FIELD COST	TOTAL FIELD COST	NONCONTRACT COST	CONSTRUCTION COST
03	03			PUMPING PLANT C (continued)								
		154		Waterway Protective Works					200,000			
			1	Air Chamber; D=13 ft.; cylindrical shaped; 18,700 lbs	1	ea	130,000.00	130,000				
			2	Mobilization (+/- 5%)				6,500				
			3	Unlisted Items (+/- 15%)				20,475				
			4	Allowance for Procurement Strategies (+/- 5%)				8,025				
				Subtotal				165,000				
				Contingencies (+/- 20%)				35,000				
				Field Cost - Waterway Protective Works				200,000				
		160		Pumps and Prime Movers					310,000			
			1	Vertical Turbine Unit; 3-stg; 1770 rpm; Rated 661 gpm; TDH=151 ft.	3,630	lb	50.00	181,500				
				W/ vert Induction motor @ 40 hp; 1800 rpm; 3ph / 60 hz / 460 v								
			2	Flygt, 8" Std. CP-3152 submersible wastewater pump; 1750 rpm	800	lb	25.00	20,000				
				Q = 900 gpm; TDH = 42 ft.; w/ 20 hp submersible motor								
			3	Mobilization (+/- 5%)				10,075				
			4	Unlisted Items (+/- 15%)				31,736				
			5	Allowance for Procurement Strategies (+/- 5%)				16,689				
				Subtotal				260,000				
				Contingencies (+/- 20%)				50,000				
				Field Cost - Pumps and Prime Movers				310,000				

CONSTRUCTION COST ESTIMATE

PROJECT: Central Valley Project	PREPARED BY: Regional Office, Sacramento, CA
DIVISION: West San Joaquin Division	ESTIMATE DATE: July 2007 (Revised after DEC)
UNIT: San Luis Unit -- Drainage System -- Westlands Water District-South	ESTIMATE TYPE: Feasibility
FEATURE: Drainage Feature Re-Evaluation Feasibility Study	PRICE LEVEL: April 2006

PROPERTY CLASS	IDENTIFIED PROPERTY	PLANT ACCOUNT	ITEM	DESCRIPTION	QUANTITY	UNIT	PRICE	AMOUNT	FIELD COST	TOTAL FIELD COST	NONCONTRACT COST	CONSTRUCTION COST
03	03			PUMPING PLANT C (continued)								
		170		Accessory Electrical Equipment					68,000			
			1	F&I PVC coated rigid steel conduit - 3/4 Inch	50	ft	15.00	750				
			2	F&I PVC coated rigid steel conduit - 2 Inch	100	ft	31.00	3,100				
			3	F&I single conductor - 12 AWG	200	ft	2.50	500				
			4	F&I single conductor - 4 AWG	200	ft	4.00	800				
				F&I single conductor - 4/0 AWG	200	ft	15.00	3,000				
			5	F&I grounding system - 4/0 bare copper	200	ft	12.00	2,400				
			6	F&I grounding system - 3/4" dia. 10 foot ground rod	8	ea	175.00	1,400				
			7	F&I Distribution Board w/ enclosure, trips, & A frames	1	ls	5,816.00	5,816				
			8	F&I transformer and load center, w/ enclosure, breakers, and	1	ea	4,000.00	4,000				
				7.5 KVA, single phase, 480V-240/120 V								
			9	F&I Control board for main pump, w/enclosure, relays, switches,	1	ls	11,000.00	11,000				
				fuse block, terminal block, & 40 hp motor starter								
			10	F&I Control board for submersible wastewater pump	1	ls	10,000.00	10,000				
			11	Furnish and install 100 A, 480V, 3 Phase meter socket	1	ea	500.00	500				
			12	Furnish and install 100 A, 600V, 3 Phase fused disconnect switch	1	ea	1,500.00	1,500				
			13	Mobilization (+/- 5%)				2,238				
			14	Unlisted Items (+/- 15%)				7,051				
			15	Allowance for Procurement Strategies (+/- 5%)				2,945				
				Subtotal				57,000				
				Contingencies (+/- 20%)				11,000				
				Field Cost - Accessory Electrical Equipment				68,000				

CONSTRUCTION COST ESTIMATE

PROJECT: Central Valley Project	PREPARED BY: Regional Office, Sacramento, CA
DIVISION: West San Joaquin Division	ESTIMATE DATE: July 2007 (Revised after DEC)
UNIT: San Luis Unit -- Drainage System -- Westlands Water District-South	ESTIMATE TYPE: Feasibility
FEATURE: Drainage Feature Re-Evaluation Feasibility Study	PRICE LEVEL: April 2006

PROPERTY CLASS	IDENTIFIED PROPERTY	PLANT ACCOUNT	ITEM	DESCRIPTION	QUANTITY	UNIT	PRICE	AMOUNT	FIELD COST	TOTAL FIELD COST	NONCONTRACT COST	CONSTRUCTION COST
03	03			PUMPING PLANT C (continued)								
		175		Station Equipment					110,000			
			1	Oil filled, distribution power transformer, 112.5 kVA; 12.47kV-480V	1	ea	40,000.00	40,000				
			2	7.65-kV MCOV metal oxide distribution class arrester	3	ea	2,000.00	6,000				
			3	3-phase, 15-kV fused disconnect switch, 5E-10E	1	ea	25,000.00	25,000				
			4	50 foot wood pole for incoming line	1	ea	2,000.00	2,000				
			5	Mobilization (+/- 5%)				3,650				
			6	Unlisted Items (+/- 15%)				11,498				
			7	Allowance for Procurement Strategies (+/- 5%)				4,853				
				Subtotal				93,000				
				Contingencies (+/- 20%)				17,000				
				Field Cost - Station Equipment				110,000				
				FACILITATING SERVICES (2%)								
				INVESTIGATIONS (3%)								
				DESIGNS & SPECIFICATIONS (10%)								
				CONSTRUCTION SUPERVISION (12%)								
				OTHER COSTS (+/- 27%)							394,500	

CONSTRUCTION COST ESTIMATE

PROJECT: Central Valley Project	PREPARED BY: Regional Office, Sacramento, CA
DIVISION: West San Joaquin Division	ESTIMATE DATE: July 2007 (Revised after DEC)
UNIT: San Luis Unit -- Drainage System -- Westlands Water District-South	ESTIMATE TYPE: Feasibility
FEATURE: Drainage Feature Re-Evaluation Feasibility Study	PRICE LEVEL: April 2006

PROPERTY CLASS	IDENTIFIED PROPERTY	PLANT ACCOUNT	ITEM	DESCRIPTION	QUANTITY	UNIT	PRICE	AMOUNT	FIELD COST	TOTAL FIELD COST	NONCONTRACT COST	CONSTRUCTION COST
07				DRAINS						77,540,000	20,660,000	98,200,000
	01			COLLECTION SYSTEM A -- This HDPE pipe collection system serivices						9,810,000	2,690,000	12,500,000
				approximately 6,510 acres of land; Total Length = 18.50 miles of pipe;								
				Pipe D range = 4" to 18". All pipes discharge to Reuse Area A.								
		100		Land and Rights					410,000			
			1	Permanent Easements	45	Ac	2,100.00	94,500				
			2	Temporary Easements	168	Ac	1,470.00	246,960				
			3	Unlisted Items (+/- 5%)				18,540				
				Subtotal				360,000				
				Contingencies (+/- 15%)				50,000				
				Field Cost - Land and Rights				410,000				
		152		Waterways					6,000,000			
			1	Excavation	230,000	cy	4.50	1,035,000				
			2	Backfill	230,000	cy	3.00	690,000				
			3	Compacting backfill	24,900	cy	8.50	211,650				
			4	Select fill (bedding)	820	cy	55.00	45,100				
			5	Unwatering	1	ls	550,000.00	550,000				
				Furnish and Lay the following HDPE Pipe								
			6	4 inch DR26	2,640	lf	8.50	22,440				
			7	5 inch DR26	13,200	lf	10.00	132,000				
			8	6 inch DR32.5	26,400	lf	11.00	290,400				
			9	7 inch DR32.5	15,800	lf	12.00	189,600				
			10	8 inch DR32.5	10,600	lf	14.50	153,700				
			11	10 inch DR32.5	13,200	lf	19.00	250,800				
			12	12 inch DR32.5	7,920	lf	29.00	229,680				
			13	14 inch DR32.5	2,640	lf	33.00	87,120				
			14	16 inch DR32.5	2,640	lf	40.00	105,600				
			15	18 inch DR32.5	2,640	lf	50.00	132,000				

CONSTRUCTION COST ESTIMATE

PROJECT: Central Valley Project	PREPARED BY: Regional Office, Sacramento, CA
DIVISION: West San Joaquin Division	ESTIMATE DATE: July 2007 (Revised after DEC)
UNIT: San Luis Unit -- Drainage System -- Westlands Water District-South	ESTIMATE TYPE: Feasibility
FEATURE: Drainage Feature Re-Evaluation Feasibility Study	PRICE LEVEL: April 2006

PROPERTY CLASS	IDENTIFIED PROPERTY	PLANT ACCOUNT	ITEM	DESCRIPTION	QUANTITY	UNIT	PRICE	AMOUNT	FIELD COST	TOTAL FIELD COST	NONCONTRACT COST	CONSTRUCTION COST
07	01			COLLECTION SYSTEM A (continued)								
		152		Waterways (continued)								
			16	Mobilization (+/- 5%)				206,255				
			17	Unlisted Items (+/- 15%)				668,656				
				Subtotal				5,000,000				
				Contingencies (+/- 20%)				1,000,000				
				Field Cost - Waterways				6,000,000				
		153		Waterway Structures					3,400,000			
			1	Pipe Crossings, Roads: Pipe Dia 24" and less	39	ls	60,000.00	2,340,000				
			2	Mobilization (+/- 5%)				117,000				
			3	Unlisted Items (+/- 15%)				343,000				
				Subtotal				2,800,000				
				Contingencies (+/- 20%)				600,000				
				Field Cost - Waterway Structures				3,400,000				
				FACILITATING SERVICES (2%)								
				INVESTIGATIONS (3%)								
				DESIGNS & SPECIFICATIONS (10%)								
				CONSTRUCTION SUPERVISION (12%)								
				OTHER COSTS (+/- 27%)							2,690,000	

CONSTRUCTION COST ESTIMATE

PROJECT: Central Valley Project	PREPARED BY: Regional Office, Sacramento, CA
DIVISION: West San Joaquin Division	ESTIMATE DATE: July 2007 (Revised after DEC)
UNIT: San Luis Unit -- Drainage System -- Westlands Water District-South	ESTIMATE TYPE: Feasibility
FEATURE: Drainage Feature Re-Evaluation Feasibility Study	PRICE LEVEL: April 2006

PROPERTY CLASS	IDENTIFIED PROPERTY	PLANT ACCOUNT	ITEM	DESCRIPTION	QUANTITY	UNIT	PRICE	AMOUNT	FIELD COST	TOTAL FIELD COST	NONCONTRACT COST	CONSTRUCTION COST
07	02			COLLECTION SYSTEM B -- This HDPE pipe collection system services						19,890,000	5,110,000	25,000,000
				approximately 10,910 acres of land: Total length = 30.97 miles;								
				Pipe D range = 4" to 26". All pipes discharge to Reuse Area B.								
		100		Land and Rights					690,000			
			1	Permanent Easements	75	Ac	2,100.00	157,500				
			2	Temporary Easements	282	Ac	1,470.00	414,540				
			3	Unlisted Items (+/- 5%)				27,960				
				Subtotal				600,000				
				Contingencies (+/- 15%)				90,000				
				Field Cost - Land and Rights				690,000				
		152		Waterways					15,500,000			
			1	Excavation	419,000	cy	4.50	1,885,500				
			2	Backfill	410,000	cy	3.00	1,230,000				
			3	Compacting backfill	39,400	cy	8.50	334,900				
			4	Select fill (bedding)	1,400	cy	55.00	77,000				
			5	Excavation - Trench box	121,000	cy	15.00	1,815,000				
			6	Backfill - Trench box	120,000	cy	7.00	840,000				
			7	Compacting backfill - Trench box	11,310	cy	20.00	226,200				
			8	Select fill (bedding) - Trench box	400	cy	60.00	24,000				
			9	Unwatering	1	ls	1,100,000.00	1,100,000				
				Furnish and Lay the following HDPE Pipe								
			10	4 inch DR26	5,910	lf	8.50	50,235				
			11	5 inch DR26	19,200	lf	10.00	192,000				
			12	6 inch DR32.5	20,500	lf	11.00	225,500				
			13	7 inch DR32.5	10,600	lf	12.00	127,200				
			14	8 inch DR32.5	35,400	lf	14.50	513,300				
			15	10 inch DR32.5	43,300	lf	19.00	822,700				
			16	12 inch DR32.5	5,280	lf	29.00	153,120				
			17	14 inch DR32.5	2,640	lf	33.00	87,120				
			18	16 inch DR32.5	6,380	lf	40.00	255,200				
			19	18 inch DR32.5	3,730	lf	50.00	186,500				

CONSTRUCTION COST ESTIMATE

PROJECT: Central Valley Project	PREPARED BY: Regional Office, Sacramento, CA
DIVISION: West San Joaquin Division	ESTIMATE DATE: July 2007 (Revised after DEC)
UNIT: San Luis Unit -- Drainage System -- Westlands Water District-South	ESTIMATE TYPE: Feasibility
FEATURE: Drainage Feature Re-Evaluation Feasibility Study	PRICE LEVEL: April 2006

PROPERTY CLASS	IDENTIFIED PROPERTY	PLANT ACCOUNT	ITEM	DESCRIPTION	QUANTITY	UNIT	PRICE	AMOUNT	FIELD COST	TOTAL FIELD COST	NONCONTRACT COST	CONSTRUCTION COST
07	02			COLLECTION SYSTEM B (continued)								
		152		Waterways (continued)								
			20	20 inch DR32.5	5,280	lf	55.00	290,400				
			21	24 inch DR32.5	2,640	lf	75.00	198,000				
			22	26 inch DR32.5	2,640	lf	85.00	224,400				
			23	Mobilization (+/- 5%)				542,914				
			24	Unlisted Items (+/- 15%)				1,598,811				
				Subtotal				13,000,000				
				Contingencies (+/- 20%)				2,500,000				
				Field Cost - Waterways				15,500,000				
		153		Waterway Structures					3,700,000			
			1	Pipe Crossings, Roads: Pipe Dia 36" and less	29	ls	80,000.00	2,320,000				
			2	Pipe Crossings, Water/Railroads: Pipe Dia 24" and less	1	ls	250,000.00	250,000				
			3	Mobilization (+/- 5%)				128,500				
			4	Unlisted Items (+/- 15%)				401,500				
				Subtotal				3,100,000				
				Contingencies (+/- 20%)				600,000				
				Field Cost - Waterway Structures				3,700,000				
				FACILITATING SERVICES (2%)								
				INVESTIGATIONS (3%)								
				DESIGNS & SPECIFICATIONS (10%)								
				CONSTRUCTION SUPERVISION (12%)								
				OTHER COSTS (+/- 27%)							5,110,000	

CONSTRUCTION COST ESTIMATE

PROJECT: Central Valley Project	PREPARED BY: Regional Office, Sacramento, CA
DIVISION: West San Joaquin Division	ESTIMATE DATE: July 2007 (Revised after DEC)
UNIT: San Luis Unit -- Drainage System -- Westlands Water District-South	ESTIMATE TYPE: Feasibility
FEATURE: Drainage Feature Re-Evaluation Feasibility Study	PRICE LEVEL: April 2006

PROPERTY CLASS	IDENTIFIED PROPERTY	PLANT ACCOUNT	ITEM	DESCRIPTION	QUANTITY	UNIT	PRICE	AMOUNT	FIELD COST	TOTAL FIELD COST	NONCONTRACT COST	CONSTRUCTION COST
07	03			COLLECTION SYSTEM C -- This HDPE pipe collection system services						44,150,000	11,850,000	56,000,000
				approximately 17,830 acres of land: Total length = 50.63 miles;								
				Pipe D range = 4" to 42". All pipes discharge to Reuse Area C.								
		100		Land and Rights					1,150,000			
			1	Permanent Easements	123	Ac	2,100.00	258,300				
			2	Temporary Easements	460	Ac	1,470.00	676,200				
			3	Unlisted Items (+/- 5%)				45,500				
				Subtotal				980,000				
				Contingencies (+/- 15%)				170,000				
				Field Cost - Land and Rights				1,150,000				
		152		Waterways					32,000,000			
			1	Excavation	340,000	cy	6.00	2,040,000				
			2	Backfill	340,000	cy	4.00	1,360,000				
			3	Compacting backfill	49,800	cy	10.50	522,900				
			4	Select fill (bedding)	2,570	cy	70.00	179,900				
			5	Excavation - Trench box	110,000	cy	20.00	2,200,000				
			6	Backfill - Trench box	100,000	cy	10.00	1,000,000				
			7	Compacting backfill - Trench box	70,900	cy	30.00	2,127,000				
			8	Select fill (bedding) - Trench box	3,660	cy	75.00	274,500				
			9	Unwatering	1	ls	1,650,000.00	1,650,000				
				Furnish and Lay the following HDPE Pipe								
			10	4 inch DR26	4,070	lf	10.50	42,735				
			11	5 inch DR26	34,700	lf	12.50	433,750				
			12	6 inch DR32.5	37,000	lf	13.50	499,500				
			13	7 inch DR32.5	21,100	lf	15.00	316,500				
			14	8 inch DR32.5	50,200	lf	18.50	928,700				
			15	10 inch DR32.5	37,400	lf	24.00	897,600				
			16	12 inch DR32.5	15,800	lf	35.00	553,000				
			17	14 inch DR32.5	13,900	lf	40.00	556,000				
			18	16 inch DR32.5	8,800	lf	50.00	440,000				
			19	18 inch DR32.5	2,640	lf	60.00	158,400				
			20	20 inch DR32.5	5,280	lf	70.00	369,600				

CONSTRUCTION COST ESTIMATE

PROJECT: Central Valley Project	PREPARED BY: Regional Office, Sacramento, CA
DIVISION: West San Joaquin Division	ESTIMATE DATE: July 2007 (Revised after DEC)
UNIT: San Luis Unit -- Drainage System -- Westlands Water District-South	ESTIMATE TYPE: Feasibility
FEATURE: Drainage Feature Re-Evaluation Feasibility Study	PRICE LEVEL: April 2006

PROPERTY CLASS	IDENTIFIED PROPERTY	PLANT ACCOUNT	ITEM	DESCRIPTION	QUANTITY	UNIT	PRICE	AMOUNT	FIELD COST	TOTAL FIELD COST	NONCONTRACT COST	CONSTRUCTION COST
07	03			COLLECTION SYSTEM C (continued)								
		152		Waterways (continued)								
			21	24 inch DR32.5	5,280	lf	95.00	501,600				
			22	26 inch DR32.5	7,420	lf	110.00	816,200				
			23	28 inch DR32.5	2,640	lf	120.00	316,800				
			24	30 inch DR32.5	5,280	lf	135.00	712,800				
			25	32 inch DR32.5	2,640	lf	150.00	396,000				
			26	34 inch DR32.5	7,920	lf	170.00	1,346,400				
			27	36 inch DR32.5	1,370	lf	185.00	253,450				
			28	42 inch DR32.5	3,910	lf	245.00	957,950				
			29	Mobilization (+/- 5%)				1,092,564				
			30	Unlisted Items (+/- 15%)	267,350			3,056,151				
					51							
				Subtotal				26,000,000				
				Contingencies (+/- 20%)				6,000,000				
				Field Cost - Waterways				32,000,000				
		153		Waterway Structures					11,000,000			
			1	Pipe Crossings, Roads: Pipe Dia 48" and less	48	ls	150,000.00	7,200,000				
			2	Pipe Crossings, Water/Railroads: Pipe Dia 36" and less	1	ls	500,000.00	500,000				
			3	Mobilization (+/- 5%)				385,000				
			4	Unlisted Items (+/- 15%)				1,215,000				
				Subtotal				9,300,000				
				Contingencies (+/- 20%)				1,700,000				
				Field Cost - Waterway Structures				11,000,000				
				FACILITATING SERVICES (2%)								
				INVESTIGATIONS (3%)								
				DESIGNS & SPECIFICATIONS (10%)								
				CONSTRUCTION SUPERVISION (12%)								
				OTHER COSTS (+/- 27%)							11,850,000	

CONSTRUCTION COST ESTIMATE

PROJECT: Central Valley Project	PREPARED BY: Regional Office, Sacramento, CA
DIVISION: West San Joaquin Division	ESTIMATE DATE: July 2007 (Revised after DEC)
UNIT: San Luis Unit -- Drainage System -- Westlands Water District-South	ESTIMATE TYPE: Feasibility
FEATURE: Drainage Feature Re-Evaluation Feasibility Study	PRICE LEVEL: April 2006

PROPERTY CLASS	IDENTIFIED PROPERTY	PLANT ACCOUNT	ITEM	DESCRIPTION	QUANTITY	UNIT	PRICE	AMOUNT	FIELD COST	TOTAL FIELD COST	NONCONTRACT COST	CONSTRUCTION COST
07	04			SOUTH DRAINAGE CONVEYANCE SYSTEM --These HDPE pipes						3,690,000	1,010,000	4,700,000
				take drain water from Reuse Areas A, B, and C to the regulating tank at								
				the treatment facility. Total Length = 12.12 miles. Pipe D = 8"								
		100		Land and Rights					270,000			
			1	Permanent Easements	29	Ac	2,100.00	60,900				
			2	Temporary Easements	110	Ac	1,470.00	161,700				
			3	Unlisted Items (+/- 5%)				7,400				
				Subtotal				230,000				
				Contingencies (+/- 15%)				40,000				
				Field Cost - Land and Rights				270,000				
		152		Waterways					2,900,000			
			1	Excavation	21,900	cy	4.50	98,550				
			2	Backfill	21,900	cy	3.00	65,700				
			3	Compacting backfill	6,270	cy	8.50	53,295				
			4	Excavation - Trench box	19,000	cy	15.00	285,000				
			5	Backfill - Trench box	18,000	cy	7.00	126,000				
			6	Compacting backfill - Trench box	8,570	cy	20.00	171,400				
			7	Unwatering	1	ls	150,000.00	150,000				
				Furnish and Lay the following HDPE Pipe								
			8	8 inch DR26	45,430	lf	16.50	749,595				
			9	8 inch DR21	18,560	lf	18.00	334,080				
			10	Mobilization (+/- 5%)				101,681				
			11	Unlisted Items (+/- 15%)				364,699				
				Subtotal				2,500,000				
				Contingencies (+/- 20%)				400,000				
				Field Cost - Waterways				2,900,000				

CONSTRUCTION COST ESTIMATE

PROJECT: Central Valley Project	PREPARED BY: Regional Office, Sacramento, CA
DIVISION: West San Joaquin Division	ESTIMATE DATE: July 2007 (Revised after DEC)
UNIT: San Luis Unit -- Drainage System -- Westlands Water District-South	ESTIMATE TYPE: Feasibility
FEATURE: Drainage Feature Re-Evaluation Feasibility Study	PRICE LEVEL: April 2006

PROPERTY CLASS	IDENTIFIED PROPERTY	PLANT ACCOUNT	ITEM	DESCRIPTION	QUANTITY	UNIT	PRICE	AMOUNT	FIELD COST	TOTAL FIELD COST	NONCONTRACT COST	CONSTRUCTION COST
07	04			SOUTH DRAINAGE CONVEYANCE SYSTEM (continued)								
		153		Waterway Structures					520,000			
			1	Pipe Crossings, Roads: Pipe Dia 24" and less	6	ls	60,000.00	360,000				
			2	Mobilization (+/- 5%)				18,000				
			3	Unlisted Items (+/- 15%)				52,000				
				Subtotal				430,000				
				Contingencies (+/- 20%)				90,000				
				Field Cost - Waterway Structures				520,000				
				FACILITATING SERVICES (2%)								
				INVESTIGATIONS (3%)								
				DESIGNS & SPECIFICATIONS (10%)								
				CONSTRUCTION SUPERVISION (12%)								
				OTHER COSTS (+/- 27%)							1,010,000	

CONSTRUCTION COST ESTIMATE

PROJECT: Central Valley Project	PREPARED BY: Regional Office, Sacramento, CA
DIVISION: West San Joaquin Division	ESTIMATE DATE: July 2007 (Revised after DEC)
UNIT: San Luis Unit -- Drainage System -- Westlands Water District-South	ESTIMATE TYPE: Feasibility
FEATURE: Drainage Feature Re-Evaluation Feasibility Study	PRICE LEVEL: April 2006

PROPERTY CLASS	IDENTIFIED PROPERTY	PLANT ACCOUNT	ITEM	DESCRIPTION	QUANTITY	UNIT	PRICE	AMOUNT	FIELD COST	TOTAL FIELD COST	NONCONTRACT COST	CONSTRUCTION COST
12				SPECIAL PLANTS						188,138,000	54,262,000	242,400,000
	01			WWD SOUTH - REUSE AREAS -- Three Reuse Areas (A, B, and C) total						29,600,000	8,400,000	38,000,000
				1,760 acres in size. Conveyance pipelines distribute drain water over								
				a reuse area and on-farm drain pipes collect drain water for delivery to								
				the reuse area pumping plants.								
		100		Land and Rights					8,500,000			
			1	Seasonal Crop Land - Fee	1,760	Ac	4,000.00	7,040,000				
			2	Unlisted Items (+/- 5%)				360,000				
				Subtotal				7,400,000				
				Contingencies (+/- 15%)				1,100,000				
				Field Cost - Land and Rights				8,500,000				
		152		Waterways					21,100,000			
				(1) Land Development					4,000,000			
			1	Land Smoothing and Re- Leveling	1,760	Ac	$500.00	880,000				
			2	Establish Initial Forage Crops; Seeding and Drilling	1,760	Ac	$1,000.00	1,760,000				
			3	Surface Drainage Ditch at field ends; (cutting a "v" notch with a blade)	45,430	lf	$2.00	90,860				
			4	Mobilization (+/- 5%)				136,543				
			5	Unlisted Items (+/- 15%)				432,597				
				Subtotal				3,300,000				
				Contingencies (+/- 20%)				700,000				
				Field Cost - (1) Land Development				4,000,000				

CONSTRUCTION COST ESTIMATE

PROJECT: Central Valley Project	PREPARED BY: Regional Office, Sacramento, CA
DIVISION: West San Joaquin Division	ESTIMATE DATE: July 2007 (Revised after DEC)
UNIT: San Luis Unit -- Drainage System -- Westlands Water District-South	ESTIMATE TYPE: Feasibility
FEATURE: Drainage Feature Re-Evaluation Feasibility Study	PRICE LEVEL: April 2006

PROPERTY CLASS	IDENTIFIED PROPERTY	PLANT ACCOUNT	ITEM	DESCRIPTION	QUANTITY	UNIT	PRICE	AMOUNT	FIELD COST	TOTAL FIELD COST	NONCONTRACT COST	CONSTRUCTION COST
12	01			WWD SOUTH - REUSE AREAS (continued)								
		152		Waterways (continued)								
				(2) Pipelines					6,600,000			
			1	6" dia. Alum gated pipe; 36" gate spacing (recess gates)	1,850	lf	$21.00	38,850				
			2	8" dia. Alum gated pipe; 36" gate spacing (recess gates)	32,010	lf	$24.00	768,240				
			3	10" dia. Alum gated pipe; 36" gate spacing (recess gates)	14,190	lf	$25.00	354,750				
			4	12" dia. Alum gated pipe; 36" gate spacing (recess gates)	9,350	lf	$33.00	308,550				
			5	8-inch dia. Aluminum; non-gated pipe	7,635	lf	$23.00	175,605				
			6	10-inch dia. Aluminum; non-gated pipe	2,970	lf	$24.00	71,280				
			7	12-inch dia. Aluminum; non-gated pipe	1,155	lf	$32.00	36,960				
				Polyethylene Riser Pipe and Gate Valve (assume DR32.5, 10 lf/ea min)								
			8	6-inch dia.	2	ea	$1,610.00	3,220				
			9	8-inch dia.	8	ea	$2,145.00	17,160				
			10	10-inch dia.	8	ea	$2,690.00	21,520				
			11	12-inch dia.	11	ea	$3,790.00	41,690				
				16-inch dia.	2	ea	$5,400.00	10,800				
			12	18-inch dia.	1	ea	$6,000.00	6,000				
				Buried Pipelines								
				8SDR32.5 HDPE pipe, F&I	5,000	lf	$14.50	72,500				
			13	10SDR32.5 HDPE pipe, F&I	3,960	lf	$19.00	75,240				
			14	12SDR32.5 HDPE pipe, F&I	5,720	lf	$29.00	165,880				
			15	16SDR32.5 HDPE pipe, F&I	4,450	lf	$40.00	178,000				
			16	18SDR32.5 HDPE pipe, F&I	3,520	lf	$50.00	176,000				
				Earthwork for Buried Pipelines (2:1 Slopes)								
			17	Excavation	63,400	cy	$4.50	285,300				
			18	Backfill	60,800	cy	$3.00	182,400				
			19	Select Fill; Bedding	765	cy	$55.00	42,075				
			20	Compacting Backfill	2,026	cy	$8.50	17,221				
				Tail Water Collection and Recycling								
			21	10SDR26 HDPE pipe, F&I	26,400	lf	$22.00	580,800				
			22	Excavation	91,200	cy	$4.50	410,400				
			23	Backfill	87,800	cy	$3.00	263,400				
			24	Compacting Backfill (85% proctor)	1,050	cy	$8.50	8,925				
			25	Select Fill; bedding	2,450	cy	$55.00	134,750				

CONSTRUCTION COST ESTIMATE

PROJECT: Central Valley Project	PREPARED BY: Regional Office, Sacramento, CA
DIVISION: West San Joaquin Division	ESTIMATE DATE: July 2007 (Revised after DEC)
UNIT: San Luis Unit -- Drainage System -- Westlands Water District-South	ESTIMATE TYPE: Feasibility
FEATURE: Drainage Feature Re-Evaluation Feasibility Study	PRICE LEVEL: April 2006

PROPERTY CLASS	IDENTIFIED PROPERTY	PLANT ACCOUNT	ITEM	DESCRIPTION	QUANTITY	UNIT	PRICE	AMOUNT	FIELD COST	TOTAL FIELD COST	NONCONTRACT COST	CONSTRUCTION COST
12	01			WWD SOUTH - REUSE AREAS (continued)								
		152		Waterways (continued)								
				(2) Pipelines (continued)								
				Valves / Fittings								
			26	Riser Pipe; 10SDR26 HDPE x 7 ft (assume 10' minimum)	7	ea	$220.00	1,540				
			27	10 inch check valve (20 psi)	7	ea	$15,000.00	105,000				
			28	Mobilization (+/- 5%)				227,703				
			29	Unlisted Items (+/- 15%)				718,241				
				Subtotal				5,500,000				
				Contingencies (+/- 20%)				1,100,000				
				Field Cost - (2) Pipelines				6,600,000				

CONSTRUCTION COST ESTIMATE

PROJECT: Central Valley Project	PREPARED BY: Regional Office, Sacramento, CA
DIVISION: West San Joaquin Division	ESTIMATE DATE: July 2007 (Revised after DEC)
UNIT: San Luis Unit -- Drainage System -- Westlands Water District-South	ESTIMATE TYPE: Feasibility
FEATURE: Drainage Feature Re-Evaluation Feasibility Study	PRICE LEVEL: April 2006

PROPERTY CLASS	IDENTIFIED PROPERTY	PLANT ACCOUNT	ITEM	DESCRIPTION	QUANTITY	UNIT	PRICE	AMOUNT	FIELD COST	TOTAL FIELD COST	NONCONTRACT COST	CONSTRUCTION COST
12	01			WWD SOUTH - REUSE AREAS (continued)								
		152		Waterways (continued)								
				(3) Reuse Area Tile Drains					10,500,000			
				Spaced Drains								
			1	Concrete Manholes, 48"x 14 ft	333	ea	$14,000.00	4,662,000				
			2	6-inch dia. tile drain, w/gravel envelope	299,260	lf	$5.00	1,496,300				
				Collector Drains								
			3	8-inch dia. tile drain, w/gravel envelope	15,960	lf	$6.00	95,760				
			4	10-inch dia. tile drain, w/gravel envelope	9,690	lf	$9.50	92,055				
			5	12-inch dia. tile drain, w/gravel envelope	5,460	lf	$10.50	57,330				
			6	15-inch dia. tile drain, w/gravel envelope	3,210	lf	$14.50	46,545				
			7	DOS-IR or Inline Water Level Control Valves, 8" x 14 ft	111	ea	$2,600.00	288,600				
			8	DOS-IR or Inline Water Level Control Valves, 6" x 14 ft	111	ea	$1,600.00	177,600				
			9	Drain ROW Shaping & Surface Repairs	765	Ac	$500.00	382,500				
			10	Mobilization (+/- 5%)				364,935				
			11	Unlisted Items (+/- 15%)				1,136,376				
				Subtotal				8,800,000				
				Contingencies (+/- 20%)				1,700,000				
				Field Cost - (3) Reuse Area Tile Drains				10,500,000				
				Field Cost - Waterways				21,100,000				
				FACILITATING SERVICES (2%)								
				INVESTIGATIONS (3%)								
				DESIGNS & SPECIFICATIONS (10%)								
				CONSTRUCTION SUPERVISION (12%)								
				OTHER COSTS (+/- 27%)							8,400,000	

CONSTRUCTION COST ESTIMATE

PROJECT: Central Valley Project	PREPARED BY: Regional Office, Sacramento, CA
DIVISION: West San Joaquin Division	ESTIMATE DATE: July 2007 (Revised after DEC)
UNIT: San Luis Unit -- Drainage System -- Westlands Water District-South	ESTIMATE TYPE: Feasibility
FEATURE: Drainage Feature Re-Evaluation Feasibility Study	PRICE LEVEL: April 2006

PROPERTY CLASS	IDENTIFIED PROPERTY	PLANT ACCOUNT	ITEM	DESCRIPTION	QUANTITY	UNIT	PRICE	AMOUNT	FIELD COST	TOTAL FIELD COST	NONCONTRACT COST	CONSTRUCTION COST
12	02			RO TREATMENT PLANT - This treatment plant handles the water from						8,376,000	2,124,000	10,500,000
				Areas A, B, and C. Rapid mix, flocculation, and filtration are included.								
		100		Land and Rights					16,000			
			1	Seasonal Crop Land - Fee	3	Ac	4,000.00	12,000				
			2	Unlisted Items (+/- 5%)				1,000				
				Subtotal				13,000				
				Contingencies (+/- 15%)				3,000				
				Field Cost - Land and Rights				16,000				
		130		Structures and Improvements					5,100,000			
			1	Concrete Pad for Pretreatment System	24	cy	1,350.00	32,400				
			2	Site Work	1	ls	53,300.00	53,300				
			4	Building	7,575	sf	250.00	1,893,750				
			5	Rapid Mix Tank	1	ls	27,600.00	27,600				
			6	Flocculation	1	ls	108,300.00	108,300				
			8	Filtration	1	ls	784,000.00	784,000				
			9	Location Factor for Fresno, CA (+/- 7.1% of items 2-8)				203,553				
			10	Mobilization (+/- 5%)				155,145				
			11	Unlisted Items (+/- 15%)				488,707				
			12	Allowance for Procurement Strategy (+/- 5%)				153,244				
				Subtotal				3,900,000				
				Contingencies (+/- 30%)				1,200,000				
				Field Cost - Structures and Improvements				5,100,000				

CONSTRUCTION COST ESTIMATE

PROJECT: Central Valley Project	PREPARED BY: Regional Office, Sacramento, CA
DIVISION: West San Joaquin Division	ESTIMATE DATE: July 2007 (Revised after DEC)
UNIT: San Luis Unit -- Drainage System -- Westlands Water District-South	ESTIMATE TYPE: Feasibility
FEATURE: Drainage Feature Re-Evaluation Feasibility Study	PRICE LEVEL: April 2006

PROPERTY CLASS	IDENTIFIED PROPERTY	PLANT ACCOUNT	ITEM	DESCRIPTION	QUANTITY	UNIT	PRICE	AMOUNT	FIELD COST	TOTAL FIELD COST	NONCONTRACT COST	CONSTRUCTION COST
12	02			RO TREATMENT PLANT (continued)								
		152		Waterways					1,600,000			
			1	Ferric Chloride Feed System	1	ls	106,100.00	106,100				
			2	Polyelectrolyte Feed System	1	ls	53,700.00	53,700				
			3	Antiscalant Feed System	1	ls	62,200.00	62,200				
			4	Membrane Elements	144	ea	750.00	108,000				
			5	Membrane Vessels/Trains	1	ls	158,900.00	158,900				
			6	Cartridge Filters	1	ls	25,100.00	25,100				
			7	Membrane Cleaning Equipment	1	ls	94,500.00	94,500				
			8	Contractor Engineering & Training	1	ls	125,800.00	125,800				
			9	Process Piping	1	ls	98,400.00	98,400				
			10	Yard Piping	1	ls	80,300.00	80,300				
			11	Location Factor for Fresno, CA (+/- 7.1% of above)				64,823				
			12	Mobilization (+/- 5%)				48,891				
			13	Unlisted Items (+/- 15%)				154,007				
			14	Allowance for Procurement Strategy (+/- 5%)				69,279				
				Subtotal				1,250,000				
				Contingencies (+/- 30%)				350,000				
				Field Cost - Waterways				1,600,000				

CONSTRUCTION COST ESTIMATE

PROJECT: Central Valley Project	PREPARED BY: Regional Office, Sacramento, CA
DIVISION: West San Joaquin Division	ESTIMATE DATE: July 2007 (Revised after DEC)
UNIT: San Luis Unit -- Drainage System -- Westlands Water District-South	ESTIMATE TYPE: Feasibility
FEATURE: Drainage Feature Re-Evaluation Feasibility Study	PRICE LEVEL: April 2006

PROPERTY CLASS	IDENTIFIED PROPERTY	PLANT ACCOUNT	ITEM	DESCRIPTION	QUANTITY	UNIT	PRICE	AMOUNT	FIELD COST	TOTAL FIELD COST	NONCONTRACT COST	CONSTRUCTION COST
12	02			RO TREATMENT PLANT (continued)								
		160		Pumps and Prime Movers					580,000			
			1	Forwarding & High Pressure Pumps	1	ls	330,900.00	330,900				
			2	Location Factor for Fresno, CA (+/- 7.1% of above)				23,494				
			3	Mobilization (+/- 5%)				17,720				
			4	Unlisted Items (+/- 15%)				55,817				
			5	Allowance for Procurement Strategy (+/- 5%)				22,069				
				Subtotal				450,000				
				Contingencies (+/- 30%)				130,000				
				Field Cost - Pumps and Prime Movers				580,000				
		170		Accessory Electrical Equipment					430,000			
			1	Electrical Cost	1	ls	246,100.00	246,100				
			2	Location Factor for Fresno, CA (+/- 7.1% of above)				17,473				
			3	Mobilization (+/- 5%)				13,179				
			4	Unlisted Items (+/- 15%)				41,513				
			5	Allowance for Procurement Strategy (+/- 5%)				11,735				
				Subtotal				330,000				
				Contingencies (+/- 30%)				100,000				
				Field Cost - Accessory Electrical Equipment				430,000				

CONSTRUCTION COST ESTIMATE

PROJECT: Central Valley Project	PREPARED BY: Regional Office, Sacramento, CA
DIVISION: West San Joaquin Division	ESTIMATE DATE: July 2007 (Revised after DEC)
UNIT: San Luis Unit -- Drainage System -- Westlands Water District-South	ESTIMATE TYPE: Feasibility
FEATURE: Drainage Feature Re-Evaluation Feasibility Study	PRICE LEVEL: April 2006

PROPERTY CLASS	IDENTIFIED PROPERTY	PLANT ACCOUNT	ITEM	DESCRIPTION	QUANTITY	UNIT	PRICE	AMOUNT	FIELD COST	TOTAL FIELD COST	NONCONTRACT COST	CONSTRUCTION COST
12	02			RO TREATMENT PLANT (continued)								
		180		Installed Supervisory Control System					650,000			
			1	Instrumentation and Controls	1	ls	366,600.00	366,600				
			2	Location Factor for Fresno, CA (+/- 7.1% of above)				26,029				
			3	Mobilization (+/- 5%)				19,631				
			4	Unlisted Items (+/- 15%)				61,839				
			5	Allowance for Procurement Strategy (+/- 5%)				25,901				
				Subtotal				500,000				
				Contingencies (+/- 30%)				150,000				
				Field Cost - Installed Supervisory Control System				650,000				
				FACILITATING SERVICES (2%)								
				INVESTIGATIONS (3%)								
				DESIGNS & SPECIFICATIONS (10%)								
				CONSTRUCTION SUPERVISION (12%)								
				OTHER COSTS (+/- 27%)							2,124,000	

CONSTRUCTION COST ESTIMATE

PROJECT: Central Valley Project	PREPARED BY: Regional Office, Sacramento, CA
DIVISION: West San Joaquin Division	ESTIMATE DATE: July 2007 (Revised after DEC)
UNIT: San Luis Unit -- Drainage System -- Westlands Water District-South	ESTIMATE TYPE: Feasibility
FEATURE: Drainage Feature Re-Evaluation Feasibility Study	PRICE LEVEL: April 2006

PROPERTY CLASS	IDENTIFIED PROPERTY	PLANT ACCOUNT	ITEM	DESCRIPTION	QUANTITY	UNIT	PRICE	AMOUNT	FIELD COST	TOTAL FIELD COST	NONCONTRACT COST	CONSTRUCTION COST
12	03			WWD SOUTH Se BIOTREATMENT PLANT - This system treats the						31,180,000	8,820,000	40,000,000
				water from Areas A, B, and C.								
		100		Land and Rights					10,000			
			1	Seasonal Crop Land - Fee	2	Ac	4,000.00	8,000				
			2	Unlisted Items (+/- 5%)				400				
				Subtotal				8,400				
				Contingencies (+/- 15%)				1,600				
				Field Cost - Land and Rights				10,000				
		130		Structures and Improvements					17,840,000			
				(1) General Site Work					1,200,000			
			1	Paving	1,400	sy	60.00	84,000				
			2	Seeding	22,000	sy	2.00	44,000				
			3	Sod	4	msf	2,400.00	9,600				
				Security								
			4	Perimeter Fence, 8' Chain Link	1,220	lf	40.00	48,800				
			5	Double Swing Gate, 8'x20'	2	ea	9,000.00	18,000				
			6	Camera and Monitor	1	ea	8,500.00	8,500				
			7	Additional Cameras	3	ea	5,000.00	15,000				
			8	Auto Light Features on Cameras	4	ea	6,500.00	26,000				
			9	Yard Lighting, on dual switches (light/motion and manual) on posts	12	ea	3,500.00	42,000				
				Earthwork, main structures 3' deep in-ground								
			10	Site clearing and grubbing	2	acre	6,000.00	12,000				
			11	Excavation, all except bioreactors and piping gallery	1,345	cy	12.00	16,140				
			12	Excavation, bioreactors and piping gallery	1,445	cy	12.00	17,340				
			13	Offsite disposal of waste material	2,800	cy	35.00	98,000				
				Dewatering for Clarifier Waffle Bottom Slab, 3' Dewatering								
			14	Gas Powered Pump, 4 Months Rental and Operation	122	day	2,500.00	305,000				
			15	12 Well Points, 2" Steel Pipe driven 20 feet deep	240	lf	45.00	10,800				
			16	Suction Piping, 3" Plastic	150	lf	35.00	5,250				
			17	Discharge Piping, 4" Plastic	150	lf	60.00	9,000				

CONSTRUCTION COST ESTIMATE

PROJECT: Central Valley Project	PREPARED BY: Regional Office, Sacramento, CA
DIVISION: West San Joaquin Division	ESTIMATE DATE: July 2007 (Revised after DEC)
UNIT: San Luis Unit -- Drainage System -- Westlands Water District-South	ESTIMATE TYPE: Feasibility
FEATURE: Drainage Feature Re-Evaluation Feasibility Study	PRICE LEVEL: April 2006

PROPERTY CLASS	IDENTIFIED PROPERTY	PLANT ACCOUNT	ITEM	DESCRIPTION	QUANTITY	UNIT	PRICE	AMOUNT	FIELD COST	TOTAL FIELD COST	NONCONTRACT COST	CONSTRUCTION COST
12	03			WWD SOUTH Se BIOTREATMENT PLANT (continued)								
		130		Structures and Improvements (continued)								
				(1) General Site Work (continued)								
			18	Mobilization (+/- 5%)				38,472				
			19	Unlisted Items (+/- 15%)				121,185				
			20	Allowance for Procurement Strategy (+/- 5%)				50,913				
				Subtotal				980,000				
				Contingencies (+/- 25%)				220,000				
				Field Cost - (1) General Site Work				1,200,000				
				(2) Administration Building					1,250,000			
			1	Geotextile Fabric to Separate Native and Structural Fill	2,926	sf	0.50	1,463				
			2	Structural Fill Below Structures (imported material)	55	cy	60.00	3,300				
			3	Foundation	45	cy	700.00	31,500				
			4	Slab on grade	70	cy	600.00	42,000				
			5	Metal Bldg 14' eave, 40' span	2,480	sf	45.00	111,600				
			6	Roofing underlayment, allocation	30	sq	110.00	3,300				
			7	Roofing, Aluminum Standing Seam, anodized	30	sq	720.00	21,600				
			8	Overhanging roof w/ soffit	205	sf	50.00	10,250				
			9	Doors HM Single	3	ea	1,300.00	3,900				
			10	Doors HM Double	2	ea	2,500.00	5,000				
			11	Doors, coiling 10'	1	ea	2,000.00	2,000				
			12	Windows, allocation	4	ea	4,000.00	16,000				
			13	Doors, interior w/ safety glass	7	ea	450.00	3,150				
			14	Interior Walls - Gypsum 24" metal studs	810	sf	10.00	8,100				
			15	Interior Walls - 8" CMU, painted	540	sf	12.00	6,480				
			16	Suspended Ceiling, complete	2,480	sf	10.00	24,800				
			17	Ceiling GWB - Fire Rated	2,480	sf	5.00	12,400				
			18	Flooring System, allocation for high traffic carpet or tile	2,480	sf	20.00	49,600				
			19	Wall Tile, bathrooms	320	sf	40.00	12,800				
			20	API Panels	2,040	sf	20.00	40,800				
			21	Block Veneer to 4' high, precast cap, estimate	815	sf	25.00	20,375				

CONSTRUCTION COST ESTIMATE

PROJECT: Central Valley Project	PREPARED BY: Regional Office, Sacramento, CA
DIVISION: West San Joaquin Division	ESTIMATE DATE: July 2007 (Revised after DEC)
UNIT: San Luis Unit -- Drainage System -- Westlands Water District-South	ESTIMATE TYPE: Feasibility
FEATURE: Drainage Feature Re-Evaluation Feasibility Study	PRICE LEVEL: April 2006

PROPERTY CLASS	IDENTIFIED PROPERTY	PLANT ACCOUNT	ITEM	DESCRIPTION	QUANTITY	UNIT	PRICE	AMOUNT	FIELD COST	TOTAL FIELD COST	NONCONTRACT COST	CONSTRUCTION COST
12	03			WWD SOUTH Se BIOTREATMENT PLANT (continued)								
		130		Structures and Improvements (continued)								
				(2) Administration Building (continued)								
			22	Laboratory Cabinets, basework	15	lf	350.00	5,250				
			23	Laboratory Cabinets, basework	20	lf	350.00	7,000				
			24	Laboratory Countertop, acidproof	70	sf	80.00	5,600				
			25	Fumehood, Cole Parmer 48" installed	1	ls	13,000.00	13,000				
			26	Lab furniture	485	sf	100.00	48,500				
			27	Lockers, single tier	8	ea	370.00	2,960				
			28	Lab Sink	1	ea	3,100.00	3,100				
			29	Eye/face wash combo	1	ea	1,200.00	1,200				
			30	Emergency Shower	1	ea	2,500.00	2,500				
			31	Fire Alarm Control Panel - 8 zone	1	ea	4,000.00	4,000				
			32	Battery Rack	1	ea	1,500.00	1,500				
			33	Smoke Detectors	6	ea	250.00	1,500				
			34	Fire Alarm Horn	2	ea	130.00	260				
			35	Fire Extinguishers, CO2 20lb	4	ea	365.00	1,460				
			36	Fire Extinguishers, 100 lb wheeled	1	ea	365.00	365				
			37	HVAC, per sf	2,480	sf	20.00	49,600				
			38	Plumbing, per sf	2,480	sf	10.00	24,800				
			39	Electrical, per sf	2,480	sf	20.00	49,600				
			40	Electrical, additional for well pump and generator	1	ls	40,000.00	40,000				
				Ancillary Facilities To Administration Building								
			41	75 kW Propane Generator	1	ea	40,000.00	40,000				
			42	Auto-Transfer Switch (provided by generator supplier)	1	ea	10,500.00	10,500				
			43	Installation of backup power equipment)+/- 30% of above items	1	ls	15,000.00	15,000				
				New Well								
			44	Driller Mobilization	1	ea	4,000.00	4,000				
			45	8" Well Construction	200	lf	45.00	9,000				
			46	Well Pump, installed w/ valving and controls	1	ea	10,000.00	10,000				
			47	Piping, 2"	100	lf	45.00	4,500				
			48	Reverse Osmosis for Potable Water, in Admin Building	1	ea	10,000.00	10,000				

CONSTRUCTION COST ESTIMATE

PROJECT: Central Valley Project	PREPARED BY: Regional Office, Sacramento, CA
DIVISION: West San Joaquin Division	ESTIMATE DATE: July 2007 (Revised after DEC)
UNIT: San Luis Unit -- Drainage System -- Westlands Water District-South	ESTIMATE TYPE: Feasibility
FEATURE: Drainage Feature Re-Evaluation Feasibility Study	PRICE LEVEL: April 2006

PROPERTY CLASS	IDENTIFIED PROPERTY	PLANT ACCOUNT	ITEM	DESCRIPTION	QUANTITY	UNIT	PRICE	AMOUNT	FIELD COST	TOTAL FIELD COST	NONCONTRACT COST	CONSTRUCTION COST
12	03			WWD SOUTH Se BIOTREATMENT PLANT (continued)								
		130		Structures and Improvements (continued)								
				(2) Administration Building (continued)								
			49	Mobilization (+/- 5%)				39,781				
			50	Unlisted Items (+/- 15%)				125,309				
			51	Allowance for Procurement Strategy (+/- 5%)				39,297				
				Subtotal				1,000,000				
				Contingencies (+/- 25%)				250,000				
				Field Cost - (2) Administration Building				1,250,000				
				(3) Solids Dewatering Building					2,300,000			
			1	Geotextile Fabric to Separate Native and Structural Fill	2,026	sf	0.50	1,013				
			2	Structural Fill Below Structures (imported material)	55	cy	60.00	3,300				
			3	Pile Installation, 50 ton, 60 ft	660	lf	65.00	42,900				
			4	Foundation	30	cy	700.00	21,000				
			5	Slab on grade	55	cy	600.00	33,000				
			6	Metal Bldg 20' eave, 40' span	2,000	sf	50.00	100,000				
			7	Roofing underlayment, allocation	25	sq	110.00	2,750				
			8	Roofing, Aluminum Standing Seam, anodized	25	sq	720.00	18,000				
			9	Interior Walls - 8" CMU, painted	360	sf	12.00	4,320				
			10	API Panels	3,600	sf	13.00	46,800				
			11	Overhanging roof w/ soffit	180	sf	50.00	9,000				
			12	Belt Presses - Furnish to Site	1	ea	500,000.00	500,000				
			13	Belt Press - Install +/- 30% of Furnish	1	ls	150,000.00	150,000				
			14	Elevated Walkway	400	sf	60.00	24,000				
			15	Polymer System, installed	1	ea	30,000.00	30,000				
			16	Monorail - 3 ton, 30' span, installed	1	ea	30,000.00	30,000				
			17	Conveyors, installed	2	ea	60,000.00	120,000				
			18	HVAC, per sf	2,000	sf	20.00	40,000				
			19	Plumbing, per sf	2,000	sf	10.00	20,000				
			20	Mechanical Piping, allocation	1	ls	100,000.00	100,000				
			21	Electrical, allocation +/- 12% of above items	1	ls	150,000.00	150,000				

CONSTRUCTION COST ESTIMATE

PROJECT: Central Valley Project	PREPARED BY: Regional Office, Sacramento, CA
DIVISION: West San Joaquin Division	ESTIMATE DATE: July 2007 (Revised after DEC)
UNIT: San Luis Unit -- Drainage System -- Westlands Water District-South	ESTIMATE TYPE: Feasibility
FEATURE: Drainage Feature Re-Evaluation Feasibility Study	PRICE LEVEL: April 2006

PROPERTY CLASS	IDENTIFIED PROPERTY	PLANT ACCOUNT	ITEM	DESCRIPTION	QUANTITY	UNIT	PRICE	AMOUNT	FIELD COST	TOTAL FIELD COST	NONCONTRACT COST	CONSTRUCTION COST
12	03			WWD SOUTH Se BIOTREATMENT PLANT (continued)								
		130		Structures and Improvements (continued)								
				(3) Solids Dewatering Building (continued)								
			22	Fire Extinguishers, CO2 20lb	3	ea	365.00	1,095				
			23	Mobilization (+/- 5%)				72,359				
			24	Unlisted Items (+/- 15%)				227,931				
			25	Allowance for Procurement Strategy (+/- 5%)				102,533				
				Subtotal				1,850,000				
				Contingencies (+/- 25%)				450,000				
				Field Cost - (3) Solids Dewatering Building				2,300,000				
				(4) Mechanical Building					1,500,000			
			1	Geotextile Fabric to Separate Native and Structural Fill	3,576	sf	0.50	1,788				
			2	Structural Fill Below Structures (imported material)	65	cy	60.00	3,900				
			3	Pile Installation, 50 ton, 60 ft	900	lf	65.00	58,500				
			4	Foundation	50	cy	700.00	35,000				
			5	Formwork	225	sf	25.00	5,625				
			6	Rebar #5 12"OC/EWEF	10	ton	3,500.00	35,000				
			7	Concrete Material	175	cy	190.00	33,250				
			8	Concrete Labor	175	cy	135.00	23,625				
			9	Metal Bldg 20' eave, 50' span	3,100	sf	50.00	155,000				
			10	Roofing underlayment, allocation	35	sq	110.00	3,850				
			11	Roofing, Aluminum Standing Seam, anodized	35	sq	720.00	25,200				
			12	API Panels	4,480	sf	13.00	58,240				
			13	Overhanging roof w/ soffit	225	sf	50.00	11,250				
			14	Interior Walls - 8" CMU, painted	480	sf	12.00	5,760				
			15	Doors HM Single	3	ea	1,300.00	3,900				
			16	Doors, coiling 10'	2	ea	2,000.00	4,000				
			17	Windows, allocation	2	ea	4,000.00	8,000				
			18	Doors, interior w/ safety glass	2	ea	450.00	900				
			19	HVAC Mech Room, per sf	3,100	sf	20.00	62,000				
			20	HVAC Pipe Gallery, per sf	2,380	sf	20.00	47,600				

CONSTRUCTION COST ESTIMATE

PROJECT: Central Valley Project	PREPARED BY: Regional Office, Sacramento, CA
DIVISION: West San Joaquin Division	ESTIMATE DATE: July 2007 (Revised after DEC)
UNIT: San Luis Unit -- Drainage System -- Westlands Water District-South	ESTIMATE TYPE: Feasibility
FEATURE: Drainage Feature Re-Evaluation Feasibility Study	PRICE LEVEL: April 2006

PROPERTY CLASS	IDENTIFIED PROPERTY	PLANT ACCOUNT	ITEM	DESCRIPTION	QUANTITY	UNIT	PRICE	AMOUNT	FIELD COST	TOTAL FIELD COST	NONCONTRACT COST	CONSTRUCTION COST
12	03			WWD SOUTH Se BIOTREATMENT PLANT (continued)								
		130		Structures and Improvements (continued)								
				(4) Mechanical Building (continued)								
			21	Plumbing, per sf	3,100	sf	10.00	31,000				
			22	Electrical standard structure, per sf	3,100	sf	20.00	62,000				
			23	Fire Extinguishers, CO2 20lb	6	ea	365.00	2,190				
			24	Foul Air Blowers, 3,900 cfm @ 12 inches	2	ea	9,000.00	18,000				
			25	Installation, +/- 30% of above	1	ls	5,400.00	5,400				
			26	Aeration Blowers, 800 cfm @ 8 psig	2	ea	35,000.00	70,000				
			27	Installation, +/- 30% of above	1	ls	21,000.00	21,000				
			28	Flow Control Valve	1	ea	11,500.00	11,500				
			29	Aeration Diffuser System, installed	535	ea	85.00	45,475				
			30	Instrument Air Compressor, 5 hp	1	ea	4,000.00	4,000				
			31	Installation, +/- 30% of above	1	ls	1,200.00	1,200				
			32	Feed Tank, 8400 gal linear PE	1	ea	40,000.00	40,000				
			33	Installation, +/- 30% of above	1	ls	12,000.00	12,000				
			34	Utility Water / Belt Press Wash Water, ~100 gpm @125psig	2	ea	15,000.00	30,000				
			35	Installation, +/- 30% of above	1	ls	9,000.00	9,000				
				Supply / Exhaust Fans								
			36	Pipe Gallery (40,000 cfm)	2	ea	4,000.00	8,000				
			37	Mech Room (10,000 cfm)	2	ea	1,650.00	3,300				
			38	Solids Dewatering (21,000 cfm)	2	ea	2,500.00	5,000				
			39	Mobilization (+/- 5%)				48,073				
			40	Unlisted Items (+/- 15%)				151,429				
			41	Allowance for Procurement Strategy (+/- 5%)				39,046				
				Subtotal				1,200,000				
				Contingencies (+/- 25%)				300,000				
				Field Cost - (4) Mechanical Building				1,500,000				

CONSTRUCTION COST ESTIMATE

PROJECT: Central Valley Project	PREPARED BY: Regional Office, Sacramento, CA
DIVISION: West San Joaquin Division	ESTIMATE DATE: July 2007 (Revised after DEC)
UNIT: San Luis Unit -- Drainage System -- Westlands Water District-South	ESTIMATE TYPE: Feasibility
FEATURE: Drainage Feature Re-Evaluation Feasibility Study	PRICE LEVEL: April 2006

PROPERTY CLASS	IDENTIFIED PROPERTY	PLANT ACCOUNT	ITEM	DESCRIPTION	QUANTITY	UNIT	PRICE	AMOUNT	FIELD COST	TOTAL FIELD COST	NONCONTRACT COST	CONSTRUCTION COST
12	03			WWD SOUTH Se BIOTREATMENT PLANT (continued)								
		130		Structures and Improvements (continued)								
				(5) Bioreactor					7,900,000			
			1	Geotextile Fabric to Separate Native and Structural Fill	10,800	sf	0.50	5,400				
			2	Structural Fill Below Structures (imported material)	200	cy	60.00	12,000				
			3	Pile Installation, 50 ton, 60 ft	17,040	lf	65.00	1,107,600				
				Slab on Grade - Pipe Gallery								
			4	Formwork	225	sf	25.00	5,625				
			5	Rebar #8-6"OC EW/EF	20	ton	3,500.00	70,000				
			6	Waterstop	225	lf	15.00	3,375				
			7	Concrete Material	175	cy	190.00	33,250				
			8	Concrete Labor	175	cy	135.00	23,625				
				Elevated Slab - Pipe Gallery								
			9	Metal Decking	2,550	sf	25.00	63,750				
			10	Structural Steel (W 12x26 - 30'L @ 10' OC)	225	lf	55.00	12,375				
			11	Formwork	30	sf	25.00	750				
			12	Rebar #4 12"OC EW	2	ton	3,500.00	7,000				
			13	Concrete Material	65	cy	190.00	12,350				
			14	Concrete Labor	65	cy	135.00	8,775				
				Slab on Grade - Bioreactors								
			15	Formwork	2,100	sf	25.00	52,500				
			16	Rebar #8-6"OC EW/EF	70	ton	3,500.00	245,000				
			17	Waterstop	700	lf	15.00	10,500				
			18	Concrete Material	840	cy	190.00	159,600				
			19	Concrete Labor	840	cy	135.00	113,400				
			20	Concrete Liner Material	5,120	sf	10.00	51,200				
				Long Walls - Bioreactors								
			21	Formwork	26,400	sf	25.00	660,000				
			22	Rebar #8-6"OC EW/EF	120	ton	3,500.00	420,000				
			23	Waterstop	660	lf	15.00	9,900				
			24	Concrete Material	1,465	cy	190.00	278,350				
			25	Concrete Labor	1,465	cy	135.00	197,775				
			26	Concrete Liner Material	5,120	sf	10.00	51,200				

CONSTRUCTION COST ESTIMATE

PROJECT: Central Valley Project	PREPARED BY: Regional Office, Sacramento, CA
DIVISION: West San Joaquin Division	ESTIMATE DATE: July 2007 (Revised after DEC)
UNIT: San Luis Unit -- Drainage System -- Westlands Water District-South	ESTIMATE TYPE: Feasibility
FEATURE: Drainage Feature Re-Evaluation Feasibility Study	PRICE LEVEL: April 2006

PROPERTY CLASS	IDENTIFIED PROPERTY	PLANT ACCOUNT	ITEM	DESCRIPTION	QUANTITY	UNIT	PRICE	AMOUNT	FIELD COST	TOTAL FIELD COST	NONCONTRACT COST	CONSTRUCTION COST
12	03			WWD SOUTH Se BIOTREATMENT PLANT (continued)								
		130		Structures and Improvements (continued)								
				(5) Bioreactor (continued)								
				Short Walls - Bioreactors								
			27	Formwork	21,650	sf	25.00	541,250				
			28	Rebar #8-6"OC EW/EF	100	ton	3,500.00	350,000				
			29	Waterstop	530	lf	15.00	7,950				
			30	Concrete Material	1,200	cy	190.00	228,000				
			31	Concrete Labor	1,200	cy	135.00	162,000				
			32	Concrete Liner Material	4,100	sf	10.00	41,000				
				End Wall - Gallery Room								
			33	Formwork	1,000	sf	25.00	25,000				
			34	Rebar #5-12"OC EW/EF	1	ton	3,500.00	3,500				
			35	Waterstop	55	lf	15.00	825				
			36	Concrete Material	30	cy	190.00	5,700				
			37	Concrete Labor	30	cy	135.00	4,050				
			38	Stairway to Top of Bioreactor Gallery Roof	1	ea	15,000.00	15,000				
			39	Railing on top of Bioreactors Roofs	60	lf	145.00	8,700				
			40	Mobilization (+/- 5%)				250,414				
			41	Unlisted Items (+/- 15%)				788,803				
			42	Allowance for Procurement Strategy (+/- 5%)				252,508				
				Subtotal				6,300,000				
				Contingencies (+/- 25%)				1,600,000				
				Field Cost - (5) Bioreactor				7,900,000				
				(6) Clarifier					800,000			
			1	Geotextile Fabric to Separate Native and Structural Fill	1,966	sf	0.50	983				
			2	Structural Fill Below Structures (imported material)	35	cy	60.00	2,100				
			3	Pile Installation, 50 ton, 60 ft	2,160	lf	65.00	140,400				
				Slab on Grade - Clarifier								
			4	Formwork	395	sf	25.00	9,875				
			5	Rebar #6-12"OC EW/EF	5	ton	3,500.00	17,500				

CONSTRUCTION COST ESTIMATE

PROJECT: Central Valley Project	PREPARED BY: Regional Office, Sacramento, CA
DIVISION: West San Joaquin Division	ESTIMATE DATE: July 2007 (Revised after DEC)
UNIT: San Luis Unit -- Drainage System -- Westlands Water District-South	ESTIMATE TYPE: Feasibility
FEATURE: Drainage Feature Re-Evaluation Feasibility Study	PRICE LEVEL: April 2006

PROPERTY CLASS	IDENTIFIED PROPERTY	PLANT ACCOUNT	ITEM	DESCRIPTION	QUANTITY	UNIT	PRICE	AMOUNT	FIELD COST	TOTAL FIELD COST	NONCONTRACT COST	CONSTRUCTION COST
12	03			WWD SOUTH Se BIOTREATMENT PLANT (continued)								
		130		Structures and Improvements (continued)								
				(6) Clarifier (continued)								
			6	Waterstop	160	lf	15.00	2,400				
			7	Concrete Material	145	cy	190.00	27,550				
			8	Concrete Labor	145	cy	135.00	19,575				
			9	Concrete Liner Material	1,600	sf	10.00	16,000				
				Walls - Clarifier								
			10	Formwork	4,400	sf	25.00	110,000				
			11	Rebar #6-10"OC EW/EF	5	ton	3,500.00	17,500				
			12	Waterstop	140	lf	15.00	2,100				
			13	Concrete Material	160	cy	190.00	30,400				
			14	Concrete Labor	160	cy	135.00	21,600				
			15	Concrete Liner Material	2,550	sf	10.00	25,500				
			16	FRP Cover	1,600	sf	40.00	64,000				
			17	Mobilization (+/- 5%)				25,374				
			18	Unlisted Items (+/- 15%)				79,929				
			19	Allowance for Procurement Strategy (+/- 5%)				27,214				
				Subtotal				640,000				
				Contingencies (+/- 25%)				160,000				
				Field Cost - (6) Clarifier				800,000				
				(7) Backwash Tank					770,000			
			1	Geotextile Fabric to Separate Native and Structural Fill	1,966	sf	0.50	983				
			2	Structural Fill Below Structures (imported material)	75	cy	60.00	4,500				
			3	Pile Installation, 50 ton, 60 ft	1,920	lf	65.00	124,800				
				Slab on Grade - Backwash Tank								
			4	Formwork	395	sf	25.00	9,875				
			5	Rebar #6-12"OC EW/EF	5	ton	3,500.00	17,500				
			6	Waterstop	160	lf	15.00	2,400				
			7	Concrete Material	145	cy	190.00	27,550				
			8	Concrete Labor	145	cy	135.00	19,575				

CONSTRUCTION COST ESTIMATE

PROJECT: Central Valley Project	PREPARED BY: Regional Office, Sacramento, CA
DIVISION: West San Joaquin Division	ESTIMATE DATE: July 2007 (Revised after DEC)
UNIT: San Luis Unit -- Drainage System -- Westlands Water District-South	ESTIMATE TYPE: Feasibility
FEATURE: Drainage Feature Re-Evaluation Feasibility Study	PRICE LEVEL: April 2006

PROPERTY CLASS	IDENTIFIED PROPERTY	PLANT ACCOUNT	ITEM	DESCRIPTION	QUANTITY	UNIT	PRICE	AMOUNT	FIELD COST	TOTAL FIELD COST	NONCONTRACT COST	CONSTRUCTION COST
12	03			WWD SOUTH Se BIOTREATMENT PLANT (continued)								
		130		Structures and Improvements (continued)								
				(7) Backwash Tank (continued)								
			9	Concrete Liner Material	1,600	sf	10.00	16,000				
				Walls - Backwash Tank								
			10	Formwork	5,900	sf	25.00	147,500				
			11	Rebar #6-10"OC EW/EF	5	ton	3,500.00	17,500				
			12	Waterstop	150	lf	15.00	2,250				
			13	Concrete Material	220	cy	190.00	41,800				
			14	Concrete Labor	220	cy	135.00	29,700				
			15	Concrete Liner Material	2,550	sf	10.00	25,500				
			16	Mobilization (+/- 5%)				24,372				
			17	Unlisted Items (+/- 15%)				76,771				
			18	Allowance for Procurement Strategy (+/- 5%)				31,425				
				Subtotal				620,000				
				Contingencies (+/- 25%)				150,000				
				Field Cost - (7) Backwash Tank				770,000				
				(8) Feed Tank					250,000			
			1	Geotextile Fabric to Separate Native and Structural Fill	316	sf	0.50	158				
			2	Structural Fill Below Structures (imported material)	5	cy	60.00	300				
			3	Pile Installation, 50 ton, 60 ft	420	lf	65.00	27,300				
				Slab on Grade - Feed Tank								
			4	Formwork	160	sf	25.00	4,000				
			5	Rebar #6-12"OC EW/EF	1	ton	3,500.00	3,500				
			6	Waterstop	65	lf	15.00	975				
			7	Concrete Material	20	cy	190.00	3,800				
			8	Concrete Labor	20	cy	135.00	2,700				
			9	Concrete Liner Material	255	sf	10.00	2,550				

CONSTRUCTION COST ESTIMATE

PROJECT: Central Valley Project	PREPARED BY: Regional Office, Sacramento, CA
DIVISION: West San Joaquin Division	ESTIMATE DATE: July 2007 (Revised after DEC)
UNIT: San Luis Unit -- Drainage System -- Westlands Water District-South	ESTIMATE TYPE: Feasibility
FEATURE: Drainage Feature Re-Evaluation Feasibility Study	PRICE LEVEL: April 2006

PROPERTY CLASS	IDENTIFIED PROPERTY	PLANT ACCOUNT	ITEM	DESCRIPTION	QUANTITY	UNIT	PRICE	AMOUNT	FIELD COST	TOTAL FIELD COST	NONCONTRACT COST	CONSTRUCTION COST
12	03			WWD SOUTH Se BIOTREATMENT PLANT (continued)								
		130		Structures and Improvements (continued)								
				(8) Feed Tank (continued)								
				Walls - Feed Tank								
			10	Formwork	2,260	sf	25.00	56,500				
			11	Rebar #6-10"OC EW/EF	3	ton	3,500.00	10,500				
			12	Waterstop	60	lf	15.00	900				
			13	Concrete Material	65	cy	190.00	12,350				
			14	Concrete Labor	65	cy	135.00	8,775				
			15	Concrete Liner Material	1,000	sf	10.00	10,000				
			16	FRP Cover	255	sf	40.00	10,200				
			17	Mobilization (+/- 5%)				7,725				
			18	Unlisted Items (+/- 15%)				24,335				
			19	Allowance for Procurement Strategy (+/- 5%)				8,432				
				Subtotal				195,000				
				Contingencies (+/- 25%)				55,000				
				Field Cost - (8) Feed Tank				250,000				
				(9) Oxidation Tank					1,200,000			
			1	Geotextile Fabric to Separate Native and Structural Fill	3,320	sf	0.50	1,660				
			2	Structural Fill Below Structures (imported material)	60	cy	60.00	3,600				
			3	Pile Installation, 50 ton, 60 ft	3,660	lf	65.00	237,900				
				Slab on Grade - Oxidation Tank								
			4	Formwork	525	sf	25.00	13,125				
			5	Rebar #6-12"OC EW/EF	10	ton	3,500.00	35,000				
			6	Waterstop	210	lf	15.00	3,150				
			7	Concrete Material	260	cy	190.00	49,400				
			8	Concrete Labor	260	cy	135.00	35,100				
			9	Concrete Liner Material	1,135	sf	10.00	11,350				

CONSTRUCTION COST ESTIMATE

PROJECT: Central Valley Project	PREPARED BY: Regional Office, Sacramento, CA
DIVISION: West San Joaquin Division	ESTIMATE DATE: July 2007 (Revised after DEC)
UNIT: San Luis Unit -- Drainage System -- Westlands Water District-South	ESTIMATE TYPE: Feasibility
FEATURE: Drainage Feature Re-Evaluation Feasibility Study	PRICE LEVEL: April 2006

PROPERTY CLASS	IDENTIFIED PROPERTY	PLANT ACCOUNT	ITEM	DESCRIPTION	QUANTITY	UNIT	PRICE	AMOUNT	FIELD COST	TOTAL FIELD COST	NONCONTRACT COST	CONSTRUCTION COST
12	03			WWD SOUTH Se BIOTREATMENT PLANT (continued)								
		130		Structures and Improvements (continued)								
				(9) Oxidation Tank (continued)								
				Walls - Oxidation Tank								
			10	Formwork	8,170	sf	25.00	204,250				
			11	Rebar #6-10"OC EW/EF	15	ton	3,500.00	52,500				
			12	Waterstop	200	lf	15.00	3,000				
			13	Concrete Material	300	cy	190.00	57,000				
			14	Concrete Labor	300	cy	135.00	40,500				
			15	Concrete Liner Material	2,150	sf	10.00	21,500				
			16	Mobilization (+/- 5%)				38,452				
			17	Unlisted Items (+/- 15%)				121,123				
			18	Allowance for Procurement Strategy (+/- 5%)				51,390				
				Subtotal				980,000				
				Contingencies (+/- 25%)				220,000				
				Field Cost - (9) Oxidation Tank				1,200,000				
				(10) Biofilter - Odor Control Unit					390,000			
				Perimeter Slab for Stem								
			1	Formwork	1,320	sf	25.00	33,000				
			2	Rebar #5-6"OC EW	1	ton	3,500.00	3,500				
			3	Concrete Material	25	cy	190.00	4,750				
			4	Concrete Labor	25	cy	135.00	3,375				
				Perimeter Stem Wall								
			5	Formwork	2,200	sf	25.00	55,000				
			6	Rebar #5-12"OC EW	5	ton	3,500.00	17,500				
			7	Concrete Material	130	cy	190.00	24,700				
			8	Concrete Labor	130	cy	135.00	17,550				
			9	Geotextile, under pea gravel	670	sy	4.50	3,015				
			10	Pea Gravel	140	cy	60.00	8,400				
			11	Non-woven filter fabric	220	sy	9.00	1,980				
			12	Wood Chip, media	110	cy	45.00	4,950				

CONSTRUCTION COST ESTIMATE

PROJECT: Central Valley Project	PREPARED BY: Regional Office, Sacramento, CA
DIVISION: West San Joaquin Division	ESTIMATE DATE: July 2007 (Revised after DEC)
UNIT: San Luis Unit -- Drainage System -- Westlands Water District-South	ESTIMATE TYPE: Feasibility
FEATURE: Drainage Feature Re-Evaluation Feasibility Study	PRICE LEVEL: April 2006

PROPERTY CLASS	IDENTIFIED PROPERTY	PLANT ACCOUNT	ITEM	DESCRIPTION	QUANTITY	UNIT	PRICE	AMOUNT	FIELD COST	TOTAL FIELD COST	NONCONTRACT COST	CONSTRUCTION COST
12	03			WWD SOUTH Se BIOTREATMENT PLANT (continued)								
		130		Structures and Improvements (continued)								
				(10) Biofilter - Odor Control Unit (continued)								
			13	Compost, media	110	cy	55.00	6,050				
			14	4" PVC, Sch 80, glued	150	lf	40.00	6,000				
			15	4" fittings, allocation	1	ls	1,500.00	1,500				
			16	2" PVC, Sch 80, glued	300	lf	30.00	9,000				
			17	2" fittings, allocation	1	ls	1,125.00	1,125				
			18	1" Poly irrigation hose	100	lf	8.00	800				
			19	Sprinklers	8	ea	75.00	600				
			20	Non-freeze hose bibbs	2	ea	225.00	450				
			21	20" Fiberglass Duct Supply, yard	150	lf	240.00	36,000				
			22	Misc fittings and dampers, etc	1	ls	7,500.00	7,500				
			23	Mobilization (+/- 5%)				12,337				
			24	Unlisted Items (+/- 15%)				38,862				
			25	Allowance for Procurement Strategy (+/- 5%)				12,055				
				Subtotal				310,000				
				Contingencies (+/- 25%)				80,000				
				Field Cost - (10) Biofilter - Odor Control Unit				390,000				
				(11) Septic System					280,000			
			1	Pump Wetwell, 5' Dia	1	ea	2,700.00	2,700				
			2	Duplex chopper pump station	1	ea	11,250.00	11,250				
			3	Septic Tank, 2500 gal	1	ea	4,000.00	4,000				
			4	Distribution Box	1	ea	2,250.00	2,250				
			5	Drain Rock	1,470	cy	60.00	88,200				
			6	Supply Pipe, 4" Sch 80 PVC	250	ea	40.00	10,000				
			7	Drain Pipe, 4" perf.	660	lf	7.00	4,620				
			8	Filter Fabric	735	sy	9.00	6,615				
			9	Drain Rock	735	cy	60.00	44,100				

CONSTRUCTION COST ESTIMATE

PROJECT: Central Valley Project	PREPARED BY: Regional Office, Sacramento, CA
DIVISION: West San Joaquin Division	ESTIMATE DATE: July 2007 (Revised after DEC)
UNIT: San Luis Unit -- Drainage System -- Westlands Water District-South	ESTIMATE TYPE: Feasibility
FEATURE: Drainage Feature Re-Evaluation Feasibility Study	PRICE LEVEL: April 2006

PROPERTY CLASS	IDENTIFIED PROPERTY	PLANT ACCOUNT	ITEM	DESCRIPTION	QUANTITY	UNIT	PRICE	AMOUNT	FIELD COST	TOTAL FIELD COST	NONCONTRACT COST	CONSTRUCTION COST
12	03			WWD SOUTH Se BIOTREATMENT PLANT (continued)								
		130		Structures and Improvements (continued)								
				(11) Septic System (continued)								
			10	Mobilization (+/- 5%)				8,687				
			11	Unlisted Items (+/- 15%)				27,363				
			12	Allowance for Procurement Strategy (+/- 5%)				10,215				
				Subtotal				220,000				
				Contingencies (+/- 25%)				60,000				
				Field Cost - (11) Septic System				280,000				
				Field Cost - Structures and Improvements				17,840,000				
		152		Waterways					10,920,000			
				(1) BioReactor Internals					9,300,000			
				6" Concrete Filled PVC Piers								
			1	Sch 80 PVC Pipe	560	lf	50.00	28,000				
			2	Concrete and Placement	5	cy	1,000.00	5,000				
			3	GRC Panel	4,100	sf	20.00	82,000				
			4	Bottom Nozzles	9,100	lf	6.00	54,600				
			5	Concrete Topping Slab	75	sf	525.00	39,375				
			6	4" Filtrate Lateral, HDPE w/ orifice holes at 3'8"OC, incl supports	1,215	lf	40.00	48,600				
			7	4" Pipe link seal, 6" hole + sleeve	32	ea	520.00	16,640				
			8	18" Backwash Pipe, HDPE	160	lf	165.00	26,400				
			9	18" Pipe link seal, 24" hole + sleeve	32	ea	1,700.00	54,400				
			10	14" Backwash Discharge, perforated, HDPE	575	lf	170.00	97,750				
			11	14" Pipe link seal, 18" hole + sleeve	32	ea	1,100.00	35,200				
			12	6" Feed Pipe, HDPE	240	lf	50.00	12,000				
			13	6" Fittings, Straight Ts, Red. Ts, elbows (typ), HDPE	48	ea	285.00	13,680				
			14	6" Pipe link seal, 10" hole, HDPE	8	ea	405.00	3,240				
			15	4" Feed Pipe, perforated, HDPE	1,185	lf	45.00	53,325				
			16	4" Fittings, Straight Ts, Red. Ts, elbows (typ), HDPE	32	ea	150.00	4,800				

CONSTRUCTION COST ESTIMATE

PROJECT: Central Valley Project	PREPARED BY: Regional Office, Sacramento, CA
DIVISION: West San Joaquin Division	ESTIMATE DATE: July 2007 (Revised after DEC)
UNIT: San Luis Unit -- Drainage System -- Westlands Water District-South	ESTIMATE TYPE: Feasibility
FEATURE: Drainage Feature Re-Evaluation Feasibility Study	PRICE LEVEL: April 2006

PROPERTY CLASS	IDENTIFIED PROPERTY	PLANT ACCOUNT	ITEM	DESCRIPTION	QUANTITY	UNIT	PRICE	AMOUNT	FIELD COST	TOTAL FIELD COST	NONCONTRACT COST	CONSTRUCTION COST
12	03			WWD SOUTH Se BIOTREATMENT PLANT (continued)								
		152		Waterways (continued)								
				(1) BioReactor Internals (continued)								
			17	Media	3,300,000	lbs	0.60	1,980,000				
			18	Media Installation	3,300,000	lbs	0.10	330,000				
			19	FRP Cover	8	ea	15,000.00	120,000				
			20	AB Met Inoculums, installed	825,000	gal	3.50	2,887,500				
			21	Mobilization (+/- 5%)				294,626				
			22	Unlisted Items (+/- 15%)				928,070				
			23	Allowance for Procurement Strategy (+/- 5%)				384,794				
				Subtotal				7,500,000				
				Contingencies (+/- 25%)				1,800,000				
				Field Cost - (1) BioReactor Internals				9,300,000				
				(2) Filter Mechanical - In Pipe Gallery					1,000,000			
				Feed, Recirculate, and Filtrate								
			1	4" Piping, PVC Piping	240	lf	40.00	9,600				
			2	4" Fittings, Ts, Elbows, Van Stone Flanges, etc	96	ea	150.00	14,400				
			3	4" Valves, butterfly geared manual actuator	48	ea	675.00	32,400				
			4	6" Piping, PVC Piping	240	lf	65.00	15,600				
			5	6" Fittings, Ts, Elbows, Van Stone Flanges, etc	96	ea	285.00	27,360				
			6	6" Valves, butterfly geared manual actuator, typ for check valves	12	ea	1,000.00	12,000				
			7	6" PVC Swing Check Valves	12	ea	2,250.00	27,000				
			8	6" Valves, butterfly pneunm. act. - bw, feed, filtrate return, filtrate	20	ea	2,100.00	42,000				
			9	6" Magnetic Flowmeters	4	ea	7,500.00	30,000				
			10	pH/ORP Sensor Assemblies (sensor, piping, valving, tap)	16	ea	1,800.00	28,800				
			11	Pressure Gauge on Diaphragm, assembly	8	ea	770.00	6,160				
			12	Pressure Transmitters on Diaphragm, assembly	24	ea	3,000.00	72,000				
			13	Static Mixers, 6" dia, sch 80 PVC, w/ injection port	8	ea	2,500.00	20,000				
			14	1/2" dia magnetic flow meter	8	ea	2,600.00	20,800				
			15	Misc 1/2" hardware: solenoid, globe, ball check	8	ea	1,125.00	9,000				
			16	2" Air Release Valves	8	ea	1,400.00	11,200				

CONSTRUCTION COST ESTIMATE

PROJECT: Central Valley Project	PREPARED BY: Regional Office, Sacramento, CA
DIVISION: West San Joaquin Division	ESTIMATE DATE: July 2007 (Revised after DEC)
UNIT: San Luis Unit -- Drainage System -- Westlands Water District-South	ESTIMATE TYPE: Feasibility
FEATURE: Drainage Feature Re-Evaluation Feasibility Study	PRICE LEVEL: April 2006

PROPERTY CLASS	IDENTIFIED PROPERTY	PLANT ACCOUNT	ITEM	DESCRIPTION	QUANTITY	UNIT	PRICE	AMOUNT	FIELD COST	TOTAL FIELD COST	NONCONTRACT COST	CONSTRUCTION COST
12	03			WWD SOUTH Se BIOTREATMENT PLANT (continued)								
		152		Waterways (continued)								
				(2) Filter Mechanical - In Pipe Gallery (continued)								
				Backwash Supply and Waste Piping								
			17	18" Dia Pneumatic BF Valve, lug	8	ea	11,500.00	92,000				
			18	18" Dia Pipe HDPE	120	lf	100.00	12,000				
			19	18" Dia Fittings	24	ea	1,700.00	40,800				
			20	14" Backwash Waste	240	lf	75.00	18,000				
			21	14" Valves	16	ea	2,400.00	38,400				
			22	14" Fittings	32	ea	1,000.00	32,000				
			23	Foul Air, 8" FRP	200	ea	100.00	20,000				
			24	Mobilization (+/- 5%)				31,576				
			25	Unlisted Items (+/- 15%)				99,464				
			26	Allowance for Procurement Strategy (+/- 5%)				37,440				
				Subtotal				800,000				
				Contingencies (+/- 25%)				200,000				
				Field Cost - (2) Filter Mechanical - In Pipe Gallery				1,000,000				
				(3) Mechanical Room and Piping Gallery					380,000			
			1	Blower Piping, 10" 304 SS Sch 10 (incl yard piping)	140	lf	330.00	46,200				
			2	10" 304 SS Fittings	10	ea	1,800.00	18,000				
			3	10" BF Valve, Ductile Iron w/ Stainless Internals	2	ea	1,500.00	3,000				
			4	Feed Piping, 8" HDPE	140	lf	60.00	8,400				
			5	8" Fittings	10	ea	285.00	2,850				
			6	Filtrate Piping, 8" HDPE	140	lf	60.00	8,400				
			7	8" Fittings	10	ea	2,100.00	21,000				
			8	Backwash Supply, dual 18" on each side on each side of pipe gallery	220	lf	100.00	22,000				
			9	Backwash Piping, 18"	60	lf	100.00	6,000				
			10	18" Fittings	6	ea	1,800.00	10,800				
			11	Backwash Waste, dual 24" on each side on each side of pipe gallery	370	lf	145.00	53,650				
			12	Nutrient Feed Loop	275	lf	40.00	11,000				
			13	24" Fiberglass Duct Supply	185	lf	170.00	31,450				

CONSTRUCTION COST ESTIMATE

PROJECT: Central Valley Project	PREPARED BY: Regional Office, Sacramento, CA
DIVISION: West San Joaquin Division	ESTIMATE DATE: July 2007 (Revised after DEC)
UNIT: San Luis Unit -- Drainage System -- Westlands Water District-South	ESTIMATE TYPE: Feasibility
FEATURE: Drainage Feature Re-Evaluation Feasibility Study	PRICE LEVEL: April 2006

PROPERTY CLASS	IDENTIFIED PROPERTY	PLANT ACCOUNT	ITEM	DESCRIPTION	QUANTITY	UNIT	PRICE	AMOUNT	FIELD COST	TOTAL FIELD COST	NONCONTRACT COST	CONSTRUCTION COST
12	03			WWD SOUTH Se BIOTREATMENT PLANT (continued)								
		152		Waterways (continued)								
				(3) Mechanical Room and Piping Gallery (continued)								
			14	Mobilization (+/- 5%)				12,138				
			15	Unlisted Items (+/- 15%)				38,233				
			16	Allowance for Procurement Strategy (+/- 5%)				16,879				
				Subtotal				310,000				
				Contingencies (+/- 25%)				70,000				
				Field Cost - (3) Mechanical Room and Piping Gallery				380,000				
				(4) Other Mechanical Room								
				Backwash Supply					240,000			
			1	18" Magnetic Flow Meter	1	ea	30,000.00	30,000				
			2	Pressure Gauge Assemblies	4	ea	770.00	3,080				
			3	Pressure Transmitter Assemblies	1	ea	3,000.00	3,000				
			4	Backwash Strainer DPIT Assembly	1	ea	3,000.00	3,000				
			5	24" Backwash Tank Isolation Valve, geared/manual	1	ea	3,000.00	3,000				
			6	18" butterfly valves, geared / manual	2	ea	11,500.00	23,000				
			7	18" check valve	1	ea	20,000.00	20,000				
			8	Backwash Strainer (18"), allocation	1	ea	25,000.00	25,000				
			9	Dissolved Oxygen Sensors, Oxidation Tanks	1	ea	8,500.00	8,500				
				Backwash Clarifier								
			10	Pressure Gauge Assemblies	2	ea	770.00	1,540				
			11	Pressure Transmitter Assemblies	2	ea	3,000.00	6,000				
			12	High level float switch	2	ea	400.00	800				
			13	4" PVC Swing Check Valves	1	ea	2,250.00	2,250				
			14	4" Eccentric Plug Valves	9	ea	520.00	4,680				

CONSTRUCTION COST ESTIMATE

PROJECT: Central Valley Project	PREPARED BY: Regional Office, Sacramento, CA
DIVISION: West San Joaquin Division	ESTIMATE DATE: July 2007 (Revised after DEC)
UNIT: San Luis Unit -- Drainage System -- Westlands Water District-South	ESTIMATE TYPE: Feasibility
FEATURE: Drainage Feature Re-Evaluation Feasibility Study	PRICE LEVEL: April 2006

PROPERTY CLASS	IDENTIFIED PROPERTY	PLANT ACCOUNT	ITEM	DESCRIPTION	QUANTITY	UNIT	PRICE	AMOUNT	FIELD COST	TOTAL FIELD COST	NONCONTRACT COST	CONSTRUCTION COST
12	03			WWD SOUTH Se BIOTREATMENT PLANT (continued)								
		152		Waterways (continued)								
				(4) Other Mechanical Room (continued)								
				Nutrient Feed System								
			15	High level float switch	1	ea	400.00	400				
			16	Ultrasonic Level Sensor/Transmitter	1	ea	1,200.00	1,200				
			17	Globe Valves, 3"	7	ea	450.00	3,150				
			18	Pressure Gauge Assemblies	1	ea	770.00	770				
			19	High Pressure Relief Valves	2	ea	1,125.00	2,250				
				Drain Sump								
			20	High level float switch	1	ea	400.00	400				
			21	Ultrasonic Level Sensor/Transmitter	1	ea	1,200.00	1,200				
			22	4" PVC Swing Check Valves	2	ea	2,250.00	4,500				
			23	4" Butterfly valves	2	ea	400.00	800				
			24	Mobilization (+/- 5%)				7,426				
			25	Unlisted Items (+/- 15%)				23,392				
			26	Allowance for Procurement Strategy (+/- 5%)				10,662				
				Subtotal				190,000				
				Contingencies (+/- 25%)				50,000				
				Field Cost - (4) Other Mechanical Room				240,000				
				Field Cost - Waterways				10,920,000				
		160		Pumps and Prime Movers					1,150,000			
				Mechanical Building - Equipment								
			1	Backwash Pump, 8960 gpm	2	ea	90,000.00	180,000				
			2	125 HP VFD, custom engineered	2	ea	30,000.00	60,000				
			3	Installation, +/- 30% of above	1	ls	72,000.00	72,000				
			4	Feed Pumps, 844 gpm	2	ea	25,000.00	50,000				
			5	Installation, +/- 30% of above	1	ls	15,000.00	15,000				

CONSTRUCTION COST ESTIMATE

PROJECT: Central Valley Project	PREPARED BY: Regional Office, Sacramento, CA
DIVISION: West San Joaquin Division	ESTIMATE DATE: July 2007 (Revised after DEC)
UNIT: San Luis Unit -- Drainage System -- Westlands Water District-South	ESTIMATE TYPE: Feasibility
FEATURE: Drainage Feature Re-Evaluation Feasibility Study	PRICE LEVEL: April 2006

PROPERTY CLASS	IDENTIFIED PROPERTY	PLANT ACCOUNT	ITEM	DESCRIPTION	QUANTITY	UNIT	PRICE	AMOUNT	FIELD COST	TOTAL FIELD COST	NONCONTRACT COST	CONSTRUCTION COST
12	03			WWD SOUTH Se BIOTREATMENT PLANT (continued)								
		160		Pumps and Prime Movers (continued)								
			6	Nutrient Pumps, 5 gpm	1	ea	7,500.00	7,500				
			7	Installation, +/- 30% of above	1	ls	2,250.00	2,250				
			8	Recycle Pumps, 350 gpm	16	ea	12,500.00	200,000				
			9	Installation, +/- 30% of above	1	ls	60,000.00	60,000				
			10	Clarifier Sludge/Decant Pump, 300 gpm	1	ea	20,000.00	20,000				
			11	5 HP VFD, custom engineered	1	ea	7,000.00	7,000				
			12	Installation, +/- 30% of above	1	ls	8,100.00	8,100				
			13	Drain Pumps, duplex submersible package w/ control panel	2	ea	20,000.00	40,000				
			14	Installation, +/- 30% of above	1	ls	12,000.00	12,000				
			15	Mobilization (+/- 5%)				36,693				
			16	Unlisted Items (+/- 15%)				115,581				
			17	Allowance for Procurement Strategy (+/- 5%)				43,876				
				Subtotal				930,000				
				Contingencies (+/- 25%)				220,000				
				Field Cost - Pumps and Prime Movers				1,150,000				
		170		Accessory Electrical Equipment					430,000			
				Electrical, associated with process mechanical								
			1	MCCs, VFDs, and Distribution Panels, per supplier quote	1	ls	150,000.00	150,000				
			2	Inst of elec eq incl terminations, tax, sbcntrctr OH&P, +/- 50% of above	1	ls	75,000.00	75,000				
			3	Mechanical Bldg conduit to process motors	540	lf	25.00	13,500				
			4	Pipe Gallery, conduit to process motors	240	lf	25.00	6,000				
			5	Solids Process Building, conduit to motors	150	lf	25.00	3,750				
			6	Yard conduit	1,000	lf	25.00	25,000				

CONSTRUCTION COST ESTIMATE

PROJECT: Central Valley Project	PREPARED BY: Regional Office, Sacramento, CA
DIVISION: West San Joaquin Division	ESTIMATE DATE: July 2007 (Revised after DEC)
UNIT: San Luis Unit -- Drainage System -- Westlands Water District-South	ESTIMATE TYPE: Feasibility
FEATURE: Drainage Feature Re-Evaluation Feasibility Study	PRICE LEVEL: April 2006

PROPERTY CLASS	IDENTIFIED PROPERTY	PLANT ACCOUNT	ITEM	DESCRIPTION	QUANTITY	UNIT	PRICE	AMOUNT	FIELD COST	TOTAL FIELD COST	NONCONTRACT COST	CONSTRUCTION COST
12	03			WWD SOUTH Se BIOTREATMENT PLANT (continued)								
		170		Accessory Electrical Equipment (continued)								
			7	Mobilization (+/- 5%)				13,663				
			8	Unlisted Items (+/- 15%)				43,037				
			9	Allowance for Procurement Strategy (+/- 5%)				20,051				
				Subtotal				350,000				
				Contingencies (+/- 25%)				80,000				
				Field Cost - Accessory Electrical Equipment				430,000				
		180		Installed Supervisory Control Equipment					830,000			
			1	System Design	1	ls	22,500.00	22,500				
				Conduit and Wire, per pair of two trainsl (all 1") - installed								
			2	Flex cndt, from ea device to J box, I&C power (1 point ea)	1,600	lf	25.00	40,000				
			3	Flex cndt, from ea device to J box, signal (1 point ea)	1,600	lf	25.00	40,000				
			4	Rgd cndt, from ea device to J box, I&C power (4 pts/cmn. conduit)	1,600	lf	25.00	40,000				
			5	Rgd cndt, from ea device to J box, signal (4 pts/common conduit)	1,600	lf	25.00	40,000				
				Conduit and Wire, trunk lines - gallery to control room (all 2")								
			6	Rigid conduit, I&C power	150	lf	25.00	3,750				
			7	Rigid conduit, signal	150	lf	25.00	3,750				
				Conduit and Wire, Mechanical Room (all 1" assumed) all installed								
			8	Flex cndt, from ea device to jnctn box, I&C power (1 pnt ea)	500	lf	25.00	12,500				
			9	Flex cndt, from ea device to jnctn box, signal (1 pnt ea)	500	lf	25.00	12,500				
			10	Rigid conduit, I&C power	500	lf	25.00	12,500				
			11	Rigid conduit, signal	500	lf	25.00	12,500				
			12	Rigid conduit, I&C power trunk	60	lf	25.00	1,500				
			13	Rigid conduit, signal trunk mech bldg	60	lf	25.00	1,500				
			14	Rigid conduit, signal trunk solids dewatering	150	lf	25.00	3,750				
			15	PLC Cabinet (dual proc's, 6' panel, 10" Color HMI, batt bckp), inst	1	ea	110,000.00	110,000				
			16	Remote I/O Racks, installed	1	ea	22,500.00	22,500				
			17	Desktop PC and Switch in Admin Bldg	1	ea	12,000.00	12,000				
			18	Terminations	70	hr	120.00	8,400				

CONSTRUCTION COST ESTIMATE

PROJECT: Central Valley Project	PREPARED BY: Regional Office, Sacramento, CA
DIVISION: West San Joaquin Division	ESTIMATE DATE: July 2007 (Revised after DEC)
UNIT: San Luis Unit -- Drainage System -- Westlands Water District-South	ESTIMATE TYPE: Feasibility
FEATURE: Drainage Feature Re-Evaluation Feasibility Study	PRICE LEVEL: April 2006

PROPERTY CLASS	IDENTIFIED PROPERTY	PLANT ACCOUNT	ITEM	DESCRIPTION	QUANTITY	UNIT	PRICE	AMOUNT	FIELD COST	TOTAL FIELD COST	NONCONTRACT COST	CONSTRUCTION COST
12	03			WWD SOUTH Se BIOTREATMENT PLANT (continued)								
		180		Installed Supervisory Control Equipment (continued)								
				Testing (team of two tech's)								
			19	Continuity Testing	110	hr	120.00	13,200				
			20	Loop Testing	80	hr	120.00	9,600				
			21	Signal Conditioning and tagging	80	hr	120.00	9,600				
			22	Programming (Allocation)	1	ls	90,000.00	90,000				
			23	Mobilization (+/- 5%)				26,103				
			24	Unlisted Items (+/- 15%)				82,223				
			25	Allowance for Procurement Strategy (+/- 5%)				29,625				
				Subtotal				660,000				
				Contingencies (+/- 25%)				170,000				
				Field Cost - Installed Supervisory Control Equipment				830,000				
				FACILITATING SERVICES (2%)								
				INVESTIGATIONS (3%)								
				DESIGNS & SPECIFICATIONS (10%)								
				CONSTRUCTION SUPERVISION (12%)								
				OTHER COSTS (+/- 27%)							8,820,000	

CONSTRUCTION COST ESTIMATE

PROJECT: Central Valley Project	PREPARED BY: Regional Office, Sacramento, CA
DIVISION: West San Joaquin Division	ESTIMATE DATE: July 2007 (Revised after DEC)
UNIT: San Luis Unit -- Drainage System -- Westlands Water District-South	ESTIMATE TYPE: Feasibility
FEATURE: Drainage Feature Re-Evaluation Feasibility Study	PRICE LEVEL: April 2006

PROPERTY CLASS	IDENTIFIED PROPERTY	PLANT ACCOUNT	ITEM	DESCRIPTION	QUANTITY	UNIT	PRICE	AMOUNT	FIELD COST	TOTAL FIELD COST	NONCONTRACT COST	CONSTRUCTION COST
12	04			WWD SOUTH - EVAPORATION PONDS - Ponds will occupy a total						111,192,000	32,808,000	144,000,000
				area of 352 acres. There will be one terminal cell initially, with new								
				terminal cells to follow in 12.5, 25, and 37.5 years respectfully.								
				(1) INITIAL POND CONSTRUCTION						80,892,000	24,108,000	105,000,000
		100		Land and Rights					1,650,000			
			1	Seasonal Crop Land - Fee	330	Ac	4,000.00	1,320,000				
			2	Undeveloped Land - Fee	22	Ac	2,100.00	46,200				
			3	Unlisted Items (+/- 5%)				83,800				
				Subtotal				1,450,000				
				Contingencies (+/- 15%)				200,000				
				Field Cost - Land and Rights				1,650,000				
		130		Structures and Improvements					4,700,000			
				General Site Preparation								
			1	Removal of gravel/dirt roadway 24'x3'x10,000'; spread waste on site	26,700	cy	3.00	80,100				
			2	Fill in ditch/canal (assume 20'x8'x4,000'), use existing bank material	23,700	cy	3.00	71,100				
			3	Chain link - 6ft w/3 strands barbed wire	18,000	lf	30.00	540,000				
			4	Gates - 20 ft wide	4	ea	1,550.00	6,200				
				Steel Maintenance Building								
			5	Concrete foundation slab - 20'x40'x2	60	cy	1,000.00	60,000				
			6	Type V cement	20	ton	170.00	3,400				
			7	Reinforcement	9,000	lb	1.75	15,750				
			8	Pre-fab 800sf steel building	1	ea	27,000.00	27,000				
				Monitoring Well:								
			9	Furnish and Install Monitoring Wells - D=2"; Depth=60', encased	10	ea	7,000.00	70,000				
				Perimeter Drains:								
			10	Excavation for interceptor trench - 2'x7'x31,500'	16,400	cy	4.50	73,800				
			11	F&I Sand filter material (21 mile haul)	11,700	cy	60.00	702,000				
			12	F&I Gravel drain material (21 mile haul) - 4 sf /ft for 8" drain pipe	4,700	cy	70.00	329,000				
			13	F&I 8" dia PVC slotted drain pipe	31,500	lf	20.00	630,000				
			14	Excavation for waste trench	16,400	cy	3.00	49,200				

CONSTRUCTION COST ESTIMATE

PROJECT: Central Valley Project	PREPARED BY: Regional Office, Sacramento, CA
DIVISION: West San Joaquin Division	ESTIMATE DATE: July 2007 (Revised after DEC)
UNIT: San Luis Unit -- Drainage System -- Westlands Water District-South	ESTIMATE TYPE: Feasibility
FEATURE: Drainage Feature Re-Evaluation Feasibility Study	PRICE LEVEL: April 2006

PROPERTY CLASS	IDENTIFIED PROPERTY	PLANT ACCOUNT	ITEM	DESCRIPTION	QUANTITY	UNIT	PRICE	AMOUNT	FIELD COST	TOTAL FIELD COST	NONCONTRACT COST	CONSTRUCTION COST
12	04			WWD SOUTH - EVAPORATION PONDS (continued)								
				(1) INITIAL POND CONSTRUCTION (continued)								
		130		Structures and Improvements (continued)								
			15	Inspection/Cleanout/Sump Manhole - D=5'xH=8' - FRP preformed	34	ea	10,000.00	340,000				
			16	Inspection/Cleanout/Sump Manhole - D=5'xH=12' - FRP preformed	30	ea	12,000.00	360,000				
			17	Return Flow Pump - D=4"; TDH=20'; w/ auto on/off	60	ea	500.00	30,000				
			18	Mobilization (+/- 5%)				169,378				
			19	Unlisted Items (+/- 10%)				343,073				
				Subtotal				3,900,000				
				Contingencies (+/- 20%)				800,000				
				Field Cost - Structures and Improvements				4,700,000				
		150		Reservoirs					25,000,000			
				Liners for Concentration Cells								
				Furnish and Install Geomembrane Liner - 560,000 SY								
			1	F&I 40 mil thick LDPE liner - 1,700,000 SY	1,700,000	sy	6.50	11,050,000				
			2	Excavation - Top 20" and stockpile	561,700	cy	3.00	1,685,100				
			3	Prep surface for LDPE liner	1,700,000	sy	0.15	255,000				
			4	Place from stockpile and compact (10% Loss)	505,500	cy	10.00	5,055,000				
			5	Mobilization (+/- 5%)				902,255				
			6	Unlisted Items (+/- 10%)				2,052,645				
				Subtotal				21,000,000				
				Contingencies (+/- 20%)				4,000,000				
				Field Cost - Reservoirs				25,000,000				

CONSTRUCTION COST ESTIMATE

PROJECT: Central Valley Project	PREPARED BY: Regional Office, Sacramento, CA
DIVISION: West San Joaquin Division	ESTIMATE DATE: July 2007 (Revised after DEC)
UNIT: San Luis Unit -- Drainage System -- Westlands Water District-South	ESTIMATE TYPE: Feasibility
FEATURE: Drainage Feature Re-Evaluation Feasibility Study	PRICE LEVEL: April 2006

PROPERTY CLASS	IDENTIFIED PROPERTY	PLANT ACCOUNT	ITEM	DESCRIPTION	QUANTITY	UNIT	PRICE	AMOUNT	FIELD COST	TOTAL FIELD COST	NONCONTRACT COST	CONSTRUCTION COST
12	04			WWD SOUTH - EVAPORATION PONDS (continued)								
				(1) INITIAL POND CONSTRUCTION (continued)								
		152		Waterways					46,000,000			
				Sheetpile Embankment Dikes (includes 1 terminal cell):								
			1	Perimeter walls, 16,750'x20' long, furnish and drive 10 ft	335,000	sf	16.00	5,360,000				
			2	Interior walls, 14,800'x20' long, furnish and drive 10 ft	296,000	sf	16.00	4,736,000				
			3	Compacted embankment, furnish and place	1,072,000	cy	15.00	16,080,000				
			4	Scarify footprint (12" disc)	140,000	sy	1.00	140,000				
			5	Excavate compacted embankment	521,400	cy	10.00	5,214,000				
			6	Waste on site	521,400	cy	3.00	1,564,200				
			7	Mobilization (+/- 5%)				1,654,710				
			8	Unlisted Items (+/- 10%)				3,251,090				
				Subtotal				38,000,000				
				Contingencies (+/- 20%)				8,000,000				
				Field Cost - Waterways				46,000,000				
		153		Waterway Structures					3,500,000			
				Gate Structure (22 ea)								
			1	Reinforced Concrete 81 CY each gate	1,785	cy	1,000.00	1,785,000				
			2	Cast in place - type V cement	590	ton	170.00	100,300				
			3	Epoxy coated reinforcement assumed	268,000	lb	2.00	536,000				
			4	Stoplogs - 1 set = 4 stoplogs, Avg 2.5ft x 12ft x 4in	88	set	1,000.00	88,000				
				Furnish and Lay the following smooth double wall HDPE Pipe:								
			5	24 in dia. - 20 ft long	22	ea	1,500.00	33,000				

CONSTRUCTION COST ESTIMATE

PROJECT: Central Valley Project	PREPARED BY: Regional Office, Sacramento, CA
DIVISION: West San Joaquin Division	ESTIMATE DATE: July 2007 (Revised after DEC)
UNIT: San Luis Unit -- Drainage System -- Westlands Water District-South	ESTIMATE TYPE: Feasibility
FEATURE: Drainage Feature Re-Evaluation Feasibility Study	PRICE LEVEL: April 2006

PROPERTY CLASS	IDENTIFIED PROPERTY	PLANT ACCOUNT	ITEM	DESCRIPTION	QUANTITY	UNIT	PRICE	AMOUNT	FIELD COST	TOTAL FIELD COST	NONCONTRACT COST	CONSTRUCTION COST
12	04			WWD SOUTH - EVAPORATION PONDS (continued)								
				(1) INITIAL POND CONSTRUCTION (continued)								
		153		Waterway Structures (continued)								
			6	Mobilization (+/- 5%)				127,115				
			7	Unlisted Items (+/- 10%)				230,585				
				Subtotal				2,900,000				
				Contingencies (+/- 20%)				600,000				
				Field Cost - Waterway Structures				3,500,000				
		199		Miscellaneous Installed Equipment					42,000			
			1	Mobile Emergency Pump - THD=20'; pump & hose mobile-on skids	2	ea	15,000.00	30,000				
			2	Mobilization (+/- 5%)				1,500				
			3	Unlisted Items (+/- 10%)				3,500				
				Subtotal				35,000				
				Contingencies (+/- 20%)				7,000				
				Field Cost - Miscellaneous Installed Equipment				42,000				
				FACILITATING SERVICES (2%)								
				INVESTIGATIONS (3%)								
				DESIGNS & SPECIFICATIONS (10%)								
				CONSTRUCTION SUPERVISION (12%)								
				OTHER COSTS (+/- 27%)							24,108,000	

CONSTRUCTION COST ESTIMATE

PROJECT: Central Valley Project	PREPARED BY: Regional Office, Sacramento, CA
DIVISION: West San Joaquin Division	ESTIMATE DATE: July 2007 (Revised after DEC)
UNIT: San Luis Unit -- Drainage System -- Westlands Water District-South	ESTIMATE TYPE: Feasibility
FEATURE: Drainage Feature Re-Evaluation Feasibility Study	PRICE LEVEL: April 2006

PROPERTY CLASS	IDENTIFIED PROPERTY	PLANT ACCOUNT	ITEM	DESCRIPTION	QUANTITY	UNIT	PRICE	AMOUNT	FIELD COST	TOTAL FIELD COST	NONCONTRACT COST	CONSTRUCTION COST
12	04			WWD SOUTH - EVAPORATION PONDS (continued)								
				(2) FUTURE ADDITIONAL TERMINAL CELL - 12.5 YEARS LATER						10,100,000	2,900,000	13,000,000
		100		Land and Rights								
				Costs of Land and Rights have been included with Initial Construction.								
		130		Structures and Improvements					300,000			
				Perimeter Drains:								
			1	Excavation for interceptor trench - 2'x7'x3200'	1,660	cy	4.50	7,470				
			2	F&I Sand filter material (21 mile haul)	1,200	cy	60.00	72,000				
			3	F&I Gravel drain material (21 mile haul) - 4 sf /ft for 8" drain pipe	470	cy	70.00	32,900				
			4	F&I 8" dia PVC slotted drain pipe	3,200	lf	20.00	64,000				
			5	Excavation for waste trench	1,660	cy	3.00	4,980				
			6	Inspection/Cleanout Manhole - D=5'xH=8' - FRP preformed	3	ea	10,000.00	30,000				
			7	Return Flow Pump - D=4"; TDH=20'; w/ auto on/off	3	ea	500.00	1,500				
			8	Mobilization (+/- 5%)				10,643				
			9	Unlisted Items (+/- 10%)				26,508				
				Subtotal				250,000				
				Contingencies (+/- 20%)				50,000				
				Field Cost - Structures and Improvements				300,000				
		150		Reservoirs					4,800,000			
				Liners for Concentration Cells								
				Furnish and Install Geomembrane Liner - 259,000 SY								
			1	F&I 40 mil thick LDPE liner - 259,000 SY	259,000	sy	6.50	1,683,500				
			2	Excavation - Top 20" and stockpile	144,000	cy	3.00	432,000				
			3	Prep surface for LDPE liner	259,000	sy	0.15	38,850				
			4	Place from stockpile and compact (10% Loss)	129,600	cy	10.00	1,296,000				
			5	Mobilization (+/- 5%)				172,518				

CONSTRUCTION COST ESTIMATE

PROJECT: Central Valley Project	PREPARED BY: Regional Office, Sacramento, CA
DIVISION: West San Joaquin Division	ESTIMATE DATE: July 2007 (Revised after DEC)
UNIT: San Luis Unit -- Drainage System -- Westlands Water District-South	ESTIMATE TYPE: Feasibility
FEATURE: Drainage Feature Re-Evaluation Feasibility Study	PRICE LEVEL: April 2006

PROPERTY CLASS	IDENTIFIED PROPERTY	PLANT ACCOUNT	ITEM	DESCRIPTION	QUANTITY	UNIT	PRICE	AMOUNT	FIELD COST	TOTAL FIELD COST	NONCONTRACT COST	CONSTRUCTION COST
12	04			WWD SOUTH - EVAPORATION PONDS (continued)								
				(2) FUTURE ADDITIONAL TERMINAL CELL - 12.5 YEARS (continued)								
		150		Reservoirs (continued)								
			6	Unlisted Items (+/- 10%)				377,133				
				Subtotal				4,000,000				
				Contingencies (+/- 20%)				800,000				
				Field Cost - Reservoirs				4,800,000				
		152		Waterways					5,000,000			
				Sheetpile Embankment Dikes for one additional terminal cell:								
			1	Perimeter walls, 3,200'x20' long, furnish and drive 10 ft	64,000	sf	16.00	1,024,000				
			2	Compacted embankment, furnish and place	120,000	cy	15.00	1,800,000				
			3	Scarify footprint (12" disc)	14,130	sy	1.00	14,130				
			4	Excavate compacted embankment	59,600	cy	10.00	596,000				
			5	Waste on site	59,600	cy	3.00	178,800				
			6	Mobilization (+/- 5%)				180,647				
			7	Unlisted Items (+/- 10%)				406,424				
				Subtotal				4,200,000				
				Contingencies (+/- 20%)				800,000				
				Field Cost - Waterways				5,000,000				
				FACILITATING SERVICES (2%)								
				INVESTIGATIONS (3%)								
				DESIGNS & SPECIFICATIONS (10%)								
				CONSTRUCTION SUPERVISION (12%)								
				OTHER COSTS (+/- 27%)							2,900,000	

CONSTRUCTION COST ESTIMATE

PROJECT: Central Valley Project	PREPARED BY: Regional Office, Sacramento, CA
DIVISION: West San Joaquin Division	ESTIMATE DATE: July 2007 (Revised after DEC)
UNIT: San Luis Unit -- Drainage System -- Westlands Water District-South	ESTIMATE TYPE: Feasibility
FEATURE: Drainage Feature Re-Evaluation Feasibility Study	PRICE LEVEL: April 2006

PROPERTY CLASS	IDENTIFIED PROPERTY	PLANT ACCOUNT	ITEM	DESCRIPTION	QUANTITY	UNIT	PRICE	AMOUNT	FIELD COST	TOTAL FIELD COST	NONCONTRACT COST	CONSTRUCTION COST
12	04			WWD SOUTH - EVAPORATION PONDS (continued)								
				(3) FUTURE ADDITIONAL TERMINAL CELL - 25 YEARS LATER						10,100,000	2,900,000	13,000,000
		100		Land and Rights								
				Costs of Land and Rights have been included with Initial Construction.								
		130		Structures and Improvements					300,000			
				Perimeter Drains:								
			1	Excavation for interceptor trench - 2'x7'x3200'	1,660	cy	4.50	7,470				
			2	F&I Sand filter material (21 mile haul)	1,200	cy	60.00	72,000				
			3	F&I Gravel drain material (21 mile haul) - 4 sf /ft for 8" drain pipe	470	cy	70.00	32,900				
			4	F&I 8" dia PVC slotted drain pipe	3,200	lf	20.00	64,000				
			5	Excavation for waste trench	1,660	cy	3.00	4,980				
			6	Inspection/Cleanout Manhole - D=5'xH=8' - FRP preformed	3	ea	10,000.00	30,000				
			7	Return Flow Pump - D=4"; TDH=20'; w/ auto on/off	3	ea	500.00	1,500				
			8	Mobilization (+/- 5%)				10,643				
			9	Unlisted Items (+/- 10%)				26,508				
				Subtotal				250,000				
				Contingencies (+/- 20%)				50,000				
				Field Cost - Structures and Improvements				300,000				
		150		Reservoirs					4,800,000			
				Liners for Concentration Cells								
				Furnish and Install Geomembrane Liner - 259,000 SY								
			1	F&I 40 mil thick LDPE liner - 259,000 SY	259,000	sy	6.50	1,683,500				
			2	Excavation - Top 20" and stockpile	144,000	cy	3.00	432,000				
			3	Prep surface for LDPE liner	259,000	sy	0.15	38,850				
			4	Place from stockpile and compact (10% Loss)	129,600	cy	10.00	1,296,000				
			5	Mobilization (+/- 5%)				172,518				

CONSTRUCTION COST ESTIMATE

PROJECT: Central Valley Project	PREPARED BY: Regional Office, Sacramento, CA
DIVISION: West San Joaquin Division	ESTIMATE DATE: July 2007 (Revised after DEC)
UNIT: San Luis Unit -- Drainage System -- Westlands Water District-South	ESTIMATE TYPE: Feasibility
FEATURE: Drainage Feature Re-Evaluation Feasibility Study	PRICE LEVEL: April 2006

PROPERTY CLASS	IDENTIFIED PROPERTY	PLANT ACCOUNT	ITEM	DESCRIPTION	QUANTITY	UNIT	PRICE	AMOUNT	FIELD COST	TOTAL FIELD COST	NONCONTRACT COST	CONSTRUCTION COST
12	04			WWD SOUTH - EVAPORATION PONDS (continued)								
				(3) FUTURE ADDITIONAL TERMINAL CELL - 25 YEARS (continued)								
		150		Reservoirs (continued)								
			6	Unlisted Items (+/- 10%)				377,133				
				Subtotal				4,000,000				
				Contingencies (+/- 20%)				800,000				
				Field Cost - Reservoirs				4,800,000				
		152		Waterways					5,000,000			
				Sheetpile Embankment Dikes for one additional terminal cell:								
			1	Perimeter walls, 3,200'x20' long, furnish and drive 10 ft	64,000	sf	16.00	1,024,000				
			2	Compacted embankment, furnish and place	120,000	cy	15.00	1,800,000				
			3	Scarify footprint (12" disc)	14,130	sy	1.00	14,130				
			4	Excavate compacted embankment	59,600	cy	10.00	596,000				
			5	Waste on site	59,600	cy	3.00	178,800				
			6	Mobilization (+/- 5%)				180,647				
			7	Unlisted Items (+/- 10%)				406,424				
				Subtotal				4,200,000				
				Contingencies (+/- 20%)				800,000				
				Field Cost - Waterways				5,000,000				
				FACILITATING SERVICES (2%)								
				INVESTIGATIONS (3%)								
				DESIGNS & SPECIFICATIONS (10%)								
				CONSTRUCTION SUPERVISION (12%)								
				OTHER COSTS (+/- 27%)							2,900,000	

CONSTRUCTION COST ESTIMATE

PROJECT: Central Valley Project	PREPARED BY: Regional Office, Sacramento, CA
DIVISION: West San Joaquin Division	ESTIMATE DATE: July 2007 (Revised after DEC)
UNIT: San Luis Unit -- Drainage System -- Westlands Water District-South	ESTIMATE TYPE: Feasibility
FEATURE: Drainage Feature Re-Evaluation Feasibility Study	PRICE LEVEL: April 2006

PROPERTY CLASS	IDENTIFIED PROPERTY	PLANT ACCOUNT	ITEM	DESCRIPTION	QUANTITY	UNIT	PRICE	AMOUNT	FIELD COST	TOTAL FIELD COST	NONCONTRACT COST	CONSTRUCTION COST
12	04			WWD SOUTH - EVAPORATION PONDS (continued)								
				(4) FUTURE ADDITIONAL TERMINAL CELL - 37.5 YEARS LATER						10,100,000	2,900,000	13,000,000
		100		Land and Rights								
				Costs of Land and Rights have been included with Initial Construction.								
		130		Structures and Improvements					300,000			
				Perimeter Drains:								
			1	Excavation for interceptor trench - 2'x7'x3200'	1,660	cy	4.50	7,470				
			2	F&I Sand filter material (21 mile haul)	1,200	cy	60.00	72,000				
			3	F&I Gravel drain material (21 mile haul) - 4 sf /ft for 8" drain pipe	470	cy	70.00	32,900				
			4	F&I 8" dia PVC slotted drain pipe	3,200	lf	20.00	64,000				
			5	Excavation for waste trench	1,660	cy	3.00	4,980				
			6	Inspection/Cleanout Manhole - D=5'xH=8' - FRP preformed	3	ea	10,000.00	30,000				
			7	Return Flow Pump - D=4"; TDH=20'; w/ auto on/off	3	ea	500.00	1,500				
			8	Mobilization (+/- 5%)				10,643				
			9	Unlisted Items (+/- 10%)				26,508				
				Subtotal				250,000				
				Contingencies (+/- 20%)				50,000				
				Field Cost - Structures and Improvements				300,000				
		150		Reservoirs					4,800,000			
				Liners for Concentration Cells								
				Furnish and Install Geomembrane Liner - 259,000 SY								
			1	F&I 40 mil thick LDPE liner - 259,000 SY	259,000	sy	6.50	1,683,500				
			2	Excavation - Top 20" and stockpile	144,000	cy	3.00	432,000				
			3	Prep surface for LDPE liner	259,000	sy	0.15	38,850				
			4	Place from stockpile and compact (10% Loss)	129,600	cy	10.00	1,296,000				
			5	Mobilization (+/- 5%)				172,518				

CONSTRUCTION COST ESTIMATE

PROJECT: Central Valley Project	PREPARED BY: Regional Office, Sacramento, CA
DIVISION: West San Joaquin Division	ESTIMATE DATE: July 2007 (Revised after DEC)
UNIT: San Luis Unit -- Drainage System -- Westlands Water District-South	ESTIMATE TYPE: Feasibility
FEATURE: Drainage Feature Re-Evaluation Feasibility Study	PRICE LEVEL: April 2006

PROPERTY CLASS	IDENTIFIED PROPERTY	PLANT ACCOUNT	ITEM	DESCRIPTION	QUANTITY	UNIT	PRICE	AMOUNT	FIELD COST	TOTAL FIELD COST	NONCONTRACT COST	CONSTRUCTION COST
12	04			WWD SOUTH - EVAPORATION PONDS (continued)								
				(4) FUTURE ADDITIONAL TERMINAL CELL - 37.5 YEARS (continued)								
		150		Reservoirs (continued)								
			6	Unlisted Items (+/- 10%)				377,133				
				Subtotal				4,000,000				
				Contingencies (+/- 20%)				800,000				
				Field Cost - Reservoirs				4,800,000				
		152		Waterways					5,000,000			
				Sheetpile Embankment Dikes for one additional terminal cell:								
			1	Perimeter walls, 3,200'x20' long, furnish and drive 10 ft	64,000	sf	16.00	1,024,000				
			2	Compacted embankment, furnish and place	120,000	cy	15.00	1,800,000				
			3	Scarify footprint (12" disc)	14,130	sy	1.00	14,130				
			4	Excavate compacted embankment	59,600	cy	10.00	596,000				
			5	Waste on site	59,600	cy	3.00	178,800				
			6	Mobilization (+/- 5%)				180,647				
			7	Unlisted Items (+/- 10%)				406,424				
				Subtotal				4,200,000				
				Contingencies (+/- 20%)				800,000				
				Field Cost - Waterways				5,000,000				
				FACILITATING SERVICES (2%)								
				INVESTIGATIONS (3%)								
				DESIGNS & SPECIFICATIONS (10%)								
				CONSTRUCTION SUPERVISION (12%)								
				OTHER COSTS (+/- 27%)							2,900,000	

CONSTRUCTION COST ESTIMATE

PROJECT: Central Valley Project	PREPARED BY: Regional Office, Sacramento, CA
DIVISION: West San Joaquin Division	ESTIMATE DATE: July 2007 (Revised after DEC)
UNIT: San Luis Unit -- Drainage System -- Westlands Water District-South	ESTIMATE TYPE: Feasibility
FEATURE: Drainage Feature Re-Evaluation Feasibility Study	PRICE LEVEL: April 2006

PROPERTY CLASS	IDENTIFIED PROPERTY	PLANT ACCOUNT	ITEM	DESCRIPTION	QUANTITY	UNIT	PRICE	AMOUNT	FIELD COST	TOTAL FIELD COST	NONCONTRACT COST	CONSTRUCTION COST
12	05			MITIGATION - Three types of habitat take up 1.519 80-acre sites.						7,790,000	2,110,000	9,900,000
				These include alternative habitat-shallow water, compensation habitat-								
				shallow water, and compensation habitat-deep water. Materials used								
				include pumps, weirs, and HDPE pipe.								
				80-Acre Unit Mitigation Features - For the breakdown of costs for					7,200,000			
				these units, see the itemized cost list in the Appendix to this estimate.								
				(1) Alternative Habitat -- Shallow Water -- Field Cost	1.005	ea	2,900,000.00	2,914,138				
				(2) Compensation Habitat -- Shallow Water -- Field Cost	0.072	ea	2,333,000.00	168,851				
				(3) Compensation Habitat -- Deep Water -- Field Cost	0.442	ea	5,200,000.00	2,299,050				
				(4) Appurtenant Facilities -- Field Cost	1.519	ea	1,210,000.00	1,838,444				
				Rounding				(20,482)				
				Field Cost - 80-Acre Unit Mitigation Features				7,200,000				
		100		Land and Rights					590,000			
			1	Fee - Alternative Habitat-Shallow Water	80.39	Ac	4,000.00	321,560				
			2	Fee - Compensation Habitat-Shallow Water	5.79	Ac	4,000.00	23,160				
			3	Fee - Compensation Habitat-Deep Water	35.37	Ac	4,000.00	141,480				
			4	Unlisted Items (+/- 5%)				23,800				
				Subtotal				510,000				
				Contingencies (+/- 15%)				80,000				
				Field Cost - Land and Rights				590,000				
				FACILITATING SERVICES (2%)								
				INVESTIGATIONS (3%)								
				DESIGNS & SPECIFICATIONS (10%)								
				CONSTRUCTION SUPERVISION (12%)								
				OTHER COSTS (+/- 27%)							2,110,000	

CONSTRUCTION COST ESTIMATE

PROJECT: Central Valley Project	PREPARED BY: Regional Office, Sacramento, CA
DIVISION: West San Joaquin Division	ESTIMATE DATE: July 2007 (Revised after DEC)
UNIT: San Luis Unit -- Drainage System -- Westlands Water District-South	ESTIMATE TYPE: Feasibility
FEATURE: Drainage Feature Re-Evaluation Feasibility Study	PRICE LEVEL: April 2006

PROPERTY CLASS	IDENTIFIED PROPERTY	PLANT ACCOUNT	ITEM	DESCRIPTION	QUANTITY	UNIT	PRICE	AMOUNT	FIELD COST	TOTAL FIELD COST	NONCONTRACT COST	CONSTRUCTION COST
13				TRANSMISSION LINES						609,000	168,000	777,000
	01			REUSE AREA A TRANSMISSION LINE - A 12kV, wood pole						140,000	40,000	180,000
				transmission line, extending 1/2 mile from the existing power line on								
				28th Avenue to the vicinity of Pumping Plant A.								
		182		Poles & Overhead Conductors					140,000			
			1	Wood Pole Transmission Line	0.50	mi	150,000.00	75,000				
			2	Service Poles, Transformer, Disconnect, & Meter	1	ea	20,000.00	20,000				
			3	Mobilization (+/- 5%)				4,750				
			4	Unlisted Items (+/- 15%)				15,250				
				Subtotal				115,000				
				Contingencies (+/- 20%)				25,000				
				Field Cost - Poles & Overhead Conductors				140,000				
				FACILITATING SERVICES (2%)								
				INVESTIGATIONS (3%)								
				DESIGNS & SPECIFICATIONS (10%)								
				CONSTRUCTION SUPERVISION (12%)								
				OTHER COSTS (+/- 27%)							40,000	

CONSTRUCTION COST ESTIMATE

PROJECT: Central Valley Project	PREPARED BY: Regional Office, Sacramento, CA
DIVISION: West San Joaquin Division	ESTIMATE DATE: July 2007 (Revised after DEC)
UNIT: San Luis Unit -- Drainage System -- Westlands Water District-South	ESTIMATE TYPE: Feasibility
FEATURE: Drainage Feature Re-Evaluation Feasibility Study	PRICE LEVEL: April 2006

PROPERTY CLASS	IDENTIFIED PROPERTY	PLANT ACCOUNT	ITEM	DESCRIPTION	QUANTITY	UNIT	PRICE	AMOUNT	FIELD COST	TOTAL FIELD COST	NONCONTRACT COST	CONSTRUCTION COST
13	02			REUSE AREA B TRANSMISSION LINE - A 12kV power service drop						29,000	8,000	37,000
				from the existing transmission line on 25th Avenue to the vicinity of								
				Pumping Plant B.								
		182		Poles & Overhead Conductors					29,000			
			1	Service Poles, Transformer, Disconnect, & Meter	1	ea	20,000.00	20,000				
			2	Mobilization (+/- 5%)				1,000				
			3	Unlisted Items (+/- 15%)				3,000				
				Subtotal				24,000				
				Contingencies (+/- 20%)				5,000				
				Field Cost - Poles & Overhead Conductors				29,000				
				FACILITATING SERVICES (2%)								
				INVESTIGATIONS (3%)								
				DESIGNS & SPECIFICATIONS (10%)								
				CONSTRUCTION SUPERVISION (12%)								
				OTHER COSTS (+/- 27%)							8,000	

CONSTRUCTION COST ESTIMATE

PROJECT: Central Valley Project	PREPARED BY: Regional Office, Sacramento, CA
DIVISION: West San Joaquin Division	ESTIMATE DATE: July 2007 (Revised after DEC)
UNIT: San Luis Unit -- Drainage System -- Westlands Water District-South	ESTIMATE TYPE: Feasibility
FEATURE: Drainage Feature Re-Evaluation Feasibility Study	PRICE LEVEL: April 2006

PROPERTY CLASS	IDENTIFIED PROPERTY	PLANT ACCOUNT	ITEM	DESCRIPTION	QUANTITY	UNIT	PRICE	AMOUNT	FIELD COST	TOTAL FIELD COST	NONCONTRACT COST	CONSTRUCTION COST
13	03			REUSE AREA C TRANSMISSION LINE - A 12kV, wood pole						250,000	70,000	320,000
				transmission line, extending 1 mile from the existing power line on								
				25th Avenue to the vicinity of Pumping Plant C.								
		182		Poles & Overhead Conductors					250,000			
			1	Wood Pole Transmission Line	1	mi	150,000.00	150,000				
			2	Service Poles, Transformer, Disconnect, & Meter	1	ea	20,000.00	20,000				
			3	Mobilization (+/- 5%)				8,500				
			4	Unlisted Items (+/- 15%)				31,500				
				Subtotal				210,000				
				Contingencies (+/- 20%)				40,000				
				Field Cost - Poles & Overhead Conductors				250,000				
				FACILITATING SERVICES (2%)								
				INVESTIGATIONS (3%)								
				DESIGNS & SPECIFICATIONS (10%)								
				CONSTRUCTION SUPERVISION (12%)								
				OTHER COSTS (+/- 27%)							70,000	

CONSTRUCTION COST ESTIMATE

PROJECT: Central Valley Project	PREPARED BY: Regional Office, Sacramento, CA
DIVISION: West San Joaquin Division	ESTIMATE DATE: July 2007 (Revised after DEC)
UNIT: San Luis Unit -- Drainage System -- Westlands Water District-South	ESTIMATE TYPE: Feasibility
FEATURE: Drainage Feature Re-Evaluation Feasibility Study	PRICE LEVEL: April 2006

PROPERTY CLASS	IDENTIFIED PROPERTY	PLANT ACCOUNT	ITEM	DESCRIPTION	QUANTITY	UNIT	PRICE	AMOUNT	FIELD COST	TOTAL FIELD COST	NONCONTRACT COST	CONSTRUCTION COST
13	04			WWD SOUTH TREATMENT PLANT TRANSMISSION LINE - A 12kV,						190,000	50,000	240,000
				wood pole transmission line extending 3/4 mile from the existing line								
				on 25th Avenue to the vicinity of the WWD South Treatment Plants.								
		182		Poles & Overhead Conductors					190,000			
			1	Wood Pole Transmission Line	0.75	mi	150,000.00	112,500				
			2	Service Poles, Transformer, Disconnect, & Meter	1	ea	20,000.00	20,000				
			3	Mobilization (+/- 5%)				6,625				
			4	Unlisted Items (+/- 15%)				20,875				
				Subtotal				160,000				
				Contingencies (+/- 20%)				30,000				
				Field Cost - Poles & Overhead Conductors				190,000				
				FACILITATING SERVICES (2%)								
				INVESTIGATIONS (3%)								
				DESIGNS & SPECIFICATIONS (10%)								
				CONSTRUCTION SUPERVISION (12%)								
				OTHER COSTS (+/- 27%)							50,000	

CONSTRUCTION COST ESTIMATE

PROJECT: Central Valley Project	PREPARED BY: Regional Office, Sacramento, CA
DIVISION: West San Joaquin Division	ESTIMATE DATE: July 2007 (Revised after DEC)
UNIT: San Luis Unit -- Drainage System -- Westlands Water District-South	ESTIMATE TYPE: Feasibility
FEATURE: Drainage Feature Re-Evaluation Feasibility Study	PRICE LEVEL: April 2006

PROPERTY CLASS	IDENTIFIED PROPERTY	PLANT ACCOUNT	ITEM	DESCRIPTION	QUANTITY	UNIT	PRICE	AMOUNT	FIELD COST	TOTAL FIELD COST	NONCONTRACT COST	CONSTRUCTION COST
15				GENERAL PROPERTY						6,110,000	1,690,000	7,800,000
	01			SCADA ELECTRICAL & CONTROL EQUIPMENT - This communication						6,110,000	1,690,000	7,800,000
				system consists of a collection of antennas which allow the flow of								
				water to the Reuse Areas to be controlled at the RO Treatment Plant.								
		100		Land and Rights								
				Costs of Land and Rights have been included with RO Treatment Plant.								
		180		Installed Supervisory Control Equipment					6,110,000			
				(1) Re-Use Pump Control Located at RO Treatment Plant					230,000			
				Fiber Optic Cable and Equipment								
			1	F&I fiber optic cable, 12-fiber single mode in 2" HDPE conduit	6,000	ft	12.00	72,000				
			2	F&I splice closure, Preformed Line Products Coyote Runt closure	2	ea	450.00	900				
			3	F&I termination/splice panels, Termination for 24 fibers at each panel	4	ea	500.00	2,000				
			4	Testing	1	ls	4,000.00	4,000				
				Communications Equipment								
			5	F&I NEMA 4 eqpmnt enclosure floor mount; panel, thermostat & fan	2	ea	5,070.00	10,140				
			6	F&I 40' antenna tower	2	ea	4,010.00	8,020				
			7	F&I Antenna tower accessories; Base plate, guying, grounding	2	ea	500.00	1,000				
			8	F&I Antenna; Spread Spectrum 2.3 - 2.5 GHz Parabolic	3	ea	800.00	2,400				
				F&I Coaxial cable, connectors and transient								
			9	Cable	200	ft	2.00	400				
			10	Connectors	6	ea	20.00	120				
			11	F&I WaveRider IP Router/Bridge	3	ea	2,500.00	7,500				
			12	F&I Network Switch with media converter; N-TRON 508FX2	5	ea	1,570.00	7,850				
				Control Equipment								
			13	F&I Rack mntd Re-use Area prioritization server w/ operating system	1	ea	2,500.00	2,500				
			14	F&I HMI monitor	2	ea	300.00	600				
			15	F&I prioritization software for Re-use Area	1	ea	32,800.00	32,800				

CONSTRUCTION COST ESTIMATE

PROJECT: Central Valley Project	PREPARED BY: Regional Office, Sacramento, CA
DIVISION: West San Joaquin Division	ESTIMATE DATE: July 2007 (Revised after DEC)
UNIT: San Luis Unit -- Drainage System -- Westlands Water District-South	ESTIMATE TYPE: Feasibility
FEATURE: Drainage Feature Re-Evaluation Feasibility Study	PRICE LEVEL: April 2006

PROPERTY CLASS	IDENTIFIED PROPERTY	PLANT ACCOUNT	ITEM	DESCRIPTION	QUANTITY	UNIT	PRICE	AMOUNT	FIELD COST	TOTAL FIELD COST	NONCONTRACT COST	CONSTRUCTION COST
15	01			SCADA ELECTRICAL & CONTROL EQUIPMENT (continued)								
		180		Installed Supervisory Control Equipment (continued)								
				(1) Re-Use Pump Control (continued)								
			16	Mobilization (+/- 5%)				7,612				
			17	Unlisted Items (+/- 15%)				23,976				
			18	Allowance for Procurement Strategies (+/- 5%)				11,182				
				Subtotal				195,000				
				Contingencies (+/- 20%)				35,000				
				Field Cost - (1) Re-Use Pump Control Located at RO Ttmnt Plnt				230,000				
				(2) Re-Use Pump Control Located at Pumping Plants					280,000			
				Communications Equipment								
			1	F&I NEMA 4 eqpmnt enclosure floor mount; panel, thermostat & fan	3	ea	5,070.00	15,210				
			2	F&I 40' antenna tower	3	ea	4,010.00	12,030				
			3	F&I Antenna tower accessories; Base plate, guying, grounding	3	ea	500.00	1,500				
			4	F&I Antenna; Spread Spectrum 2.3 - 2.5 GHz Parabolic	3	ea	1,100.00	3,300				
			5	F&I Antenna; Spread Spectrum 2.3 - 2.5 GHz Omni	3	ea	150.00	450				
				F&I Coaxial cable and connectors								
			6	Cable	200	ft	2.00	400				
			7	Connectors	6	ea	20.00	120				
			8	F&I WaveRider IP Router/Bridge	3	ea	2,500.00	7,500				
			9	F&I Network Switch with media converter; N-TRON 304TX	3	ea	320.00	960				
			10	F&I 2.4 GHz spread spectrum radios	3	ea	1,200.00	3,600				
				Control Equipment								
				F&I Plant PLC								
			11	Controller (Allen-Bradley compact Logix)	3	ea	3,800.00	11,400				
			12	F&I AC Digital input modules (Allen - Bradley 1769-IA81)	6	ea	200.00	1,200				
			13	F&I AC Digital output modules (Allen - Bradley 1769-OA8)	3	ea	350.00	1,050				
			14	F&I Analog Input Module (Allen - Bradley 1769-IF4I)	3	ea	550.00	1,650				
			15	F&I DC Digital input module (Allen - Bradley 1769-IQ16)	3	ea	280.00	840				
			16	F&I Power supply (Allen - Bradley 1769-PA4)	3	ea	300.00	900				
			17	F&I Operators panel	3	ea	2,800.00	8,400				

CONSTRUCTION COST ESTIMATE

PROJECT: Central Valley Project	PREPARED BY: Regional Office, Sacramento, CA
DIVISION: West San Joaquin Division	ESTIMATE DATE: July 2007 (Revised after DEC)
UNIT: San Luis Unit -- Drainage System -- Westlands Water District-South	ESTIMATE TYPE: Feasibility
FEATURE: Drainage Feature Re-Evaluation Feasibility Study	PRICE LEVEL: April 2006

PROPERTY CLASS	IDENTIFIED PROPERTY	PLANT ACCOUNT	ITEM	DESCRIPTION	QUANTITY	UNIT	PRICE	AMOUNT	FIELD COST	TOTAL FIELD COST	NONCONTRACT COST	CONSTRUCTION COST
15	01			SCADA ELECTRICAL & CONTROL EQUIPMENT (continued)								
		180		Installed Supervisory Control Equipment (continued)								
				(2) Re-Use Pump Control Located at Pumping Plants (continued)								
			18	F, T&I: Pumping Plant application, prioritization, & develpmnt software	3	ea	32,800.00	98,400				
				Power Devices								
			19	F&I UPS 500 VA APC	3	ea	1,580.00	4,740				
			20	F&I 24-VDC transducer pwr supply, Acopian Goldbox Linear regulated	3	ea	550.00	1,650				
			21	F&I 12 VDC security sys pwr supply, Acopian Goldbox Linear regulated	3	ea	550.00	1,650				
				Transient protection devices								
			22	F&I 120 VAC transient protection device; MCG Electronics Model 420	3	ea	305.00	915				
			23	F&I Din-rail mounted transient protection, receptacle Leviton	3	ea	75.00	225				
			24	F&I 4-to-20 mA transient protection modules, PROTEK	3	ea	120.00	360				
			25	F&I Coax cable transient protection modules	3	ea	150.00	450				
				Depth monitoring equipment								
			26	F&I NEMA 4 depth monitoring equipment enclosures with back panel	3	ea	500.00	1,500				
			27	F&I depth transducer (Druck PTX 1240)	3	ea	1,500.00	4,500				
			28	F&I 4-to-20 mA transient protection module	3	ea	75.00	225				
			29	Mobilization (+/- 5%)				9,256				
			30	Unlisted Items (+/- 15%)				29,157				
			31	Allowance for Procurement Strategies (+/- 5%)				6,462				
				Subtotal				230,000				
				Contingencies (+/- 20%)				50,000				
				Field Cost - (2) Re-Use Pump Control Located Pumping Plants				280,000				
				(3) Farm Pump Control					5,600,000			
				Communications Equipment								
			1	F&I NEMA 12 eqpmnt enclosure wall mount; panel, thermostat & fan	233	ea	4,000.00	932,000				
			2	F&I 15' pole antenna tower	214	ea	1,200.00	256,800				
			3	F&I Antenna tower grounding	214	ea	150.00	32,100				
			4	F&I yagi antenna	214	ea	500.00	107,000				
				F&I Coaxial cable and connectors								
			5	Cable	4,280	ft	2.00	8,560				

CONSTRUCTION COST ESTIMATE

PROJECT: Central Valley Project	PREPARED BY: Regional Office, Sacramento, CA
DIVISION: West San Joaquin Division	ESTIMATE DATE: July 2007 (Revised after DEC)
UNIT: San Luis Unit -- Drainage System -- Westlands Water District-South	ESTIMATE TYPE: Feasibility
FEATURE: Drainage Feature Re-Evaluation Feasibility Study	PRICE LEVEL: April 2006

PROPERTY CLASS	IDENTIFIED PROPERTY	PLANT ACCOUNT	ITEM	DESCRIPTION	QUANTITY	UNIT	PRICE	AMOUNT	FIELD COST	TOTAL FIELD COST	NONCONTRACT COST	CONSTRUCTION COST
15	01			SCADA ELECTRICAL & CONTROL EQUIPMENT (continued)								
		180		Installed Supervisory Control Equipment (continued)								
				(3) Farm Pump Control (continued)								
			6	Connectors	428	ea	20.00	8,560				
			7	F&I 2.4 GHz Spread Spectrum radios	214	ea	1,200.00	256,800				
				Control Equipment								
				F&I Plant RTU								
			8	Controller (Geomation 3300)	214	ea	1,000.00	214,000				
			9	F&I 2-AC Digital input modules (Geomation 1204 STAT)	466	ea	500.00	233,000				
			10	F&I AC Digital output modules (Geomation 1221 RO)	233	ea	550.00	128,150				
			11	F&I Analog Input Module (Geomation 1201 mA)	233	ea	525.00	122,325				
			12	F&I Power supply (Geomation 1110 PS24)	233	ea	200.00	46,600				
			13	F, T&I Software: Farm Well site software development software	214	ea	500.00	107,000				
				Transient protection devices								
			14	F&I 120 VAC transient protection device, MCG Electronics Model 420	233	ea	305.00	71,065				
			15	F&I 4-to-20 mA transient protection modules, PROTEK	233	ea	120.00	27,960				
				Depth monitoring equipment								
			16	F&I NEMA 4 depth monitoring equipment enclosures with back panel	233	ea	500.00	116,500				
			17	F&I depth transducer (Druck PTX 1240)	233	ea	1,500.00	349,500				
			18	F&I 4-to-20 mA transient protection module	233	ea	120.00	27,960				
				Electrical Equipment								
			19	Furnish and install into each communications equipment enclosure:	233	ea	2,800.00	652,400				
				1 hp motor starter								
				600 V, 3 position selector switch								
				Two 600 V oil tight momentary pushbuttons								
				600 V industrial control relay								
				Fuse and fuse block								
				Two 600 volt terminal blocks with 12 circuits								
				Two 600 volt push to test lamps								
				24 VDC Power Supply - Acopian Gold Box								

CONSTRUCTION COST ESTIMATE

PROJECT: Central Valley Project	PREPARED BY: Regional Office, Sacramento, CA
DIVISION: West San Joaquin Division	ESTIMATE DATE: July 2007 (Revised after DEC)
UNIT: San Luis Unit -- Drainage System -- Westlands Water District-South	ESTIMATE TYPE: Feasibility
FEATURE: Drainage Feature Re-Evaluation Feasibility Study	PRICE LEVEL: April 2006

PROPERTY CLASS	IDENTIFIED PROPERTY	PLANT ACCOUNT	ITEM	DESCRIPTION	QUANTITY	UNIT	PRICE	AMOUNT	FIELD COST	TOTAL FIELD COST	NONCONTRACT COST	CONSTRUCTION COST
15	01			SCADA ELECTRICAL & CONTROL EQUIPMENT (continued)								
		180		Installed Supervisory Control Equipment (continued)								
				(3) Farm Pump Control (continued)								
			20	Mobilization (+/- 5%)				184,914				
			21	Unlisted Items (+/- 15%)				582,479				
			22	Allowance for Procurement Strategies (+/- 5%)				234,327				
				Subtotal				4,700,000				
				Contingencies (+/- 20%)				900,000				
				Field Cost - (3) Farm Pump Control				5,600,000				
				Field Cost - Installed Supervisory Control Equipment				6,110,000				
				FACILITATING SERVICES (2%)								
				INVESTIGATIONS (3%)								
				DESIGNS & SPECIFICATIONS (10%)								
				CONSTRUCTION SUPERVISION (12%)								
				OTHER COSTS (+/- 27%)							1,690,000	

CONSTRUCTION COST ESTIMATE

PROJECT: Central Valley Project	PREPARED BY: Regional Office, Sacramento, CA
DIVISION: West San Joaquin Division	ESTIMATE DATE: July 2007 (Revised after DEC)
UNIT: San Luis Unit -- Drainage System -- Westlands Water District-South	ESTIMATE TYPE: Feasibility
FEATURE: Drainage Feature Re-Evaluation Feasibility Study	PRICE LEVEL: April 2006

PROPERTY CLASS	IDENTIFIED PROPERTY	PLANT ACCOUNT	ITEM	DESCRIPTION	QUANTITY	UNIT	PRICE	AMOUNT	FIELD COST	TOTAL FIELD COST	NONCONTRACT COST	CONSTRUCTION COST
				APPENDIX -- Unit Price for various styles of Mitigation Ponds.								
				One Pond unit is 80 Ac in size.								
12	05			MITIGATION - The following estimates represent the cost of one								
				80-acre site. In the Construction Cost Estimate, the Mitigation for								
				each area will be priced by the number of the various 80-acre								
				sites used.								
				(1) ALTERNATIVE HABITAT - SHALLOW WATER (For 1 - 80 acre pond)						2,900,000		
		130		Structures and Improvements					2,900,000			
			1	Excavation for moat	22,938	cy	4.50	103,221				
			2	Placement & compaction of embankment for road and ramps	17,200	cy	10.00	172,000				
			3	Gravel road surfacing, 6" deep	3,150	cy	65.00	204,750				
			4	Move earth within wetland interior	306,750	cy	5.00	1,533,750				
			5	Fencing, 6' high chain link fence	20	lf	30.00	600				
			6	Gates, 6' high x 20' wide double swing, chain link	2	ea	1,550.00	3,100				
			7	18" dia. HDPE pipe (assume DR32.5)	120	lf	50.00	6,000				
			8	Mobilization (+/- 5%)				101,171				
			9	Unlisted Items (+/- 15%)				275,408				
				Subtotal				2,400,000				
				Contingencies (+/- 20%)				500,000				
				Field Cost - Structures and Improvements				2,900,000				

CONSTRUCTION COST ESTIMATE

PROJECT: Central Valley Project	PREPARED BY: Regional Office, Sacramento, CA
DIVISION: West San Joaquin Division	ESTIMATE DATE: July 2007 (Revised after DEC)
UNIT: San Luis Unit -- Drainage System -- Westlands Water District-South	ESTIMATE TYPE: Feasibility
FEATURE: Drainage Feature Re-Evaluation Feasibility Study	PRICE LEVEL: April 2006

PROPERTY CLASS	IDENTIFIED PROPERTY	PLANT ACCOUNT	ITEM	DESCRIPTION	QUANTITY	UNIT	PRICE	AMOUNT	FIELD COST	TOTAL FIELD COST	NONCONTRACT COST	CONSTRUCTION COST
12	05			MITIGATION (continued)								
				(2) COMPENSATION HABITAT - SHALLOW HABITAT (For 1 - 80 acre pond)						2,333,000		
		130		Structures and Improvements					2,300,000			
			1	Excavation for moat	23,000	cy	4.50	103,500				
			2	Placement & compaction of embankment for road and ramps	22,000	cy	10.00	220,000				
			3	Gravel road surfacing, 6" deep	3,700	cy	65.00	240,500				
			4	Move earth within wetland interior	204,500	cy	5.00	1,022,500				
			5	Fencing, 6' high chain link fence	20	lf	30.00	600				
			6	Gates, 6' high x 20' wide double swing, chain link	2	ea	1,550.00	3,100				
			7	Mobilization (+/- 5%)				79,510				
			8	Unlisted Items (+/- 15%)				230,290				
				Subtotal				1,900,000				
				Contingencies (+/- 20%)				400,000				
				Field Cost - Structures and Improvements				2,300,000				
		152		Waterways					33,000			
			1	6" dia. Plastic siphon tubes, 10' long (assume HDPE DR32.5)	24	ea	110.00	2,640				
			2	18" dia. HDPE pipe (assume DR32.5)	120	lf	50.00	6,000				
			3	12" gate valves	4	ea	3,500.00	14,000				
			4	Mobilization (+/- 5%)				1,132				
			5	Unlisted Items (+/- 15%)				3,228				
				Subtotal				27,000				
				Contingencies (+/- 20%)				6,000				
				Field Cost - Waterways				33,000				

CONSTRUCTION COST ESTIMATE

PROJECT: Central Valley Project	PREPARED BY: Regional Office, Sacramento, CA
DIVISION: West San Joaquin Division	ESTIMATE DATE: July 2007 (Revised after DEC)
UNIT: San Luis Unit -- Drainage System -- Westlands Water District-South	ESTIMATE TYPE: Feasibility
FEATURE: Drainage Feature Re-Evaluation Feasibility Study	PRICE LEVEL: April 2006

PROPERTY CLASS	IDENTIFIED PROPERTY	PLANT ACCOUNT	ITEM	DESCRIPTION	QUANTITY	UNIT	PRICE	AMOUNT	FIELD COST	TOTAL FIELD COST	NONCONTRACT COST	CONSTRUCTION COST
12	05			MITIGATION (continued)								
				(3) COMPENSATION HABITAT - DEEP WATER (For 1 - 80 acre pond)						5,200,000		
		130		Structures and Improvements					5,200,000			
			1	Excavation for moat	23,000	cy	4.50	103,500				
			2	Placement & compaction of embankment for road and ramps	15,500	cy	10.00	155,000				
			3	Gravel road surfacing, 6" deep	3,775	cy	65.00	245,375				
			4	Move earth within wetland interior	615,000	cy	5.00	3,075,000				
			5	Fencing, 6' high chain link fence	20	lf	30.00	600				
			6	Gates, 20' wide double swing, chain link	2	ea	1,550.00	3,100				
			7	Mobilization (+/- 5%)				179,129				
			8	Unlisted Items (+/- 15%)				538,296				
				Subtotal				4,300,000				
				Contingencies (+/- 20%)				900,000				
				Field Cost - Structures and Improvements				5,200,000				

CONSTRUCTION COST ESTIMATE

PROJECT: Central Valley Project	PREPARED BY: Regional Office, Sacramento, CA
DIVISION: West San Joaquin Division	ESTIMATE DATE: July 2007 (Revised after DEC)
UNIT: San Luis Unit -- Drainage System -- Westlands Water District-South	ESTIMATE TYPE: Feasibility
FEATURE: Drainage Feature Re-Evaluation Feasibility Study	PRICE LEVEL: April 2006

PROPERTY CLASS	IDENTIFIED PROPERTY	PLANT ACCOUNT	ITEM	DESCRIPTION	QUANTITY	UNIT	PRICE	AMOUNT	FIELD COST	TOTAL FIELD COST	NONCONTRACT COST	CONSTRUCTION COST
12	05			MITIGATION (continued)								
				(4) APPURTENANT FACILITIES (For 1 - 80 acre pond)						1,210,000		
		130		Structures and Improvements					350,000			
				Based on 2:1 Side Slopes:								
			1	Excavation	17,692	cy	4.50	79,614				
			2	Backfill	16,923	cy	3.00	50,769				
			3	Compacting Backfill	1,731	cy	8.50	14,714				
				Trench Box Earthwork (based on vertical side slopes):								
			4	Excavation	9.6	cy	15.00	144				
			5	Backfill	8.5	cy	7.00	60				
			6	Compacting Backfill	1.2	cy	25.00	30				
				Outlet Items:								
			7	Concrete	13	cy	1,000.00	13,000				
			8	Cementitious Material	3.8	tons	170.00	646				
			9	Reinforcement Steel	1,615	lbs	1.75	2,826				
			10	Unwatering	1	ls	42,308.00	42,308				
			11	Miscellaneous Metalwork - Steel	3,846	lbs	7.00	26,922				
			12	Concrete	5.8	cy	1,000.00	5,800				
			13	Cement	1.54	tons	175.00	270				
			14	Reinforcement	769	lbs	1.75	1,346				
			15	Excavation, common	42	cy	15.00	630				
			16	Backfill	31	cy	10.00	310				
			17	Compacting backfill	31	cy	10.00	310				
			18	Gravel surfacing	3.8	cy	65.00	247				
			19	Mobilization (+/- 5%)				11,997				
			20	Unlisted Items (+/- 15%)				38,058				
				Subtotal				290,000				
				Contingencies (+/- 20%)				60,000				
				Field Cost - Structures and Improvements				350,000				

CONSTRUCTION COST ESTIMATE

PROJECT: Central Valley Project	PREPARED BY: Regional Office, Sacramento, CA
DIVISION: West San Joaquin Division	ESTIMATE DATE: July 2007 (Revised after DEC)
UNIT: San Luis Unit -- Drainage System -- Westlands Water District-South	ESTIMATE TYPE: Feasibility
FEATURE: Drainage Feature Re-Evaluation Feasibility Study	PRICE LEVEL: April 2006

PROPERTY CLASS	IDENTIFIED PROPERTY	PLANT ACCOUNT	ITEM	DESCRIPTION	QUANTITY	UNIT	PRICE	AMOUNT	FIELD COST	TOTAL FIELD COST	NONCONTRACT COST	CONSTRUCTION COST
12	05			MITIGATION (continued)								
				(4) APPURTENANT FACILITIES (continued)								
		152		Waterways					630,000			
			1	12 inch diameter DR32.5	1,280	lf	29.00	37,120				
			2	24 inch diameter DR32.6	4,570	lf	75.00	342,750				
			3	Inlet Stand Pipe (assumes 100' of 6" dia sch 40 stl pipe/ea)	1	ea	15,000.00	15,000				
			4	2 inch air valves	1.7	ea	1,000.00	1,700				
			5	18" Slide Gate - steel (for draining)	1	ea	5,000.00	5,000				
			6	2' x 3' Adjustable Weir (354 lbs/ea)	2	ea	7,000.00	14,000				
				Manual handwheel operator - 1680 lb capacity								
			7	6" valve (assume gate valve)	1	ea	1,500.00	1,500				
			8	Water Meter	1	ea	15,000.00	15,000				
			9	Mobilization (+/- 5%)				21,604				
			10	Unlisted Items (+/- 15%)				66,327				
				Subtotal				520,000				
				Contingencies (+/- 20%)				110,000				
				Field Cost - Waterways				630,000				

CONSTRUCTION COST ESTIMATE

PROJECT: Central Valley Project	PREPARED BY: Regional Office, Sacramento, CA
DIVISION: West San Joaquin Division	ESTIMATE DATE: July 2007 (Revised after DEC)
UNIT: San Luis Unit -- Drainage System -- Westlands Water District-South	ESTIMATE TYPE: Feasibility
FEATURE: Drainage Feature Re-Evaluation Feasibility Study	PRICE LEVEL: April 2006

PROPERTY CLASS	IDENTIFIED PROPERTY	PLANT ACCOUNT	ITEM	DESCRIPTION	QUANTITY	UNIT	PRICE	AMOUNT	FIELD COST	TOTAL FIELD COST	NONCONTRACT COST	CONSTRUCTION COST
12	05			MITIGATION (continued)								
				(4) APPURTENANT FACILITIES (continued)								
		160		Pumps and Prime Movers					230,000			
			1	Vertical Turbine Unit; 2-stg; 1 CFS; Rated 450 gpm; TDH=20 ft.	1	ea	50,000.00	50,000				
				w/ TEFC Induction motor @ 3 hp; 1200 rpm								
			2	Vertical Turbine Unit; 1-stg; 5 CFS; Rated 2500 gpm; TDH=25 ft.	1	ea	100,000.00	100,000				
				w/ TEFC Induction motor @ 25 hp; 900 rpm								
			3	Mobilization (+/- 5%)				7,500				
			4	Unlisted Items (+/- 15%)				23,625				
				Subtotal				190,000				
				Contingencies (+/- 20%)				40,000				
				Field Cost - Pumps and Prime Movers				230,000				

Attachment 4
Implementation Schedules

Drainage-Impaired Alternative

Implementation Schedule

A detailed implementation schedule for the Drainage-Impaired Alternative is provided herein. A schedule with additional detail would be provided during final design of the features. All schedules were developed with consideration of promptly providing drainage service and without consideration of expected yearly funding.

The Drainage-Impaired Alternative shows the required tasks for the Northerly Area and is completed in approximately 6 years. Additional mitigation work may occur after the 5-year monitoring period of the initial mitigation.

General Schedule Information and Assumptions

The schedules begin with Year 1 assuming Congress authorizes an increase in the construction cost ceilings of the San Luis Unit. The schedules begin with the design data collection necessary for final designs. Design data collection is concurrent with the start of land acquisitions, permits, and easements for each area. While land acquisitions, permits, and easements continue, the final designs begin. As final designs are completed, contracts are procured to begin construction.

Design Data Collection

Design data collection involves gathering data required to complete the final designs. The following list is not complete but presents a general idea of the design data requirements:

- Maps
- Surface data, including topography and existing structures
- Survey control
- Aerial and ground surveys
- Geotechnical investigations and data collection, including groundwater elevations, corrosivity of soil, and geological logs of subsurface explorations at site locations and borrow areas

- Canal and ditch water surface elevations and velocities
- Weather data
- Crop data
- Physical features including power line information and utilities
- Data on local commercial plants for concrete, aggregate sources, steel, masonry; environmental considerations
- Water quality data
- Data from the reverse osmosis demonstration plant
- Data from the selenium removal demonstration plants
- Client preferences and more

Final Designs

Final designs for each feature begin after sufficient design data is collected. Designs are completed in the same order as needed for construction. The Drainage-Impaired Alternative requires approximately 3 years for final design after the design data collection. This 3-year time period includes time for a reverse osmosis demonstration plant, one and possibly two selenium removal demonstration plants, and an evaporation pond demonstration. A complete package including the specifications and drawings would be provided at the end of each feature's final design to be used to procure the construction contractor. Some features would be bundled together to be in a single contract rather than in separate contracts for every feature. An example of these combined contracts is to include collection pipelines with the reuse construction. Another example is to include the regulating tanks with the reverse osmosis plant. The assumptions used to bundle contracts would be re-evaluated during final designs based on client input and funding and scheduling requirements.

Contracts

The schedule allows 6 months to procure the construction contracts. This 6-month timeframe is adequate for using either the Invitation for Bids method (sealed bid) or Request for Proposal method (negotiated contract). Decisions on contract types would be finalized during final designs.

The exception to the standard construction contract is the procurement for design and construction of the selenium removal biological plant which would likely be a design/build contract. The processes used for the selenium removal are proprietary; and, therefore, the contract would include design and construction services. There are, however, several different proprietary technology vendors that could potentially supply the required treatment services. The anticipated

contracting process would include an initial open competition for constructing at least two demonstration plants that would be used to collect data for final design and compare the different technologies. The contract would include a provision whereby the Bureau pf Reclamation would select (after evaluation of the demonstration plants) one of the competing technology vendors to design and build the full-scale treatment plant.

Construction

Initial construction for the Drainage-Impaired Alternative includes:

- Collection conveyance pipelines
- Pumping plants that provide irrigation water to the reuse areas
- Pipelines to supply irrigation water to reuse areas
- Reuse areas subsurface drain work, tile drains and conveyance system

The collection and reuse system could operate approximately 1 year before the completion of the entire system. Construction of the remaining pumping plants would begin early to allow the subsurface portion of the plants to be constructed prior to applying water to the reuse areas.

All remaining features would be constructed concurrently and include completion of the pumping plants that send water to treatment, regulating tanks, pretreatment, reverse osmosis plant, selenium removal biological plant, the evaporation ponds, bypass pipelines, and all pipelines/conveyance between these features and to the Outside Canal. The construction of the reverse osmosis and selenium removal plants would be separate contracts and are each expected to require 2 years to complete.

The mitigation construction is performed in two phases. Roughly, one-half of the total mitigation area for all areas is developed in the initial phase. The initial phase includes mitigation to be constructed at the Northerly evaporation pond sites and includes off-site compensation mitigation. The remaining mitigation (Phase 2) would be constructed after monitoring these initial sites for approximately 5 years.

Durations for the construction contracts were determined by applying production rates to all of the quantities provided for each feature. When bundling contracts, it is assumed that some concurrent activities would occur to complete construction within the allotted timeframe. Impacts from winter weather conditions were considered when determining the construction timeframes. Additional time is added to each contract to allow for initial contractor submittals, procurement of materials, and mobilizing onsite.

Schedule

The construction schedule for the Drainage-Impaired Alternative is presented at the end of this section.

Water Needs Alternative

Implementation Schedule

A detailed implementation schedule for the Water Needs Alternative is provided herein. The schedule shows the tasks for providing drainage service for the Northerly Area and Westlands, which spans approximately 10 years from design data collection through construction of all features, with additional mitigation work finishing after 12 years have elapsed.

General Schedule Information and Assumptions

The schedules begin with Year 1, assuming Congress authorizes an increase in the construction cost ceilings of the San Luis Unit. The schedules begin at this point with the design data collection necessary for final designs. Design data collection is concurrent with the start of land acquisitions, permits, and easements for each area. While land acquisitions, permits, and easements continue, the final designs begin. As final designs are completed, contracts are procured to begin construction.

Under the Water Needs Land Retirement Alternative, the Northerly Area is almost completely built out before beginning construction on the Westlands areas. The Westlands are divided into three areas: Westlands Central, Westlands North, and Westlands South. The order of construction for Westlands is based on the areas with the highest groundwater elevation and, thus, requiring more immediate drainage service.

Design Data Collection

Design data collection involves gathering data required to complete the final designs. The following list is not complete but presents a general idea of the design data requirements:

- Maps
- Surface data, including topography and existing structures
- Survey control
- Aerial and ground survey
- Geotechnical investigations and data collection, including groundwater elevations, corrosivity of soil, and geological logs of subsurface explorations at site locations and borrow areas
- Canal and ditch water surface elevations and velocities
- Weather data

- Crop data
- Physical features including power line information and utilities
- Data on local commercial plants for concrete, aggregate sources, steel, masonry
- Environmental considerations
- Water quality data
- Data from the reverse osmosis demonstration plant
- Data from the selenium removal demonstration plants
- Client preferences and more

Design data collection occurs in the following order: the Northerly Area, Westlands Central, Westlands North, and Westlands South. Design data collection generally requires 1 year for each area; however, it is anticipated that due to the acreage involved with the Westlands Central area, the design data collection would require additional time.

Final Designs

Final designs for each feature begin after sufficient design data is collected. As with the design data collection, final designs begin with the Northerly Area. Designs are completed in the same order as needed for construction. Final designs for the In-Valley Water Needs Land Retirement Alternative are completed in approximately 9 years. There is a 3-year time period for the final designs of the Northerly Area which include time for reverse osmosis and selenium removal demonstration plants. A complete package including the specifications and drawings would be provided at the end of each feature's final design to be used to procure the construction contractor. The assumptions used to bundle contracts would be re-evaluated during final designs based on client input and funding and scheduling requirements.

Because of the Westlands order of construction, the final designs for all features in each area would be 60-percent complete prior to finalizing the designs for one feature. This assumption would help to prevent rework on the initial feature designs. For example, the Westlands Central design begins with reuse systems F and G while the design for Central reuse system H is not completed for another 3 years. Therefore, knowledge gained from the initial reuse design would be beneficial to the subsequent reuse designs. This logic is also applicable to the staged designs for Westlands South and Westlands North; however, this rationale would not be applicable to the Northerly Area because all designs are completed concurrently.

Contracts

The schedule allows 6 months to procure the construction contracts. This 6-month timeframe is adequate for using either the Invitation for Bids method (sealed bid) or Request for Proposal method (negotiated contract). Decisions on contract types would be finalized during final designs.

The exception to the standard construction contract is the procurement for design and construction of the selenium removal biological plants which would be a design/build contract. The processes used for the selenium removal are proprietary; and, therefore, the contract would include design and construction services. There are, however, several different proprietary technology vendors that could potentially supply the required treatment services. The anticipated contracting process would include an initial open competition for constructing at least two demonstration plants that would be used to collect data for final design and compare the different technologies. The contract would include a provision whereby Reclamation would select (after evaluation of the demonstration plants) one of the competing technology vendors to design and build the full-scale treatment plant.

Construction

This alternative includes the Northerly Area and Westlands. The first portion of the Northerly Area system to be constructed includes:

- Collection conveyance pipelines
- Pumping plants that provide irrigation water to the reuse areas
- Pipelines to supply irrigation water to reuse areas
- Reuse areas subsurface drain work, tile drains and conveyance system

The Westlands drainage features are similar to the Northerly Area; however, more collection pipelines are required for collecting the drained water from each area/field. Beginning with Westlands Central, the reuse system would be constructed up to 1 year prior to completion of the reverse osmosis and selenium removal plants. The reuse system includes the collection pipelines, the reuse areas, and the tailwater pumps. As with the Northerly Area, the pumping plants for each area would be constructed along with the reuse systems to allow the subsurface portion of the plants to be completed prior to applying water to the reuse areas. The remainder of a system includes completing the pumping plants, constructing the regulating tank, reverse osmosis plant, selenium removal biological plant, evaporation ponds, conveyance of product water to a ditch or canal, and all other pipelines/conveyance between features.

The areas with the highest groundwater elevation are the first areas to be serviced. The order of construction for the Westlands is as follows:

Central F, G
North M
South A, B, C
Central D, E
North O
Central H, North N

Mitigation occurs in two phases. Phase 1 includes half of the total mitigation around the evaporation ponds and at off-site locations. After approximately 5 years of monitoring the Phase 1 mitigation sites, the remaining mitigation (Phase 2) would be constructed.

Schedule

The construction schedule for the Water Needs Alternative is presented at the end of this section.

Bureau of Reclamation - Central Valley Project - West San Joaquin Division - San Luis Unit - California
Drainage Feature Re-Evaluation Feasibility Study: Drainage Impaired Alternative - Northerly Area

ID	Task Name
1	**DESIGN DATA COLLECTION FOR FINAL DESIGNS**
2	Right of Entry, Right of Ways, Easements, etc, for Design Data Collection & Survey Controls
3	Northerly Area Design Data Collection & Establish Survey Control
4	Establish and Maintain SLD Project Office
5	**FINAL DESIGNS**
6	**Northerly Area Final Designs**
7	Collection Systems
8	Reuse Areas / Irrigation
9	Pumping Plants & Conveyance
10	**Reverse Osmosis (RO) Treatment Plant**
11	Procure Vendor for RO Demonstration Plant
12	Build RO Demo and Startup Plant
13	Run Demonstrations for 7 months
14	Final Design of RO Plant
15	Continue RO Demonstrations for 11 months
16	**Selenium (Se) Removal Biological Plant**
17	Procure Vendor(s) for Se Demonstration Plant(s)
18	Build Selenium Removal Demo(s) and Startup Plant(s)

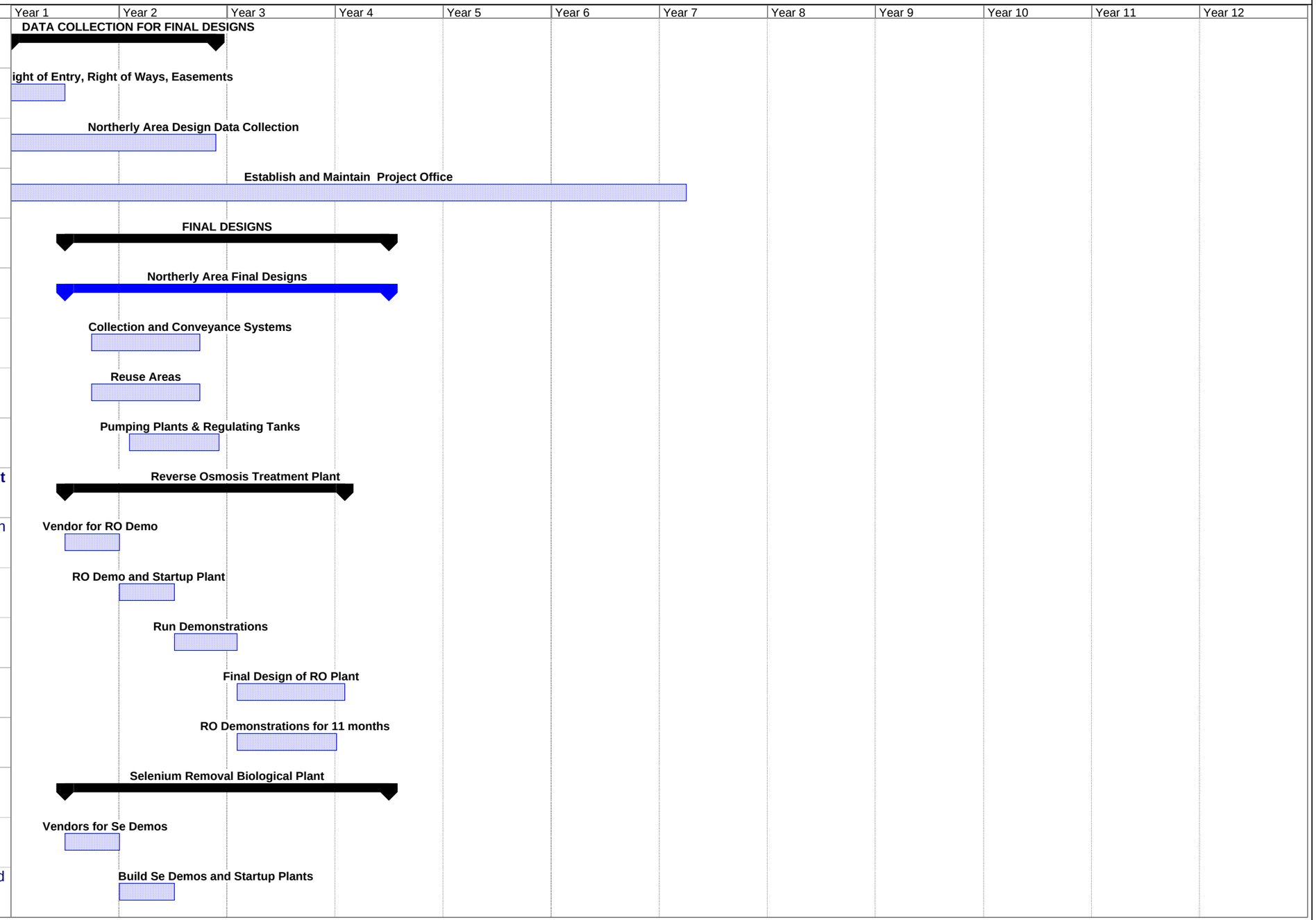

Bureau of Reclamation - Central Valley Project - West San Joaquin Division - San Luis Unit - California
Drainage Feature Re-Evaluation Feasibility Study: Drainage Impaired Alternative - Northerly Area

ID	Task Name
19	Run Demonstrations for 12 months
20	Final Design of Se Plant
21	Continue Se Demonstrations for 6 months
22	**Evaporation Ponds & Mitigation at Ponds**
23	Procure Vendor for Evap Pond Demonstration
24	Construct Evap Pond Demonstration
25	Run Demonstration for 7 months
26	Final Design of Evaporation Ponds
27	Continue Evap Pond Demo. for 11 months
28	Final Design - Mitigation & Compensation Off-Site
29	**LAND ACQUISITIONS - For Construction and For Retirement**
30	Includes Lands Obtained by Fee, Easements, & Right of Ways. Does not include Non-Irrigation Covenants
31	Non-Irrigation Covenants: Retired Lands
32	PERMITS: All including hazardous waste and cultural resource surveys, facility permits, etc.
33	**SOLICITATIONS / ACQUISITIONS OF CONTRACTS**
34	**Northerly Area Construction Contracts**
35	Reuse Areas & Collection System
37	Pumping Plants & Conveyance Contracts

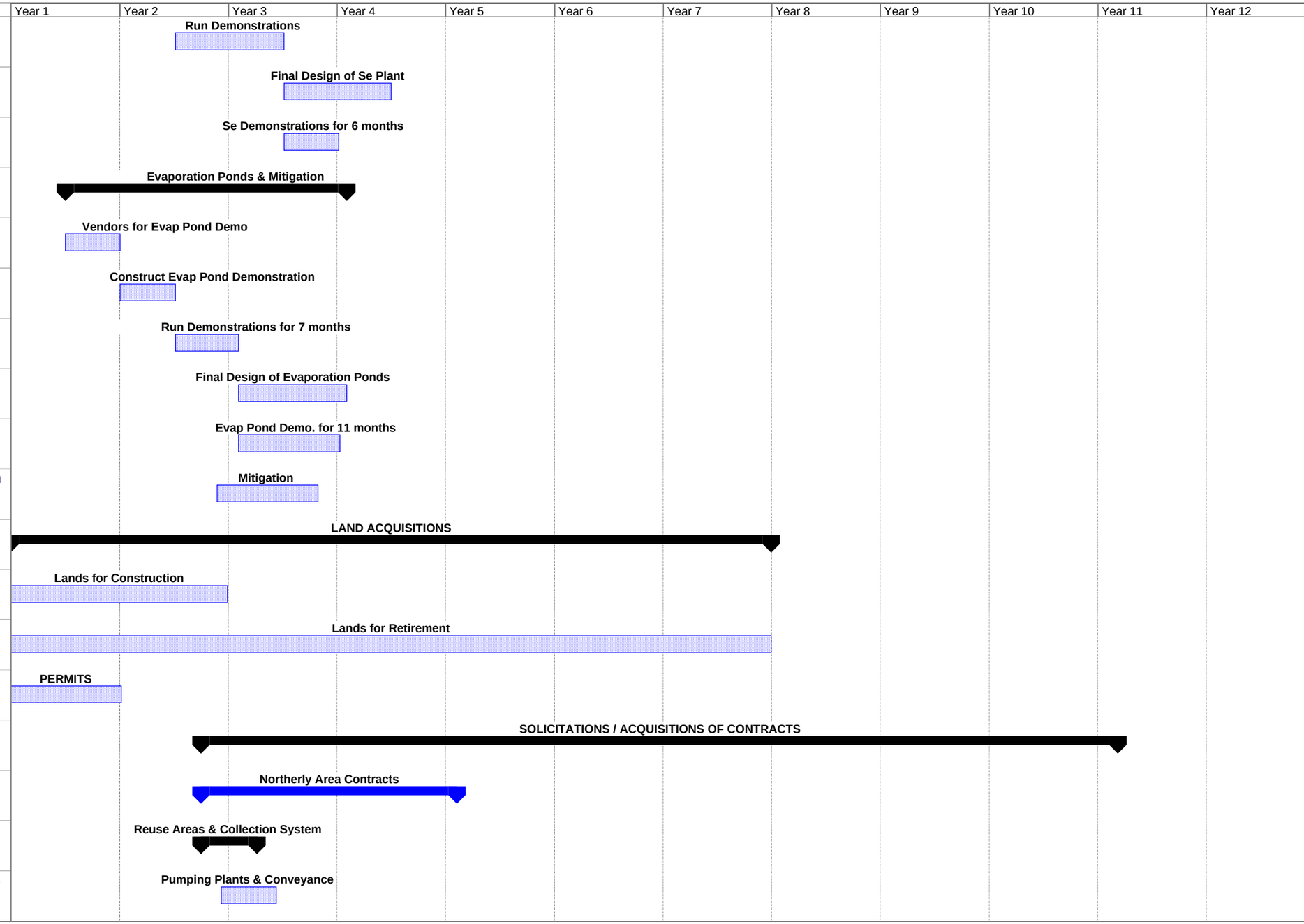

Bureau of Reclamation - Central Valley Project - West San Joaquin Division - San Luis Unit - California
Drainage Feature Re-Evaluation Feasibility Study: Drainage Impaired Alternative - Northerly Area

ID	Task Name
38	Reverse Osmosis Treatment Plant & Reg Tanks Contract
39	Design/Build Contract: Selenium Removal Design & Construction
40	Evaporation Ponds & Mitigation at Ponds Contract
41	Mitigation Compensation Off-Site (Phase 1)
42	**Phase 2 Mitigation**
43	Additional Mitigation at Evap Ponds & Offsite (Phase 2)
44	**CONSTRUCTION**
45	**Northerly Area - Construction**
46	Reuse Areas, Canal-Side Pump Plants, Conv to Reuse, Collection System
48	Pumping Plant Foundations
49	Pumping Plants & Conveyance to Treatment
50	Reverse Osmosis Treatment Plant & Reg Tanks
51	Selenium Removal Biological Plant
52	Evaporation Ponds & Mitigation at Ponds
53	Mitigation Compensation Off-Site
54	Transmission Lines & SCADA Systems
55	Northerly Area Complete
56	Northerly Mitigation Phase 2

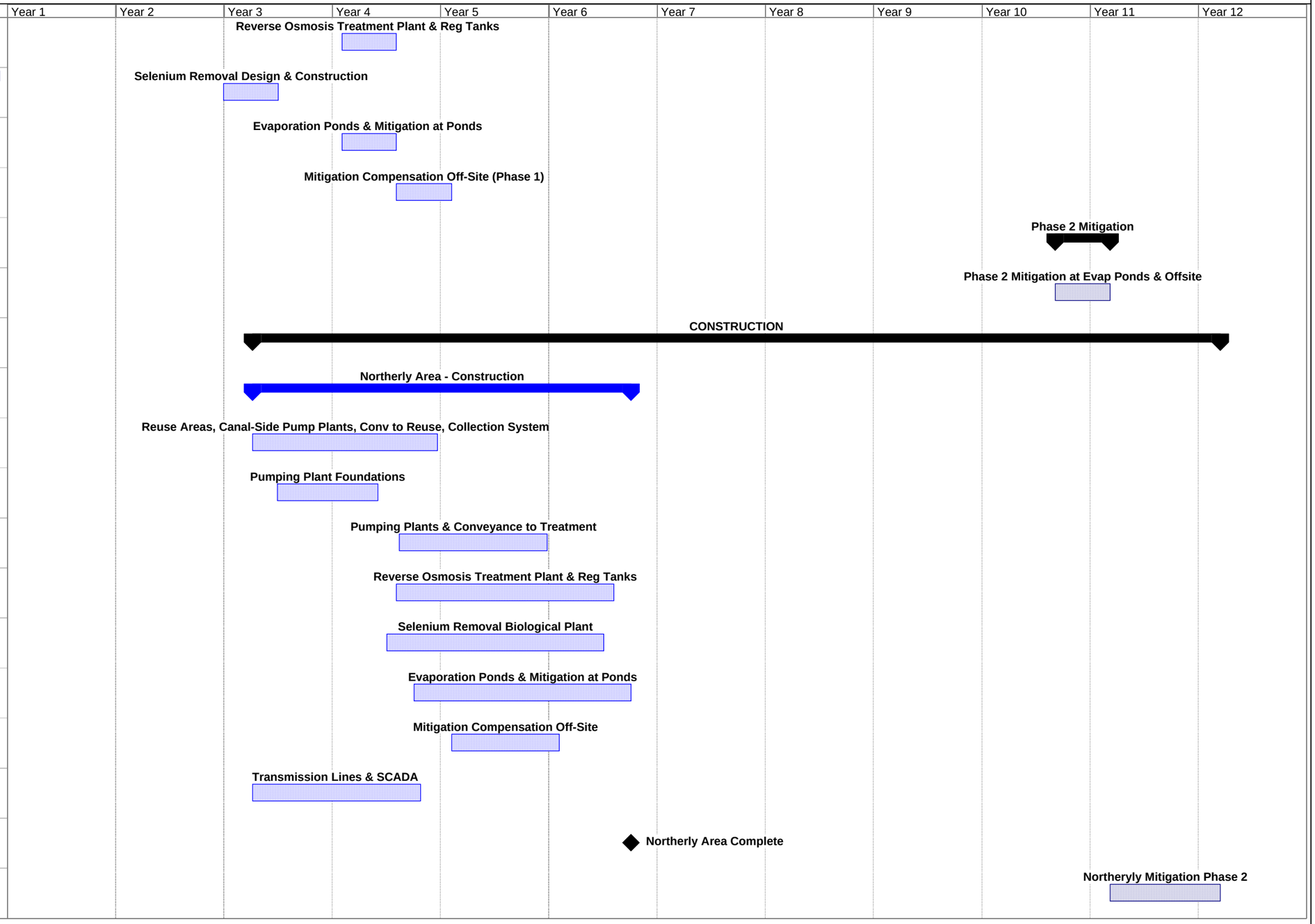

Bureau of Reclamation - Central Valley Project - West San Joaquin Division - San Luis Unit - California

Drainage Feature Re-Evaluation Feasibility Study: Water Needs Alternative - Northerly Area and Westlands Water District

ID	Task Name
1	**DESIGN DATA COLLECTION FOR FINAL DESIGNS**
2	Right of Entry, Right of Ways, Easements, etc, for Design Data Collection & Survey Controls
3	Northerly Area Design Data Collection & Establish Survey Control
4	Westlands Central Design Data Collection & Establish Survey Control
5	Westlands North Design Data Collection & Establish Survey Control
6	Westlands South Design Data Collection & Establish Survey Control
7	**Establish and Maintain SLD Project Office**
8	**FINAL DESIGNS**
9	**Northerly Area Final Designs**
10	Collection Systems
11	Reuse Areas / Irrigation
12	Pumping Plants & Conveyance
13	**Reverse Osmosis (RO) Treatment Plant**
14	Procure Vendor for RO Demonstration Plant
15	Build RO Demo and Startup Plant
16	Run Demonstrations for 7 months
17	Final Design of RO Plant
18	Continue RO Demonstrations for 11 months
19	**Selenium (Se) Removal Biological Plant**
20	Procure Vendor(s) for Se Demonstration Plant(s)
21	Build Selenium Removal Demo(s) and Startup Plant(s)
22	Run Demonstrations for 12 months
23	Final Design of Se Plant
24	Continue Se Demonstrations for 6 months
25	**Evaporation Ponds & Mitigation at Ponds**

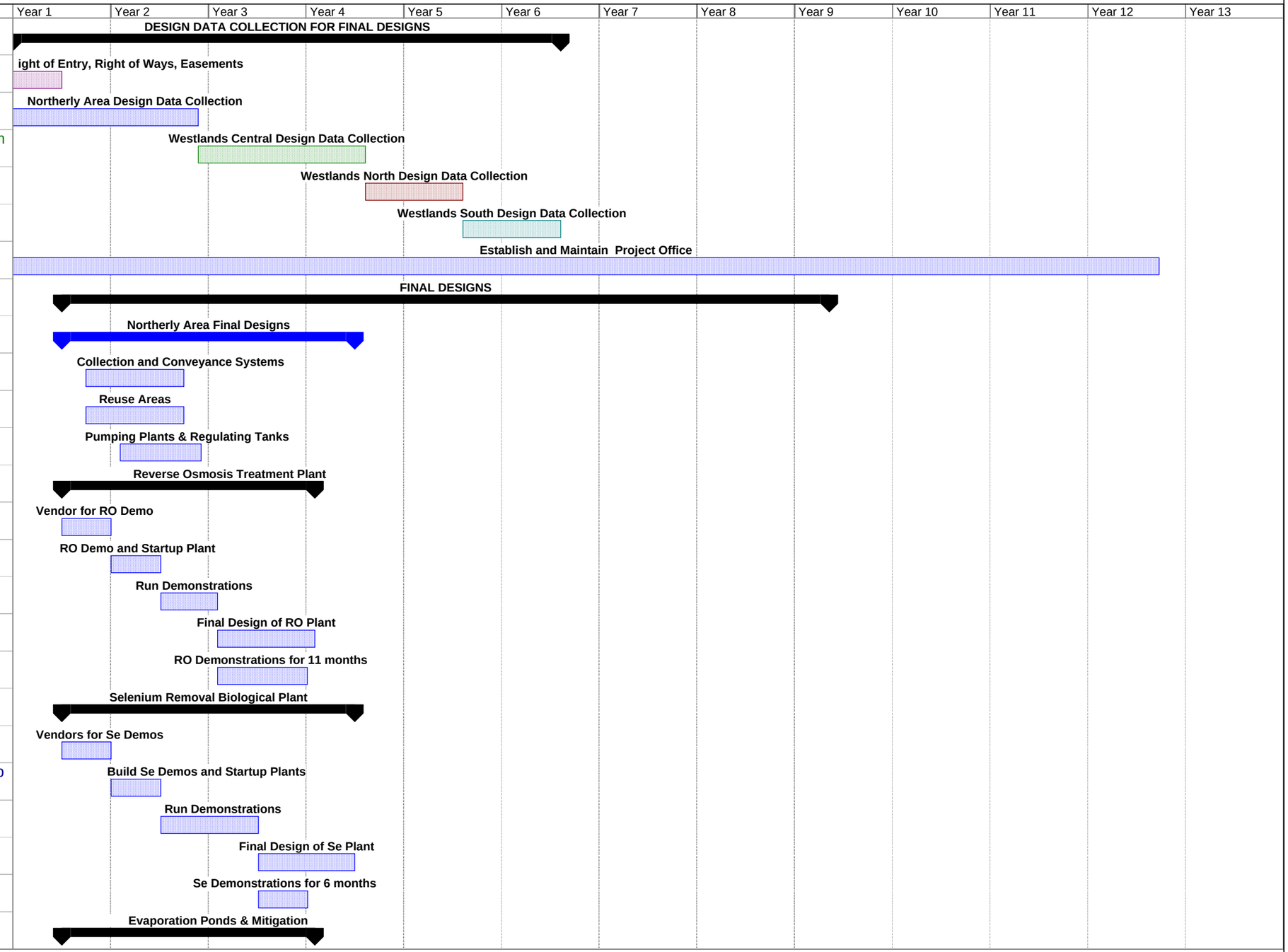

Bureau of Reclamation - Central Valley Project - West San Joaquin Division - San Luis Unit - California

Drainage Feature Re-Evaluation Feasibility Study: Water Needs Alternative - Northerly Area and Westlands Water District

ID	Task Name
26	Procure Vendor for Evap Pond Demonstration
27	Construct Evap Pond Demonstration
28	Run Demonstration for 7 months
29	Final Design of Evaporation Ponds
30	Continue Evap Pond Demo. for 11 months
31	Mitigation Compensation Off-Site
32	**Westlands Central Final Designs (FD)**
33	60% Final Designs - Westlands Central
34	F, G Reuse, Irrigation & Tailwater Systems
35	F, G Collection Systems
36	Conveyance, F & G Pumps
37	Evap Ponds, Mitigation at Evap Ponds
38	RO Treatment, Reg Tank
39	Selenium Treatment Plant (A/E Contract)
40	D, E Reuse, Irrigation, Tailwater Systems
41	D, E Collection Systems
42	D, E Pumps, Conveyance
43	H Reuse, Irrigation, Tailwater Systems
44	H Collection Systems
45	H Pumps, Conveyance
46	**Westlands North Final Designs**
47	60% Final Designs - Westlands North
48	M: Reuse, Irrigation, Tailwater System
49	M: Collection Systems
50	Conveyance, M Pumping Plant

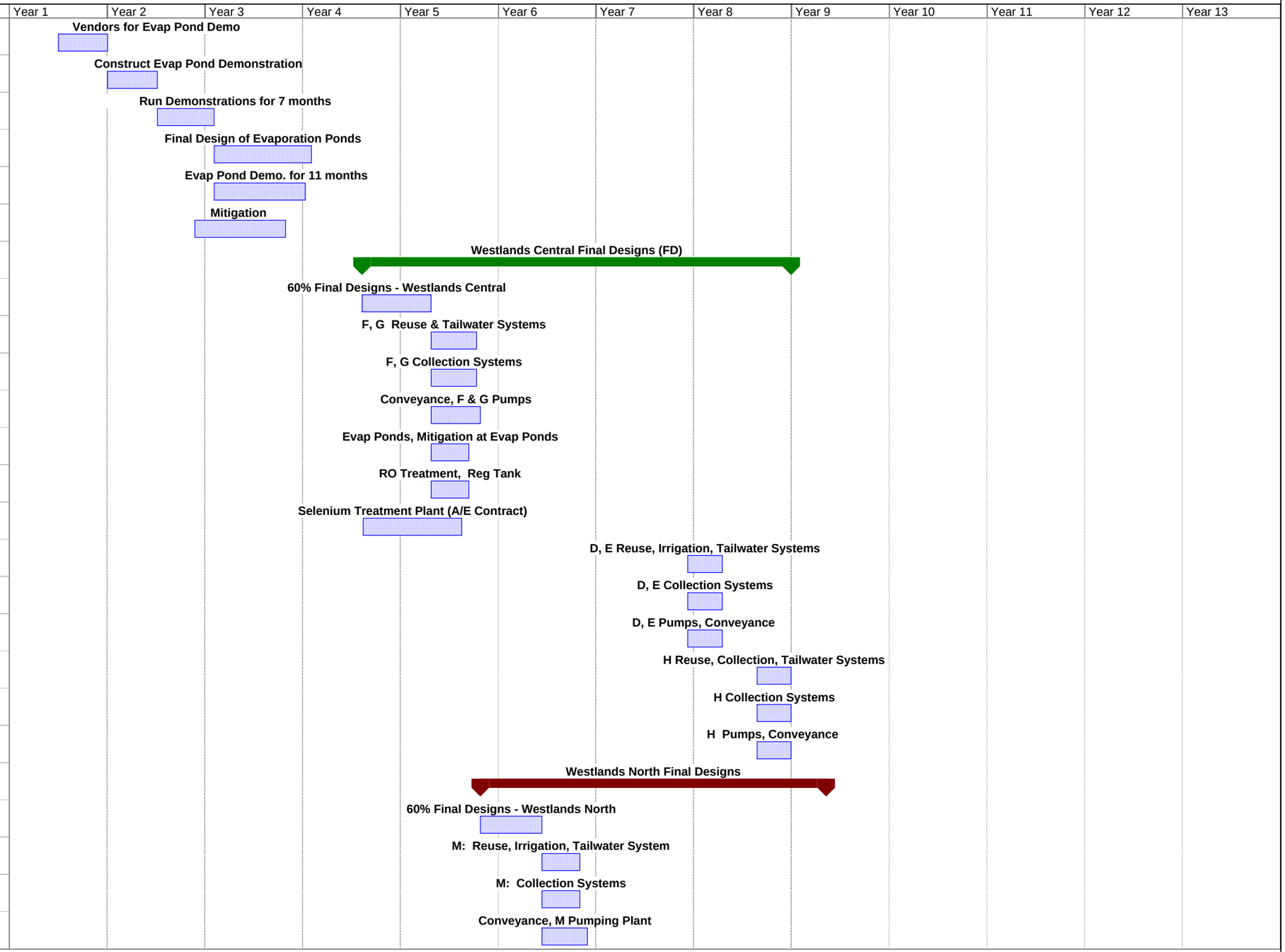

Bureau of Reclamation - Central Valley Project - West San Joaquin Division - San Luis Unit - California

Drainage Feature Re-Evaluation Feasibility Study: Water Needs Alternative - Northerly Area and Westlands Water District

ID	Task Name
51	Evaporation Ponds, Mitigation at Ponds
52	RO Treatment, Regulating Tank
53	Selenium Removal Plant (A/E Contract)
54	O: Reuse, Irrigation, Tailwater System
55	O: Collection Systems
56	O Pumping Plant, Conveyance
57	N: Reuse, Irrigation, Tailwater System
58	N: Collection Systems
59	N: Pumping Plant, Conveyance
60	**Westlands South Final Designs**
61	60% Final Designs - Westlands South
62	A, B, C: Reuse, Irrigation, Tailwater Systems
63	A, B, C Collection Systems
64	Conveyance, A, B, C Pumping Plants
65	Evaporation Ponds, Mitigation at Ponds
66	RO Treatment, Regulating Tank
67	Selenium Removal Plant (A/E contract)
68	**LAND ACQUISITIONS - For Construction and For Retirement**
69	**Includes Lands Obtained by Fee, Easements, and Right of Ways. Does not include Non-Irrigation Covenants**
70	Northerly Area Land Acquisitions
71	Westlands Central Land Acquisitions
72	Westlands North Land Acquisitions
73	Westlands South Land Acquisitions
74	**Non-Irrigation Covenants: Retired Lands**
75	Northerly Area Land Acquisitions

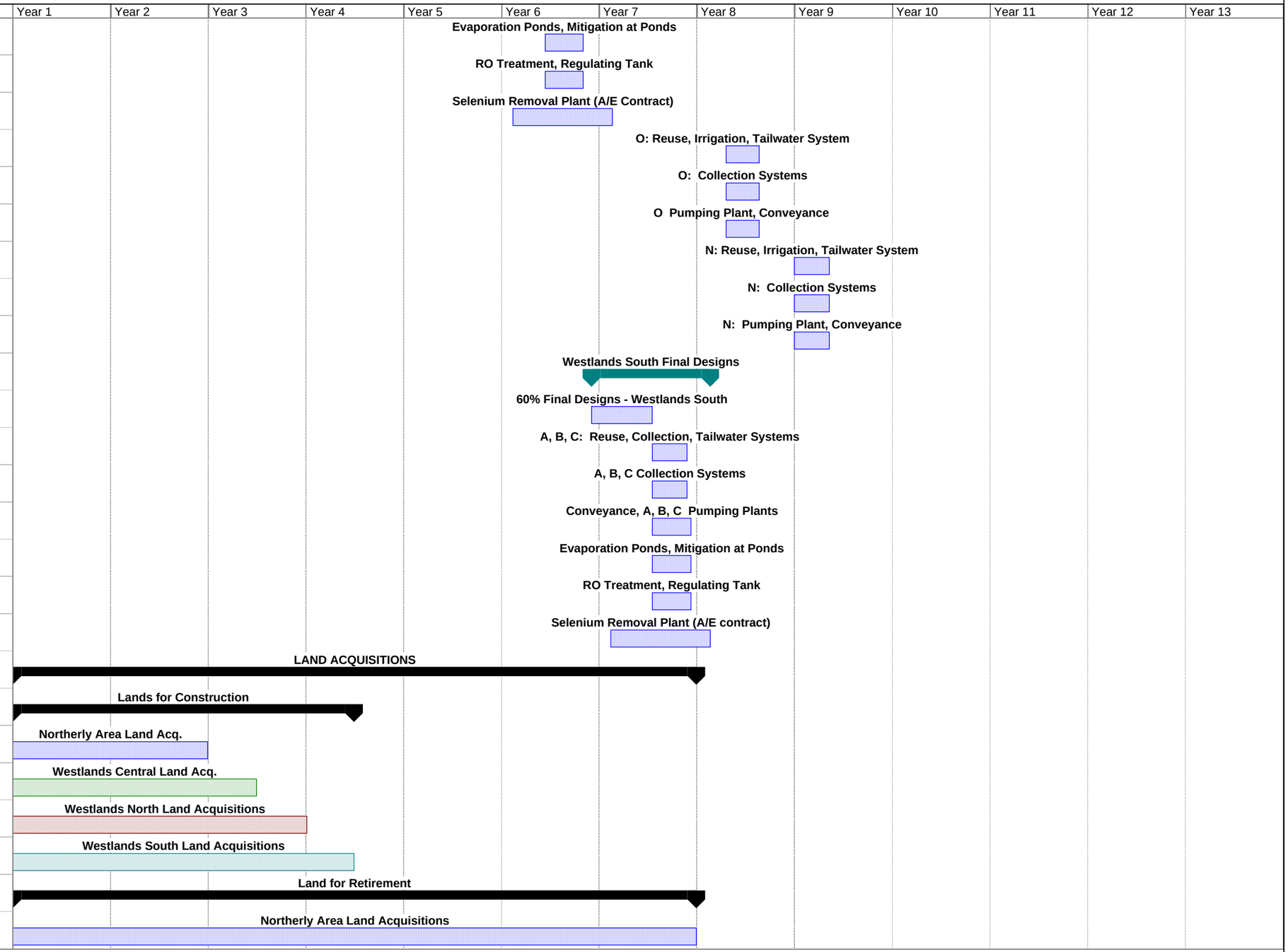

Drainage Feature Re-Evaluation Feasibility Study: Water Needs Alternative - Northerly Area and Westlands Water District

ID	Task Name
76	Westlands Central Land Acquisitions
77	Westlands North Land Acquisitions
78	Westlands South Land Acquisitions
79	**PERMITS: All including hazardous waste and cultural resource surveys, facility permits, etc.**
80	Northerly Area
81	Westlands Central
82	Westlands North
83	Westlands South
84	**PROCUREMENT OF CONSTRUCTION CONTRACTS**
85	**Northerly Area Construction Contracts**
86	Reuse Areas & Collection System
88	Pumping Plants & Conveyance Contracts
89	Reverse Osmosis Treatment Plant & Reg Tanks Contract
90	Design/Build Contract: Selenium Removal Design & Construction
91	Evaporation Ponds & Mitigation at Ponds Contract
92	Mitigation Compensation Off-Site (Phase 1)
93	**Westlands Central Construction Contracts**
94	F, G: Reuse, Collection, Tailwater Systems
96	Conveyance, F & G Pumping Plants
97	Evap Ponds and Ph. 1 Mitigation
98	RO Treatment, Regulating Tank
99	Design/Build Contract: Selenium Removal Design & Construction
100	D, E: Reuse, Collection, Tailwater Systems
102	D, E: Pumps, Conveyance
103	H: Reuse, Collection, Tailwater Systems

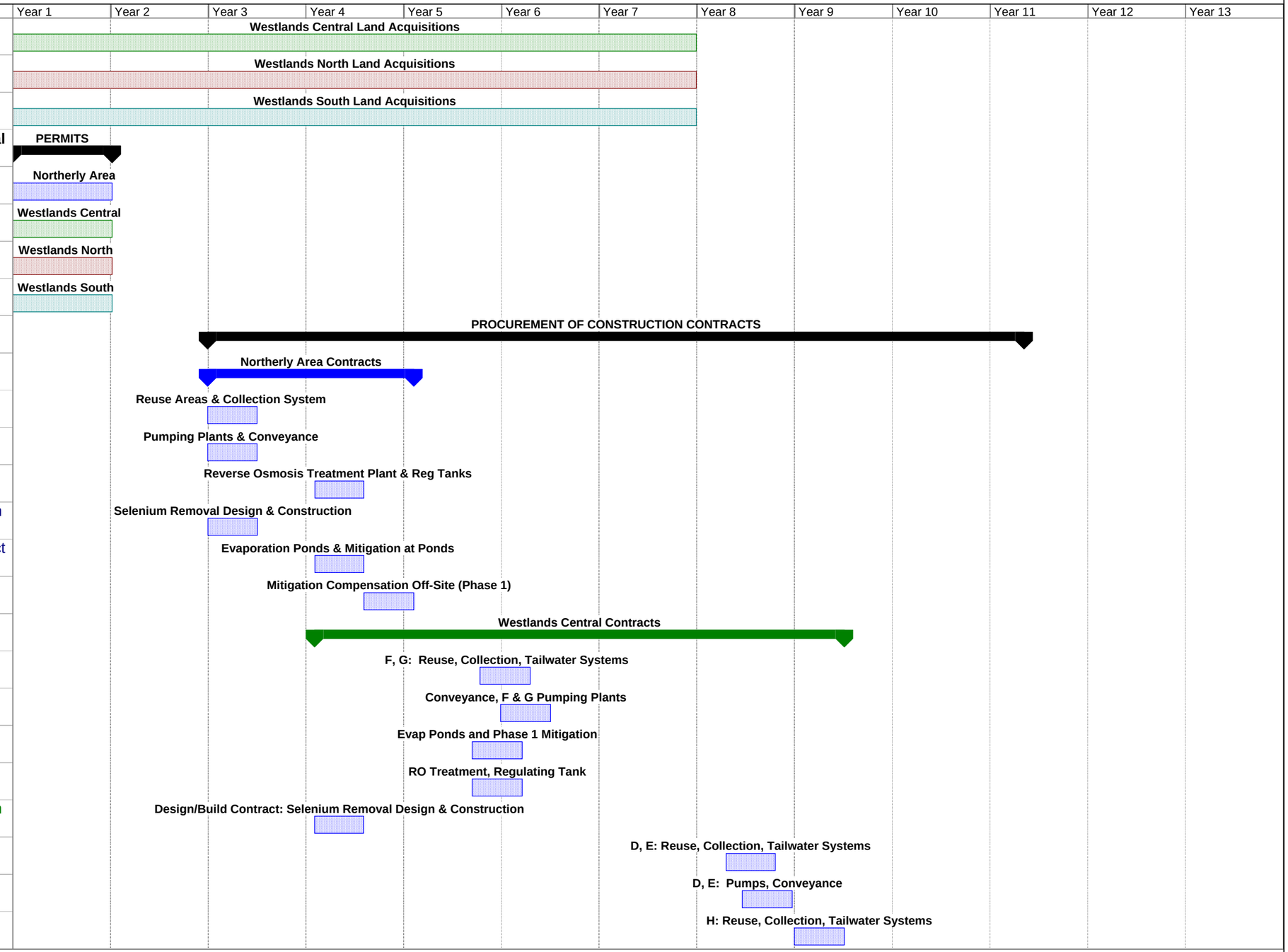

Drainage Feature Re-Evaluation Feasibility Study: Water Needs Alternative - Northerly Area and Westlands Water District

ID	Task Name
105	H: Pumps, Conveyance to Treatment
106	**Westlands North Construction Contracts**
107	M: Reuse, Collection, Tailwater System
109	Conveyance, M Pumping Plant
110	Evaporation Ponds and Phase 1 Mitigation
111	RO Treatment, Regulating Tank
112	Design/Build Contract: Selenium Removal Design & Construction
113	O: Reuse, Collection, Tailwater System
115	O Pumping Plant, Conveyance
116	N: Reuse, Collection, Tailwater System
118	N: Pumping Plant, Conveyance
119	**Westlands South Construction Contracts**
120	A, B, C: Reuse, Collection, Tailwater Systems
122	Conveyance, A, B, C Pumping Plants
123	Evaporation Ponds and Phase 1 Mitigation
124	RO Treatment, Regulating Tank
125	Design/Build Contract: Selenium Removal Design & Construction
126	**Phase 2 Mitigation**
127	Additional Mitigation at All Evap Ponds & Offsite (Phase 2)
128	**CONSTRUCTION**
129	**Northerly Area - Construction**
130	Reuse Areas, Canal-Side Pump Plants, Conv to Reuse, Collection System
132	Pumping Plant Foundations
133	Pumping Plants & Conveyance to Treatment
134	Reverse Osmosis Treatment Plant & Reg Tanks

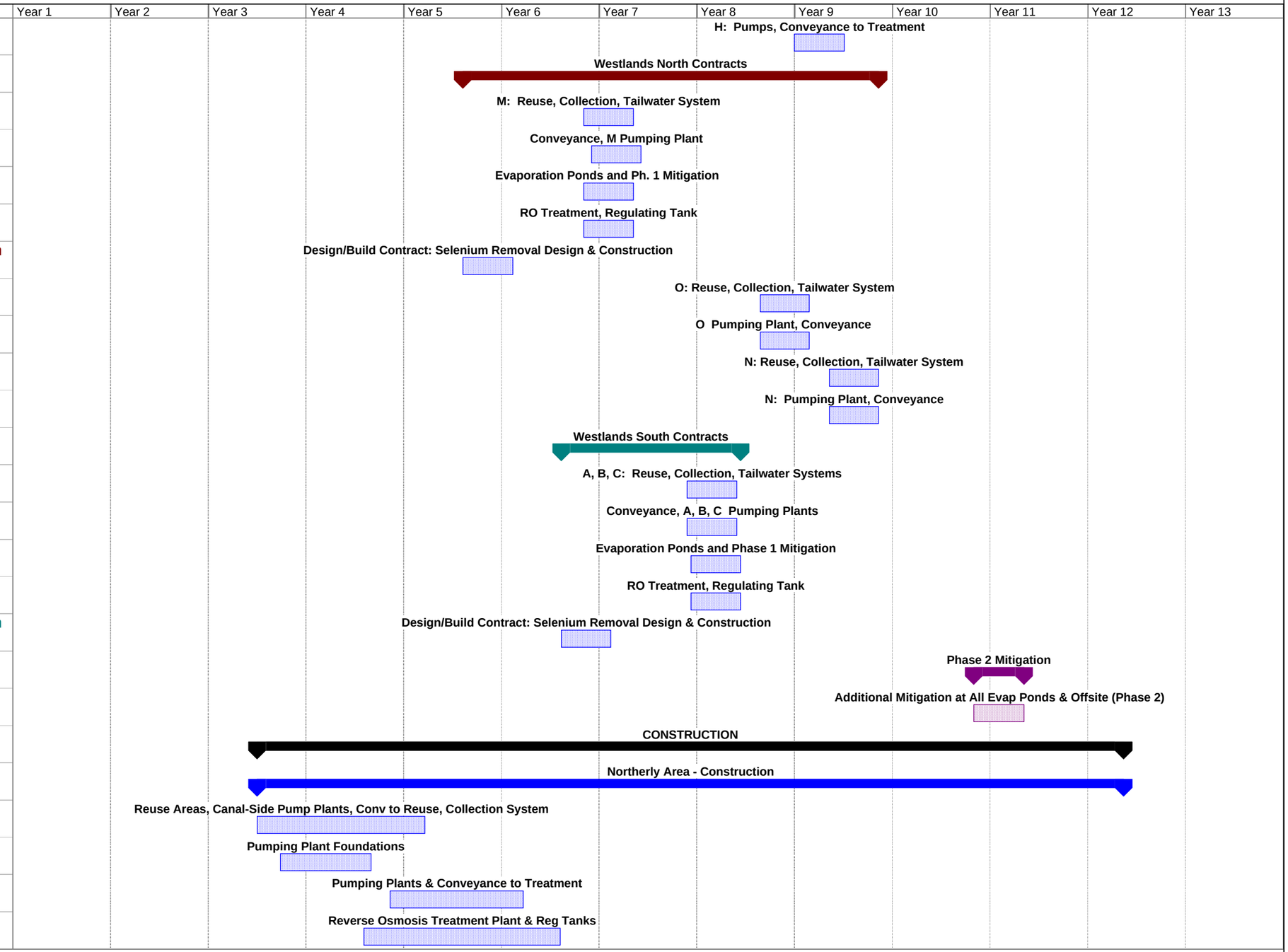

Bureau of Reclamation - Central Valley Project - West San Joaquin Division - San Luis Unit - California

Drainage Feature Re-Evaluation Feasibility Study: Water Needs Alternative - Northerly Area and Westlands Water District

ID	Task Name
135	Selenium Removal Biological Plant
136	Evaporation Ponds & Phase 1 Mitigation
137	Mitigation Compensation Off-Site
138	Transmission Lines & SCADA Systems
139	Northerly Area Complete
140	Northerly Mitigation Phase 2
141	**Westlands Central - Construction**
142	F, G: Reuse, Collection, Tailwater Systems
144	Conveyance, F & G Pumping Plants
145	Evaporation Ponds and Phase 1 Mitigation
146	RO Treatment, Regulating Tank
147	Selenium Removal Plant
148	F & G Systems Complete
149	D, E: Reuse, Collection, Tailwater Systems
151	D, E: Pumps, Conveyance
152	D & E Systems Complete
153	H: Reuse, Collection, Tailwater System
155	H: Pumping Plant, Conveyance
156	H Systems Complete
157	Transmission Lines & SCADA
158	Westlands Central Complete
159	Westlands Central Mitigation Phase 2
160	**Westlands North - Construction**
161	M: Reuse, Collection, Tailwater System
163	Conveyance, M Pumping Plant

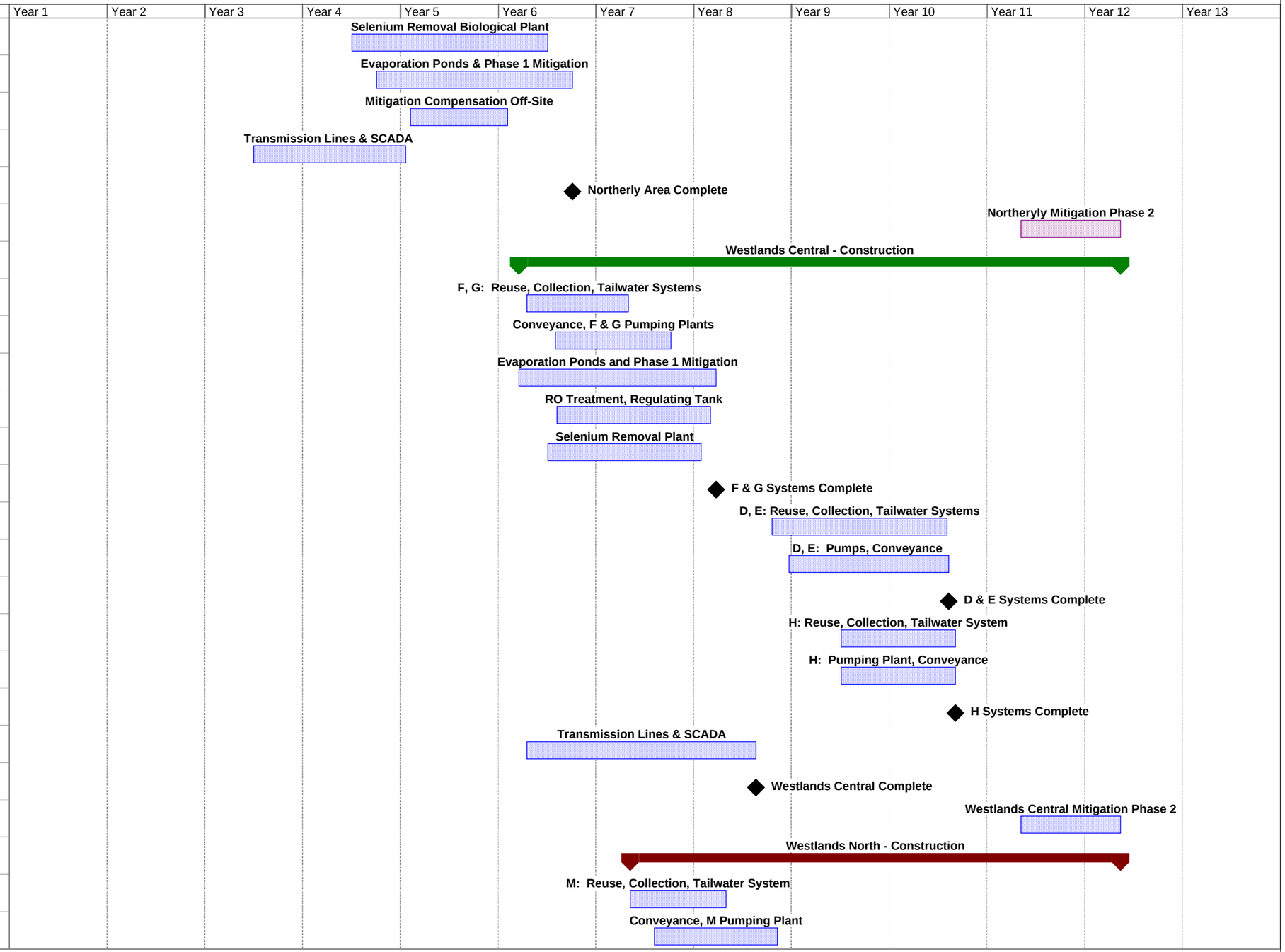

Drainage Feature Re-Evaluation Feasibility Study: Water Needs Alternative - Northerly Area and Westlands Water District
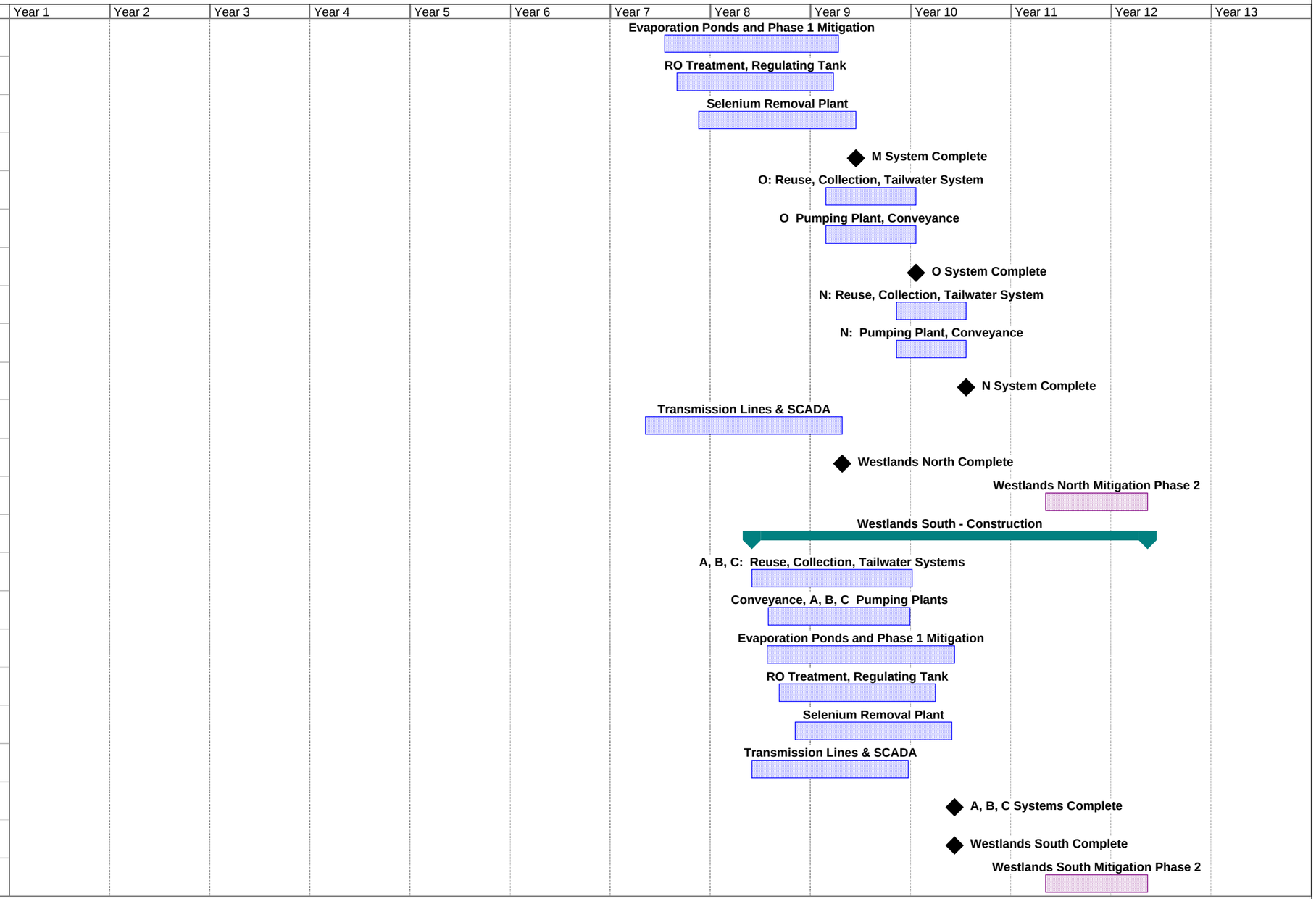
ID	Task Name
164	Evaporation Ponds and Phase 1 Mitigation
165	RO Treatment, Regulating Tank
166	Selenium Removal Plant
167	M System Complete
168	O: Reuse, Collection, Tailwater System
170	O Pumping Plant, Conveyance
171	O System Complete
172	N: Reuse, Collection, Tailwater System
174	N: Pumping Plant, Conveyance
175	N System Complete
176	Transmission Lines & SCADA
177	Westlands North Complete
178	Westlands North Mitigation Phase 2
179	**Westlands South - Construction**
180	A, B, C: Reuse, Collection, Tailwater Systems
182	Conveyance, A, B, C Pumping Plants
183	Evaporation Ponds and Phase 1 Mitigation
184	RO Treatment, Regulating Tank
185	Selenium Removal Plant
186	Transmission Lines & SCADA
187	A, B, C Systems Complete
188	Westlands South Complete
189	Westlands South Mitigation Phase 2