FINAL ENVIRONMENTAL ASSESSMENT

SOUTH INTERCONNECTION BETWEEN NORTH KERN WATER STORAGE DISTRICT AND SHAFTER-WASCO IRRIGATION DISTRICT

Appendix C
Biological Survey Protocols: San Joaquin kit fox and Burrowing Owls

December 2010

U.S. FISH AND WILDLIFE SERVICE
STANDARDIZED RECOMMENDATIONS
FOR PROTECTION OF THE SAN JOAQUIN KIT FOX
PRIOR TO OR DURING GROUND DISTURBANCE

Prepared by the Sacramento Fish and Wildlife Office
June 1999

INTRODUCTION

The following document includes many of the San Joaquin kit fox (*Vulpes macrotis mutica*) protection measures typically recommended by the U. S. Fish and Wildlife Service (Service), prior to and during ground disturbance activities. However, incorporating relevant sections of these guidelines into the proposed project is not the only action required under the Endangered Species Act of 1973, as amended (Act). Project applicants should contact the Service in Sacramento to determine the full range of requirements that apply to your project; the address and telephone number are given at the end of this document. Formal authorization for the project may be required under either section 7 or section 10 of the Act. Implementation of the measures presented in this document may be necessary to avoid violating the provisions of the Act, including the prohibition against "take" (defined as killing, harming, or harassing a listed species, including actions that damage or destroy its habitat). Such protection measures may also be required under the terms of a biological opinion pursuant to section 7 of the Act resulting in incidental take authorization (authorization), or an incidental take permit (permit) pursuant to section 10 of the Act. The specific measures implemented to protect kit fox for any given project shall be determined by the Service based upon the applicant's consultation with the Service.

The purpose of this document is to make information on kit fox protection strategies readily available and to help standardize the methods and definitions currently employed to achieve kit fox protection. The measures outlined in this document are subject to modification or revision at the discretion of the Service.

All surveys, den destructions, and monitoring described in this document must be conducted by a qualified biologist. A qualified biologist (biologist) means any person who has completed at least four years of university training in wildlife biology or a related science and/or has demonstrated field experience in the identification and life history of the San Joaquin kit fox. In addition, biologist(s) must be able to identify coyote, red fox, gray fox, and kit fox tracks, and to have seen a kit fox in the wild, at a zoo, or as a museum mount.

SMALL PROJECTS

Small projects are considered to be those projects with small foot prints such as an individual in-fill oil well, communication tower, or bridge repair. These projects must stand alone and not be part of, or in any way connected to larger projects (i.e., bridge repair or improvement to serve a

future urban development). The Service recommends that on these small projects, the biologist survey the proposed project boundary and a 200-foot area outside of the project footprint to identify habitat features, and make recommendations on situating the project to minimize or avoid impacts. If habitat features cannot be completely avoided, then preconstruction surveys should be conducted.

Preconstruction/preactivity surveys shall be conducted no less than 14 days and no more than 30 days prior to the beginning of ground disturbance and/or construction activities or any project activity likely to impact the San Joaquin kit fox. Surveys should identify kit fox habitat features on the project site and evaluate use by kit fox and, if possible, and assess the potential impacts to the kit fox by the proposed activity. The status of all dens should be determined and mapped (see Survey Protocol).

Written results of preconstruction/preactivity surveys must be received by the Service within five days after survey completion and prior to the start of ground disturbance and/or construction activities. If a natal/pupping den is discovered within the project area or within 200-feet of the project boundary, the Service shall be immediately notified. If the preconstruction/preactivity survey reveals an active natal pupping or new information, the project applicant should contact the Service immediately to obtain the necessary take authorization/permit.

If take authorization/permit has already been issued, then the biologist may proceed with den destruction within the project boundary, except natal/pupping dens (active or inactive). Protective exclusion zones can be placed around all known and potential dens which occur outside the project footprint (conversely, the project boundary can be demarcated, see den destruction section).

OTHER PROJECTS

It is likely that all other projects occurring within kit fox habitat will require a take authorization/permit from the Service. This determination would be made by the Service during the early evaluation process (see Survey Protocol). These other projects would include, but are not limited to: linear projects; projects with large footprints such as urban development; and projects which in themselves may be small but have far reaching impacts (i.e., water storage or conveyance facilities that promote urban growth or agriculture, etc.).

The take authorization/permit issued by the Service may incorporate some or all of the protection measures presented in this document. The take authorization/permit may include measures specific to the needs of the project, and those requirements supersede any requirements found in this document.

EXCLUSION ZONES

The configuration of exclusion zones around the kit fox dens should have a radius measured outward from the entrance or cluster of entrances. The following radii are minimums, and if they cannot be followed the Service must be contacted:

Potential den	50 feet
Known den	100 feet
Natal/pupping den (occupied and unoccupied)	Service must be contacted
Atypical den	50 feet

Known den: To ensure protection, the exclusion zone should be demarcated by fencing that encircles each den at the appropriate distance and does not prevent access to the den by kit foxes. Exclusion zone fencing should be maintained until all construction related or operational disturbances have been terminated. At that time, all fencing shall be removed to avoid attracting subsequent attention to the dens.

Potential and Atypical dens: Placement of 4-5 flagged stakes 50 feet from the den entrance(s) will suffice to identify the den location; fencing will not be required, but the exclusion zone must be observed.

Construction and other project activities should be prohibited or greatly restricted within these exclusion zones. Only essential vehicle operation on existing roads and foot traffic should be permitted. Otherwise, all construction, vehicle operation, material storage, or any other type of surface-disturbing activity should be prohibited within the exclusion zones.

DESTRUCTION OF DENS

Disturbance to all San Joaquin kit fox dens should be avoided to the maximum extent possible. Protection provided by kit fox dens for use as shelter, escape, cover, and reproduction is vital to the survival of the species. Limited destruction of kit fox dens may be allowed, if avoidance is not a reasonable alternative, provided the following procedures are observed. The value to kit foxes of potential, known, and natal/pupping dens differ and therefore, each den type needs a different level of protection. **Destruction of any known or natal/pupping kit fox den requires take authorization/permit from the Service**.

Natal/pupping dens: Natal or pupping dens which are occupied will not be destroyed until the pups and adults have vacated and then only after consultation with the Service. Therefore, project activities at some den sites may have to be postponed.

Known Dens: Known dens occurring within the footprint of the activity must be monitored for three days with tracking medium or an infra-red beam camera to determine the current use. If no kit fox activity is observed during this period, the den should be destroyed immediately to preclude subsequent use. If kit fox activity is observed at the den during this period, the den should be monitored for at least five consecutive days from the time of the observation to allow any resident animal to move to another den during its normal activity. Use of the den can be discouraged during this period by partially plugging its entrances(s) with soil in such a manner that any resident animal can escape easily. Only when the den is determined to be unoccupied may the den be excavated under the direction of the biologist. If the animal is still present after five or more consecutive days of plugging and monitoring, the den may have to be excavated when, in the judgment of a biologist, it is temporarily vacant, for example during the animal's normal foraging activities. The Service encourages hand excavation, but realizes that soil conditions may necessitate the use of excavating equipment. However, extreme caution must be exercised.

Destruction of the den should be accomplished by careful excavation until it is certain that no kit foxes are inside. The den should be fully excavated, filled with dirt and compacted to ensure that kit foxes cannot reenter or use the den during the construction period. If at any point during excavation a kit fox is discovered inside the den, the excavation activity shall cease immediately and monitoring of the den as described above should be resumed. Destruction of the den may be completed when in the judgement of the biologist, the animal has escaped from the partially destroyed den.

Potential Dens: If a take authorization/permit has been obtained from the Service, den destruction may proceed without monitoring, unless other restrictions were issued with the take authorization/permit. If no take authorization/permit has been issued, then potential dens should be monitored as if they were known dens. If any den was considered to be a potential den, but is later determined during monitoring or destruction to be currently, or previously used by kit fox (e.g., if kit fox sign is found inside), then destruction shall cease and the Service shall be notified immediately.

CONSTRUCTION AND OPERATIONAL REQUIREMENTS

Habitat subject to permanent and temporary construction disturbances and other types of project-related disturbance should be minimized. Project designs should limit or cluster permanent project features to the smallest area possible while still permitting project goals to be achieved. To minimize temporary disturbances, all project-related vehicle traffic should be restricted to established roads, construction areas, and other designated areas. These areas should also be

included in preconstruction surveys and, to the extent possible, should be established in locations disturbed by previous activities to prevent further impacts.

1. Project-related vehicles should observe a 20-mph speed limit in all project areas, except on county roads and State and Federal highways; this is particularly important at night when kit foxes are most active. To the extent possible, night-time construction should be minimized. Off-road traffic outside of designated project areas should be prohibited.

2. To prevent inadvertent entrapment of kit foxes or other animals during the construction phase of a project, all excavated, steep-walled holes or trenches more than 2 feet deep should be covered at the close of each working day by plywood or similar materials, or provided with one or more escape ramps constructed of earth fill or wooden planks. Before such holes or trenches are filled, they should be thoroughly inspected for trapped animals. If at any time a trapped or injured kit fox is discovered, the procedures under number 13 of this section must be followed.

3. Kit foxes are attracted to den-like structures such as pipes and may enter stored pipe becoming trapped or injured. All construction pipes, culverts, or similar structures with a diameter of 4-inches or greater that are stored at a construction site for one or more overnight periods should be thoroughly inspected for kit foxes before the pipe is subsequently buried, capped, or otherwise used or moved in any way. If a kit fox is discovered inside a pipe, that section of pipe should not be moved until the Service has been consulted. If necessary, and under the direct supervision of the biologist, the pipe may be moved once to remove it from the path of construction activity, until the fox has escaped.

4. All food-related trash items such as wrappers, cans, bottles, and food scraps should be disposed of in closed containers and removed at least once a week from a construction or project site.

5. No firearms shall be allowed on the project site.

6. To prevent harassment, mortality of kit foxes or destruction of dens by dogs or cats, no pets should be permitted on project sites.

7. Use of rodenticides and herbicides in project areas should be restricted. This is necessary to prevent primary or secondary poisoning of kit foxes and the depletion of prey populations on which they depend. All uses of such compounds should observe label and other restrictions mandated by the U.S. Environmental Protection Agency, California Department of Food and Agriculture, and other State and Federal legislation, as well as additional project-related restrictions deemed necessary by the Service. If rodent control

must be conducted, zinc phosphide should be used because of proven lower risk to kit fox.

8. A representative shall be appointed by the project proponent who will be the contact source for any employee or contractor who might inadvertently kill or injure a kit fox or who finds a dead, injured or entrapped individual. The representative will be identified during the employee education program. The representative's name and telephone number shall be provided to the Service.

9. An employee education program should be conducted for any project that has expected impacts to kit fox or other endangered species. The program should consist of a brief presentation by persons knowledgeable in kit fox biology and legislative protection to explain endangered species concerns to contractors, their employees, and military and agency personnel involved in the project. The program should include the following: a description of the San Joaquin kit fox and its habitat needs; a report of the occurrence of kit fox in the project area; an explanation of the status of the species and its protection under the Endangered Species Act; and a list of measures being taken to reduce impacts to the species during project construction and implementation. A fact sheet conveying this information should be prepared for distribution to the above-mentioned people and anyone else who may enter the project site.

10. Upon completion of the project, all areas subject to temporary ground disturbances, including storage and staging areas, temporary roads, pipeline corridors, etc. should be re-contoured if necessary, and revegetated to promote restoration of the area to pre-project conditions. An area subject to "temporary" disturbance means any area that is disturbed during the project, but that after project completion will not be subject to further disturbance and has the potential to be revegetated. Appropriate methods and plant species used to revegetate such areas should be determined on a site-specific basis in consultation with the Service, California Department of Fish and Game (CDFG), and revegetation experts.

11. In the case of trapped animals, escape ramps or structures should be installed immediately to allow the animal(s) to escape, or the Service should be contacted for advice.

12. Any contractor, employee, or military or agency personnel who inadvertently kills or injures a San Joaquin kit fox shall immediately report the incident to their representative. This representative shall contact the CDFG immediately in the case of a dead, injured or entrapped kit fox. The CDFG contact for immediate assistance is State Dispatch at (916) 445-0045. They will contact the local warden or biologist.

13. The Sacramento Fish and Wildlife Office and CDFG will be notified in writing within three working days of the accidental death or injury to a San Joaquin kit fox during

project related activities. Notification must include the date, time, and location of the incident or of the finding of a dead or injured animal and any other pertinent information. The Service contact is the Chief of the Division of Endangered Species, at the addresses and telephone numbers given below. The CDFG contact is Mr. Ron Schlorff at 1416 9th Street, Sacramento, California 95814, (916) 654-4262.

Any project-related information required by the Service or questions concerning the above conditions or their implementation may be directed in writing to the U.S. Fish and Wildlife Service at:

Endangered Species Division
2800 Cottage Way, Suite W2605
Sacramento, California 95825-1846
(916) 414-6620

"Take" - Section 9 of the Endangered Species Act of 1973, as amended (Act) prohibits the "take" of any federally listed endangered species by any person (an individual, corporation, partnership, trust, association, etc.) subject to the jurisdiction of the United States. As defined in the Act, take means " . . . to harass, harm, pursue, hunt, shoot, wound, kill, trap, capture, or collect, or attempt to engage in any such conduct." Thus, not only is a listed animal protected from activities such as hunting, but also from actions that damage or destroy its habitat.

"Dens" - San Joaquin kit fox dens may be located in areas of low, moderate, or steep topography. Den characteristics are listed below, however, the specific characteristics of individual dens may vary and occupied dens may lack some or all of these features. Therefore, caution must be exercised in determining the status of any den. Typical dens may include the following: (1) one or more entrances that are approximately 5 to 8 inches in diameter; (2) dirt berms adjacent to the entrances; (3) kit fox tracks, scat, or prey remains in the vicinity of the den; (4) matted vegetation adjacent to the den entrances; and (5) manmade features such as culverts, pipes, and canal banks.

"Known den" - Any existing natural den or manmade structure that is used or has been used at any time in the past by a San Joaquin kit fox. Evidence of use may include historical records, past or current radiotelemetry or spotlighting data, kit fox sign such as tracks, scat, and/or prey remains, or other reasonable proof that a given den is being or has been used by a kit fox. The Service discourages use of the terms ”active” and “inactive” when referring to any kit fox den because a great percentage of occupied dens show no evidence of use, and because kit foxes change dens often, with the result that the status of a given den may change frequently and abruptly.

"Potential Den" - Any subterranean hole within the species’ range that has entrances of appropriate dimensions for which available evidence is insufficient to conclude that it is being used or has been used by a kit fox. Potential dens shall include the following: (1) any suitable subterranean hole; or (2) any den or burrow of another species (e.g., coyote, badger, red fox, or ground squirrel) that otherwise has appropriate characteristics for kit fox use.

"Natal or Pupping Den" - Any den used by kit foxes to whelp and/or rear their pups. Natal/pupping dens may be larger with more numerous entrances than dens occupied exclusively by adults. These dens typically have more kit fox tracks, scat, and prey remains in the vicinity of the den, and may have a broader apron of matted dirt and/or vegetation at one or more entrances. A natal den, defined as a den in which kit fox pups are actually whelped but not necessarily reared, is a more restrictive version of the pupping den. In practice, however, it is difficult to distinguish between the two, therefore, for purposes of this definition either term applies.

"Atypical Den" - Any manmade structure which has been or is being occupied by a San Joaquin kit fox. Atypical dens may include pipes, culverts, and diggings beneath concrete slabs and buildings.

State of California

Memorandum

: "Div. Chiefs - IFD, BDD, NED, & WMD
Reg. Mgrs. - Regions 1, 2, 3, 4, & 5

Date : October 17, 1995

From : Department of Fish and Game

Subject :
Staff Report on Burrowing Owl Mitigation

I am hereby transmitting the Staff Report on Burrowing Owl Mitigation for your use in reviewing projects (California Environmental Quality Act [CEQA] and others) which may affect burrowing owl habitat. The Staff Report has been developed during the last several months by the Environmental Services Division (ESD) in cooperation with the Wildlife Management Division (WMD) and regions 1, 2, and 4. It has been sent out for public review and redrafted as appropriate.

Either the mitigation measures in the staff report may be used or project specific measures may be developed. Alterative project specific measures proposed by the Department divisions/regions or by project sponsors will also be considered. However, such mitigation measures must be submitted to ESD for review. The review process will focus on the consistency of the proposed measure with Department, Fish and Game Commission, and legislative policy and with laws regarding raptor species. ESD wiIl coordinate project specific mitigation measure review with WMD.

If you have any questions regarding the report, please contact Mr. Ron Rempel, Supervising Biologist, Environmental Services Division, telephone (916) 654-9980.

COPY Original signed by C.F. Raysbrook

C. F. Raysbrook
Interim Director

Attachment

cc: Mr. Ron Rempel
Department of Fish and Game
Sacramento

STAFF REPORT ON BURROWING OWL MITIGATION

Introduction

The Legislature and the Fish and Game Commission have developed the policies, standards and regulatory mandates to protect native species of fish and wildlife. In order to determine how the Department of Fish and Game (Department) could judge the adequacy of mitigation measures designed to offset impacts to burrowing owls *(Speotyto cunicularia;* A.O.U. 1991) staff (WMD, ESD, and Regions) has prepared this report. To ensure compliance with legislative and commission policy, mitigation requirements which are consistent with this report should be incorporated into: (1) Department comments to Lead Agencies and project sponsors pursuant to the California Environmental Quality Act (CEQA); and (2) other authorizations the Department gives to project proponents for projects impacting burrowing owls.

This report is designed to provide the Department (including regional offices and divisions), CEQA Lead Agencies and project proponents the context in which the Environmental Services Division (ESD) will review proposed project specific mitigation measures. This report also includes preapproved mitigation measures which have been judged to be consistent with policies, standards and legal mandates of the Legislature,. the Fish and Game Commission and the Department's public trust responsibilities. Implementation of mitigation measures consistent with this report are intended to help achieve the conservation of burrowing owls and should compliment multi-species habitat conservation planning efforts currently underway. The *Burrowing Owl Survey Protocol and Mitigation Guidelines* developed by The California Burrowing Owl Consortium (CBOC 1993) were taken into consideration in the preparation of this staff report as were comments from other interested parties.

A range-wide conservation strategy for this species is needed. Any range-wide conservation strategy should establish criteria for avoiding the need to list the species pursuant to either the California or federal Endangered Species Acts through preservation of existing habitat, population expansion into former habitat, recruitment of young into the population, and other specific efforts.

California's burrowing owl population is clearly declining and, if declines continue, the species may qualify for listing. Because of the intense pressure for urban development within suitable burrowing owl nesting and foraging habitat (open, flat and gently rolling grasslands and grass/shrub lands) in California, conflicts between owls and development projects often occur. Owl survival can be adversely affected by disturbance and foraging habitat loss even when impacts to individual birds and nests/burrows are avoided. Adequate information about the presence of owls is often unavailable prior to project approval. Following project approval there is no legal mechanism through which to seek mitigation other than avoidance of occupied burrows or nests. The absence of standardized survey methods often impedes consistent impact assessment.

Burrowing Owl Habitat Description

Burrowing owl habitat can be found in annual and perennial grasslands, deserts, and arid scrublands characterized by low-growing vegetation (Zarn 1974). Suitable owl habitat may also include trees and shrubs if the canopy covers less than 30 percent of the ground surface. Burrows are the essential component of burrowing owl habitat. Both natural and artificial burrows provide protection, shelter, and nests for burrowing owls (Henny and Blus 1981). Burrowing owls typically use burrows made by fossorial mammals, such as ground squirrels or badgers, but also may use man-made structures such as cement culverts; cement, asphalt, or wood debris piles; or openings beneath cement or asphalt pavement.

Occupied Burrowing Owl Habitat

Burrowing owls may use a site for breeding, wintering, foraging, and/or migration stopovers. Occupancy of suitable burrowing owl habitat can be verified at a site by detecting a burrowing owl, its molted feathers, cast pellets, prey remains, eggshell fragments, or excrement at or near a burrow entrance. Burrowing owls exhibit high site fidelity, reusing burrows year after year (Rich 1984, Feeney 1992). A site should be assumed occupied if at least one burrowing owl has been observed occupying a burrow there within the last three years (Rich 1984).

CEQA Project Review

The measures included in this report are intended to provide a decision-making process that should be implemented whenever-there is potential for-an action or project to adversely affect burrowing owls. For projects subject to the California Environmental Quality Act (CEQA), the process begins by conducting surveys to determine if burrowing owls are foraging or nesting on or adjacent to the project site. If surveys confirm that the site is occupied habitat, mitigation measures to minimize impacts to burrowing owls, their burrows and foraging habitat should be incorporated into the CEQA document as enforceable conditions. The measures in this document are intended to conserve the species by protecting and maintaining viable' populations of the species throughout their range in California. This may often result in protecting and managing habitat for the species at sites away from rapidly urbanizing/developing areas. Projects and situations vary and mitigation measures should be adapted to fit specific circumstances.

Projects not subject to CEQA review may have to be handled separately since the legal authority the Department has with respect to burrowing owls in this type of situation is often limited. The burrowing owl is protected from "take" (Section 3503.5 of the Fish and Game Code) but unoccupied habitat is likely to be lost for activities not subject to CEQA.

Legal Status

The burrowing owl is a migratory species protected by international treaty under the Migratory Bird Treaty Act (MBTA) of 1918 (16 U.S.C. 703-711). The MBTA makes it unlawful to take, possess, buy, sell, purchase, or barter any migratory bird listed in 50 C.F.R. Part 10, including feathers or other parts, nests, eggs, or products, except as allowed by implementing regulations (50 C.F.R. 21). Sections 3505, 3503.5, and 3800 of the California Department of Fish and Game Code prohibit the take, possession, or destruction of birds, their nests or eggs. To avoid violation of the take provisions of these laws generally requires that project-related disturbance at active nesting territories be reduced or eliminated during the nesting cycle (February 1 to August 31). Disturbance that causes nest abandonment and/or loss of reproductive effort (e.g., killing or abandonment of eggs or young) may be considered "take"' and is potentially punishable by fines and/or imprisonment.

The burrowing owl is a Species of Special Concern to California because of declines of suitable habitat and both localized and statewide population declines. Guidelines for the Implementation of the California Environmental Quality Act (CEQA) provide that a species be considered as endangered or "rare" regardless of appearance on a formal list for the purposes of the CEQA (Guidelines, Section 15380, subsections b and d). The CEQA requires a mandatory findings of significance if impacts to threatened or endangered species are likely to occur (Sections 21001 (c), 2103; Guidelines 15380, 15064, 15065). To be legally adequate, mitigation measures must be capable of "avoiding the impact altogether by not taking a certain action or parts of an action"; "minimizing impacts by limiting the degree or magnitude of the action and its implementation"; "rectifying the impact by repairing, rehabilitating or restoring the impacted environment"; "or reducing or eliminating the impact over time by preservation and maintenance operations during the life of the action" (Guidelines, Section 15370). Avoidance or mitigation to reduce impacts to less than significant levels must be included in a project or the CEQA lead agency must make and justify findings of overriding considerations.

Impact Assessment

Habitat Assessment

The project site and a 150 meter (approximately 500 ft.) buffer (where possible and appropriate based on habitat) should be surveyed to assess the presence of burrowing owls and their habitat (Thomsen 1971, Martin 1973). If occupied habitat is detected on or adjacent to the site, measures to avoid, minimize, or mitigate the project's impacts to the species should be incorporated into the project, including burrow preconstruction surveys to ensure avoidance of direct take. It is also recommended that preconstruction surveys be conducted if the species was not detected but is likely to occur on the project site.

Burrowing Owl and Burrow Surveys

Burrowing owl and burrow surveys should be conducted during both the wintering and nesting seasons, unless the species is detected on the first survey. If possible, the winter survey should be conducted between December 1 and January 31 (when wintering owls are most likely to be present) and the nesting season survey should be conducted between April 15 and July 15 (the peak of the breeding season). Surveys conducted from two hours before sunset to one hour after, or from one hour before to two hours after sunrise, are also preferable.

Surveys should be conducted by walking suitable habitat on the entire project site and (where possible) in areas within 150 meters (approx. 500 ft.) of the project impact zone. The 150-meter buffer zone is surveyed to identify burrows and owls outside of the project area which may be impacted by factors -such as noise and vibration (heavy equipment, etc.) during project construction. Pedestrian survey transects should be spaced to allow 100 percent visual coverage of the ground surface. The distance between transect center lines should be no more than 30 meters (approx. 100 ft.) and should be reduced to account for differences in terrain, vegetation density, and ground surface visibility. To effectively survey large projects (100 acres or larger), two or more surveyors should be used to walk adjacent transects. To avoid impacts to owls from surveyors, owls and/or occupied burrows should be avoided by a minimum of 50 meters (approx. 160 ft.) wherever practical. Disturbance to occupied burrows should be avoided during all seasons.

Definition of Impacts

The following should be considered impacts to the species:

- Disturbance within 50 meters (approx. 160 ft.) Which may result in harassment of owls at occupied burrows;
- Destruction of natural and artificial burrows (culverts, concrete slabs and debris piles that provide shelter to burrowing owls); and
- Destruction and/or degradation of foraging habitat adjacent (within 100 m) of an occupied burrow(s).

Written Report

A report for the project should be prepared for the Department and copies should be submitted to the Regional contact and to the Wildlife Management Division Bird and Mammal Conservation Program. The report should include the following information:

- Date and time of visit(s) including name of the qualified biologist conducting surveys, weather and visibility conditions, and survey methodology;

- Description of the site including location, size, topography, vegetation communities, and animals observed during visit(s);

- Assessment of habitat suitability for burrowing owls;

- Map and photographs of the site;

- Results of transect surveys including a map showing the location of all burrow(s) (natural or artificial) and owl(s), including the numbers at each burrow if present and tracks, feathers, pellets, or other items (prey remains, animal scat);

- Behavior of owls during the surveys;

- Summary of both winter and nesting season surveys including any productivity information and a map showing territorial boundaries and home ranges; and

- Any historical information (Natural Diversity Database, Department regional files? Breeding Bird Survey data, American Birds records, Audubon Society, local bird club, other biologists, etc.) regarding the presence of burrowing owls on the site.

Mitigation

The objective of these measures is to avoid and minimize impacts to burrowing owls at a project site and preserve habitat that will support viable owls populations. If burrowing owls are detected using the project area, mitigation measures to minimize and offset the potential impacts should be included as enforceable measures during the CEQA process.

Mitigation actions should be carried out from September 1 to January 31 which is prior to the nesting season (Thomsen 1971, Zam 1974). Since the timing of nesting activity may vary with latitude and climatic conditions, this time frame should be adjusted accordingly. Preconstruction surveys of suitable habitat at the project site(s) and buffer zone(s) should be conducted within the 30 days prior to construction to ensure no additional, burrowing owls have established territories since the initial surveys. If ground disturbing activities are delayed or suspended for more than 30 days after the preconstruction survey, the site should be resurveyed.

Although the mitigation measures may be included as enforceable project conditions in the CEQA process, it may also be desirable to formalize them in a Memorandum of Understanding (MOU) between the Department and the project sponsor. An MOU is needed when lands (fee title or conservation easement) are being transferred to the Department.

Specific Mitigation Measures

1. Occupied burrows should not be disturbed during the nesting season (February 1 through August 3 1) unless a qualified biologist approved by the Department verifies through non-invasive methods that either: (1) the birds have not begun egg-laying and incubation; or (2) that juveniles from the occupied burrows are foraging independently and are capable of independent survival.

2. To offset the loss of foraging and burrow habitat on the project site, a minimum of 6.5 acres of foraging habitat (calculated on a 100 m {approx. 300 ft.} foraging radius around the burrow) per pair or unpaired resident bird, should be acquired and permanently protected. The protected lands should be adjacent to occupied burrowing owl habitat and at a location acceptable to the Department. *Protection of additional habitat acreage per pair or unpaired resident bird may be applicable in some instances.* The CBOC has also developed mitigation guidelines (CBOC 1993) that can be incorporated by CEQA lead agencies and which are consistent with this staff report.

3. When destruction of occupied burrows is unavoidable, existing unsuitable burrows should be enhanced (enlarged or cleared of debris) or new burrows created (by installing artificial burrows) at a ratio of 2:1 on the protected lands site. One example of an artificial burrow design is provided in Attachment A.

4. If owls must be moved away from the disturbance area, passive relocation techniques (as described below) should be used rather than trapping. At least one or more weeks will be necessary to accomplish this and allow the owls to acclimate to alternate burrows.

5. The project sponsor should provide funding for long-term management and monitoring of the protected lands. The monitoring plan should include success criteria, remedial measures, and an annual report to the Department.

Impact Avoidance

If avoidance is the preferred method of dealing with potential project impacts, then no disturbance should occur within 50 meters (approx. 160 ft.) of occupied burrows during the nonbreeding season of September 1 through January 31 or within 75 meters (approx. 250 ft.) during the breeding season of February 1 through August 31. Avoidance also requires that a minimum of 6.5 acres of foraging habitat be *permanently* preserved contiguous with occupied burrow sites for each pair of breeding burrowing owls (with or without dependent young) or single unpaired resident bird. The configuration of the protected habitat should be approved by the Department.

Passive Relocation - With One-Way Doors

Owls should be excluded from burrows in the immediate impact zone and within a 50 meter (approx. 160 ft.) buffer zone by installing one-way doors in burrow entrances. One-way doors (e.g., modified dryer vents) should be left in place 48 hours to insure owls have left the burrow before excavation. Two natural or artificial burrows should be provided for each burrow in the project area that will be rendered biologically unsuitable. The project area should be *monitored daily for one* week to confirm owl use of burrows before excavating burrows in the immediate impact zone. Whenever possible, burrows should be excavated using hand tools and refilled to prevent reoccupation. Sections of flexible plastic pipe should be inserted into the tunnels during excavation to maintain an escape route for any animals inside the burrow.

Passive Relocation - Without One-Way Doors

Two natural or artificial burrows should be provided for each burrow in the project area that will be rendered biologically unsuitable. The project area should be *monitored daily until the owls have relocated to the new burrows.* The formerly occupied burrows may then. be excavated. Whenever possible, burrows should be excavated using hand tools and refilled to prevent reoccupation. Sections of flexible plastic pipe should be inserted into burrows during excavation to maintain an escape route for any animals inside the burrow.

Projects Not Subject to CEQA

The Department is often contacted regarding the presence of burrowing owls on construction sites, parking lots and other areas for which there is no CEQA action or for which the CEQA process has been completed. In these situations, the Department should seek to reach agreement with the project sponsor to implement the specific mitigation measures described above. If they are unwilling to do so, passive relocation without the aid of one-way doors is their only option based upon Fish and Game Code 3503.5.

Literature Cited

American Ornithologists Union (AOU). 1991. Thirty-eighth supplement to the AOU checklist of North American birds. *Auk* 108:750-754.

Feeney, L. 1992. Site fidelity in burrowing owls. Unpublished paper presented to Raptor Research Annual Meeting, November 1992. Seattle, Washington.

Haug, E. A. and L. W. Oliphant. 1990, Movements, activity patterns, and habitat use of burrowing owls in Saskatchewan. *J. Wildlife Management* 54:27-35.

Henny, C. J. and L. J. Blus. 1981. Artificial burrows provide new insight into burrowing owl nesting biology. *Raptor Research* 15:82-85.

Martin, D. J. 1973. Selected aspects of burrowing owl ecology and behavior. *Condor* 75:446-456.

Rich, T. 1984. Monitoring burrowing owl populations: Implications of burrow re-use. *Wildlife Society Bulletin* 12:178-180.

The California Burrowing Owl Consortium (CBOC). 1993. Burrowing owl survey protocol and mitigation guidelines. Tech. Rep. Burrowing Owl Consortium, Alviso, California.

Thomsen, L. 1971. Behavior and ecology of burrowing owls on the Oakland Municipal Airport. *Condor* 73:177-192.

Zarn, M. 1974. Burrowing owl. U. S. Department of Interior, Bureau of Land Management. Technical Note T-N 250. Denver, Colorado. 25 pp.

Reproductive Success of Burrowing Owls Using Artificial Nest Burrows in Southeastern Idaho

by Bruce Olenick

Artificial nest burrows were implanted in southeastern Idaho f'or burrowing owls in the spring of 1986. These artificial burrows consisted of a 12" x 12" x 8" wood nesting chamber with rernovable top and a 6 foot corrugated and perforated plastic drainage pipe 6 inches in diameter (Fig. 1). Earlier investigators claimed that artificial burrows must provide a natural dirt floor to allow burrowing owls to modify the nesting tunnel and chamber. Contrary to this, the artificial burrow introduced here does not allow owls to modify the entrance or tunnel. The inability to change the physical dimensions of the burrow tunnel does not seem to reflect the owls' breeding success or deter them from using this burrow design.

In 1936, 22 artificial burrows were inhabited. Thirteen nesting attempts yielded an average clutch size of 8.3 eggs per breeding pair. Eight nests successfully hatched at least 1 nestling. In these nests, *67 of 75* eggs hatched (59.3%) and an estimated 61 nestlings (91.0%) fledged. An analysis of the egg laying and incubation periods showed that incubation commenced well after egg laying bega. Average clutch size at the start of incubation was 5.6 eggs. Most eggs tended to hatch synchronously in all successful nests.

Although the initial cost of constructing this burrow design may be slightly higher than a burrow consisting entirely of wood, the plastic pipe burrow offers the following advantages: (1) it lasts several field seasons without rotting or collapsing; (2) it may prevent or retard predation; (3) construction time is minimal; (4) it is easy to transport, especially over long distances; and (5) the flexible tunnel simplifies installation. The use of this artificial nest burrow design was highly successful and may prove to be a great resource technique for future management of this species.

For additional information on constructing this artificial nest burrow, contact Bruce Olenick, Department of Biology, Idaho State University, Pocatello, ID 83209.

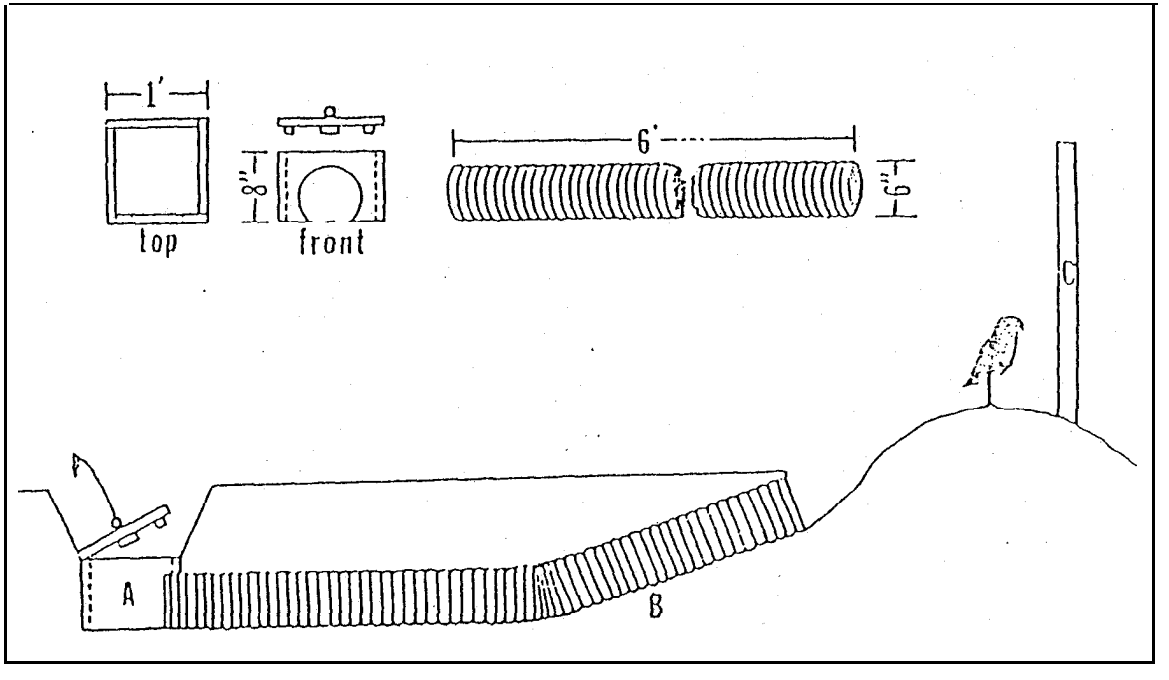

fig. 1 Artificial nest burrow design for burrowing owls Entire unit (including nest chamber) is buried 12" -- 18" below ground for maintaining thermal stability of the nest chamber. A= nest chamber, B = plastic pipe. C = perch.

ATTACHMENT A

FINAL ENVIRONMENTAL ASSESSMENT

SOUTH INTERCONNECTION BETWEEN NORTH KERN WATER STORAGE DISTRICT AND SHAFTER-WASCO IRRIGATION DISTRICT

Appendix D
Air Quality Emission Factors

December 2010

SCAB Fleet Average Emission Factors (Diesel)

2012

Air Basin	SC

		(lb/hr)	(lb/hr)	(lb/hr)	(lb/hr)	(lb/hr)	(lb/hr)	(lb/hr)
Equipment	**MaxHP**	**ROG**	**CO**	**NOX**	**SOX**	**PM**	**CO2**	**CH4**
Aerial Lifts	15	0.0102	0.0528	0.0642	0.0001	0.0030	8.7	0.0009
	25	0.0175	0.0517	0.0957	0.0001	0.0055	11.0	0.0016
	50	0.0650	0.1822	0.1916	0.0003	0.0169	19.6	0.0059
	120	0.0607	0.2451	0.4012	0.0004	0.0324	38.1	0.0055
	500	0.1276	0.4941	1.6553	0.0021	0.0491	213	0.0115
	750	0.2379	0.8930	3.0795	0.0039	0.0903	385	0.0215
Aerial Lifts Composite		0.0576	0.1976	0.3249	0.0004	0.0219	34.7	0.0052
Air Compressors	15	0.0129	0.0494	0.0768	0.0001	0.0052	7.2	0.0012
	25	0.0286	0.0779	0.1337	0.0002	0.0087	14.4	0.0026
	50	0.1010	0.2646	0.2310	0.0003	0.0239	22.3	0.0091
	120	0.0891	0.3287	0.5333	0.0006	0.0492	47.0	0.0080
	175	0.1135	0.5074	0.8954	0.0010	0.0512	88.5	0.0102
	250	0.1066	0.3052	1.2194	0.0015	0.0379	131	0.0096
	500	0.1709	0.5726	1.9077	0.0023	0.0623	232	0.0154
	750	0.2681	0.8849	3.0371	0.0036	0.0980	358	0.0242
	1000	0.4533	1.5617	5.4098	0.0049	0.1589	486	0.0409
Air Compressors Composite		0.0984	0.3445	0.6494	0.0007	0.0469	63.6	0.0089
Bore/Drill Rigs	15	0.0120	0.0632	0.0754	0.0002	0.0029	10.3	0.0011
	25	0.0194	0.0658	0.1233	0.0002	0.0054	16.0	0.0017
	50	0.0351	0.2335	0.2768	0.0004	0.0149	31.0	0.0032
	120	0.0514	0.4724	0.5026	0.0009	0.0328	77.1	0.0046
	175	0.0750	0.7538	0.7479	0.0016	0.0366	141	0.0068
	250	0.0838	0.3435	0.8722	0.0021	0.0268	188	0.0076
	500	0.1354	0.5526	1.3152	0.0031	0.0437	311	0.0122
	750	0.2685	1.0916	2.6320	0.0062	0.0865	615	0.0242
	1000	0.4491	1.6773	6.6123	0.0093	0.1699	928	0.0405
Bore/Drill Rigs Composite		0.0854	0.5068	0.9013	0.0017	0.0367	165	0.0077
Cement and Morta	15	0.0075	0.0386	0.0475	0.0001	0.0023	6.3	0.0007
	25	0.0293	0.0852	0.1548	0.0002	0.0091	17.6	0.0026
Cement and Mortar Mixers Comp		0.0093	0.0425	0.0564	0.0001	0.0029	7.2	0.0008
Concrete/Industrial	25	0.0199	0.0678	0.1261	0.0002	0.0050	16.5	0.0018
	50	0.1047	0.3015	0.2972	0.0004	0.0268	30.2	0.0094
	120	0.1155	0.4880	0.7625	0.0009	0.0639	74.1	0.0104
	175	0.1685	0.8723	1.4507	0.0018	0.0767	160	0.0152
Concrete/Industrial Saws Compo		0.1090	0.4148	0.5910	0.0007	0.0491	58.5	0.0098
Cranes	50	0.1101	0.2979	0.2478	0.0003	0.0258	23.2	0.0099
	120	0.0982	0.3650	0.5844	0.0006	0.0533	50.1	0.0089
	175	0.1089	0.4838	0.8259	0.0009	0.0479	80.3	0.0098
	250	0.1103	0.3103	1.0712	0.0013	0.0388	112	0.0100
	500	0.1635	0.5691	1.5327	0.0018	0.0571	180	0.0148
	750	0.2767	0.9554	2.6486	0.0030	0.0974	303	0.0250
	9999	0.9905	3.5715	10.9484	0.0098	0.3384	971	0.0894
Cranes Composite		0.1425	0.4946	1.2753	0.0014	0.0553	129	0.0129
Crawler Tractors	50	0.1262	0.3333	0.2713	0.0003	0.0289	24.9	0.0114
	120	0.1374	0.4906	0.8120	0.0008	0.0729	65.8	0.0124
	175	0.1758	0.7491	1.3245	0.0014	0.0765	121	0.0159
	250	0.1854	0.5225	1.7044	0.0019	0.0667	166	0.0167
	500	0.2659	1.0217	2.3914	0.0025	0.0942	259	0.0240
	750	0.4784	1.8248	4.3817	0.0047	0.1705	465	0.0432
	1000	0.7229	2.8959	7.7626	0.0066	0.2503	658	0.0652

Crawler Tractors Composite		0.1671	0.6051	1.2309	0.0013	0.0752	114	0.0151
Crushing/Proc. Equ	50	0.1927	0.5215	0.4545	0.0006	0.0462	44.0	0.0174
	120	0.1525	0.5829	0.9172	0.0010	0.0851	83.1	0.0138
	175	0.2088	0.9654	1.6343	0.0019	0.0946	167	0.0188
	250	0.1953	0.5592	2.1896	0.0028	0.0682	245	0.0176
	500	0.2733	0.8961	2.9457	0.0037	0.0972	374	0.0247
	750	0.4361	1.3892	4.8387	0.0059	0.1560	589	0.0394
	9999	1.2112	4.0327	14.2648	0.0131	0.4203	1,308	0.1093
Crushing/Proc. Equipment Comp		0.1872	0.6911	1.2633	0.0015	0.0819	132	0.0169
Dumpers/Tenders	25	0.0100	0.0324	0.0614	0.0001	0.0031	7.6	0.0009
Dumpers/Tenders Composite		0.0100	0.0324	0.0614	0.0001	0.0031	7.6	0.0009
Excavators	25	0.0198	0.0677	0.1253	0.0002	0.0048	16.4	0.0018
	50	0.0912	0.2933	0.2568	0.0003	0.0237	25.0	0.0082
	120	0.1183	0.5220	0.7300	0.0009	0.0657	73.6	0.0107
	175	0.1288	0.6678	0.9613	0.0013	0.0569	112	0.0116
	250	0.1301	0.3630	1.2438	0.0018	0.0415	159	0.0117
	500	0.1805	0.5493	1.6112	0.0023	0.0574	234	0.0163
	750	0.3013	0.9096	2.7605	0.0039	0.0969	387	0.0272
Excavators Composite		0.1300	0.5401	0.9817	0.0013	0.0536	120	0.0117
Forklifts	50	0.0514	0.1682	0.1488	0.0002	0.0136	14.7	0.0046
	120	0.0489	0.2195	0.3017	0.0004	0.0277	31.2	0.0044
	175	0.0624	0.3304	0.4664	0.0006	0.0278	56.1	0.0056
	250	0.0595	0.1638	0.5872	0.0009	0.0187	77.1	0.0054
	500	0.0806	0.2241	0.7257	0.0011	0.0252	111	0.0073
Forklifts Composite		0.0585	0.2257	0.4330	0.0006	0.0231	54.4	0.0053
Generator Sets	15	0.0157	0.0698	0.1063	0.0002	0.0061	10.2	0.0014
	25	0.0276	0.0951	0.1632	0.0002	0.0096	17.6	0.0025
	50	0.0959	0.2734	0.2966	0.0004	0.0255	30.6	0.0087
	120	0.1206	0.4956	0.8099	0.0009	0.0640	77.9	0.0109
	175	0.1460	0.7413	1.3131	0.0016	0.0644	142	0.0132
	250	0.1372	0.4502	1.8047	0.0024	0.0508	213	0.0124
	500	0.1952	0.7617	2.5896	0.0033	0.0756	337	0.0176
	750	0.3257	1.2296	4.3019	0.0055	0.1241	544	0.0294
	9999	0.8673	3.0642	10.8871	0.0105	0.3104	1,049	0.0783
Generator Sets Composite		0.0832	0.3121	0.5779	0.0007	0.0351	61.0	0.0075
Graders	50	0.1182	0.3365	0.2882	0.0004	0.0286	27.5	0.0107
	120	0.1348	0.5355	0.8223	0.0009	0.0740	75.0	0.0122
	175	0.1554	0.7363	1.1931	0.0014	0.0688	124	0.0140
	250	0.1575	0.4508	1.5344	0.0019	0.0547	172	0.0142
	500	0.1947	0.6639	1.8193	0.0023	0.0671	229	0.0176
	750	0.4147	1.4022	3.9602	0.0049	0.1439	486	0.0374
Graders Composite		0.1533	0.6129	1.2503	0.0015	0.0649	133	0.0138
Off-Highway Tracto	120	0.2224	0.7269	1.2964	0.0011	0.1143	93.7	0.0201
	175	0.2135	0.8404	1.6085	0.0015	0.0923	130	0.0193
	250	0.1718	0.4896	1.5282	0.0015	0.0644	130	0.0155
	750	0.6814	3.0883	6.1417	0.0057	0.2515	568	0.0615
	1000	1.0246	4.8137	10.5080	0.0082	0.3620	814	0.0924
Off-Highway Tractors Composite		0.2170	0.7878	1.7969	0.0017	0.0871	151	0.0196
Off-Highway Truck	175	0.1533	0.7593	1.1072	0.0014	0.0666	125	0.0138
	250	0.1469	0.3944	1.3513	0.0019	0.0461	167	0.0133
	500	0.2263	0.6661	1.9463	0.0027	0.0705	272	0.0204
	750	0.3695	1.0792	3.2612	0.0044	0.1164	442	0.0333
	1000	0.5790	1.7854	6.4025	0.0063	0.1933	625	0.0522
Off-Highway Trucks Composite		0.2241	0.6635	2.0158	0.0027	0.0715	260	0.0202
Other Construction	15	0.0118	0.0617	0.0737	0.0002	0.0028	10.1	0.0011
	25	0.0160	0.0544	0.1019	0.0002	0.0044	13.2	0.0014
	50	0.0842	0.2740	0.2707	0.0004	0.0228	28.0	0.0076
	120	0.1104	0.5320	0.7540	0.0009	0.0633	80.9	0.0100
	175	0.1008	0.5880	0.8599	0.0012	0.0467	107	0.0091

	500	0.1517	0.5426	1.6573	0.0025	0.0545	254	0.0137
Other Construction Equipment Co		0.0925	0.3847	0.8599	0.0013	0.0366	123	0.0083
Other General Indu	15	0.0066	0.0391	0.0466	0.0001	0.0018	6.4	0.0006
	25	0.0185	0.0632	0.1170	0.0002	0.0045	15.3	0.0017
	50	0.1085	0.2856	0.2332	0.0003	0.0253	21.7	0.0098
	120	0.1274	0.4542	0.7277	0.0007	0.0703	62.0	0.0115
	175	0.1349	0.5757	1.0001	0.0011	0.0599	95.9	0.0122
	250	0.1235	0.3281	1.2983	0.0015	0.0417	136	0.0111
	500	0.2232	0.6772	2.2367	0.0026	0.0758	265	0.0201
	750	0.3707	1.1162	3.8016	0.0044	0.1273	437	0.0334
	1000	0.5621	1.8453	6.4018	0.0056	0.1947	560	0.0507
Other General Industrial Equipme		0.1635	0.5362	1.4520	0.0016	0.0632	152	0.0148
Other Material Han	50	0.1506	0.3950	0.3243	0.0004	0.0352	30.3	0.0136
	120	0.1239	0.4423	0.7103	0.0007	0.0684	60.7	0.0112
	175	0.1703	0.7292	1.2706	0.0014	0.0759	122	0.0154
	250	0.1305	0.3496	1.3863	0.0016	0.0443	145	0.0118
	500	0.1590	0.4876	1.6124	0.0019	0.0545	192	0.0143
	9999	0.7467	2.4395	8.4619	0.0073	0.2565	741	0.0674
Other Material Handling Equipme		0.1566	0.5108	1.4125	0.0015	0.0613	141	0.0141
Pavers	25	0.0255	0.0811	0.1531	0.0002	0.0080	18.7	0.0023
	50	0.1451	0.3680	0.3038	0.0004	0.0327	28.0	0.0131
	120	0.1467	0.5107	0.8788	0.0008	0.0776	69.2	0.0132
	175	0.1864	0.7833	1.4495	0.0014	0.0819	128	0.0168
	250	0.2182	0.6365	2.0698	0.0022	0.0818	194	0.0197
	500	0.2383	0.9957	2.2418	0.0023	0.0883	233	0.0215
Pavers Composite		0.1596	0.5445	0.8980	0.0009	0.0642	77.9	0.0144
Paving Equipment	25	0.0153	0.0520	0.0974	0.0002	0.0042	12.6	0.0014
	50	0.1239	0.3124	0.2591	0.0003	0.0279	23.9	0.0112
	120	0.1150	0.3997	0.6897	0.0006	0.0610	54.5	0.0104
	175	0.1455	0.6114	1.1384	0.0011	0.0640	101	0.0131
	250	0.1349	0.3946	1.2976	0.0014	0.0507	122	0.0122
Paving Equipment Composite		0.1204	0.4365	0.8114	0.0008	0.0570	68.9	0.0109
Plate Compactors	15	0.0050	0.0263	0.0314	0.0001	0.0013	4.3	0.0005
Plate Compactors Composite		0.0050	0.0263	0.0314	0.0001	0.0013	4.3	0.0005
Pressure Washers	15	0.0075	0.0334	0.0509	0.0001	0.0029	4.9	0.0007
	25	0.0112	0.0385	0.0662	0.0001	0.0039	7.1	0.0010
	50	0.0349	0.1074	0.1339	0.0002	0.0102	14.3	0.0032
	120	0.0332	0.1458	0.2385	0.0003	0.0172	24.1	0.0030
Pressure Washers Composite		0.0173	0.0635	0.0921	0.0001	0.0063	9.4	0.0016
Pumps	15	0.0133	0.0508	0.0790	0.0001	0.0054	7.4	0.0012
	25	0.0386	0.1051	0.1803	0.0002	0.0117	19.5	0.0035
	50	0.1155	0.3229	0.3362	0.0004	0.0299	34.3	0.0104
	120	0.1250	0.5036	0.8226	0.0009	0.0669	77.9	0.0113
	175	0.1498	0.7431	1.3164	0.0016	0.0664	140	0.0135
	250	0.1357	0.4345	1.7375	0.0023	0.0501	201	0.0122
	500	0.2089	0.8032	2.6861	0.0034	0.0803	345	0.0188
	750	0.3557	1.3279	4.5700	0.0057	0.1350	571	0.0321
	9999	1.1456	4.0641	14.2305	0.0136	0.4081	1,355	0.1034
Pumps Composite		0.0813	0.2983	0.4999	0.0006	0.0351	49.6	0.0073
Rollers	15	0.0074	0.0386	0.0461	0.0001	0.0018	6.3	0.0007
	25	0.0162	0.0549	0.1029	0.0002	0.0045	13.3	0.0015
	50	0.1105	0.2994	0.2677	0.0003	0.0263	26.0	0.0100
	120	0.1054	0.4098	0.6619	0.0007	0.0574	59.0	0.0095
	175	0.1320	0.6220	1.0725	0.0012	0.0591	108	0.0119
	250	0.1347	0.4083	1.4103	0.0017	0.0498	153	0.0122
	500	0.1755	0.6752	1.8093	0.0022	0.0652	219	0.0158
Rollers Composite		0.1038	0.4107	0.6936	0.0008	0.0488	67.1	0.0094
Rough Terrain Fork	50	0.1315	0.3910	0.3455	0.0004	0.0330	33.9	0.0119
	120	0.1038	0.4364	0.6425	0.0007	0.0585	62.4	0.0094

	175	0.1444	0.7268	1.1204	0.0014	0.0652	125	0.0130
	250	0.1353	0.3896	1.4082	0.0019	0.0458	171	0.0122
	500	0.1894	0.5985	1.8577	0.0025	0.0642	257	0.0171
Rough Terrain Forklifts Composit		0.1093	0.4680	0.6995	0.0008	0.0587	70.3	0.0099
Rubber Tired Doze	175	0.2209	0.8528	1.6304	0.0015	0.0945	129	0.0199
	250	0.2545	0.7124	2.1985	0.0021	0.0942	183	0.0230
	500	0.3345	1.5220	2.8822	0.0026	0.1210	265	0.0302
	750	0.5042	2.2809	4.4100	0.0040	0.1832	399	0.0455
	1000	0.7807	3.6654	7.7816	0.0060	0.2729	592	0.0704
Rubber Tired Dozers Composite		0.3114	1.2491	2.6866	0.0025	0.1137	239	0.0281
Rubber Tired Load	25	0.0205	0.0697	0.1295	0.0002	0.0052	16.9	0.0018
	50	0.1315	0.3756	0.3242	0.0004	0.0319	31.1	0.0119
	120	0.1045	0.4187	0.6404	0.0007	0.0576	58.9	0.0094
	175	0.1312	0.6288	1.0135	0.0012	0.0583	106	0.0118
	250	0.1330	0.3838	1.3129	0.0017	0.0462	149	0.0120
	500	0.1961	0.6755	1.8555	0.0023	0.0677	237	0.0177
	750	0.4044	1.3812	3.9115	0.0049	0.1408	486	0.0365
	1000	0.5480	1.9543	6.3337	0.0060	0.1909	594	0.0494
Rubber Tired Loaders Composite		0.1272	0.4855	1.0034	0.0012	0.0558	109	0.0115
Scrapers	120	0.1990	0.7011	1.1749	0.0011	0.1054	93.9	0.0180
	175	0.2172	0.9158	1.6429	0.0017	0.0945	148	0.0196
	250	0.2367	0.6699	2.1849	0.0024	0.0859	209	0.0214
	500	0.3333	1.3000	3.0162	0.0032	0.1190	321	0.0301
	750	0.5779	2.2380	5.3231	0.0056	0.2075	555	0.0521
Scrapers Composite		0.2916	1.0984	2.5680	0.0027	0.1087	262	0.0263
Signal Boards	15	0.0072	0.0377	0.0450	0.0001	0.0017	6.2	0.0006
	50	0.1270	0.3587	0.3564	0.0005	0.0324	36.2	0.0115
	120	0.1284	0.5269	0.8360	0.0009	0.0703	80.2	0.0116
	175	0.1661	0.8370	1.4268	0.0017	0.0750	155	0.0150
	250	0.1746	0.5516	2.1599	0.0029	0.0639	255	0.0158
Signal Boards Composite		0.0203	0.0940	0.1470	0.0002	0.0083	16.7	0.0018
Skid Steer Loaders	25	0.0211	0.0635	0.1189	0.0002	0.0067	13.8	0.0019
	50	0.0596	0.2332	0.2402	0.0003	0.0180	25.5	0.0054
	120	0.0482	0.2769	0.3536	0.0005	0.0286	42.8	0.0043
Skid Steer Loaders Composite		0.0534	0.2360	0.2686	0.0004	0.0207	30.3	0.0048
Surfacing Equipme	50	0.0513	0.1441	0.1411	0.0002	0.0128	14.1	0.0046
	120	0.1040	0.4251	0.6895	0.0007	0.0557	63.8	0.0094
	175	0.0950	0.4745	0.8195	0.0010	0.0422	85.8	0.0086
	250	0.1095	0.3526	1.1993	0.0015	0.0413	135	0.0099
	500	0.1631	0.6813	1.7819	0.0022	0.0622	221	0.0147
	750	0.2601	1.0660	2.8642	0.0035	0.0986	347	0.0235
Surfacing Equipment Composite		0.1362	0.5467	1.3678	0.0017	0.0512	166	0.0123
Sweepers/Scrubbe	15	0.0124	0.0729	0.0870	0.0002	0.0034	11.9	0.0011
	25	0.0237	0.0808	0.1501	0.0002	0.0060	19.6	0.0021
	50	0.1195	0.3565	0.3179	0.0004	0.0302	31.6	0.0108
	120	0.1233	0.5204	0.7534	0.0009	0.0706	75.0	0.0111
	175	0.1575	0.8008	1.2212	0.0016	0.0717	139	0.0142
	250	0.1205	0.3447	1.3019	0.0018	0.0402	162	0.0109
Sweepers/Scrubbers Composite		0.1278	0.5215	0.7403	0.0009	0.0576	78.5	0.0115
Tractors/Loaders/B	25	0.0199	0.0662	0.1250	0.0002	0.0061	15.9	0.0018
	50	0.1006	0.3305	0.3030	0.0004	0.0267	30.3	0.0091
	120	0.0760	0.3557	0.4910	0.0006	0.0432	51.7	0.0069
	175	0.1058	0.5866	0.8294	0.0011	0.0478	101	0.0095
	250	0.1264	0.3755	1.2813	0.0019	0.0415	172	0.0114
	500	0.2386	0.7714	2.2621	0.0039	0.0784	345	0.0215
	750	0.3611	1.1563	3.5105	0.0058	0.1199	517	0.0326
Tractors/Loaders/Backhoes Com		0.0862	0.3824	0.5816	0.0008	0.0435	66.8	0.0078
Trenchers	15	0.0099	0.0517	0.0617	0.0001	0.0024	8.5	0.0009
	25	0.0398	0.1355	0.2519	0.0004	0.0101	32.9	0.0036

	50	0.1656	0.4176	0.3536	0.0004	0.0374	32.9	0.0149
	120	0.1354	0.4732	0.8257	0.0008	0.0709	64.9	0.0122
	175	0.2050	0.8694	1.6306	0.0016	0.0901	144	0.0185
	250	0.2483	0.7418	2.3854	0.0025	0.0951	223	0.0224
	500	0.3135	1.4011	3.0220	0.0031	0.1190	311	0.0283
	750	0.5949	2.6307	5.8034	0.0059	0.2259	587	0.0537
Trenchers Composite		0.1507	0.4749	0.6995	0.0007	0.0582	58.7	0.0136
Welders	15	0.0111	0.0425	0.0660	0.0001	0.0045	6.2	0.0010
	25	0.0224	0.0609	0.1044	0.0001	0.0068	11.3	0.0020
	50	0.1071	0.2854	0.2637	0.0003	0.0260	26.0	0.0097
	120	0.0708	0.2687	0.4376	0.0005	0.0387	39.5	0.0064
	175	0.1183	0.5475	0.9688	0.0011	0.0531	98.2	0.0107
	250	0.0909	0.2704	1.0791	0.0013	0.0329	119	0.0082
	500	0.1154	0.4072	1.3538	0.0016	0.0431	168	0.0104
Welders Composite		0.0703	0.2150	0.2702	0.0003	0.0243	25.6	0.0063

Highest (Most Conservative) EMFAC2007 (version 2.3)
Emission Factors for On-Road Passenger Vehicles & Delivery Trucks

Projects in the SCAQMD (Scenario Years 2007 - 2026)
Derived from Peak Emissions Inventory (**Winter**, **Annual**, **Summer**)

Vehicle Class:
Passenger Vehicles (<8500 pounds) & Delivery Trucks (>8500 pounds)

The following emission factors were compiled by running the California Air Resources Board's EMFAC2007 (version 2.3) Burden Model, taking the weighted average of vehicle types and simplifying into two categories:
Passenger Vehicles & Delivery Trucks.

These emission factors can be used to calculate on-road mobile source emissions for the vehicle categories listed in the tables below, by use of the following equation:

Emissions (pounds per day) = N x TL x EF

where N = number of trips, TL = trip length (miles/day), and EF = emission factor (pounds per mile)

This methodology replaces the old EMFAC emission factors in Tables A-9-5-J-1 through A-9-5-L in Appendix A9 of the current SCAQMD CEQA Handbook. All the emission factors account for the emissions from start, running and idling exhaust. In addition, the ROG emission factors include diurnal, hot soak, running and resting emissions, and the PM10 & PM2.5 emission factors include tire and brake wear.

Scenario Year: **2007**
All model years in the range 1965 to 2007

Passenger Vehicles (pounds/mile)		Delivery Trucks (pounds/mile)	
CO	0.01155158	CO	0.02407553
NOx	0.00121328	NOx	0.02508445
ROG	0.00118234	ROG	0.00323145
SOx	0.00001078	SOx	0.00002626
PM10	0.00008447	PM10	0.00091020
PM2.5	0.00005243	PM2.5	0.00078884
CO2	1.10672236	CO2	2.72245619
CH4	0.00010306	CH4	0.00016030

Scenario Year: **2008**
All model years in the range 1965 to 2008

Passenger Vehicles (pounds/mile)		Delivery Trucks (pounds/mile)	
CO	0.01054844	CO	0.02194915
NOx	0.00110288	NOx	0.02371258
ROG	0.00107919	ROG	0.00299270
SOx	0.00001075	SOx	0.00002565
PM10	0.00008505	PM10	0.00085607
PM2.5	0.00005293	PM2.5	0.00073933
CO2	1.09953226	CO2	2.71943400
CH4	0.00009465	CH4	0.00014769

Scenario Year: **2009**
All model years in the range 1965 to 2009

Passenger Vehicles (pounds/mile)		Delivery Trucks (pounds/mile)	
CO	0.00968562	CO	0.02016075
NOx	0.00100518	NOx	0.02236636
ROG	0.00099245	ROG	0.00278899
SOx	0.00001066	SOx	0.00002679
PM10	0.00008601	PM10	0.00080550
PM2.5	0.00005384	PM2.5	0.00069228
CO2	1.09755398	CO2	2.72330496
CH4	0.00008767	CH4	0.00013655

Scenario Year: **2010**
All model years in the range 1966 to 2010

Passenger Vehicles (pounds/mile)		Delivery Trucks (pounds/mile)	
CO	0.00826276	CO	0.01843765
NOx	0.00091814	NOx	0.02062460
ROG	0.00091399	ROG	0.00258958
SOx	0.00001077	SOx	0.00002701
PM10	0.00008698	PM10	0.00075121
PM2.5	0.00005478	PM2.5	0.00064233
CO2	1.09568235	CO2	2.73222199
CH4	0.00008146	CH4	0.00012576

Highest (Most Conservative) EMFAC2007 (version 2.3)
Emission Factors for On-Road Passenger Vehicles & Delivery Trucks

Projects in the SCAQMD (Scenario Years 2007 - 2026)

Derived from Peak Emissions Inventory (**Winter**, **Annual**, **Summer**)

Vehicle Class:
Passenger Vehicles (<8500 pounds) & Delivery Trucks (>8500 pounds)

Scenario Year: **2011**

All model years in the range 1967 to 2011

Passenger Vehicles (pounds/mile)		Delivery Trucks (pounds/mile)	
CO	0.00826276	CO	0.01693242
NOx	0.00084460	NOx	0.01893366
ROG	0.00085233	ROG	0.00241868
SOx	0.00001077	SOx	0.00002728
PM10	0.00008879	PM10	0.00070097
PM2.5	0.00005653	PM2.5	0.00059682
CO2	1.10235154	CO2	2.75180822
CH4	0.00007678	CH4	0.00011655

Scenario Year: **2012**

All model years in the range 1968 to 2012

Passenger Vehicles (pounds/mile)		Delivery Trucks (pounds/mile)	
CO	0.00765475	CO	0.01545741
NOx	0.00077583	NOx	0.01732423
ROG	0.00079628	ROG	0.00223776
SOx	0.00001073	SOx	0.00002667
PM10	0.00008979	PM10	0.00064975
PM2.5	0.00005750	PM2.5	0.00054954
CO2	1.10152540	CO2	2.76628414
CH4	0.00007169	CH4	0.00010668

Scenario Year: **2013**

All model years in the range 1969 to 2013

Passenger Vehicles (pounds/mile)		Delivery Trucks (pounds/mile)	
CO	0.00709228	CO	0.01407778
NOx	0.00071158	NOx	0.01577311
ROG	0.00074567	ROG	0.00206295
SOx	0.00001072	SOx	0.00002682
PM10	0.00009067	PM10	0.00059956
PM2.5	0.00005834	PM2.5	0.00050174
CO2	1.10087435	CO2	2.78163459
CH4	0.00006707	CH4	0.00009703

Scenario Year: **2014**

All model years in the range 1970 to 2014

Passenger Vehicles (pounds/mile)		Delivery Trucks (pounds/mile)	
CO	0.00660353	CO	0.01284321
NOx	0.00065484	NOx	0.01425162
ROG	0.00070227	ROG	0.00189649
SOx	0.00001069	SOx	0.00002754
PM10	0.00009185	PM10	0.00054929
PM2.5	0.00005939	PM2.5	0.00045519
CO2	1.10257205	CO2	2.79845465
CH4	0.00006312	CH4	0.00008798

Scenario Year: **2015**

All model years in the range 1971 to 2015

Passenger Vehicles (pounds/mile)		Delivery Trucks (pounds/mile)	
CO	0.00614108	CO	0.01169445
NOx	0.00060188	NOx	0.01285026
ROG	0.00066355	ROG	0.00173890
SOx	0.00001070	SOx	0.00002741
PM10	0.00009259	PM10	0.00050307
PM2.5	0.00006015	PM2.5	0.00041268
CO2	1.10192837	CO2	2.81247685
CH4	0.00005923	CH4	0.00008076

Scenario Year: **2016**

All model years in the range 1972 to 2016

Passenger Vehicles (pounds/mile)		Delivery Trucks (pounds/mile)	
CO	0.00575800	CO	0.01080542
NOx	0.00055658	NOx	0.01172881
ROG	0.00063254	ROG	0.00161521
SOx	0.00001071	SOx	0.00002767
PM10	0.00009392	PM10	0.00046606
PM2.5	0.00006131	PM2.5	0.00037868
CO2	1.10677664	CO2	2.83134285
CH4	0.00005623	CH4	0.00007355

Highest (Most Conservative) EMFAC2007 (version 2.3)
Emission Factors for On-Road Passenger Vehicles & Delivery Trucks

Projects in the SCAQMD (Scenario Years 2007 - 2026)

Derived from Peak Emissions Inventory (**Winter**, **Annual**, **Summer**)

Vehicle Class:
Passenger Vehicles (<8500 pounds) & Delivery Trucks (>8500 pounds)

Scenario Year: **2017**

All model years in the range 1973 to 2017

Passenger Vehicles (pounds/mile)		Delivery Trucks (pounds/mile)	
CO	0.00537891	CO	0.00998101
NOx	0.00051297	NOx	0.01070034
ROG	0.00060109	ROG	0.00150242
SOx	0.00001079	SOx	0.00002723
PM10	0.00009446	PM10	0.00043131
PM2.5	0.00006192	PM2.5	0.00034605
CO2	1.10627489	CO2	2.84005015
CH4	0.00005300	CH4	0.00006663

Scenario Year: **2018**

All model years in the range 1974 to 2018

Passenger Vehicles (pounds/mile)		Delivery Trucks (pounds/mile)	
CO	0.00502881	CO	0.00923234
NOx	0.00047300	NOx	0.00979416
ROG	0.00057178	ROG	0.00139856
SOx	0.00001071	SOx	0.00002749
PM10	0.00009494	PM10	0.00040110
PM2.5	0.00006234	PM2.5	0.00031792
CO2	1.10562643	CO2	2.84646835
CH4	0.00005003	CH4	0.00006203

Scenario Year: **2019**

All model years in the range 1975 to 2019

Passenger Vehicles (pounds/mile)		Delivery Trucks (pounds/mile)	
CO	0.00471820	CO	0.00857192
NOx	0.00043716	NOx	0.00900205
ROG	0.00054654	ROG	0.00130563
SOx	0.00001072	SOx	0.00002706
PM10	0.00009523	PM10	0.00037393
PM2.5	0.00006259	PM2.5	0.00029276
CO2	1.10496100	CO2	2.85060182
CH4	0.00004743	CH4	0.00005619

Scenario Year: **2020**

All model years in the range 1976 to 2020

Passenger Vehicles (pounds/mile)		Delivery Trucks (pounds/mile)	
CO	0.00444247	CO	0.00799617
NOx	0.00040506	NOx	0.00831802
ROG	0.00052463	ROG	0.00122382
SOx	0.00001073	SOx	0.00002733
PM10	0.00009550	PM10	0.00035054
PM2.5	0.00006279	PM2.5	0.00027128
CO2	1.10456157	CO2	2.85148109
CH4	0.00004495	CH4	0.00005330

Scenario Year: **2021**

All model years in the range 1977 to 2021

Passenger Vehicles (pounds/mile)		Delivery Trucks (pounds/mile)	
CO	0.00421218	CO	0.00748303
NOx	0.00037757	NOx	0.00773500
ROG	0.00050573	ROG	0.00115568
SOx	0.00001073	SOx	0.00002755
PM10	0.00009640	PM10	0.00033125
PM2.5	0.00006364	PM2.5	0.00025331
CO2	1.11009559	CO2	2.86434187
CH4	0.00004322	CH4	0.00004905

Scenario Year: **2022**

All model years in the range 1978 to 2022

Passenger Vehicles (pounds/mile)		Delivery Trucks (pounds/mile)	
CO	0.00397866	CO	0.00699290
NOx	0.00035150	NOx	0.00722470
ROG	0.00048658	ROG	0.00108569
SOx	0.00001072	SOx	0.00002774
PM10	0.00009661	PM10	0.00031501
PM2.5	0.00006389	PM2.5	0.00023906
CO2	1.11019931	CO2	2.87006769
CH4	0.00004121	CH4	0.00004557

Highest (Most Conservative) EMFAC2007 (version 2.3)
Emission Factors for On-Road Passenger Vehicles & Delivery Trucks

Projects in the SCAQMD (Scenario Years 2007 - 2026)

Derived from Peak Emissions Inventory (**Winter**, **Annual**, **Summer**)

Vehicle Class:
Passenger Vehicles (<8500 pounds) & Delivery Trucks (>8500 pounds)

Scenario Year: **2023**

All model years in the range 1979 to 2023

Passenger Vehicles (pounds/mile)		Delivery Trucks (pounds/mile)	
CO	0.00377527	CO	0.00658123
NOx	0.00032851	NOx	0.00679147
ROG	0.00046900	ROG	0.00102852
SOx	0.00001070	SOx	0.00002790
PM10	0.00009676	PM10	0.00030109
PM2.5	0.00006405	PM2.5	0.00022582
CO2	1.11023373	CO2	2.87466338
CH4	0.00003951	CH4	0.00004218

Scenario Year: **2024**

All model years in the range 1980 to 2024

Passenger Vehicles (pounds/mile)		Delivery Trucks (pounds/mile)	
CO	0.00358611	CO	0.00625076
NOx	0.00030721	NOx	0.00647083
ROG	0.00045136	ROG	0.00096578
SOx	0.00001080	SOx	0.00002807
PM10	0.00009676	PM10	0.00029407
PM2.5	0.00006410	PM2.5	0.00021880
CO2	1.11061572	CO2	2.88010717
CH4	0.00003781	CH4	0.00004019

Scenario Year: **2025**

All model years in the range 1981 to 2025

Passenger Vehicles (pounds/mile)		Delivery Trucks (pounds/mile)	
CO	0.00342738	CO	0.00595363
NOx	0.00028846	NOx	0.00615945
ROG	0.00043545	ROG	0.00092178
SOx	0.00001070	SOx	0.00002761
PM10	0.00009679	PM10	0.00028425
PM2.5	0.00006418	PM2.5	0.00020958
CO2	1.11078571	CO2	2.88143570
CH4	0.00003641	CH4	0.00003765

Scenario Year: **2026**

All model years in the range 1982 to 2026

Passenger Vehicles (pounds/mile)		Delivery Trucks (pounds/mile)	
CO	0.00328779	CO	0.00569435
NOx	0.00027141	NOx	0.00589869
ROG	0.00042052	ROG	0.00088403
SOx	0.00001076	SOx	0.00002716
PM10	0.00009687	PM10	0.00027657
PM2.5	0.00006415	PM2.5	0.00020187
CO2	1.11105829	CO2	2.88298299
CH4	0.00003518	CH4	0.00003581

FINAL ENVIRONMENTAL ASSESSMENT

SOUTH INTERCONNECTION BETWEEN NORTH KERN WATER STORAGE DISTRICT AND SHAFTER-WASCO IRRIGATION DISTRICT

Appendix E
SHPO Concurrence Memo

December 2010

OFFICE OF HISTORIC PRESERVATION
DEPARTMENT OF PARKS AND RECREATION
1725 23rd Street, Suite 100
SACRAMENTO, CA 95816-7100
(916) 445-7000 Fax: (916) 445-7053
calshpo@parks.ca.gov
www.ohp.parks.ca.gov

BUREAU OF RECLAMATION
OFFICIAL FILE COPY
RECEIVED
NOV 8 2010
CODE ACTION SURNAME & DATE
150 ✓ 11/8/2010

November 3, 2010

In Reply Refer To: BUR101029B

Michael A. Chotkowski
Regional Environmental Officer
United States Department of the Interior
Bureau of Reclamation
Mid-Pacific Regional Office
2800 Cottage Way
Sacramento, CA 95825-1898

Re: South Interconnection Project Between North-Kern Water Storage District and Shafter-Wasco Irrigation District, Kern County, California (Project No. 10-SCAO-304).

Dear Mr. Chotkowski:

Thank you for consulting with me regarding the above noted undertaking. Pursuant to 36 CFR Part 800 (as amended 8-05-04) regulations implementing Section 106 of the National Historic Preservation Act (NHPA), the Bureau of Reclamation (BUR) is the lead Federal agency for this undertaking and is seeking my comments on the effects that the proposed project will have on historic properties. The undertaking consists of the award of a WaterSMART grant to the Shafter-Wasco Irrigation District (SWID) for the construction of an intertie between SWID and the North-Kern Water Storage District (NKWSD). The project would connect NKWSD's 8-5 Lateral Canal and SWID's Lateral 137.2 underground pipeline. It is located adjacent to, but outside of, the BUR's Friant-Kern Canal (FKC). The BUR has identified this use of federal funds for this project as an undertaking subject to review under Section 106 regulations.

Proposed project activities include the installation of a new turnout within the 8-5 lateral and the installation of a 35-foot long, 36-inch diameter pipeline connecting the canal to Lateral 137.2. Access and staging are from existing service roads. The BUR has determined that the area of potential effects (APE) consists of an area of 0.6 acre that includes all construction and staging locations. In addition to your letter of October 29, 2010, you have submitted the following document to evidence your efforts to identify and evaluate historic properties in the APE:

- *A Cultural Resources Assessment for the South Interconnection Between North Kern Water Storage District and Shafter-Wasco Irrigation District, Kern County, California* (Catherine Lewis Pruett, Three Girls and a Shovel, LLC: October 2010).

Classification ENV-3.00
Project 214
Control No. 1008818
Folder I.D. 1114652-1
Date Input & Initials 11/8/2010 J.S.

The BUR has concluded that SWID's Lateral 137.2 is the only historic property in the project APE. Exceeding 50 years of age, Lateral 137.2 is a component of the SWID water conveyance system that was important in the development of the agricultural economy of this portion of the San Joaquin Valley. Lacking the resources, within the

constraints of this undertaking, to fully evaluate the SWID system under National Register of Historic Places (NRHP) criteria, the BUR assumes that it is eligible for the NRHP for the purposes of this undertaking. Under this strategy, the BUR has determined that the proposed undertaking is a standard type of maintenance and facility upgrade that will not alter any of the characteristics that impart NRHP eligibility to Lateral 137.2 underground pipeline. Consequently, the BUR has determined that this undertaking can be constructed with No Adverse Effect in accordance with 36 CFR Part 800.5(b).

After having reviewed your letter of October 29, 2010, and supporting documentation, I have no objection to your proposed finding of No Adverse Effect. Be advised that under certain circumstances, such as unanticipated discovery or a change in project description, the BUR may have additional future responsibilities for this undertaking under 36 CFR Part 800. Thank you for seeking my comments and for considering historic properties in planning your project. If you require further information, please contact William Soule, Associate State Archeologist, at phone 916-445-7022 or email wsoule@parks.ca.gov.

Sincerely,

Susan K Stratton for

Milford Wayne Donaldson, FAIA
State Historic Preservation Officer

FINAL ENVIRONMENTAL ASSESSMENT

SOUTH INTERCONNECTION BETWEEN NORTH KERN WATER STORAGE DISTRICT AND SHAFTER-WASCO IRRIGATION DISTRICT

Appendix F
Environmental Documents

December 2010

Healer, Rain L

From: McDonald, Shauna A
Sent: Monday, November 15, 2010 12:10 PM
To: Healer, Rain L
Cc: Hyatt, David E
Subject: RE: SWID South Intertie Project

Hi Rain. So, the action area was surveyed recently by a qualified biologist. He found that the only two special-status species that could potentially occur there are the San Joaquin kit fox and the western burrowing owl. However, he found no evidence that either species was currently using the area. There is no critical habitat there. Therefore, because the disturbance is largely temporary (especially where these species could occur), because the species at issue are not currently there, and avoidance measures would be implemented, we made a "no effect" determination for federally listed and proposed species, critical habitat, and migratory birds. The survey is recent but has expired as a preconstruction survey. Therefore, another one would need to be done 14-30 days prior to the start of work to verify that any kit foxes or burrowing owls have not moved in. If any have, they would need to be properly avoided if possible, or if not possible, the owls would either have to be passively relocated or the work delayed until they moved from their burrows, and a consultation with the Service would be required for the kit fox. I don't think this is likely to happen—the site is agricultural and surrounded by more ag lands. So kit foxes aren't very likely to den there. Burrowing owls sometimes move around seasonally but the work is supposed to happen not long after the first survey was done. We are technically in-between the peak breeding and the wintering seasons right now whereas the work would occur in the actual wintering season, but because no burrows or atypical dens (which owls could also use) were found at all, I don't expect the situation to change for this winter. At this point because it's getting cold, I would think the ground squirrels should be spending a lot of time underground and not be out digging new burrows.

Thanks.

Shauna A. McDonald
Wildlife Biologist
Bureau of Reclamation
South-Central California Area Office
Fresno, CA 93721
(559) 487-5202
(559) 487-5397 (fax)
smcdonald@usbr.gov

From: Healer, Rain L
Sent: Friday, November 12, 2010 9:15 AM
To: McDonald, Shauna A
Subject: RE: SWID South Intertie Project

Shauna,

Could I get an email from you to include in the draft EA that indicates your ESA determination? Thank you.

Rain

From: McDonald, Shauna A
Sent: Monday, November 01, 2010 3:50 PM

To: Healer, Rain L
Subject: RE: SWID South Intertie Project

Hi Rain. Here is a version with a bio section drafted into it.

Thanks,
Shauna

From: Healer, Rain L
Sent: Friday, October 29, 2010 9:22 AM
To: McDonald, Shauna A
Subject: SWID South Intertie Project

Shauna,

I have attached the draft EA that I have put together for the project. Could you take a look at it and prepare the bio section. I also have a bio report done by the consultants. I think I sent it to you, but if not, it is also attached.

Rain L. Healer
Natural Resource Specialist
Bureau of Reclamation
1243 N Street, SCC 413
Fresno, CA 93721
(559) 487-5196
rhealer@usbr.gov

Healer, Rain L

From: Overly, Stephen A
Sent: Friday, November 12, 2010 8:56 AM
To: Healer, Rain L
Cc: Crandell, Melissa L; Perry, Laureen (Laurie) M; Nickels, Adam M; Bruce, Brandee E; Barnes, Amy J; Goodsell, Joanne E; Leigh, Anastasia T; Fogerty, John A; Dunay, Amy L
Subject: Section 106 Complete for South Interconnection between KNWSD and SWID
Attachments: image001.jpg; 10-SCAO-304 SHPO Submittal.pdf; 10-SCAO-304_CASHPO Concurrence.pdf

10-SCAO-304

Hi Rain,

Reclamation proposes to award a WaterSMART grant to SWID for the construction of an intertie between SWID and NKWSD. The project would connect NKWSD's 8-5 Lateral Canal and SWID's Lateral 137.2 underground pipeline. The use of Federal funds for this is an undertaking, as defined by Section 301(7) of the NHPA (16 U.S.C. 470). Reclamation therefore consulted with the California State Historic Preservation Officer pursuant to the 36 CFR 800 Regulations that implement Section 106 of the NHPA.

To facilitate the consultation, archaeologists hired by the project proponent conducted a record search at the appropriate regional information center, contacted the Native American Heritage Commission, and completed a pedestrian survey and found no archaeological resources and only one cultural resource exceeding 50 years (Lateral 137.2) in the area of potential effects (APE). These results were provided to Reclamation in a report. The report also contained an Appendix in which another consultant recommended Lateral 137.2 was not eligible for the National Register and offered the suggestion the project would result in no historic properties affected (36 CFR Part 800.4[d][1]).

Since the National Register evaluation recommending that Lateral was not a historic property was not sufficient and the project timeline did not allow for appropriate revisions, Reclamation only used the archaeological survey portion of the consultant's report. Reclamation further assumed for the purposes of this project only that the Lateral 137.2 was indeed eligible for the National Register but that the proposed installation of a turn-out on the lateral would result in no adverse effect to historic properties (36 CFR Part 800.5[b]).

Reclamation entered into consultation with the California State Historic Preservation Officer (SHPO) on this finding on October 29, 2010 (attached). SHPO concurred with Reclamation on November 2, 2010 and the letter was received in our office on November 5, 2010 (also attached).

This completes the Section 106 process for this action. Please retain a copy of this e-mail and the letters for your files. If project activities or the footprint changes, then additional Section 106 review, including additional consultation with SHPO, may be necessary.

I have provided comments on the draft EA in a separate transmittal. Thank you for considering cultural resources during project planning.

Tony

Stephen (Tony) Overly, M.A. Archaeologist
U.S. Bureau of Reclamation, Mid-Pacific Region
2800 Cottage Way, MP-153
Sacramento, CA 95825
916-978-5552

Healer, Rain L

From: Rivera, Patricia L
Sent: Wednesday, September 15, 2010 8:17 AM
To: Healer, Rain L
Subject: RE: EA-10-59 South Interconnection between NKWSD and SWID

Rain,

I reviewed the proposed action to award a 2010 Water and Energy Efficiency WaterSMART grant to Shafter-Wasco Irrigation District (SWID) for the construction of an intertie between North Kern Water Storage District's (NKWSD) 8-5 Lateral Canal and SWID's Lateral 137.2 underground pipeline. The Construction components include installation of a new turnout within the 8-5 Lateral Canal and 36-inch diameter steel pipe connecting the canal to Lateral 137.2. Access and staging for the Proposed Action would be via NKWSD's existing 8-5 Lateral Canal Operations and Maintenance Road.

The proposed action does not have a potential to affect Indian Trust Assets. The nearest ITA is Tule River Reservation is approximately 39 miles NE of the project location.

Patricia

From: Healer, Rain L
Sent: Tuesday, September 14, 2010 5:08 PM
To: Rivera, Patricia L; Robbins, Eleanor J (Ellie); Williams, Mary D (Diane)
Subject: EA-10-59 South Interconnection between NKWSD and SWID

Patricia,

I have attached the project description for a 2010 Water and Energy and Efficiency Grant for the South Interconnection between North Kern Water Storage District and Shafter-Wasco Irrigation District.

Rain L. Healer
Natural Resource Specialist
Bureau of Reclamation
1243 N Street, SCC 413
Fresno, CA 93721
(559) 487-5196
rhealer@usbr.gov