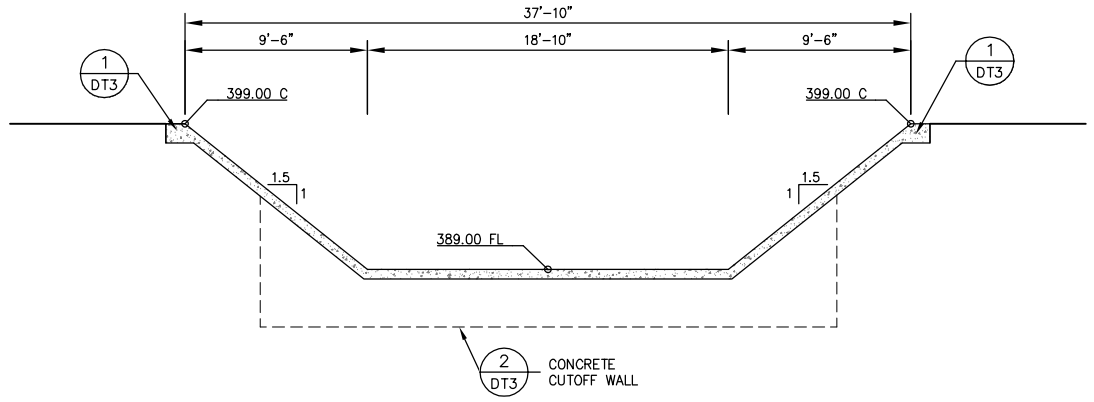

SCALE IN FEET
0 2.5 5 10

A
ST6

SECTION A

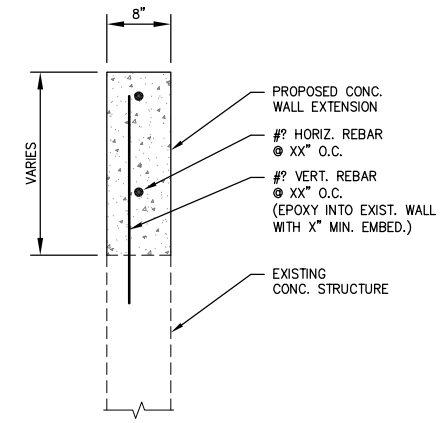

SCALE IN FEET
0 .5 1 2

1
ST6

WALL EXTENSION REINFORCING

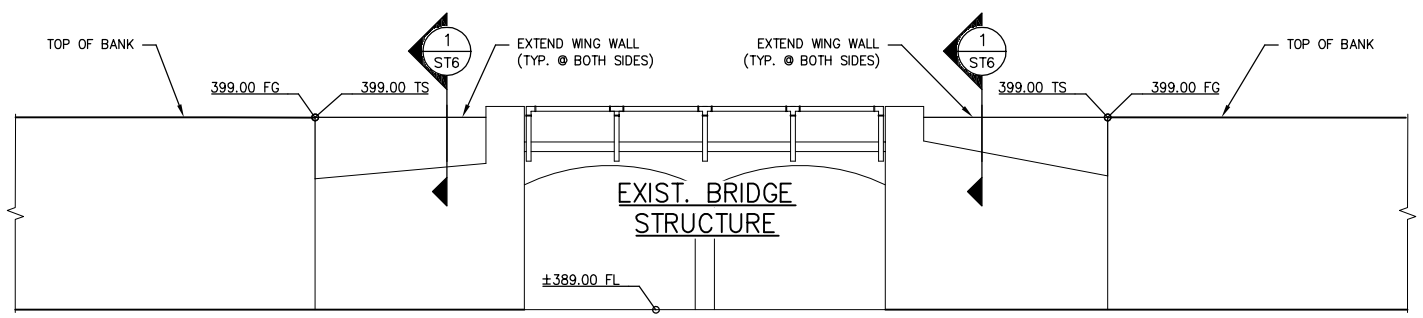

SCALE IN FEET
0 2.5 5 10

B
ST6

SECTION B

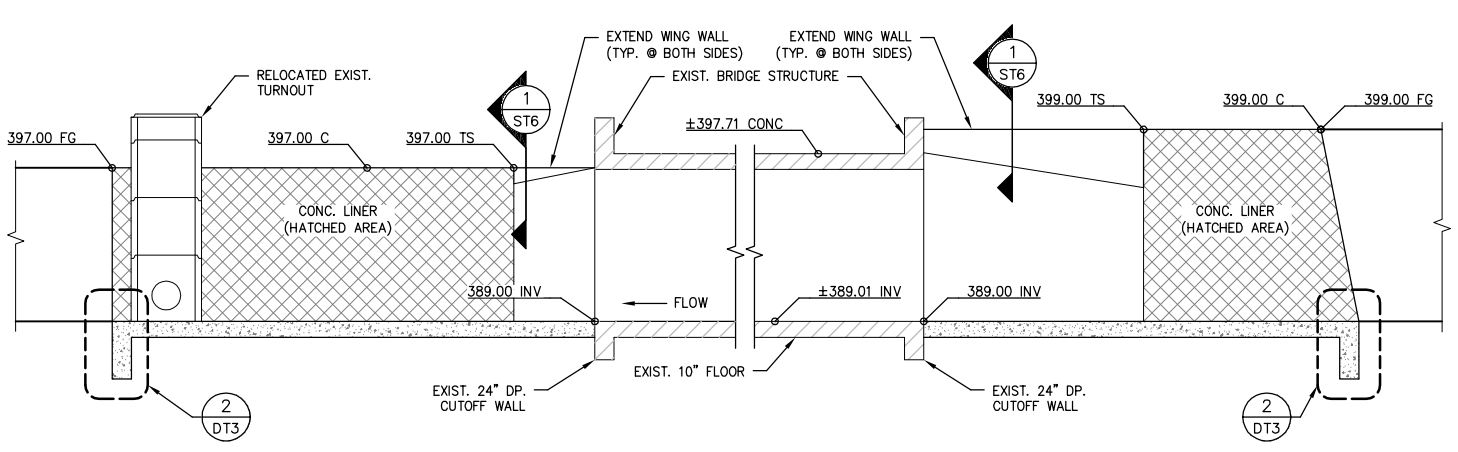

SCALE IN FEET
0 2.5 5 10

C
ST6

SECTION C

COPYRIGHT 2009 by PROVOST & PRITCHARD
ALL RIGHTS RESERVED
The firm of Provost & Pritchard Engineering Group, Inc. expressly reserves its common law copyright and other property rights in these plans. These plans are not to be reproduced, changed, or copied in any form or manner whatsoever, nor are they to be assigned to any third party without first obtaining the written permission and consent of Provost & Pritchard Engineering Group, Inc. In the event of unauthorized reuse of these plans by a third party, the third party shall hold the firm of Provost & Pritchard Engineering Group, Inc. harmless, and shall defend and indemnify Provost & Pritchard Engineering Group, Inc.'s legal fees associated with defending and enforcing these rights.

PRELIMINARY
NOT FOR CONSTRUCTION
09/28/2009

No.	REVISION	BY	DATE

REGISTERED PROFESSIONAL ENGINEER
DENNIS R. MILLS
No. 67478
EXPIRES: 6/30/11
Civil
STATE OF CALIFORNIA

DATE SIGNED: _____

TULE RIVER INTERTIE PROJECT
LOWER TULE RIVER IRRIGATION DISTRICT
TULARE COUNTY, CA

ROAD 208 CROSSING 2

EST. 1968
PROVOST & PRITCHARD
ENGINEERING GROUP
An Employee Owned Company
130 NORTH GARDEN ST.
VISALIA, CALIFORNIA 93291-6362
559/636-1166 FAX 559/636-1177
www.ppeng.com

DESIGN ENGINEER: DENNIS MILLS	
LICENSE NO: CE 67,478	
DRAFTED BY: JAB	CHECKED BY: DRM
SCALE: AS SHOWN	
DATE: 9/22/09	
JOB NO: 14770BV1	
DWG. NO:	
SHEET ST6 OF 63	

10/20/2009 1:32 PM V:\Clients\LTRID - 1477\14770TV1-Tule Intertie\dwg\SHEET\20160501-DT-05-ROAD208-02.dwg -Mike A. Porter

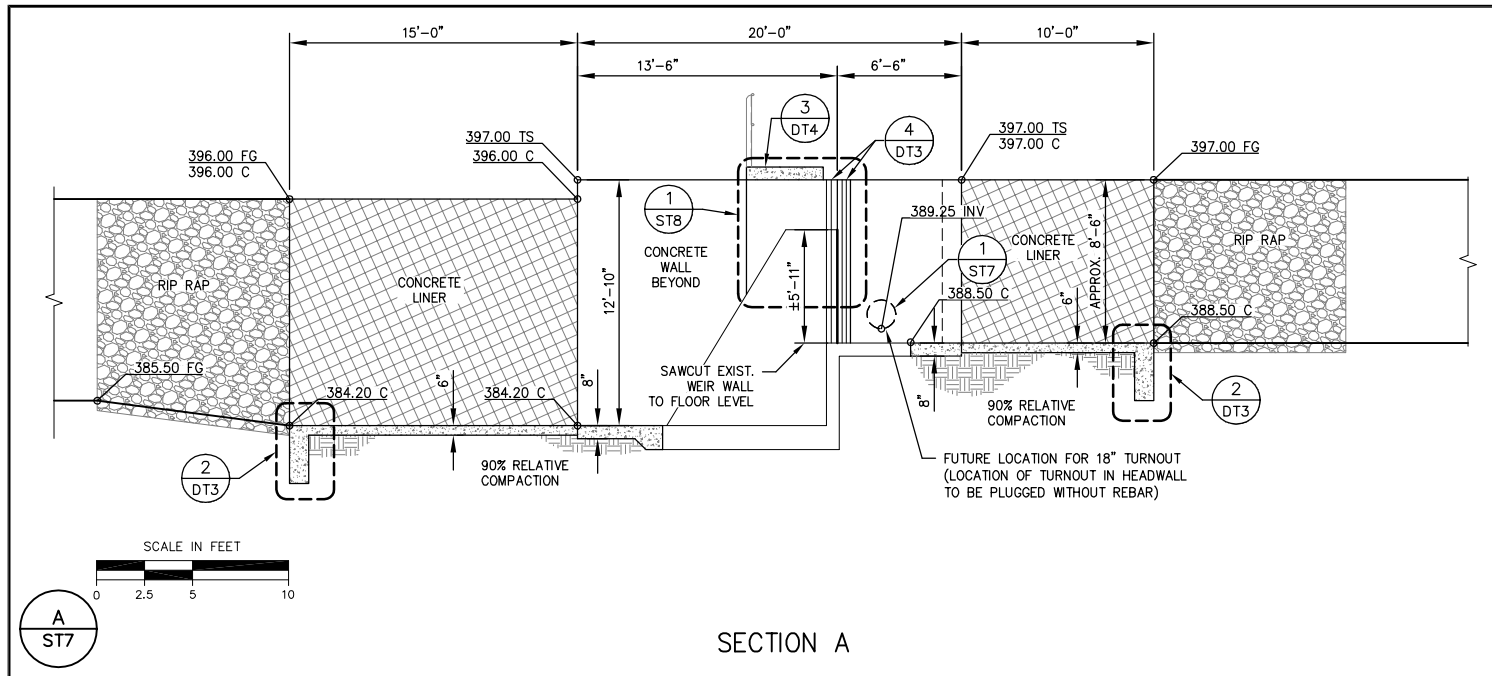

A ST7

SECTION A

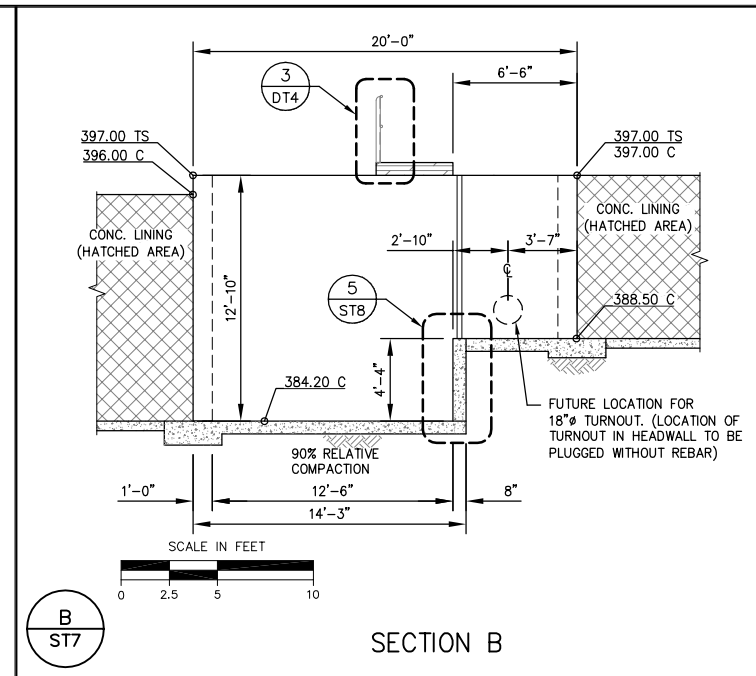

B ST7

SECTION B

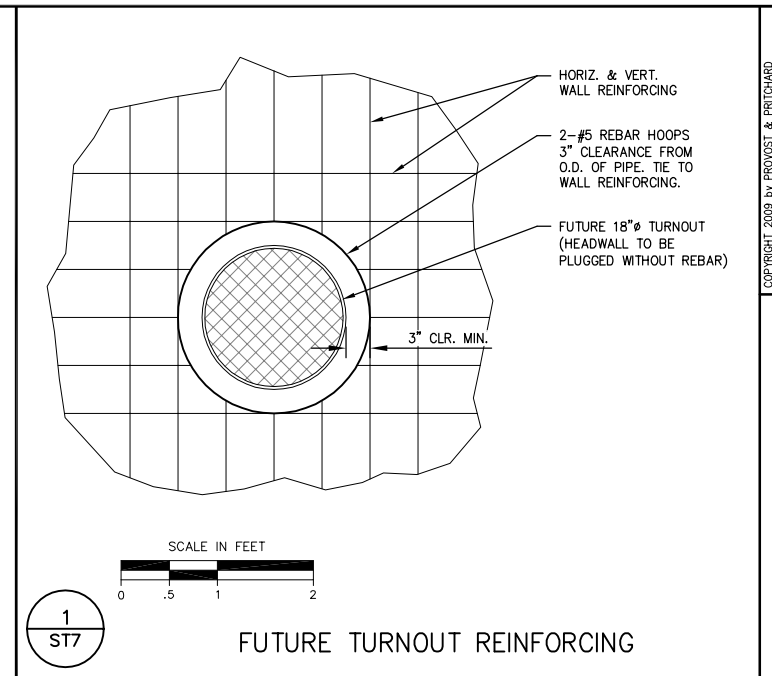

1 ST7

FUTURE TURNOUT REINFORCING

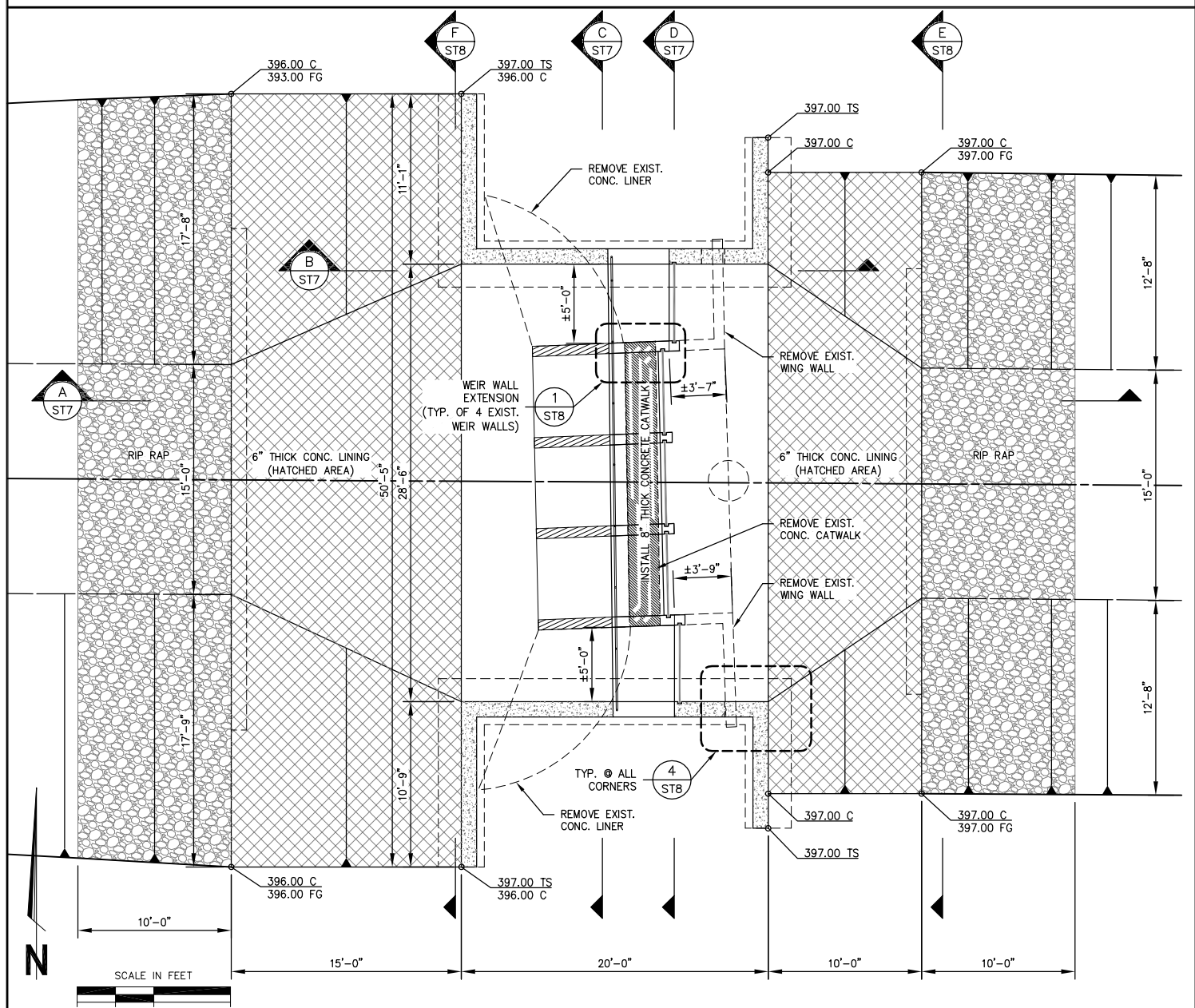

PLN ST7

PLAN VIEW

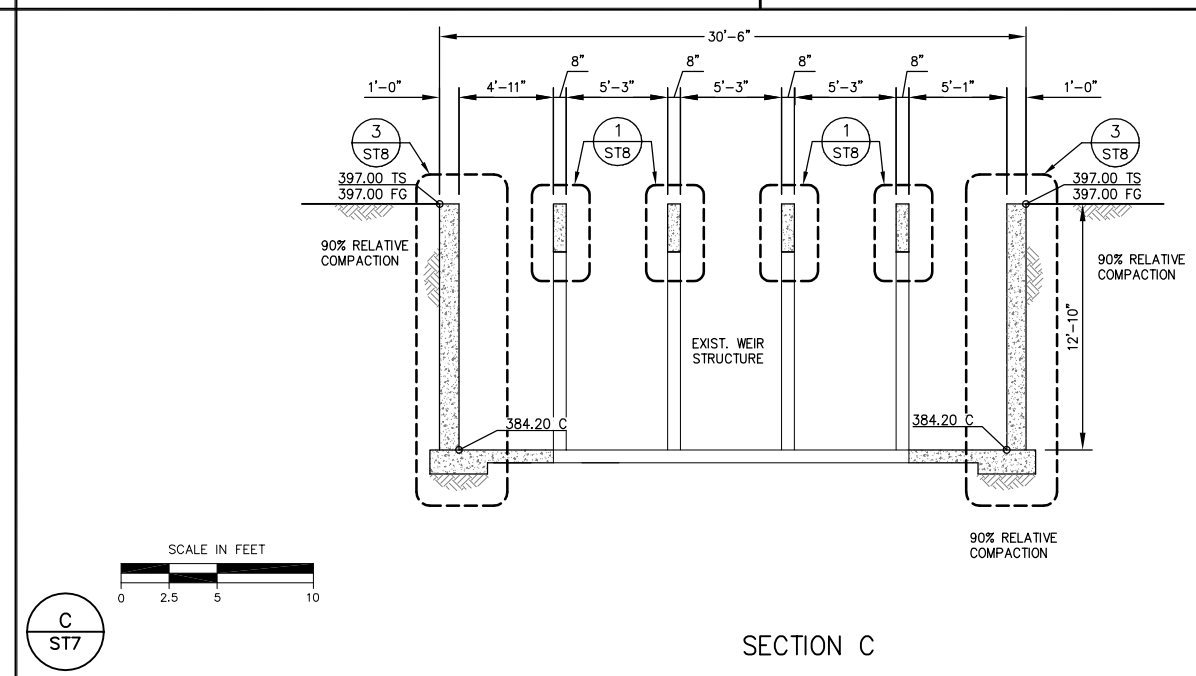

C ST7

SECTION C

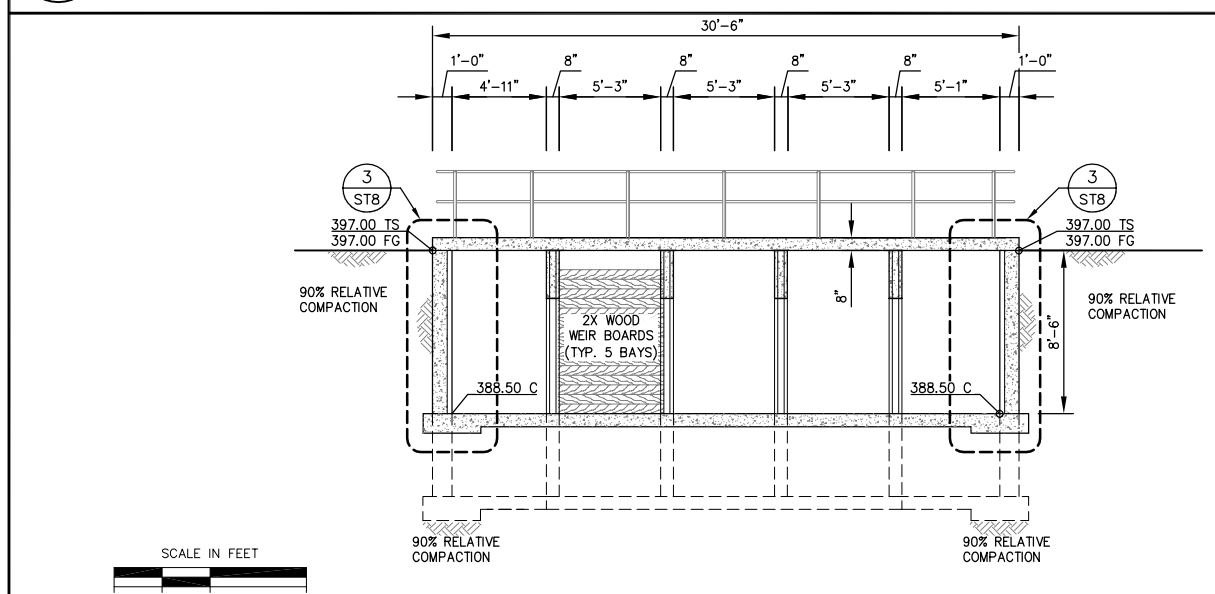

D ST7

SECTION D

COPYRIGHT 2008 by PROVOST & PRITCHARD ENGINEERING GROUP, INC. ALL RIGHTS RESERVED. The firm of Provost & Pritchard Engineering Group, Inc. expressly reserves its common law copyright and other property rights in these plans. These plans are not to be reproduced, changed, or copied in any form or manner whatsoever, nor are they to be assigned to any third party without first obtaining the written permission and consent of Provost & Pritchard Engineering Group, Inc. In the event of unauthorized reuse of these plans by a third party, the third party shall hold the firm of Provost & Pritchard Engineering Group, Inc. harmless, and shall reimburse Provost & Pritchard Engineering Group, Inc.'s legal fees associated with defending and enforcing these rights.

No.	REVISION	BY	DATE

REGISTERED PROFESSIONAL ENGINEER DENNIS R. MILLS No. 67478 EXPIRES: 6/30/11 Civil STATE OF CALIFORNIA

DATE SIGNED:

TULE RIVER INTERTIE PROJECT

LOWER TULE RIVER IRRIGATION DISTRICT
TULARE COUNTY, CA

WEIR STRUCTURE MODIFICATIONS 1

EST. 1965
PROVOST & PRITCHARD
ENGINEERING GROUP
An Employee Owned Company
130 NORTH GARDEN ST.
VISALIA, CALIFORNIA 93291-6362
559/636-1166 FAX 559/636-1177
www.ppeng.com

DESIGN ENGINEER: DENNIS MILLS	
LICENSE NO: CE 67,478	
DRAFTED BY: JAB	CHECKED BY: DRM
SCALE:	
DATE: 9/22/09	
JOB NO: 147708V1	
DWG. NO:	
SHEET ST7 OF 63	

10/20/2009 1:35 PM V:\Clients\LTRID - 1477\147707V1-Tule Intertie\dwg\SHEET\20160501-DT-06-WEIR-01.dwg -Mike A. Porter

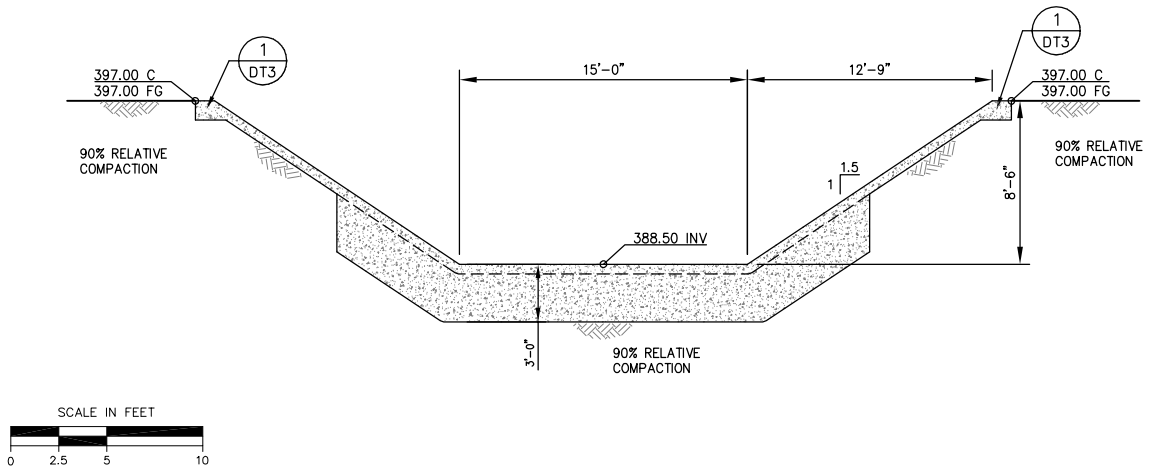

E / ST8

SECTION E

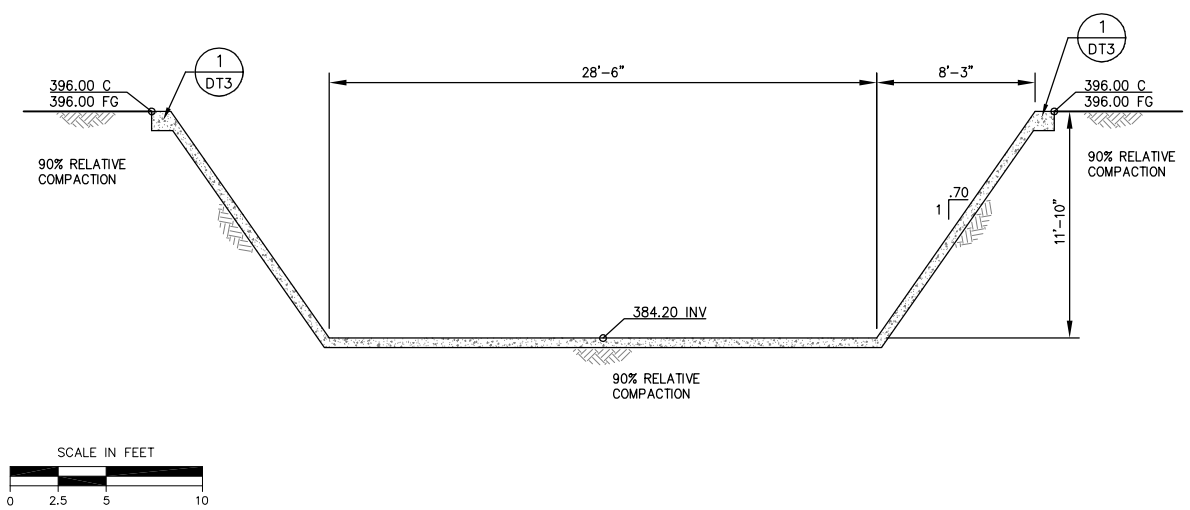

F / ST8

SECTION F

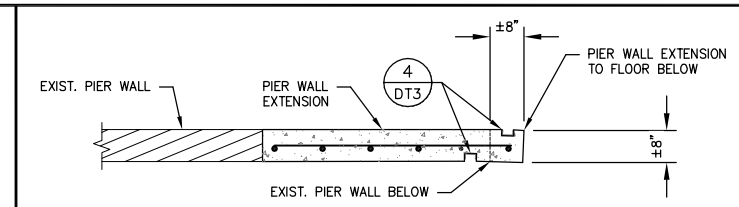

SECTION A–A

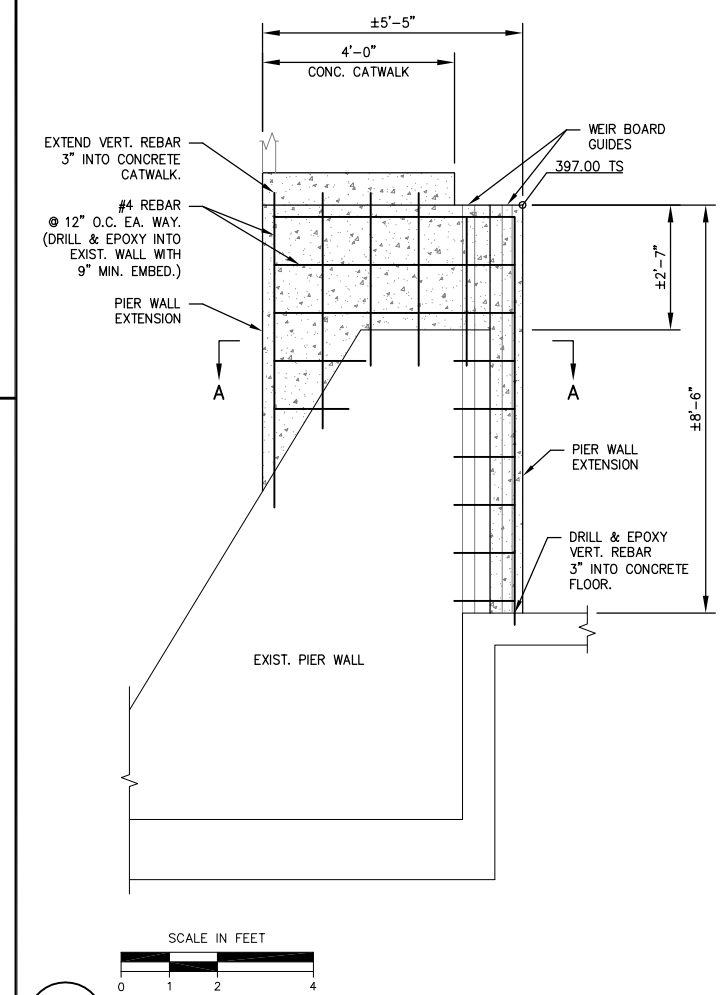

1 / ST8

PIER WALL EXTENSION

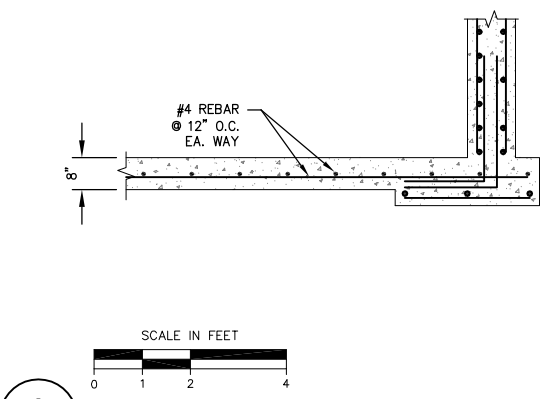

2 / ST8

CONC. SLAB REINFORCING

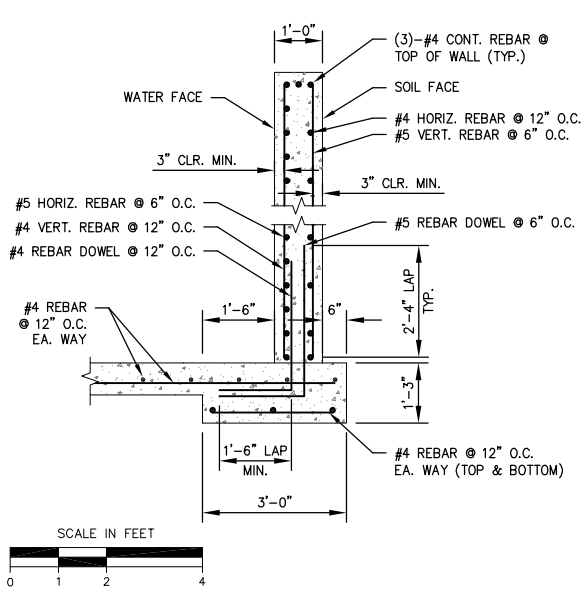

3 / ST8

12" WALL REINFORCING

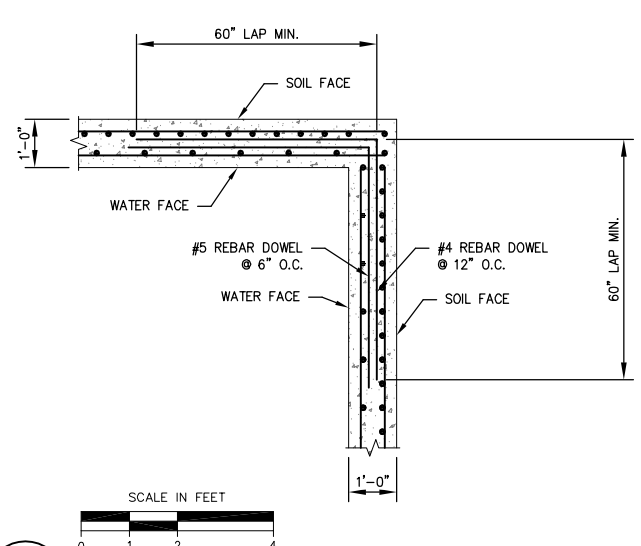

4 / ST8

12" WALL CORNER REINFORCING

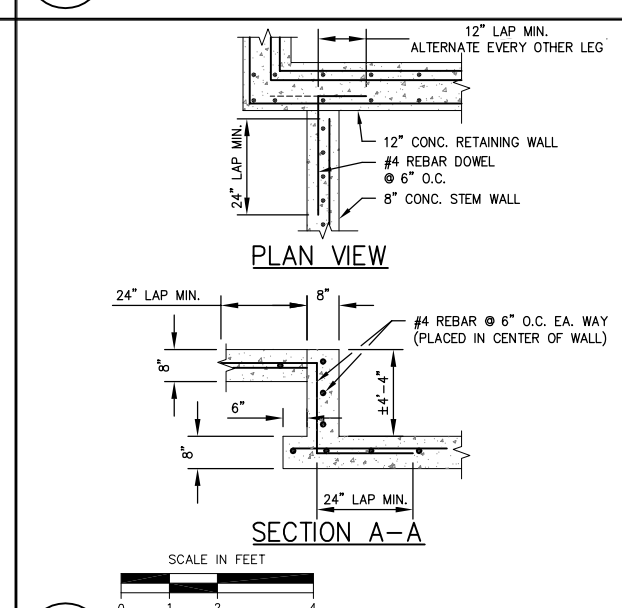

5 / ST8

STEM WALL REINFORCING

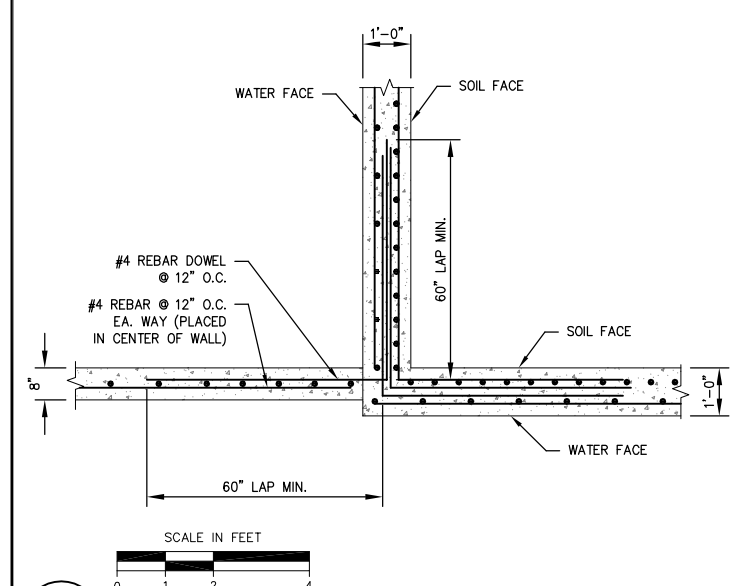

6 / ST8

12" WALL–8" STEM WALL REINFORCING

COPYRIGHT 2003 by PROVOST & PRITCHARD
ALL RIGHTS RESERVED
The firm of Provost & Pritchard Engineering Group, Inc. expressly reserves its common law copyright and other property rights in these plans. These plans are not to be reproduced, changed, or copied in any form or manner whatsoever, nor are they to be assigned to any third party without first obtaining the written permission and consent of Provost & Pritchard Engineering Group, Inc. In the event of unauthorized reuse of these plans by a third party, the third party shall hold the firm of Provost & Pritchard Engineering Group, Inc. harmless, and shall defend and indemnify the firm of Provost & Pritchard Engineering Group, Inc.'s legal fees associated with defending and enforcing these rights.

PRELIMINARY
NOT FOR CONSTRUCTION
09/28/2009

No.	REVISION	BY	DATE

REGISTERED PROFESSIONAL ENGINEER
DENNIS R. MILLS
No. 67478
EXPIRES: 6/30/11
Civil
STATE OF CALIFORNIA

DATE SIGNED: _____

TULE RIVER INTERTIE PROJECT
LOWER TULE RIVER IRRIGATION DISTRICT
TULARE COUNTY, CA

WEIR STRUCTURE MODIFICATIONS 2

PROVOST & PRITCHARD
EST. 1963
ENGINEERING & GROUP
An Employee Owned Company
130 NORTH GARDEN ST.
VISALIA, CALIFORNIA 93291-6362
559/636-1166 FAX 559/636-1177
www.ppeng.com

DESIGN ENGINEER: DENNIS MILLS
LICENSE NO: CE 67,478
DRAFTED BY: JAB
CHECKED BY: DRM
SCALE:
DATE: 9/22/09
JOB NO: 147708V1
DWG. NO:
SHEET
ST8 OF 63

10/20/2009 1:35 PM V:\Clients\LTRID - 1477\147707V1-Tule Intertie\dwg\SHEET\20160501-DT-06-WEIR-02.dwg -Mike A. Porter

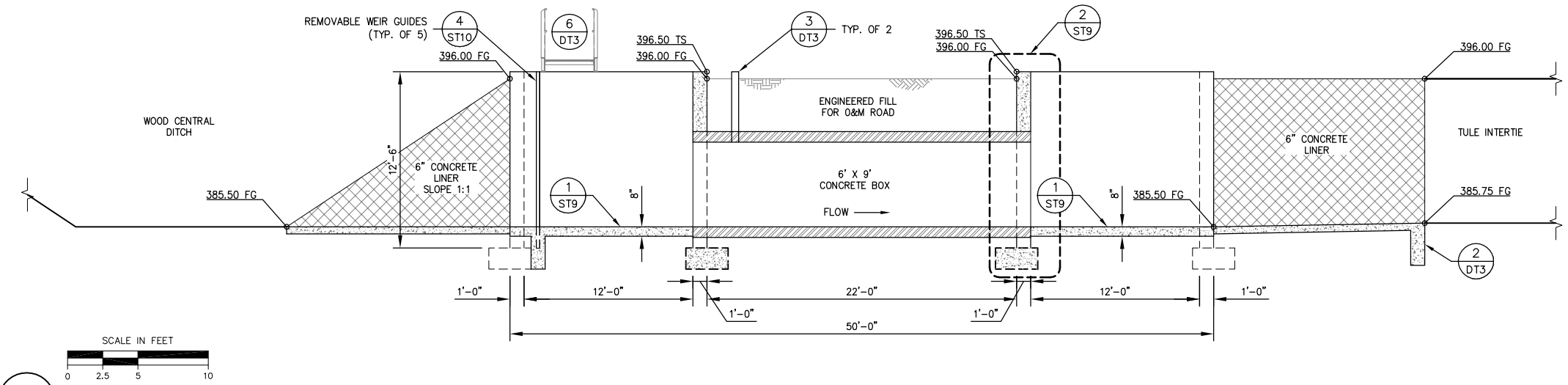

A ST9

SECTION A

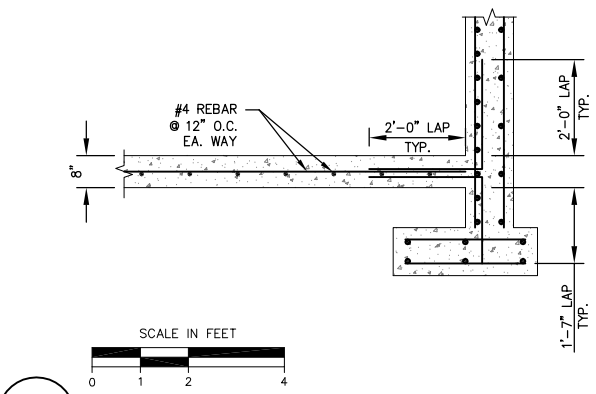

1 ST9

CONC. SLAB REINFORCING

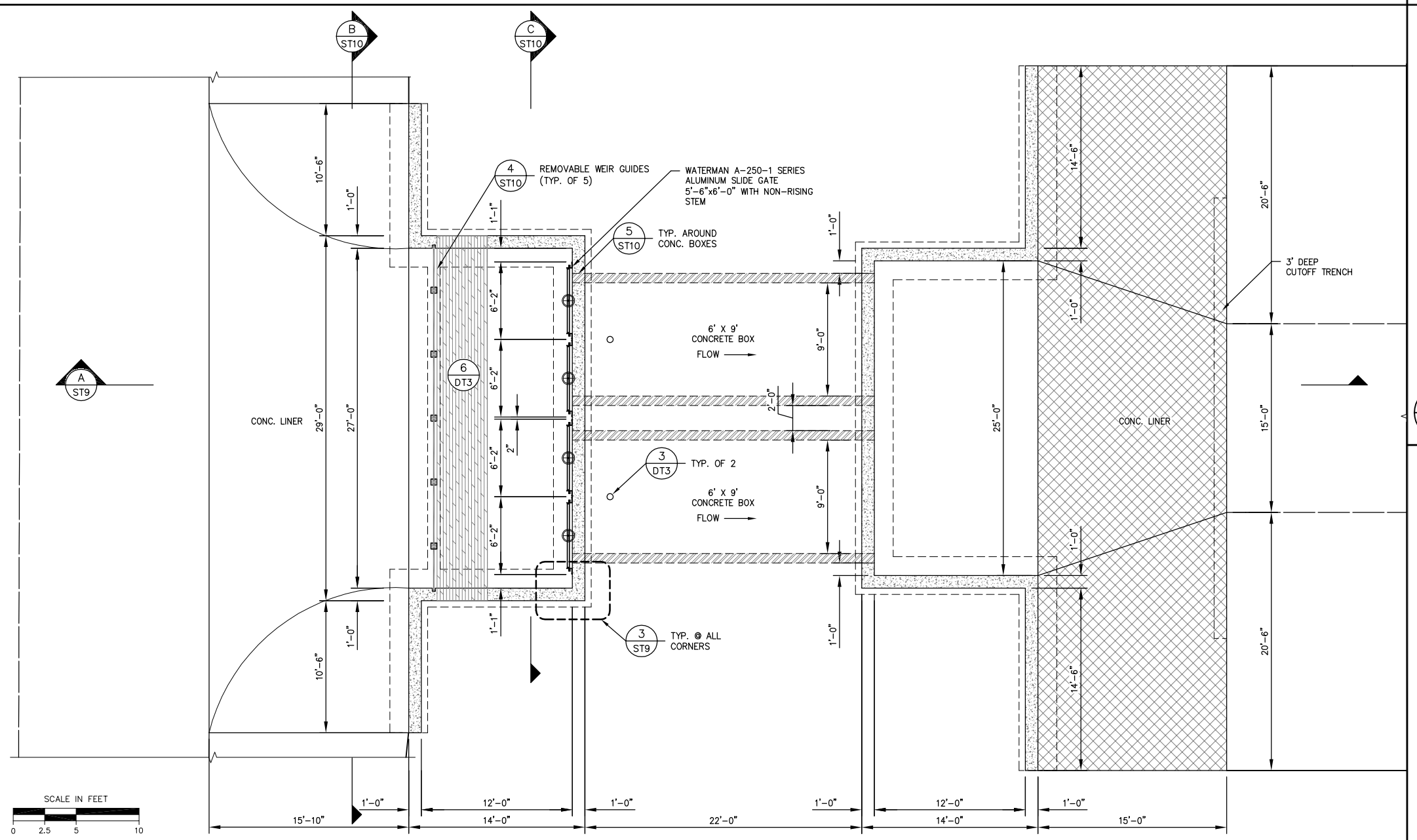

PLN ST9

PLAN VIEW

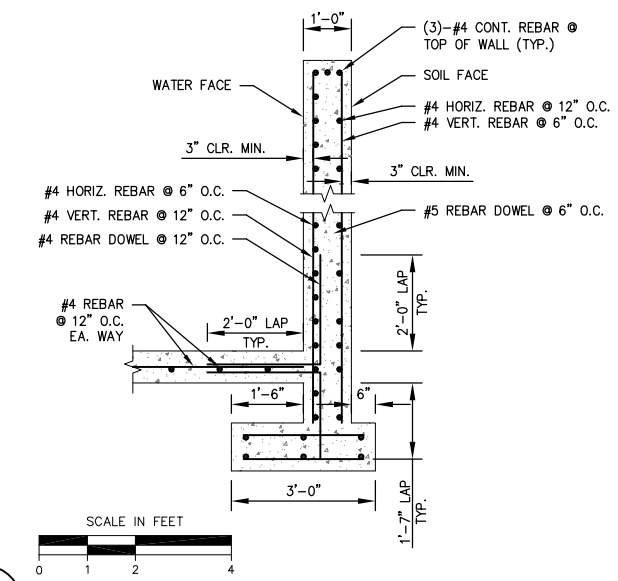

2 ST9

12" WALL REINFORCING

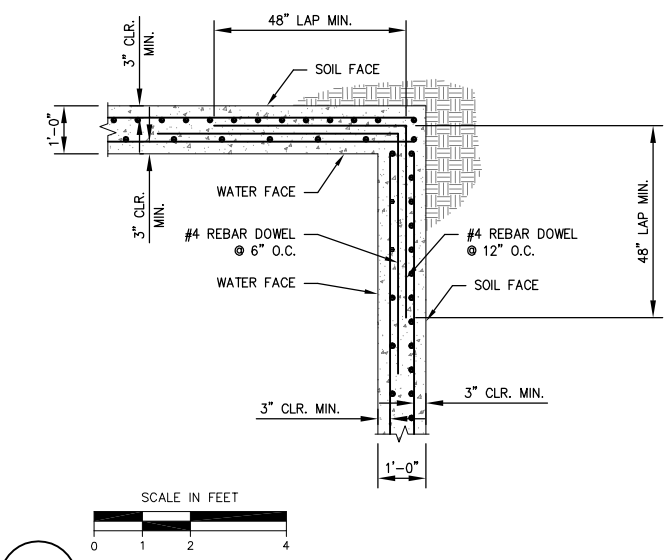

3 ST9

12" WALL CORNER REINFORCING

COPYRIGHT 2008 by PROVOST & PRITCHARD
ALL RIGHTS RESERVED
The firm of Provost & Pritchard Engineering Group, Inc. expressly reserves its common law copyright and other property rights in these plans. These plans are not to be reproduced, changed, or copied in any form or manner whatsoever, nor are they to be assigned to any third party without first obtaining the written permission and consent of Provost & Pritchard Engineering Group, Inc. In the event of unauthorized reuse of these plans by a third party, the third party shall hold the firm of Provost & Pritchard Engineering Group, Inc. harmless, and shall indemnify the firm of Provost & Pritchard Engineering Group, Inc.'s legal fees associated with defending and enforcing these rights.

No.	REVISION	BY	DATE

PRELIMINARY
NOT FOR CONSTRUCTION
09/28/2009

REGISTERED PROFESSIONAL ENGINEER
DENNIS R. MILLS
No. 67478
EXPIRES: 6/30/11
Civil
STATE OF CALIFORNIA

DATE SIGNED:

TULE RIVER INTERTIE PROJECT
LOWER TULE RIVER IRRIGATION DISTRICT
TULARE COUNTY, CA

WOODS CENTRAL TURNOUT 1

ESTD. 1964
PROVOST & PRITCHARD
ENGINEERING GROUP
An Employee Owned Company
130 NORTH GARDEN ST.
VISALIA, CALIFORNIA 93291-6362
559/636-1166 FAX 559/636-1177
www.ppeng.com

DESIGN ENGINEER: DENNIS MILLS	
LICENSE NO: CE 67,478	
DRAFTED BY: JAB	CHECKED BY: DRM
SCALE: AS SHOWN	
DATE: 9/22/09	
JOB NO: 147708V1	
DWG. NO:	
SHEET ST9 OF 63	

10/20/2009 1:36 PM V:\Clients\TRID - 1477\147707V1-Tule Intertie\dwg\SHEET\20160501-DT-WOODS CENTRAL TURNOUT-01.dwg -Mike A. Porter

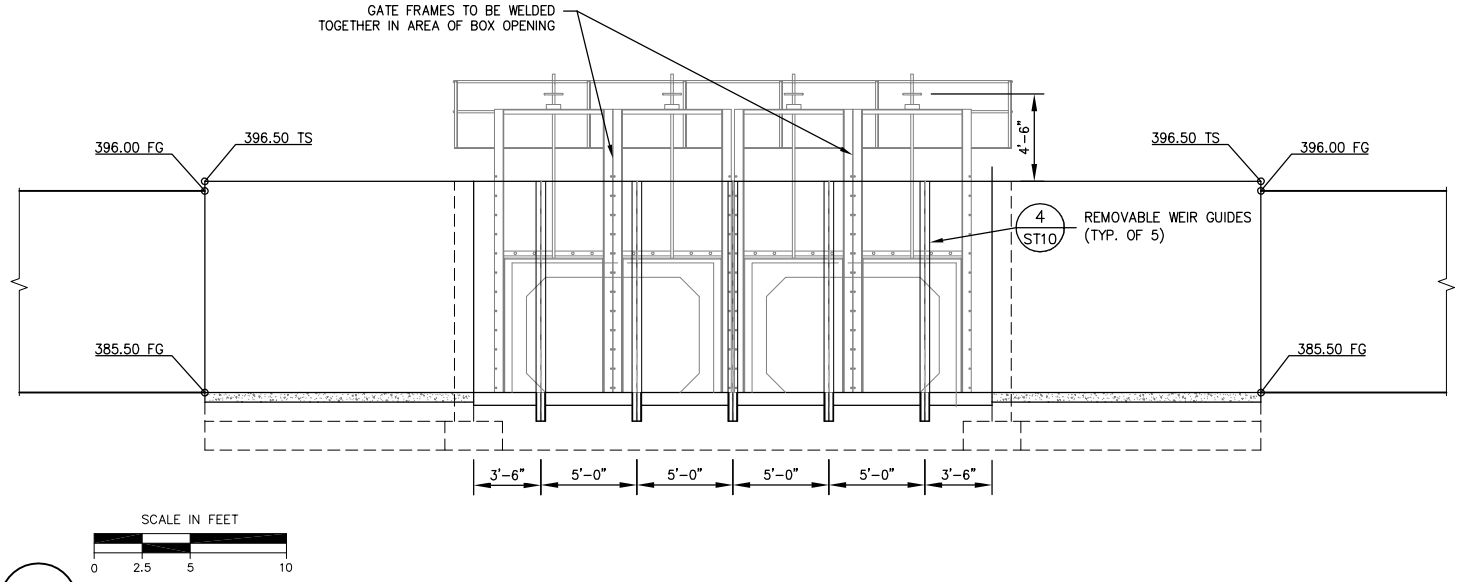

B ST10

SECTION B

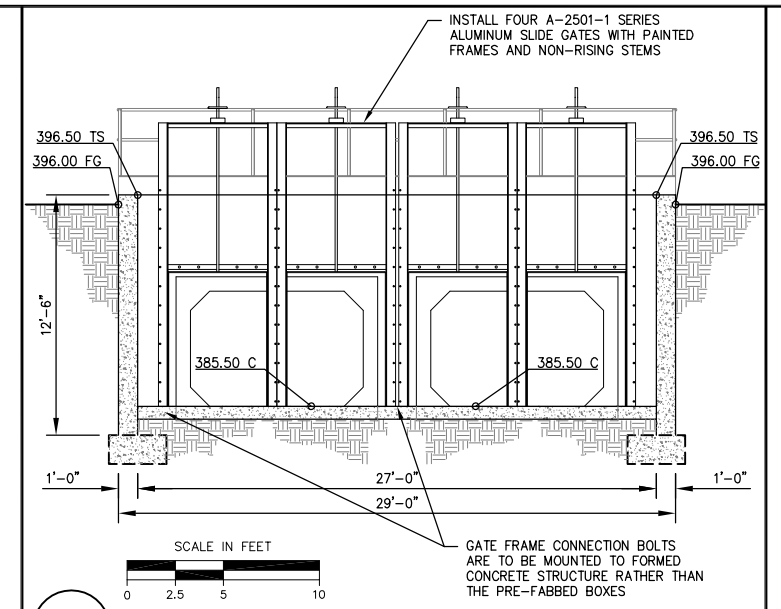

C ST10

SECTION C

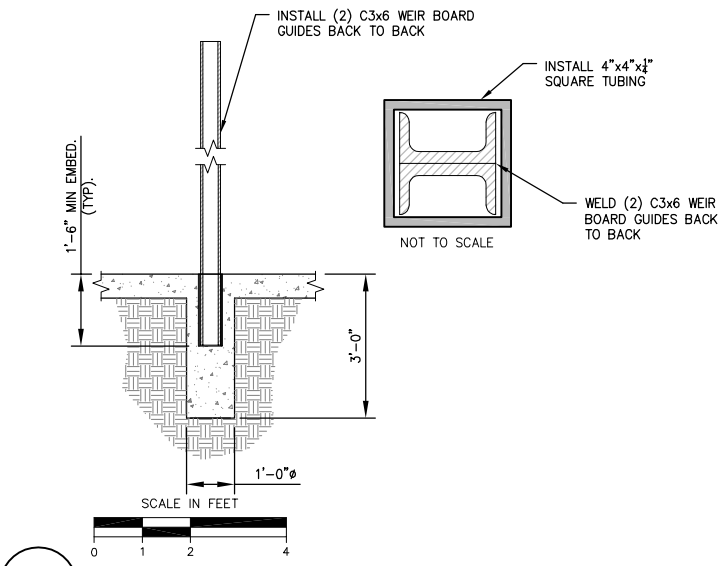

4 ST10

REMOVABLE WEIR BOARD GUIDES

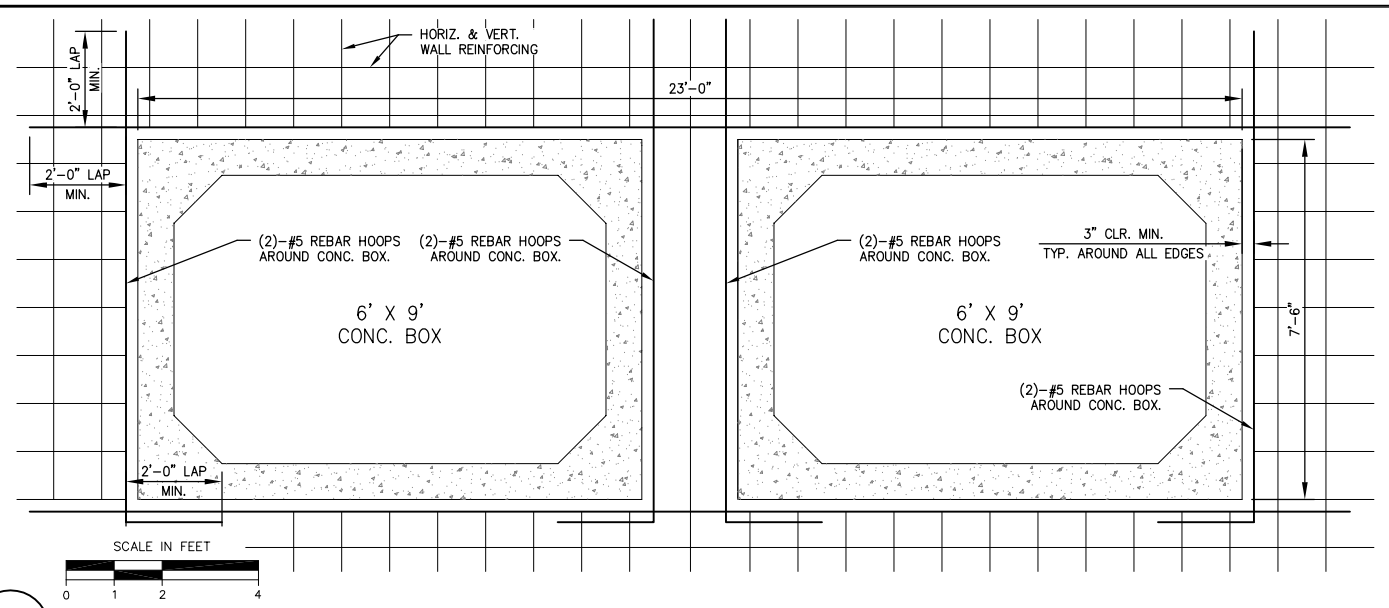

5 ST10

6' X 9' CONCRETE BOX OPENING REINFORCING

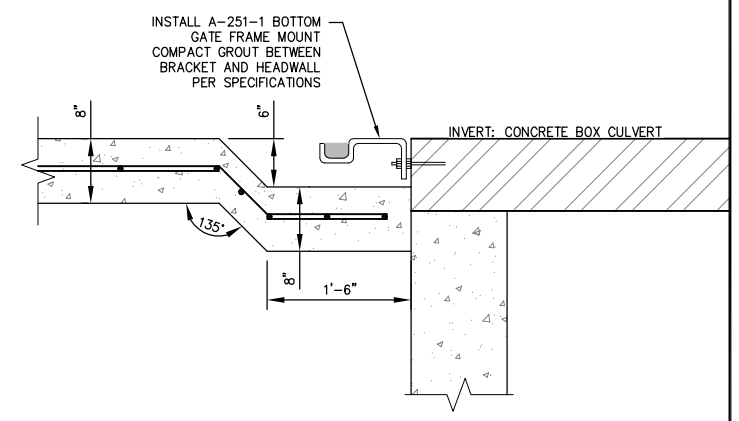

BOTTOM GATE BRACKET DETAIL

COPYRIGHT 2009 by PROVOST & PRITCHARD ALL RIGHTS RESERVED
The firm of Provost & Pritchard Engineering Group, Inc. expressly reserves its common law copyright and other property rights in these plans. These plans are not to be reproduced, changed, or copied in any form or manner whatsoever, nor are they to be assigned to any third party without first obtaining the written permission and consent of Provost & Pritchard Engineering Group, Inc. In the event of unauthorized reuse of these plans by a third party, the third party shall hold the firm of Provost & Pritchard Engineering Group, Inc. harmless, and shall defend and indemnify the firm of Provost & Pritchard Engineering Group, Inc.'s legal fees associated with defending and enforcing these rights.

PRELIMINARY
NOT FOR CONSTRUCTION
09/28/2009

No.	REVISION	BY	DATE

REGISTERED PROFESSIONAL ENGINEER
DENNIS R. MILLS
No. 67478
EXPIRES: 6/30/11
Civil
STATE OF CALIFORNIA

DATE SIGNED: _____

TULE RIVER INTERTIE PROJECT

LOWER TULE RIVER IRRIGATION DISTRICT
TULARE COUNTY, CA

WOODS CENTRAL TURNOUT 2

PROVOST & PRITCHARD
ESTD. 1964
ENGINEERING & GROUP
An Employee Owned Company
130 NORTH GARDEN ST.
VISALIA, CALIFORNIA 93291-6362
559/636-1166 FAX 559/636-1177
www.ppeng.com

DESIGN ENGINEER: DENNIS MILLS
LICENSE NO: CE 67,478
DRAFTED BY: JAB | CHECKED BY: DRM
SCALE: AS SHOWN
DATE: 9/22/09
JOB NO: 147708V1
DWG. NO:
SHEET
ST10 OF 63

10/20/2009 1:36 PM V:\Clients\LTRID - 1477\147707V1-Tule Intertie\dwg\SHEET\20160501-DT-WOODS CENTRALTURNOUT-02.dwg -Mike A. Porter

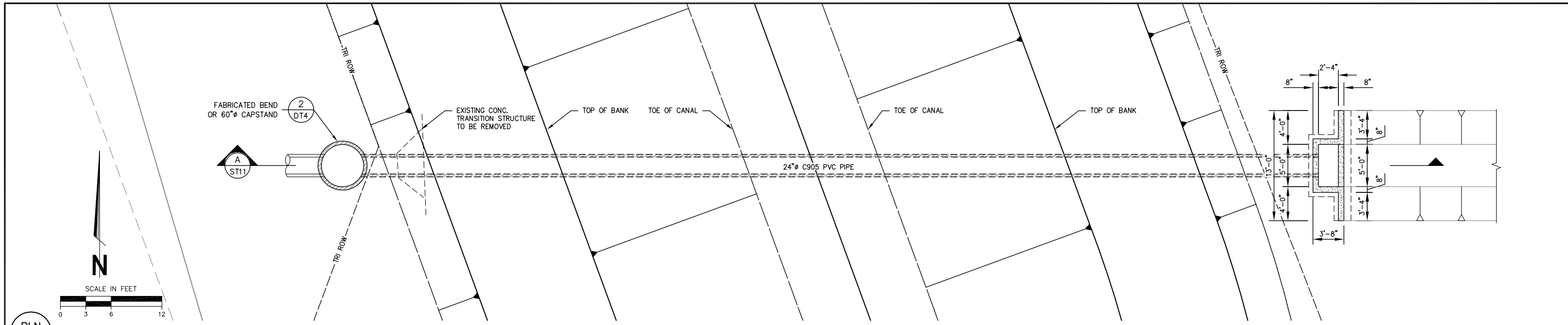

PLN ST11

PLAN VIEW

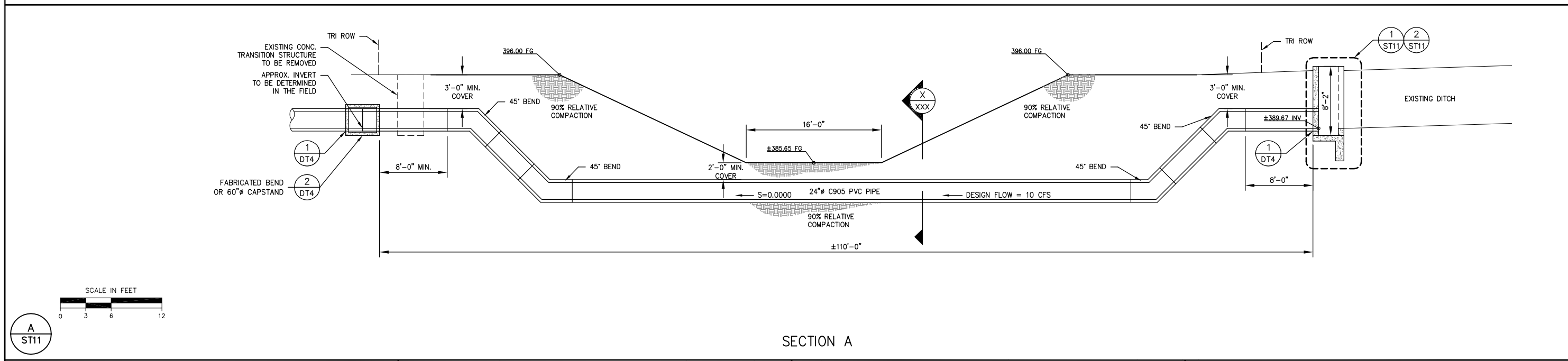

A ST11

SECTION A

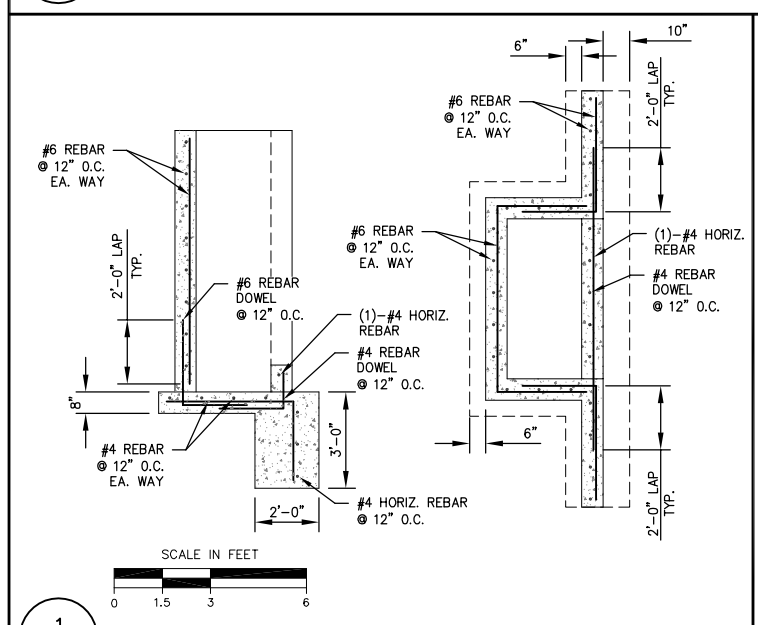

1 ST11

8" CONC. WALL REINFORCING

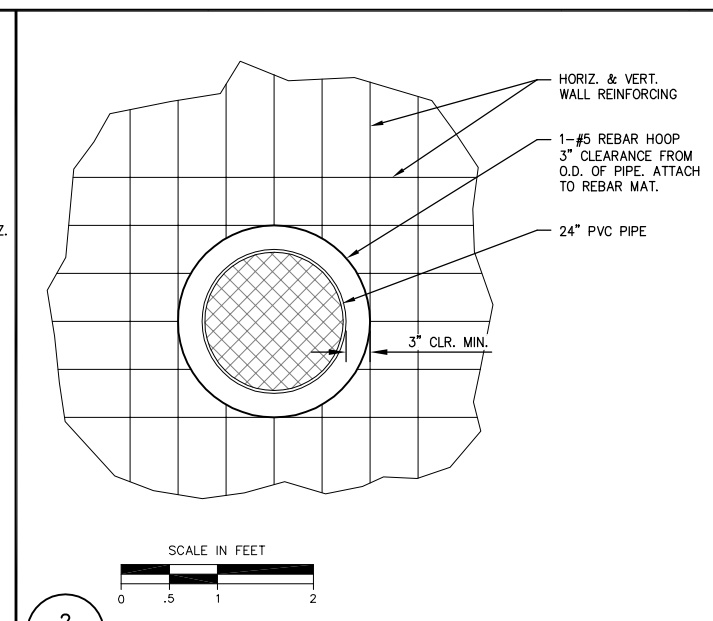

2 ST11

24"ø PIPE REINFORCING

APPROVALS

MR. BURNS — DATE
RHODES–FINE DELIVERY

MR. SEAN GEIVET — DATE
PORTERVILLE ID GENERAL MANAGER

COPYRIGHT 2008 by PROVOST & PRITCHARD
ALL RIGHTS RESERVED
The firm of Provost & Pritchard Engineering Group, Inc. expressly reserves its common law copyright and other property rights in these plans. These plans are not to be reproduced, changed, or copied in any form or manner whatsoever, nor are they to be assigned to any third party without first obtaining the written permission and consent of Provost & Pritchard Engineering Group, Inc. In the event of unauthorized reuse of these plans by a third party, the third party shall hold the firm of Provost & Pritchard Engineering Group, Inc. harmless, and shall defend and indemnify Provost & Pritchard Engineering Group, Inc.'s legal fees associated with defending and enforcing these rights.

No.	REVISION	BY	DATE

PRELIMINARY
NOT FOR CONSTRUCTION
09/28/2009

TULE RIVER INTERTIE PROJECT
LOWER TULE RIVER IRRIGATION DISTRICT
TULARE COUNTY, CA

RHODES–FINE TURNOUT 1

EST. 1962
PROVOST & PRITCHARD
ENGINEERING GROUP
An Employee Owned Company
130 NORTH GARDEN ST.
VISALIA, CALIFORNIA 93291-6362
559/636-1166 FAX 559/636-1177
www.ppeng.com

DESIGN ENGINEER: DENNIS MILLS
LICENSE NO: CE 67,478
DRAFTED BY: JAB
CHECKED BY: DRM
SCALE:
DATE: 9/22/09
JOB NO: 147708V1
DWG. NO:
SHEET
ST11 OF 63

10/20/2009 1:36 PM V:\Clients\LTRID - 1477\147707V1-Tule Intertie\dwg\SHEET\20160501-DT-RHODES-FINE TURNOUT-1.dwg -Mike A. Porter

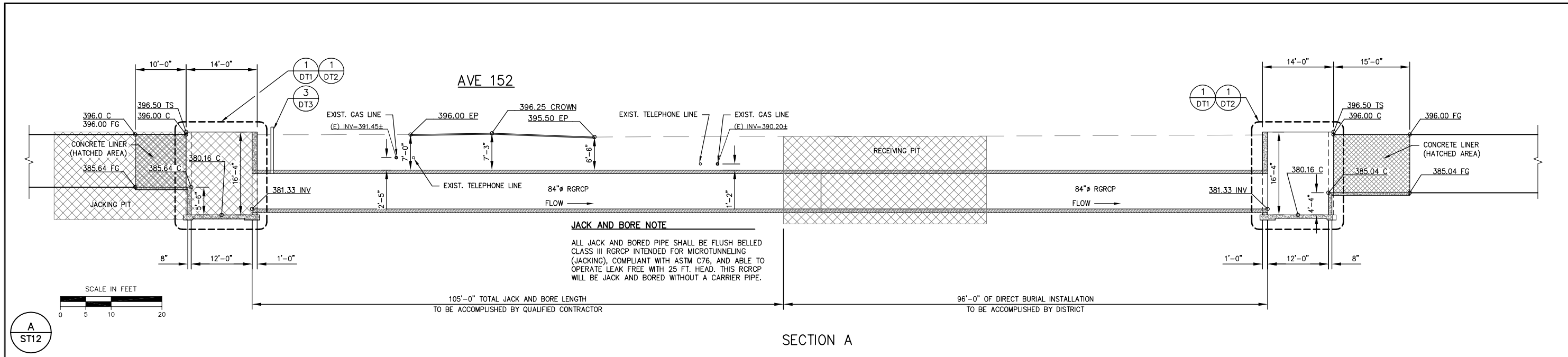

JACK AND BORE NOTE

ALL JACK AND BORED PIPE SHALL BE FLUSH BELLED CLASS III RGRCP INTENDED FOR MICROTUNNELING (JACKING), COMPLIANT WITH ASTM C76, AND ABLE TO OPERATE LEAK FREE WITH 25 FT. HEAD. THIS RCRCP WILL BE JACK AND BORED WITHOUT A CARRIER PIPE.

SECTION A

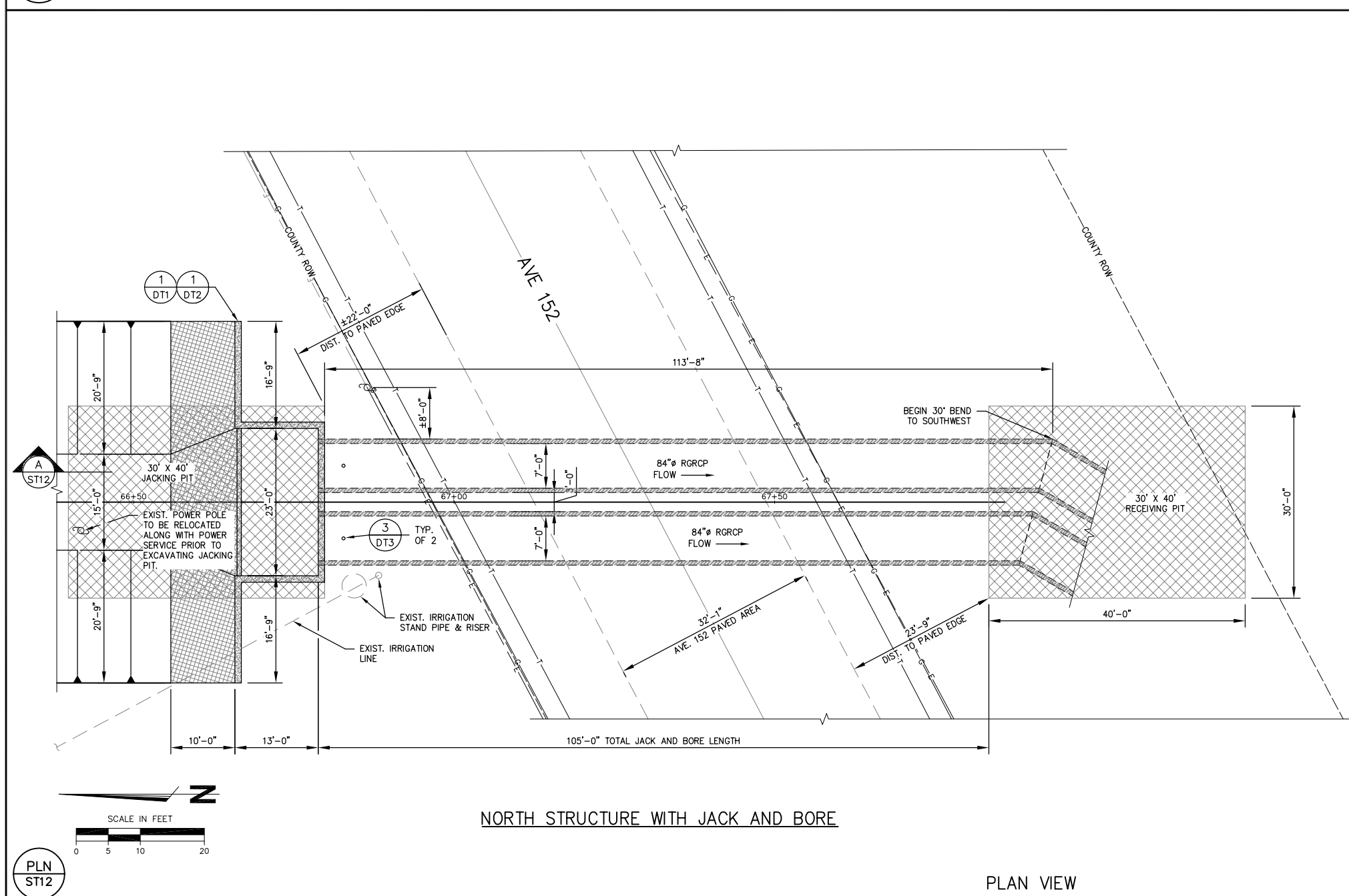

NORTH STRUCTURE WITH JACK AND BORE

PLAN VIEW

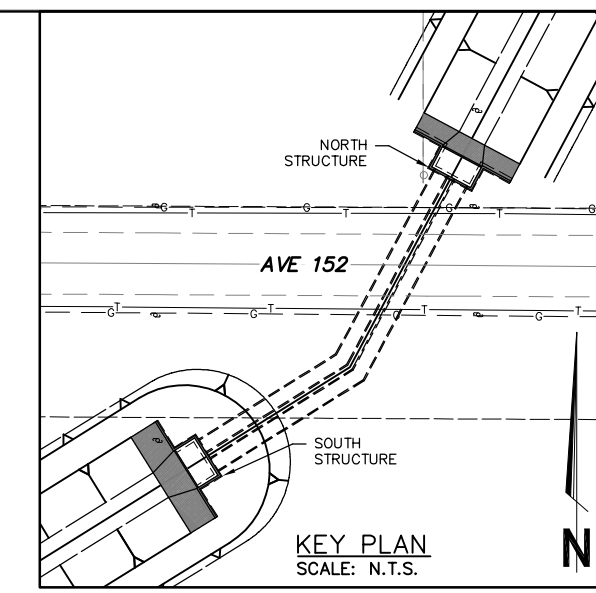

KEY PLAN
SCALE: N.T.S.

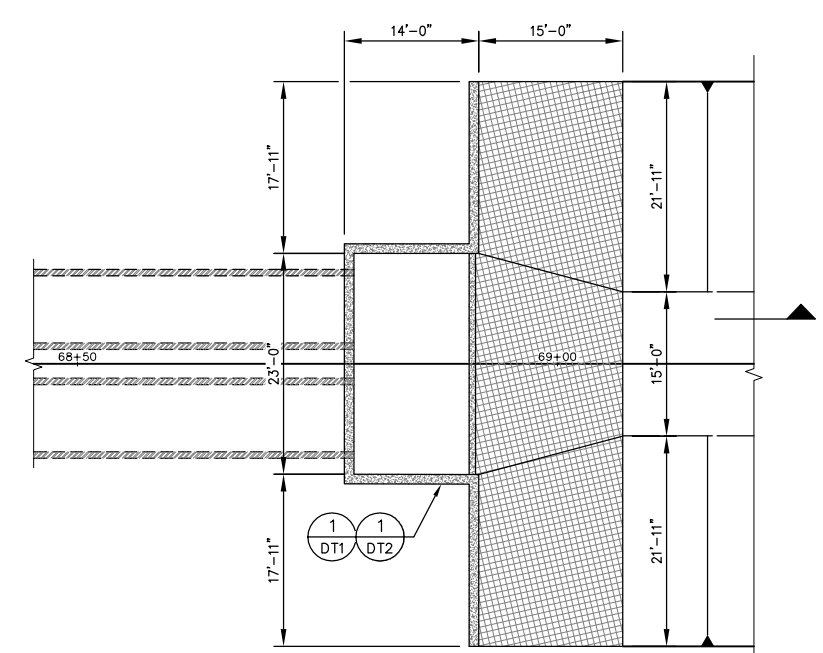

SOUTH STRUCTURE

COPYRIGHT 2008 by PROVOST & PRITCHARD
ALL RIGHTS RESERVED
The firm of Provost & Pritchard Engineering Group, Inc. expressly reserves its common law copyright and other property rights in these plans. These plans are not to be reproduced, changed, or copied in any form or manner whatsoever, nor are they to be assigned to any third party without first obtaining the written permission and consent of Provost & Pritchard Engineering Group, Inc. In the event of unauthorized reuse of these plans by a third party, the third party shall hold the firm of Provost & Pritchard Engineering Group, Inc. harmless, and shall indemnify the firm of Provost & Pritchard Engineering Group, Inc.'s legal fees associated with defending and enforcing these rights.

PRELIMINARY
NOT FOR CONSTRUCTION
09/28/2009

No.	REVISION	BY	DATE

REGISTERED PROFESSIONAL ENGINEER
DENNIS R. MILLS
No. 67478
EXPIRES: 6/30/11
Civil
STATE OF CALIFORNIA

DATE SIGNED:

TULE RIVER INTERTIE PROJECT
LOWER TULE RIVER IRRIGATION DISTRICT
TULARE COUNTY, CA

AVE 152 CROSSING 1

EST. 1968
PROVOST & PRITCHARD
ENGINEERING GROUP
An Employee Owned Company
130 NORTH GARDEN ST.
VISALIA, CALIFORNIA 93291-6362
559/636-1166 FAX 559/636-1177
www.ppeng.com

DESIGN ENGINEER: DENNIS MILLS
LICENSE NO: CE 67,478
DRAFTED BY: JAB
CHECKED BY: DRM
SCALE: AS SHOWN
DATE: 9/22/09
JOB NO: 147708V1
DWG. NO:
SHEET
ST12 OF 63

12/21/2005 8:38:53 AM V:\Clients\LTRID - 1477\147707V1-Tule Intertie\dwg\SHEET\20160501-DT-08-AVE152-01.dwg -David

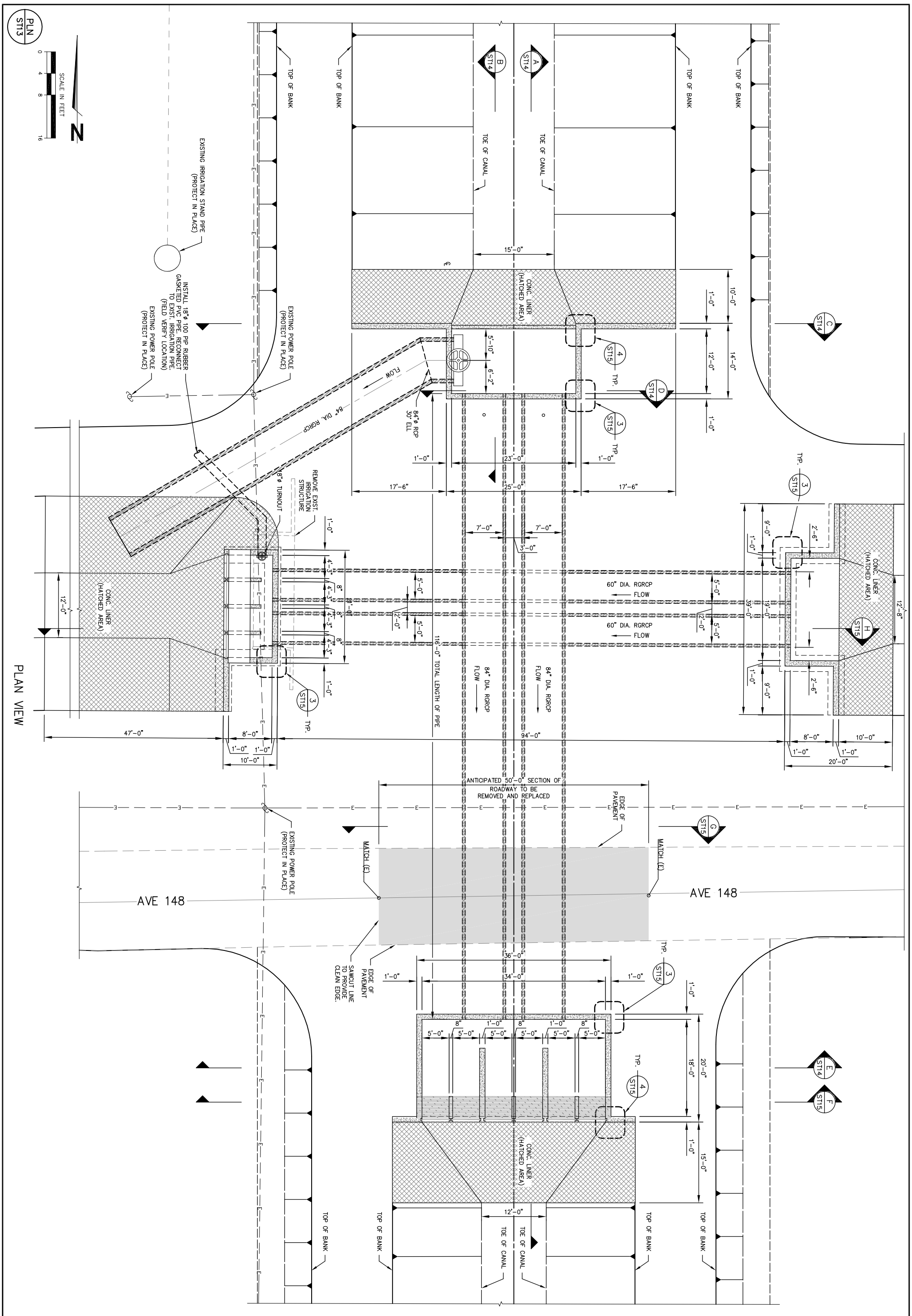

DESIGN ENGINEER: DENNIS MILLS	EST. 1968 PROVOST & PRITCHARD ENGINEERING GROUP INC. An Employee Owned Company 130 NORTH GARDEN ST. VISALIA, CALIFORNIA 93291-6362 559/636-1166 FAX 559/636-1177 www.ppeng.com	TULE RIVER INTERTIE PROJECT LOWER TULE RIVER IRRIGATION DISTRICT TULARE COUNTY, CA AVE 148 CROSSING 1	PRELIMINARY NOT FOR CONSTRUCTION 09/28/2009
LICENSE NO: CE 67,478		REGISTERED PROFESSIONAL ENGINEER DENNIS R. MILLS No. 67478 EXPIRES: 6/30/11 Civil STATE OF CALIFORNIA DATE SIGNED: _____	No. / REVISION / BY / DATE
DRAFTED BY: JAB / CHECKED BY: DRM			
SCALE: AS SHOWN			
DATE: 9/22/09			
JOB NO: 147708V1			
DWG. NO:			
SHEET ST13 OF 63			

COPYRIGHT 2009 by PROVOST & PRITCHARD ENGINEERING GROUP, INC. ALL RIGHTS RESERVED
The firm of Provost & Pritchard Engineering Group, Inc. expressly reserves its common law copyright and other applicable property rights in these plans. These plans are not to be reproduced, changed, or copied in any form or manner whatsoever, nor are they to be assigned to a third party without first obtaining the written permission and consent of Provost & Pritchard Engineering Group, Inc. In the event of unauthorized reuse of these plans by a third party, the third party shall hold the firm of Provost & Pritchard Engineering Group, Inc. harmless, and shall bear the cost of Provost & Pritchard Engineering Group, Inc.'s legal fees associated with defending and enforcing these rights.

10/20/2009 1:38 PM V:\Clients\LTRID – 1477\147707V1–Tule Intertie\dwg\SHEET\20160501–DT–09–AVE148–01.dwg –Mike A. Porter

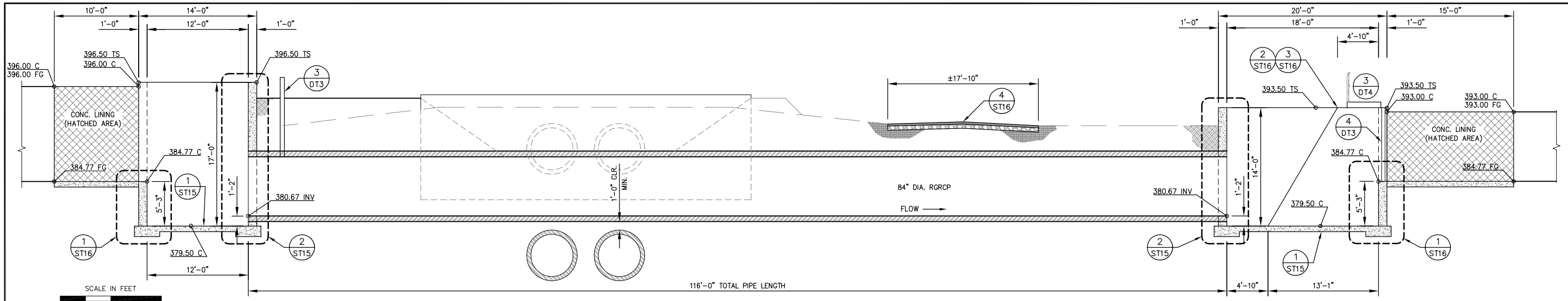

A
ST14

SECTION A

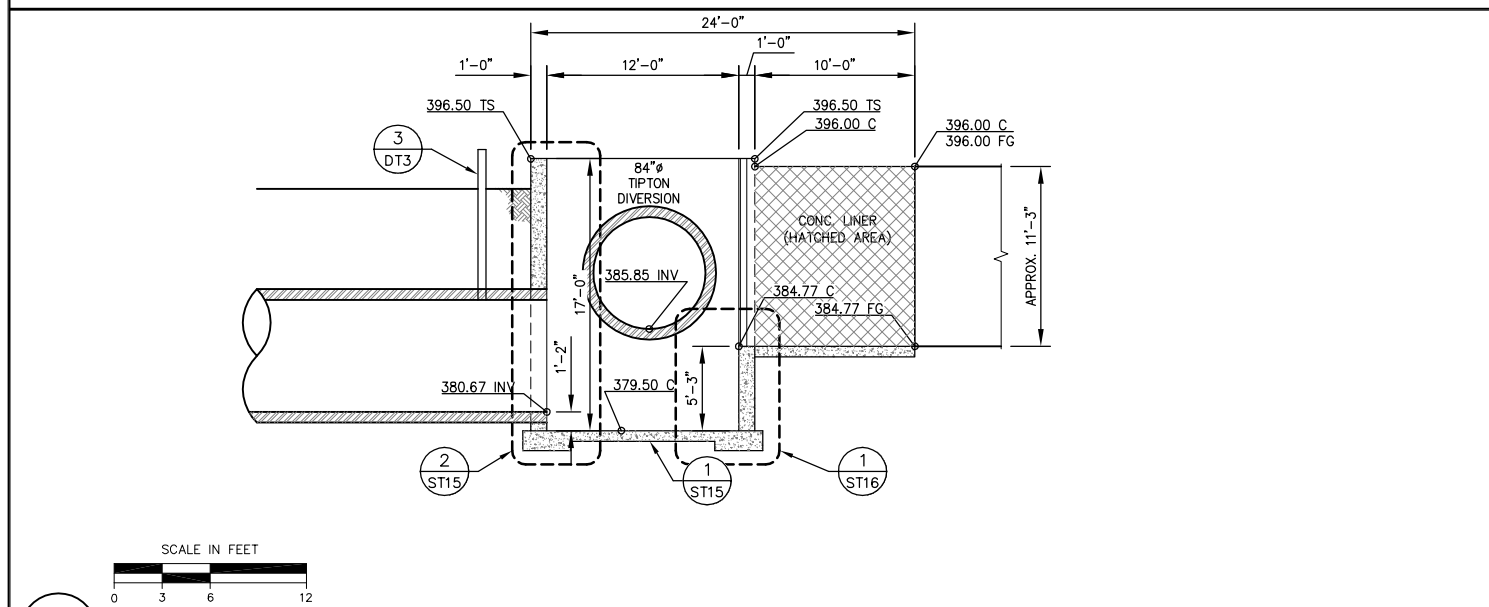

B
ST14

SECTION B

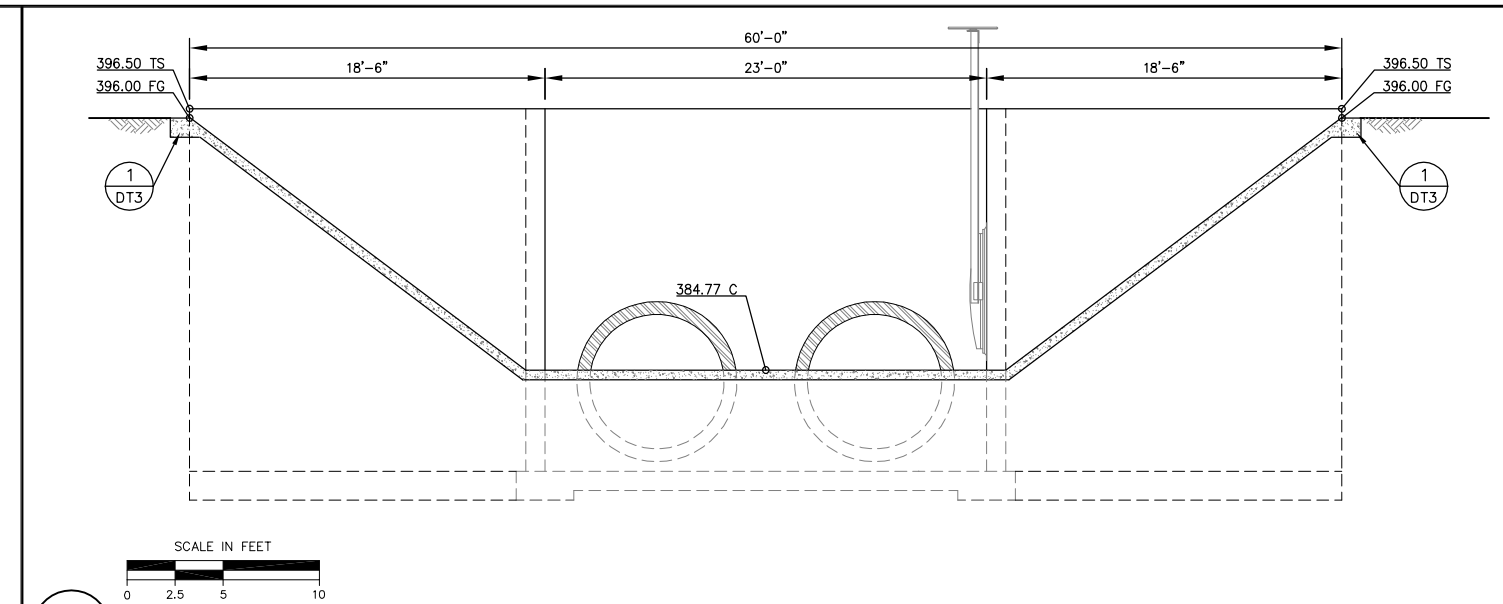

C
ST14

SECTION C

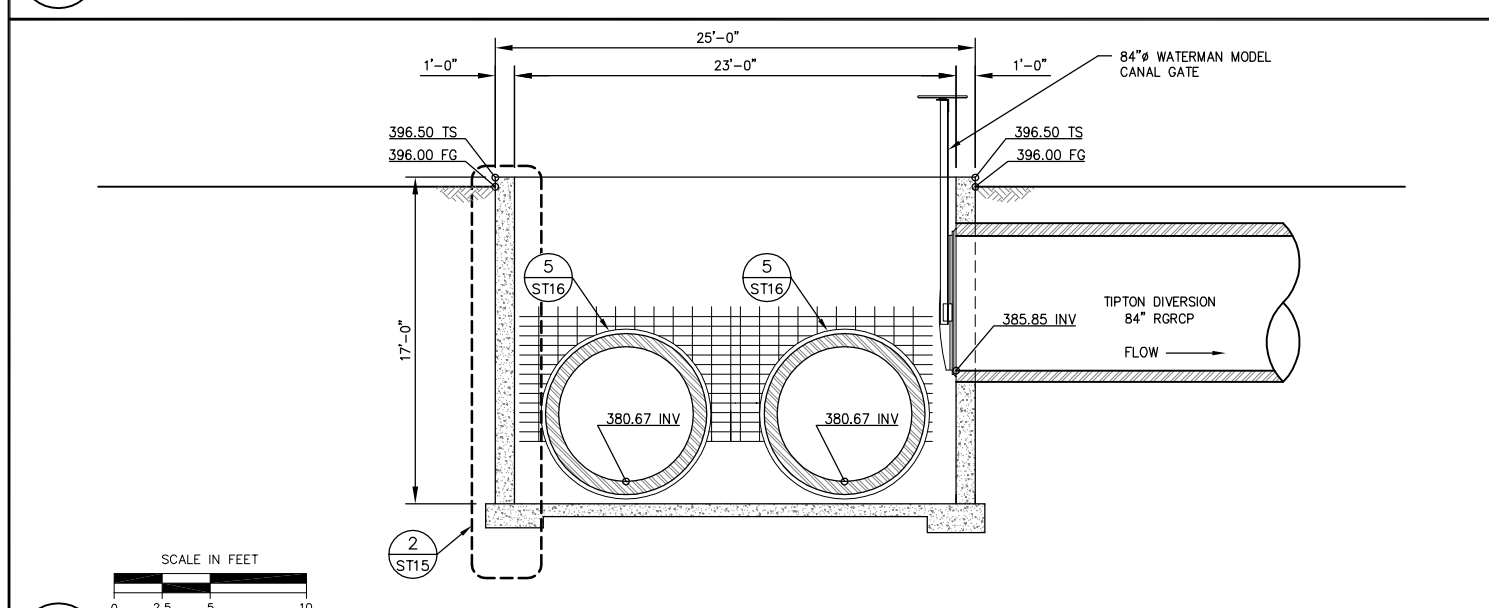

D
ST14

SECTION D

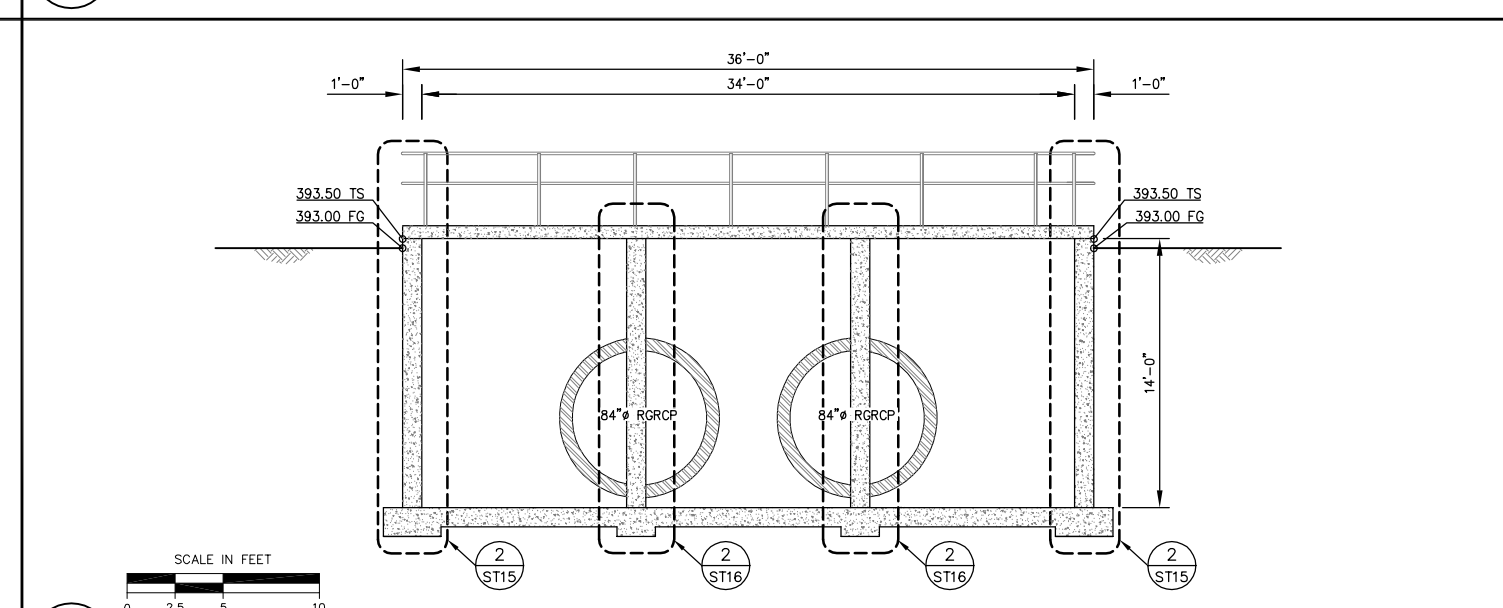

E
ST14

SECTION E

COPYRIGHT 2008 by PROVOST & PRITCHARD
ALL RIGHTS RESERVED
The firm of Provost & Pritchard Engineering Group, Inc. expressly reserves its common law copyright and other property rights in these plans. These plans are not to be reproduced, changed, or copied in any form or manner whatsoever, nor are they to be assigned to any third party without first obtaining the written permission and consent of Provost & Pritchard Engineering Group, Inc. In the event of unauthorized reuse of these plans by a third party, the third party shall hold the firm of Provost & Pritchard Engineering Group, Inc. harmless, and shall defend and indemnify Provost & Pritchard Engineering Group, Inc.'s legal fees associated with defending and enforcing these rights.

PRELIMINARY
NOT FOR CONSTRUCTION
09/28/2009

No.	REVISION	BY	DATE

REGISTERED PROFESSIONAL ENGINEER
DENNIS R. MILLS
No. 67478
EXPIRES: 6/30/11
Civil
STATE OF CALIFORNIA

DATE SIGNED:

TULE RIVER INTERTIE PROJECT
LOWER TULE RIVER IRRIGATION DISTRICT
TULARE COUNTY, CA

AVE 148 CROSSING 2

PROVOST & PRITCHARD
EST. 1945
ENGINEERING & GIS GROUP
An Employee Owned Company
130 NORTH GARDEN ST.
VISALIA, CALIFORNIA 93291-6362
559/636-1166 FAX 559/636-1177
www.ppeng.com

DESIGN ENGINEER: DENNIS MILLS	
LICENSE NO: CE 67,478	
DRAFTED BY: JAB	CHECKED BY: DRM
SCALE: AS SHOWN	
DATE: 9/22/09	
JOB NO: 147708V1	
DWG. NO:	
SHEET ST14 OF 63	

10/20/2009 1:38 PM V:\Clients\LTRID - 1477\147707V1-Tule Intertie\dwg\SHEET\20160501-DT-09-AVE148-02.dwg -Mike A. Porter

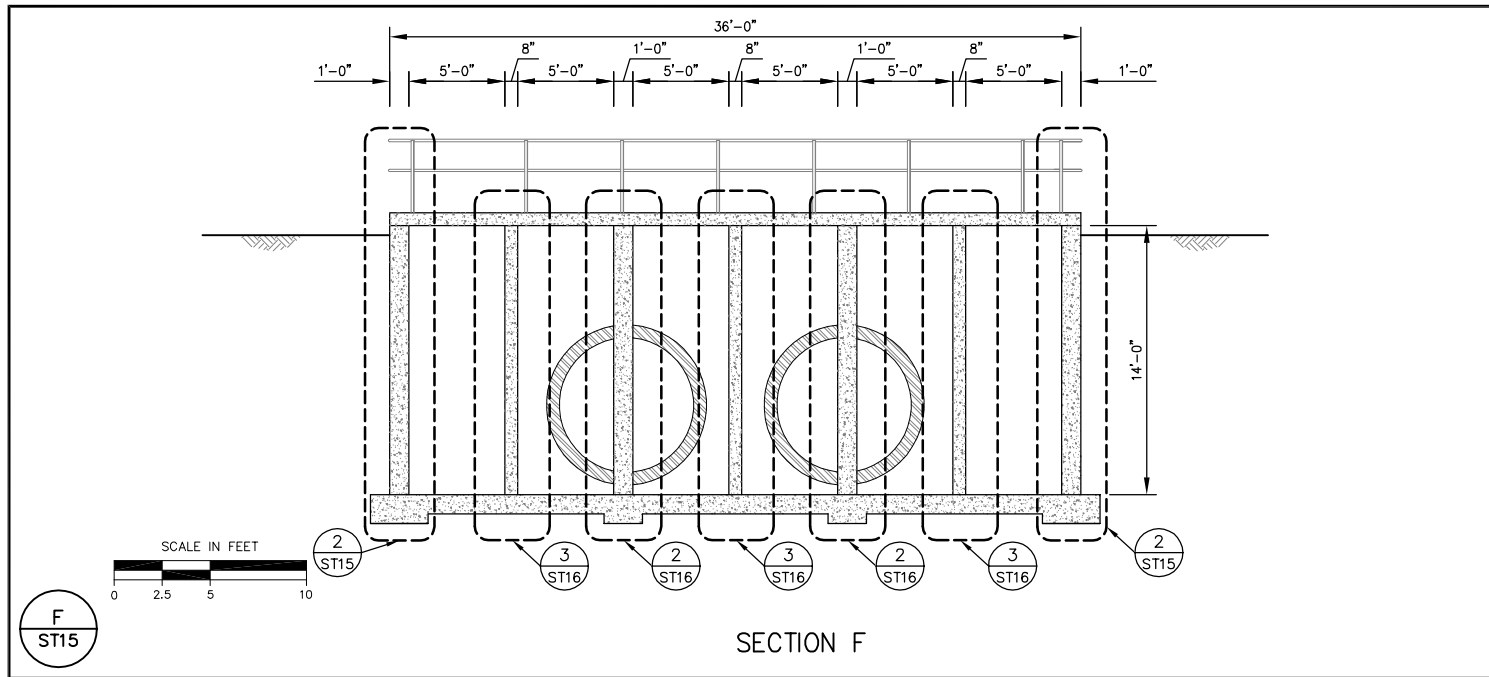

F ST15

SECTION F

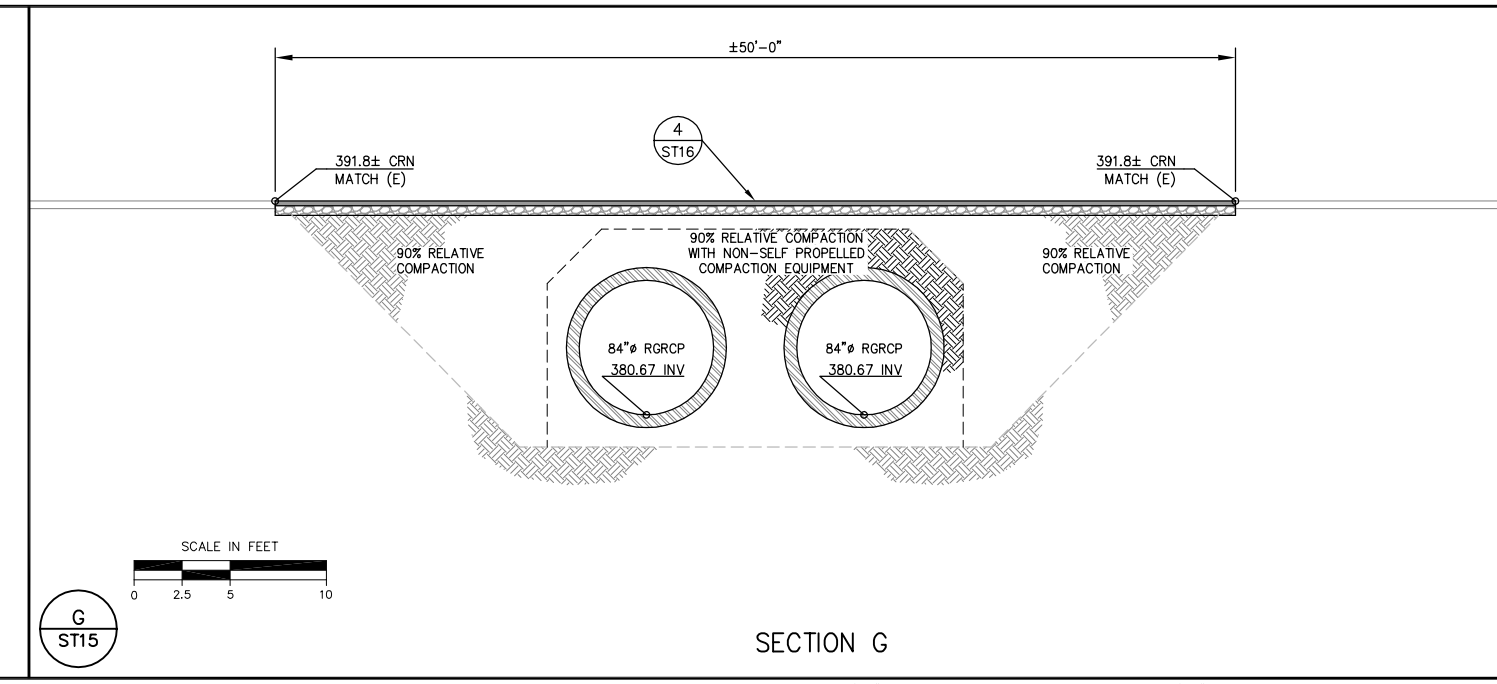

G ST15

SECTION G

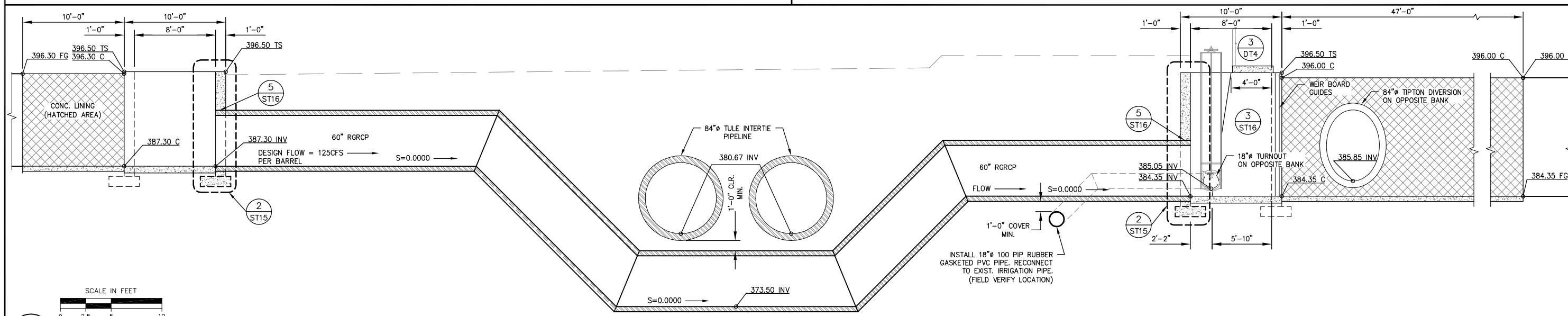

H ST15

SECTION H

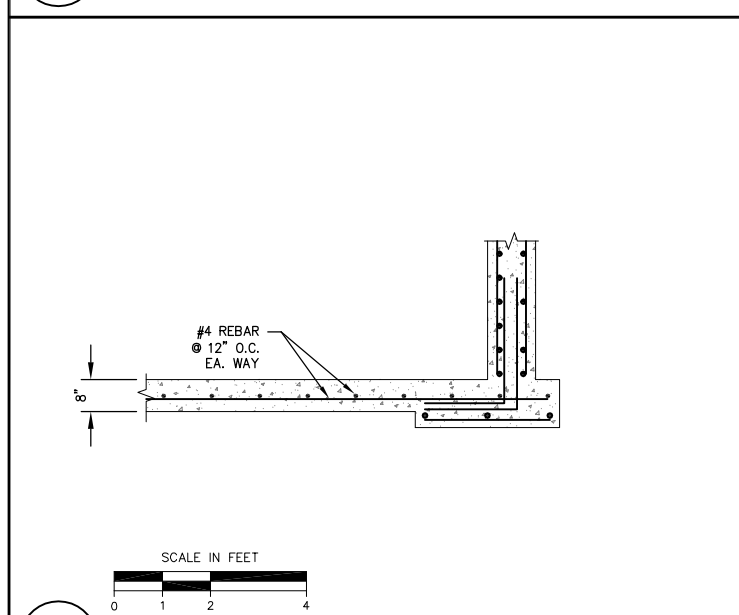

1 ST15

CONC. SLAB REINFORCING

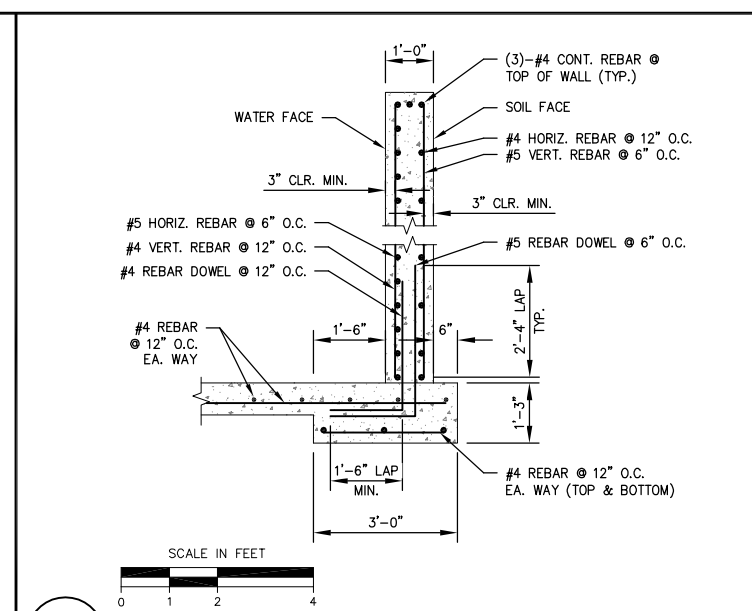

2 ST15

12" WALL REINFORCING

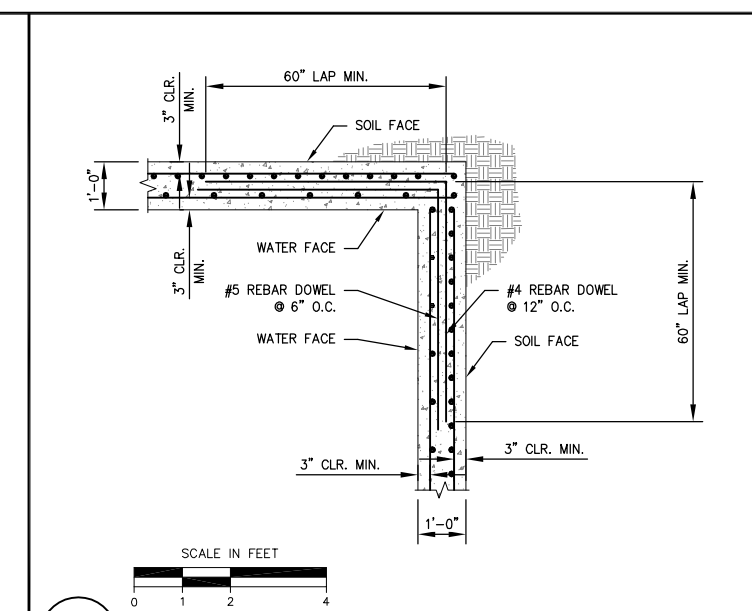

3 ST15

12" WALL CORNER REINFORCING

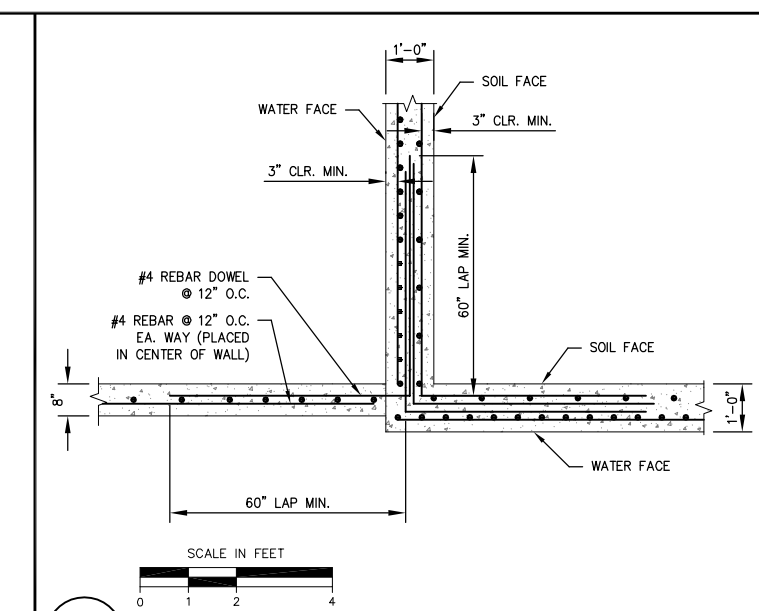

4 ST15

12" WALL-8" STEM WALL REINFORCING

COPYRIGHT 2008 by PROVOST & PRITCHARD
ALL RIGHTS RESERVED
The firm of Provost & Pritchard Engineering Group, Inc. expressly reserves its common law copyright and other property rights in these plans. These plans are not to be reproduced, changed, or copied in any form or manner whatsoever, nor are they to be assigned to any third party without first obtaining the written permission and consent of Provost & Pritchard Engineering Group, Inc. In the event of unauthorized reuse of these plans by a third party, the third party shall hold the firm of Provost & Pritchard Engineering Group, Inc. harmless, and shall defend the firm of Provost & Pritchard Engineering Group, Inc.'s legal fees associated with defending and enforcing these rights.

PRELIMINARY
NOT FOR CONSTRUCTION
09/28/2009

No.	REVISION	BY	DATE

REGISTERED PROFESSIONAL ENGINEER — DENNIS R. MILLS — No. 67478 — EXPIRES: 6/30/11 — CIVIL — STATE OF CALIFORNIA

DATE SIGNED:

TULE RIVER INTERTIE PROJECT
LOWER TULE RIVER IRRIGATION DISTRICT
TULARE COUNTY, CA

AVE 148 CROSSING 3

PROVOST & PRITCHARD
EST. 1945
ENGINEERING & SERVICES GROUP
An Employee Owned Company
130 NORTH GARDEN ST.
VISALIA, CALIFORNIA 93291-6362
559/636-1166 FAX 559/636-1177
www.pperg.com

DESIGN ENGINEER: DENNIS MILLS	
LICENSE NO: CE 67,478	
DRAFTED BY: JAB	CHECKED BY: DRM
SCALE: AS SHOWN	
DATE: 9/22/09	
JOB NO: 147708V1	
DWG. NO:	
SHEET ST15 OF 63	

10/20/2009 1:38 PM V:\Clients\LTRID - 1477\147707V1-Tule Intertie\dwg\SHEET\20160501-DT-09-AVE148-03.dwg -Mike A. Porter

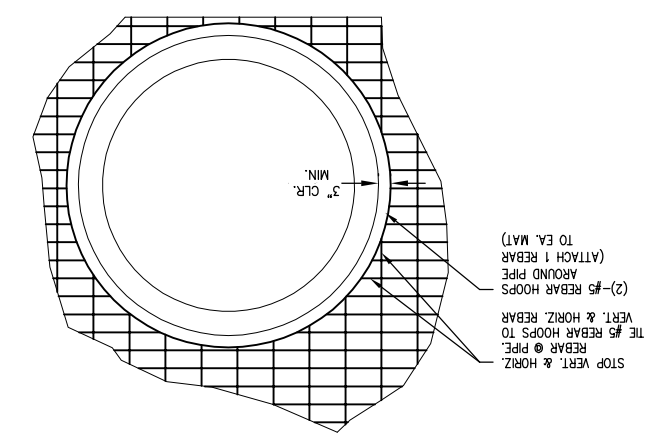

5 / ST16 RGRCP-WALL REINFORCING

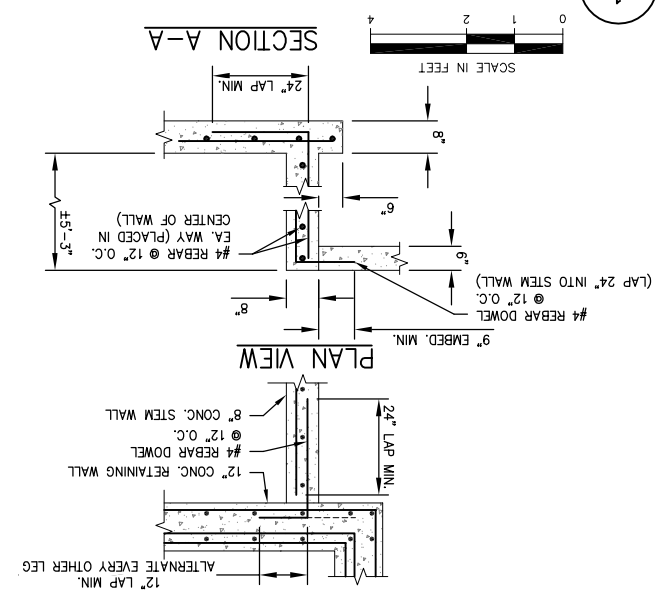

1 / ST16 8" STEM WALL REINFORCING

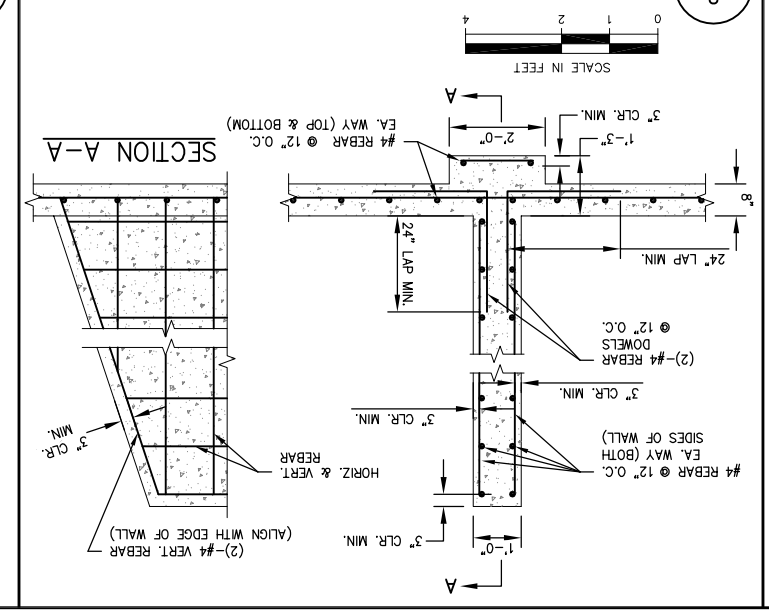

2 / ST16 12" PIER WALL REINFORCING

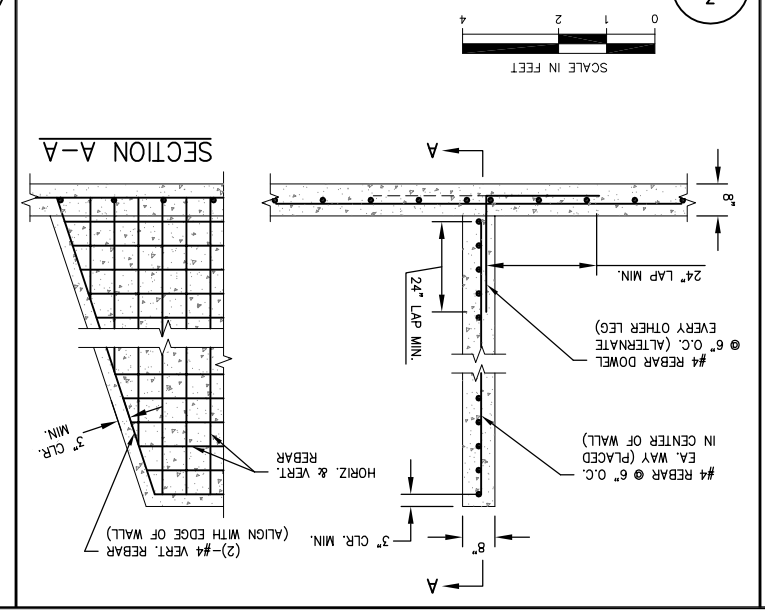

3 / ST16 8" PIER WALL REINFORCING

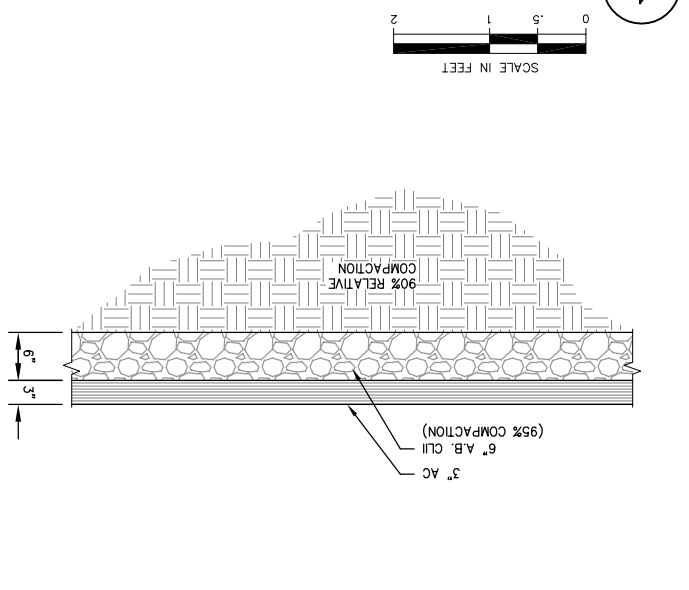

4 / ST16 PAVEMENT SECTION

TULE RIVER INTERTIE PROJECT
LOWER TULE RIVER IRRIGATION DISTRICT
TULARE COUNTY, CA

AVE 148 CROSSING 4

PROVOST & PRITCHARD ENGINEERING GROUP, INC.
EST. 1946
An Employee Owned Company
130 NORTH GARDEN ST.
VISALIA, CALIFORNIA 93291-6362
559/636-1166 FAX 559/636-1177
www.ppeng.com

REGISTERED PROFESSIONAL ENGINEER
DENNIS R. MILLS
No. 67478
Civil
EXPIRES: 6/30/11
STATE OF CALIFORNIA

DATE SIGNED: _____

No.	REVISION	BY	DATE

PRELIMINARY
NOT FOR CONSTRUCTION
09/28/2009

COPYRIGHT 2009 by PROVOST & PRITCHARD
The firm of Provost & Pritchard Engineering Group, Inc. expressly reserves its common law copyright and other property rights in these plans. These plans are not to be reproduced, changed, or copied in any form or manner whatsoever, nor are they to be assigned to any third party without first obtaining the written permission and consent of Provost & Pritchard Engineering Group, Inc. In the event of unauthorized reuse of these plans by a third party, the third party shall hold the firm of Provost & Pritchard Engineering Group, Inc. harmless therefrom and shall bear the cost of Provost & Pritchard Engineering Group, Inc.'s legal fees associated with defending and enforcing these rights.

DESIGN ENGINEER:
DENNIS MILLS
LICENSE NO:
CE 67,478

DRAFTED BY:	CHECKED BY:
JAB	DRM

SCALE: AS SHOWN
DATE: 9/22/09
JOB NO: 1477080V1
DWG. NO:
SHEET
ST16 OF 63

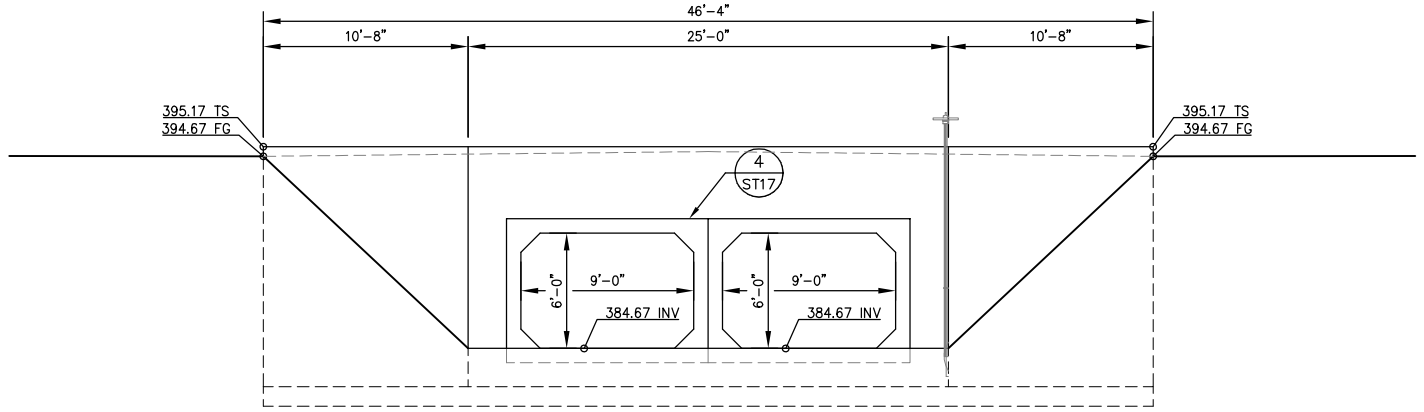

A
ST17

SECTION A

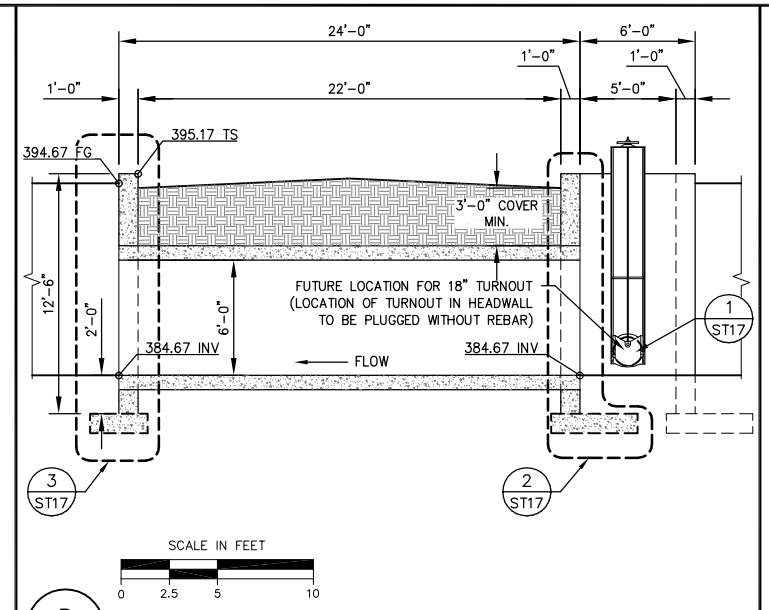

B
ST17

SECTION B

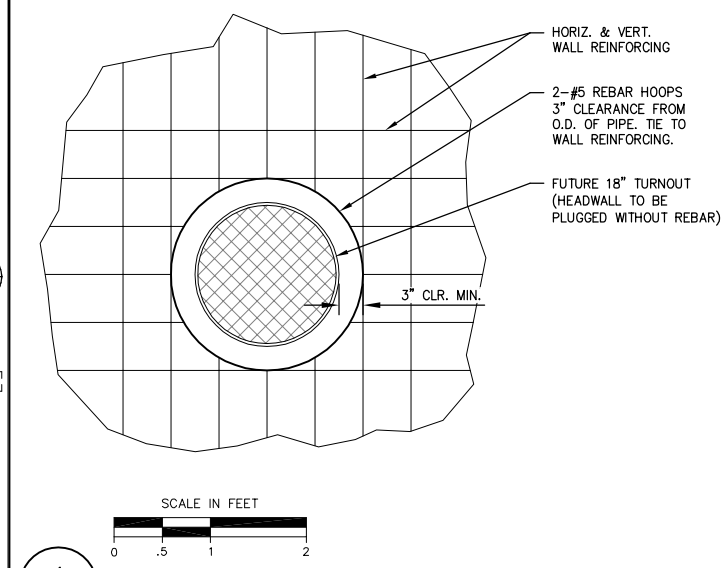

1
ST17

FUTURE TURNOUT REINFORCING

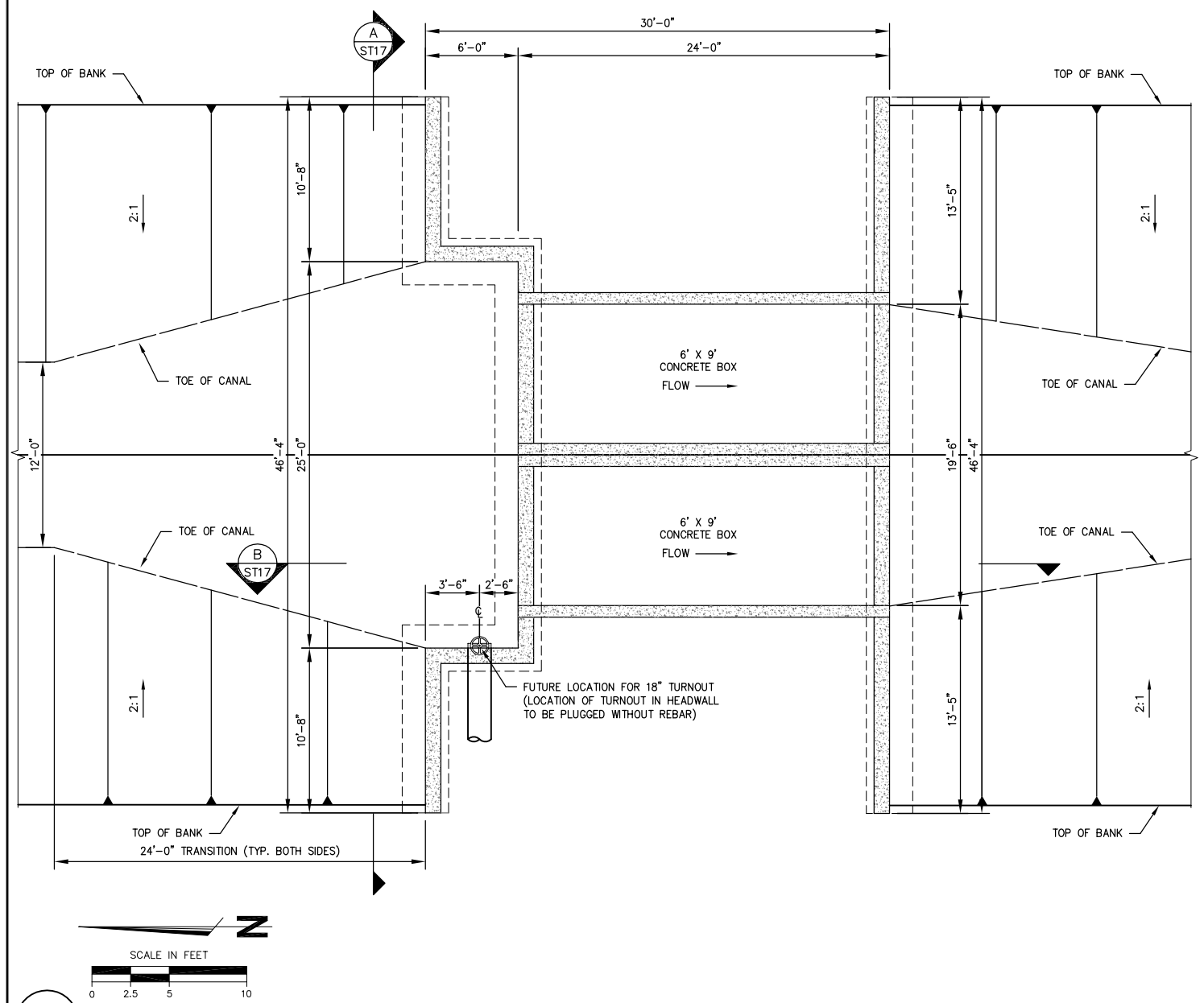

PLN
ST17

PLAN VIEW

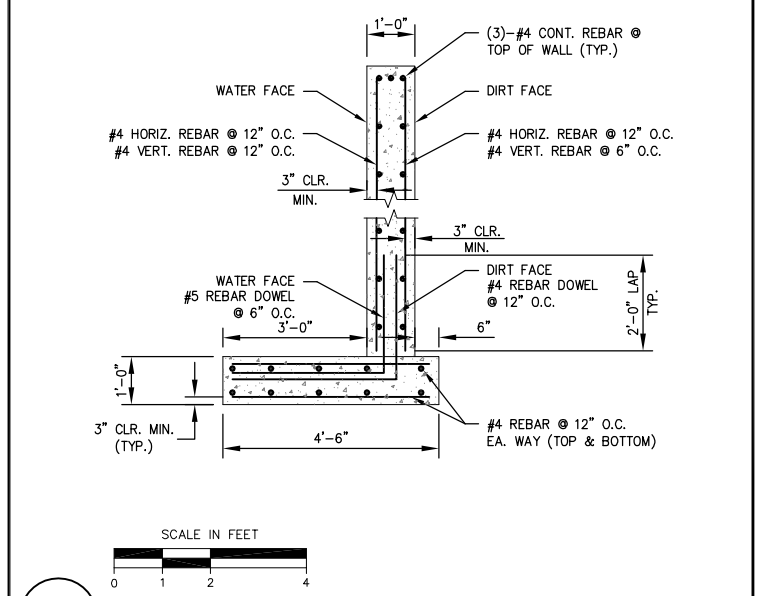

2
ST17

UPSTREAM HEADWALL REINFORCING

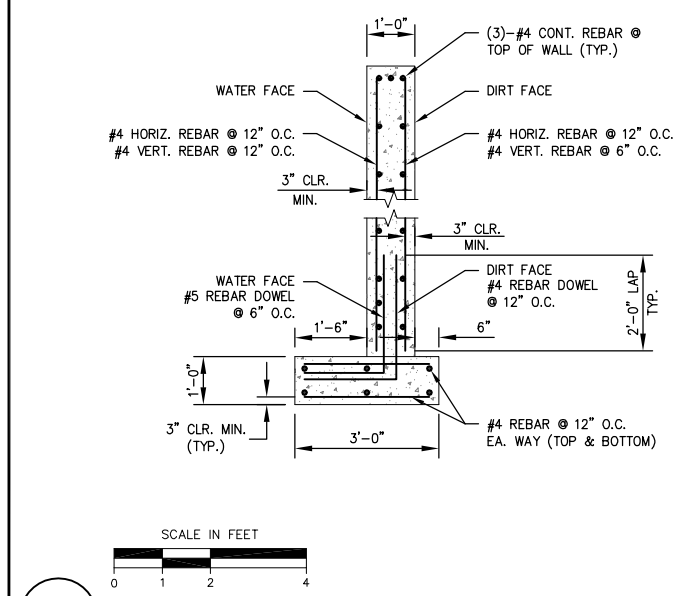

3
ST17

DOWNSTREAM RETAINING WALL REINFORCING

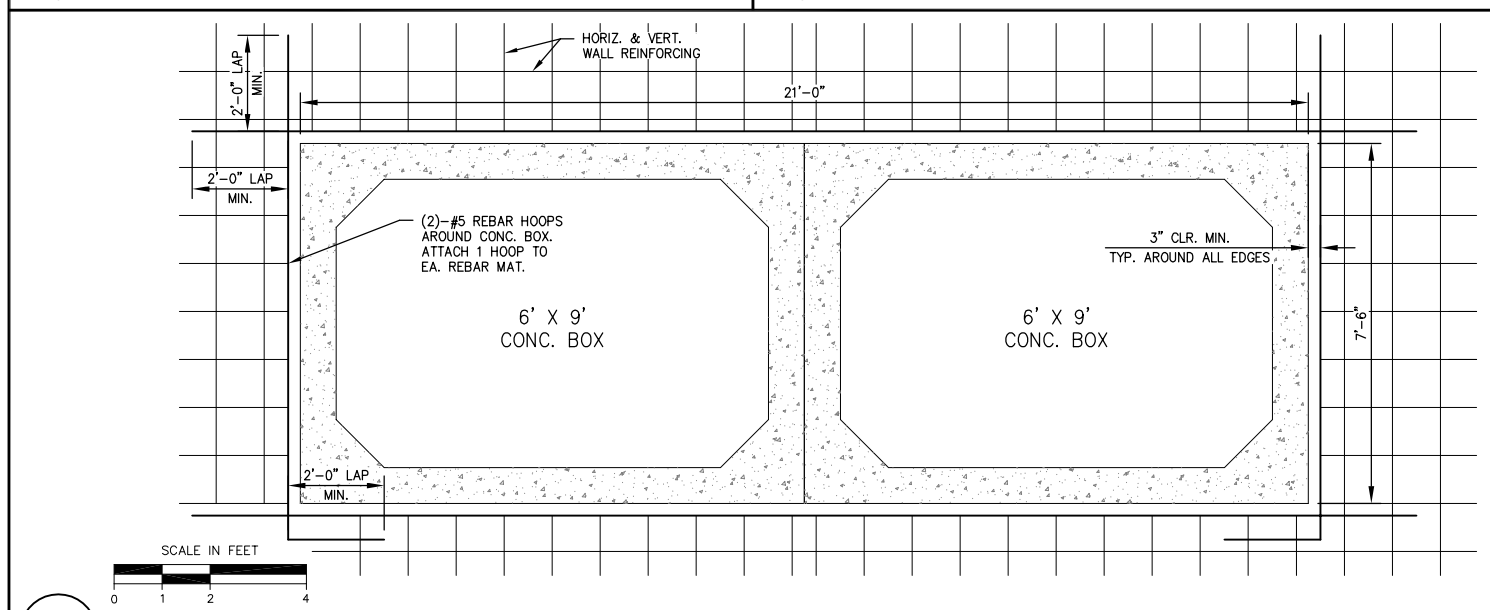

4
ST17

6' X 9' CONCRETE BOX OPENING REINFORCING

COPYRIGHT 2008 by PROVOST & PRITCHARD
ALL RIGHTS RESERVED
The firm of Provost & Pritchard Engineering Group, Inc. expressly reserves its common law copyright and other property rights in these plans. These plans are not to be reproduced, changed, or copied in any form or manner whatsoever, nor are they to be assigned to any third party without first obtaining the written permission and consent of Provost & Pritchard Engineering Group, Inc. In the event of unauthorized reuse of these plans by a third party, the third party shall hold the firm of Provost & Pritchard Engineering Group, Inc. harmless, and shall defend and indemnify Provost & Pritchard Engineering Group, Inc.'s legal fees associated with defending and enforcing these rights.

PRELIMINARY
NOT FOR CONSTRUCTION
09/28/2009

No.	REVISION	BY	DATE

TULE RIVER INTERTIE PROJECT
LOWER TULE RIVER IRRIGATION DISTRICT
TULARE COUNTY, CA

AVE 146 ALIGNMENT

PROVOST & PRITCHARD
EST. 1945
ENGINEERING & GROUP
An Employee Owned Company
130 NORTH GARDEN ST.
VISALIA, CALIFORNIA 93291-6362
559/636-1166 FAX 559/636-1177
www.pperg.com

DESIGN ENGINEER: DENNIS MILLS
LICENSE NO: CE 67,478
DRAFTED BY: JAB
CHECKED BY: DRM
SCALE:
DATE: 9/22/09
JOB NO: 147708V1
DWG. NO:
SHEET
ST17 OF 63

10/20/2009 1:39 PM V:\Clients\LTRID - 1477\147707V1-Tule Intertie\dwg\SHEET\20160501-DT-AVE146-1.dwg -Mike A. Porter

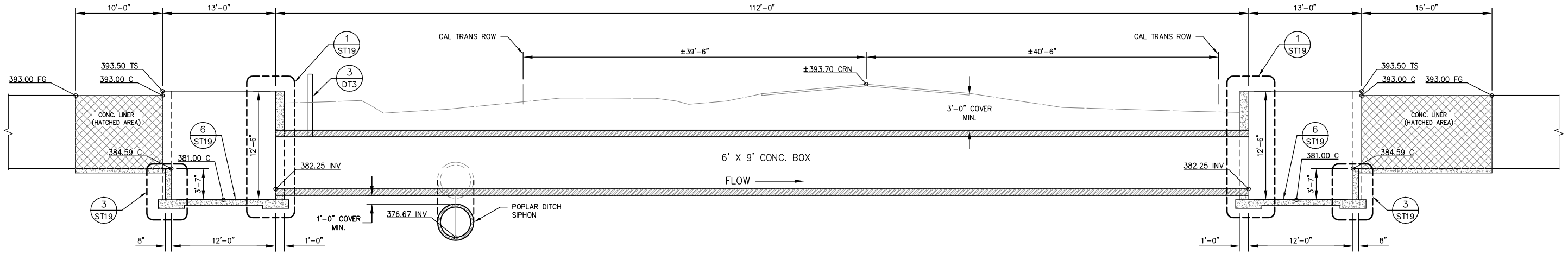

SCALE IN FEET
0 3 6 12

A ST18

SECTION A

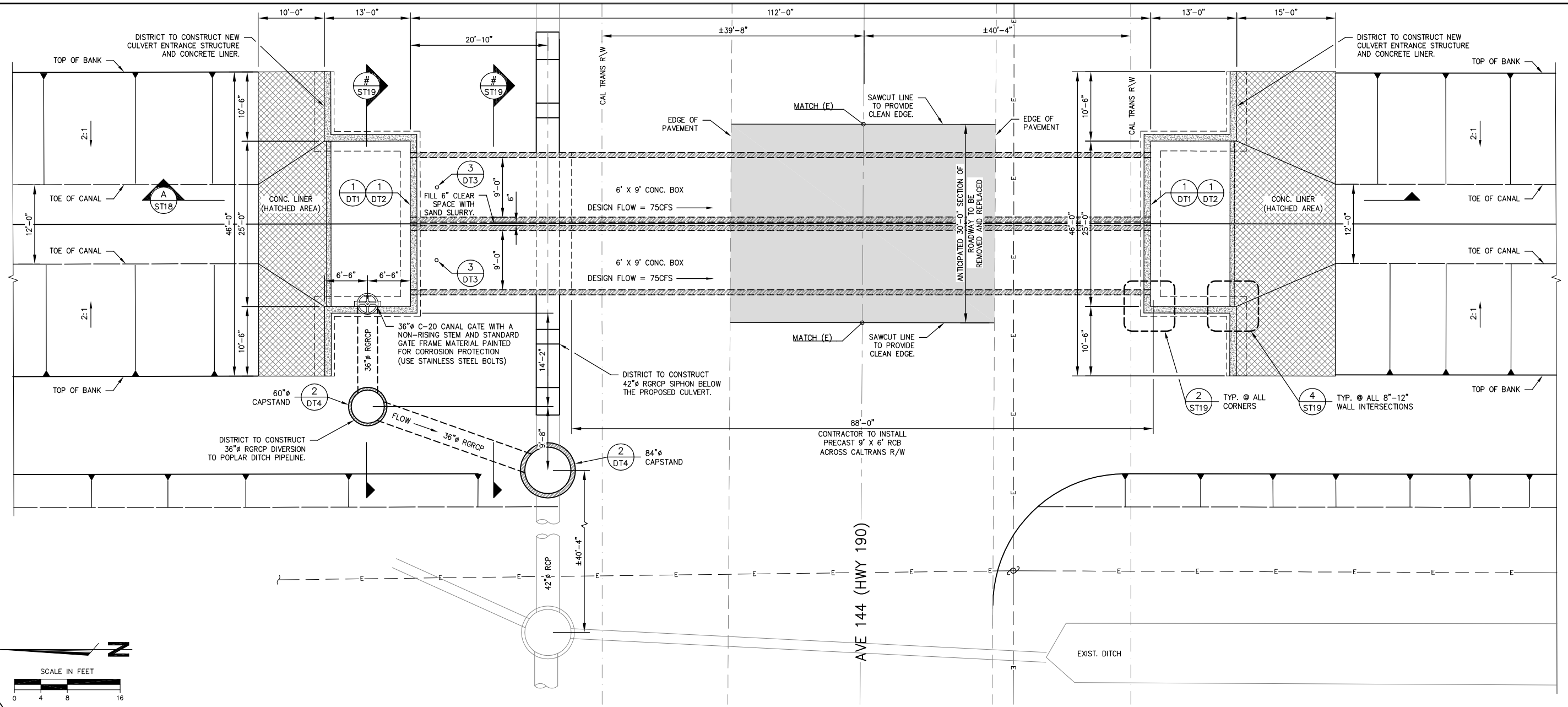

SCALE IN FEET
0 4 8 16

PLN ST18

PLAN VIEW

COPYRIGHT 2009 by PROVOST & PRITCHARD
ALL RIGHTS RESERVED
The firm of Provost & Pritchard Engineering Group, Inc. expressly reserves its common law copyright and other property rights in these plans. These plans are not to be reproduced, changed, or copied in any form or manner whatsoever, nor are they to be assigned to any third party without first obtaining the written permission and consent of Provost & Pritchard Engineering Group, Inc. In the event of unauthorized reuse of these plans by a third party, the third party shall hold the firm of Provost & Pritchard Engineering Group, Inc. harmless, and shall defend, at its own expense, Provost & Pritchard Engineering Group, Inc.'s legal fees associated with defending and enforcing these rights.

PRELIMINARY
NOT FOR CONSTRUCTION
09/28/2009

No.	REVISION	BY	DATE

REGISTERED PROFESSIONAL ENGINEER
DENNIS R. MILLS
No. 67478
EXPIRES: 6/30/09
Civil
STATE OF CALIFORNIA

DATE SIGNED:

TULE RIVER INTERTIE PROJECT
LOWER TULE RIVER IRRIGATION DISTRICT
TULARE COUNTY, CA

STATE ROUTE 190 CROSSING 1

EST. 1965
PROVOST & PRITCHARD
ENGINEERING GROUP
An Employee Owned Company
130 NORTH GARDEN ST.
VISALIA, CALIFORNIA 93291-6362
559/636-1166 FAX 559/636-1177
www.ppeng.com

DESIGN ENGINEER: DENNIS MILLS	
LICENSE NO: CE 67,478	
DRAFTED BY: JAB	CHECKED BY: DRM
SCALE: AS SHOWN	
DATE: 9/22/09	
JOB NO: 147708V1	
DWG. NO:	
SHEET ST18 OF 63	

10/20/2009 1:39 PM V:\Clients\LTRID - 1477\147707V1-Tule Intertie\dwg\SHEET\20160501-DT-10-AVE144-01.dwg -David

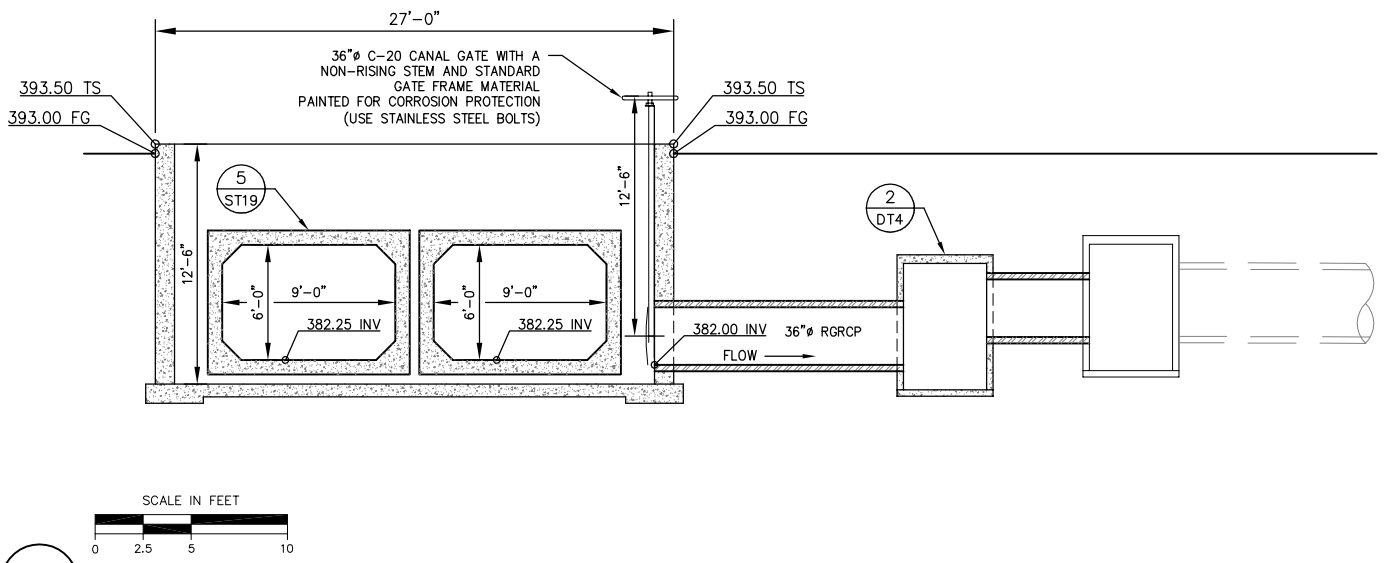

B ST19

SECTION B

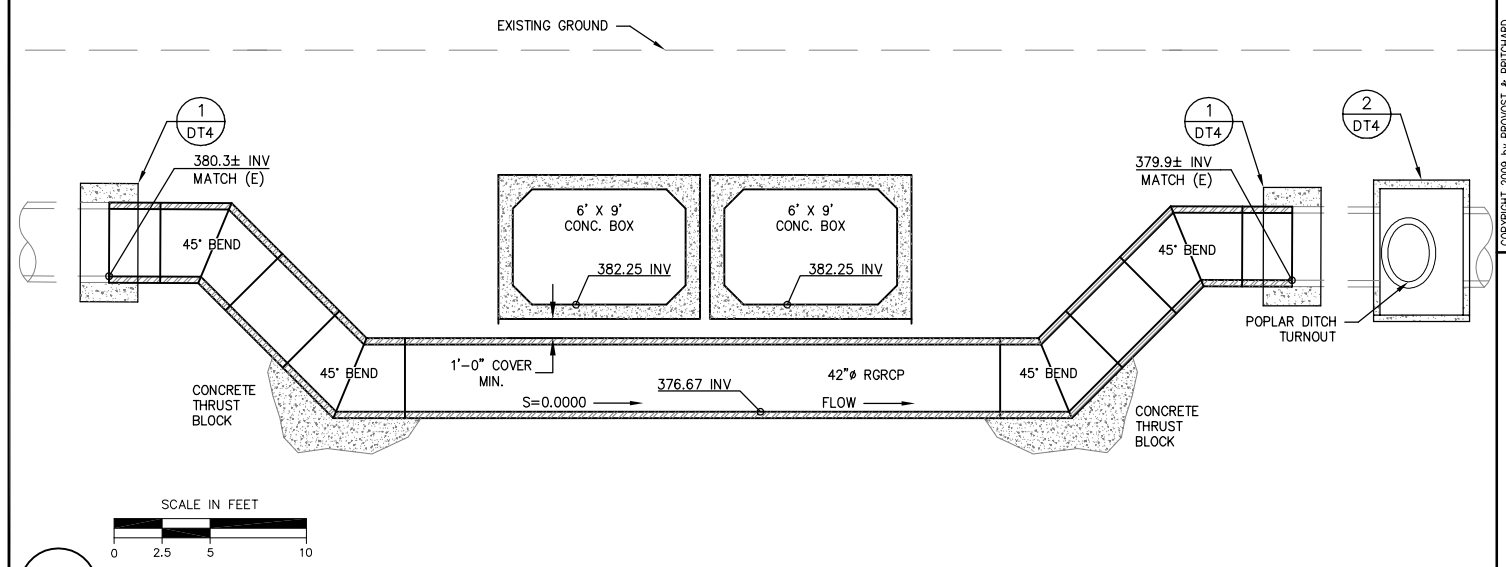

C ST19

SECTION C

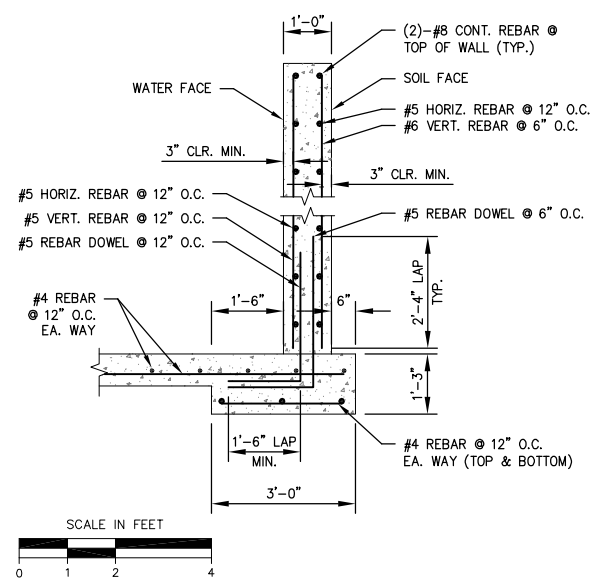

1 ST19

12" WALL REINFORCING

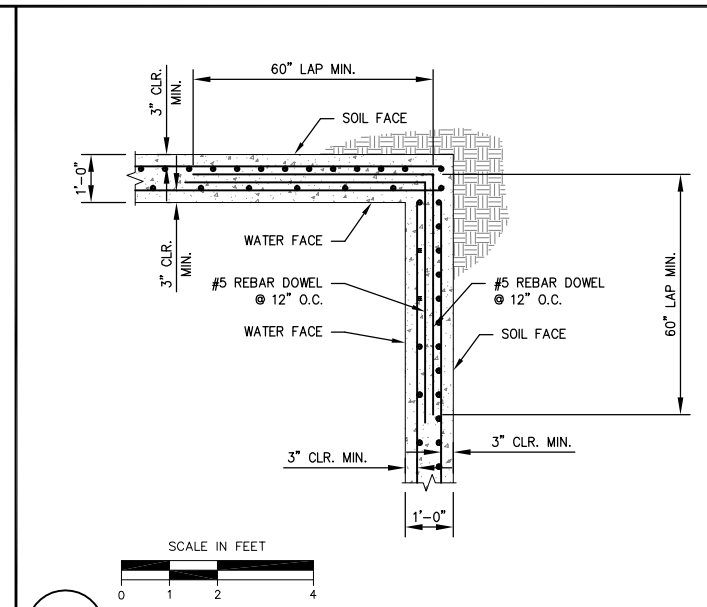

2 ST19

12" WALL CORNER REINFORCING

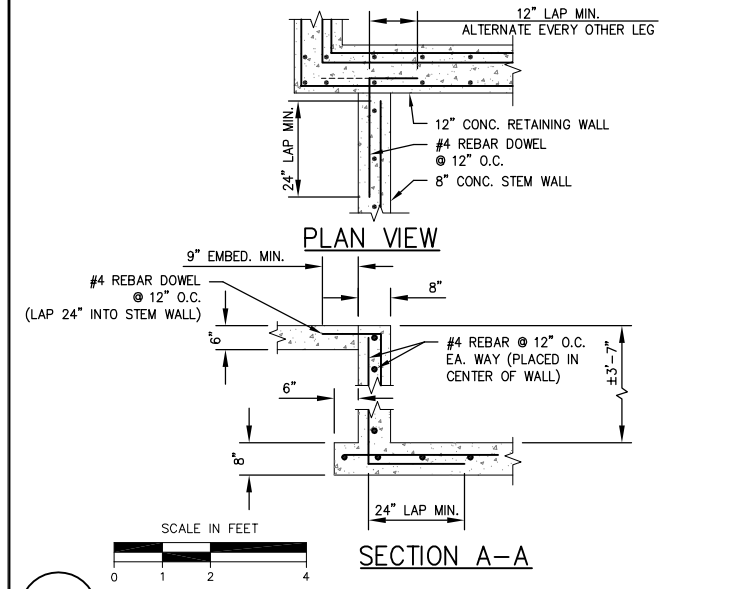

SECTION A-A

3 ST19

STEM WALL REINFORCING

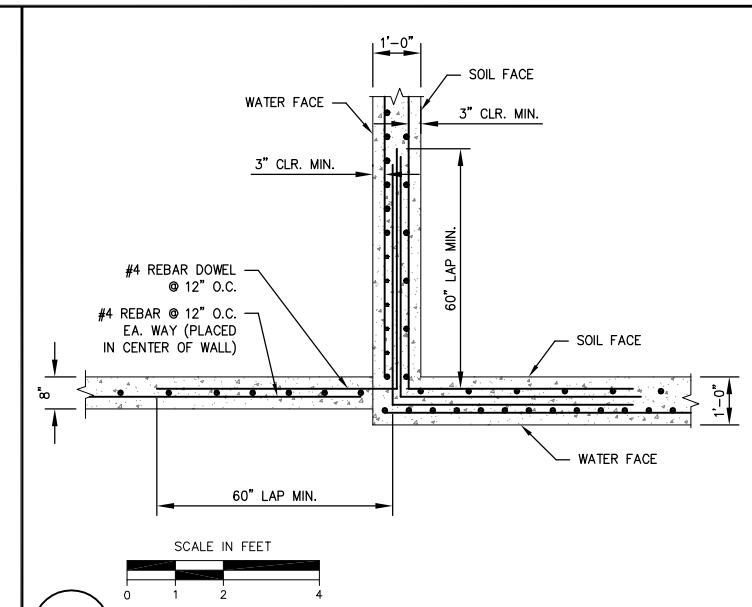

4 ST19

12" WALL-8" STEM WALL REINFORCING

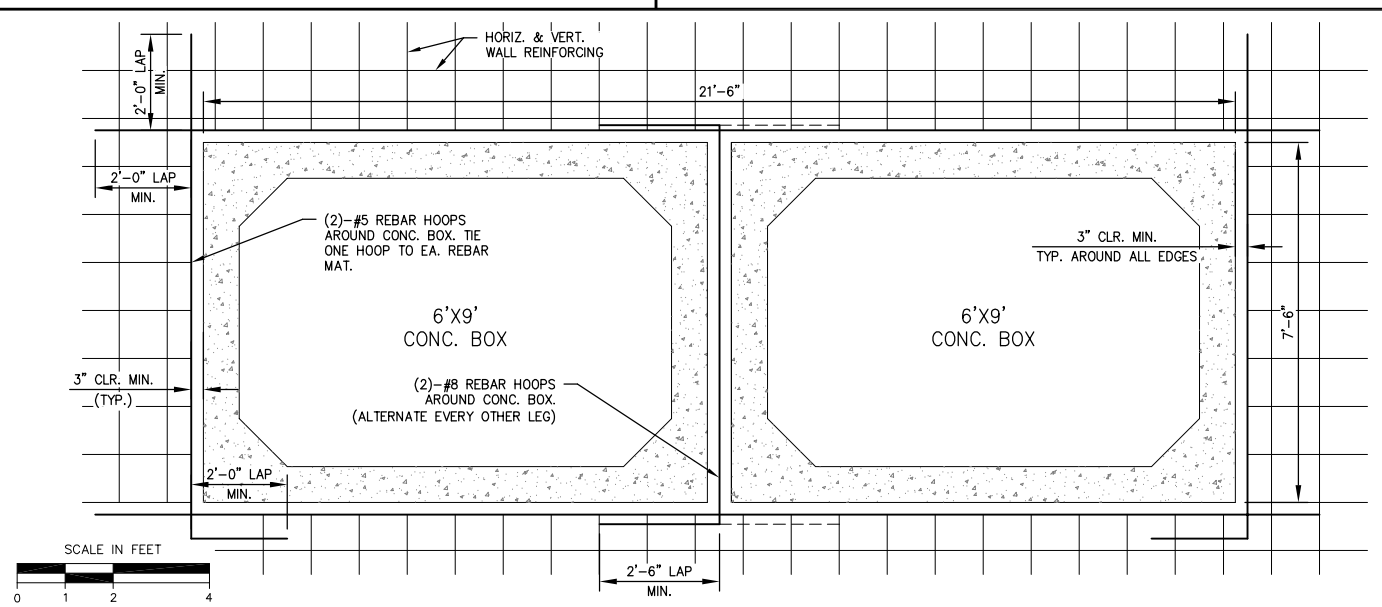

5 ST19

6' X 9' CONCRETE BOX OPENING REINFORCING

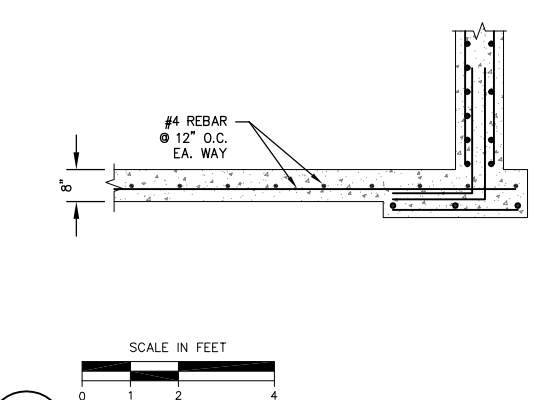

6 ST19

CONC. SLAB REINFORCING

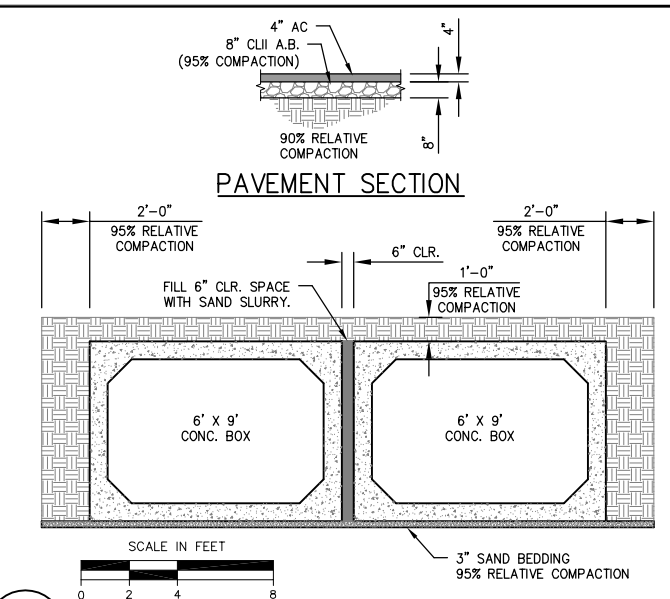

7 ST19

CALTRANS COMPACTION & PAVEMENT SECTION

COPYRIGHT 2008 by PROVOST & PRITCHARD ENGINEERING GROUP, INC. ALL RIGHTS RESERVED. The firm of Provost & Pritchard Engineering Group, Inc. expressly reserves its common law copyright and other property rights in these plans. These plans are not to be reproduced, changed, or copied in any form or manner whatsoever, nor are they to be assigned to any third party without first obtaining the written permission and consent of Provost & Pritchard Engineering Group, Inc. In the event of unauthorized reuse of these plans by a third party, the third party shall hold the firm of Provost & Pritchard Engineering Group, Inc. harmless, and shall defend and indemnify Provost & Pritchard Engineering Group, Inc.'s legal fees associated with defending and enforcing these rights.

PRELIMINARY
NOT FOR CONSTRUCTION
09/28/2009

No.	REVISION	BY	DATE

REGISTERED PROFESSIONAL ENGINEER DENNIS R. MILLS No. 67478 EXPIRES: 6/30/09 Civil STATE OF CALIFORNIA

DATE SIGNED:

TULE RIVER INTERTIE PROJECT
LOWER TULE RIVER IRRIGATION DISTRICT
TULARE COUNTY, CA

STATE ROUTE 190 CROSSING 2

PROVOST & PRITCHARD ENGINEERING GROUP
EST. 1968
An Employee Owned Company
130 NORTH GARDEN ST.
VISALIA, CALIFORNIA 93291-6362
559/636-1166 FAX 559/636-1177
www.ppeng.com

DESIGN ENGINEER: DENNIS MILLS	
LICENSE NO: CE 67,478	
DRAFTED BY: JAB	CHECKED BY: DRM
SCALE: AS SHOWN	
DATE: 9/22/09	
JOB NO: 147708V1	
DWG. NO:	
SHEET ST19 OF 63	

10/20/2009 1:39 PM V:\Clients\LTRID - 1477\147707V1-Tule Intertie\dwg\SHEET\20160501-DT-10-A\E144-02.dwg -David

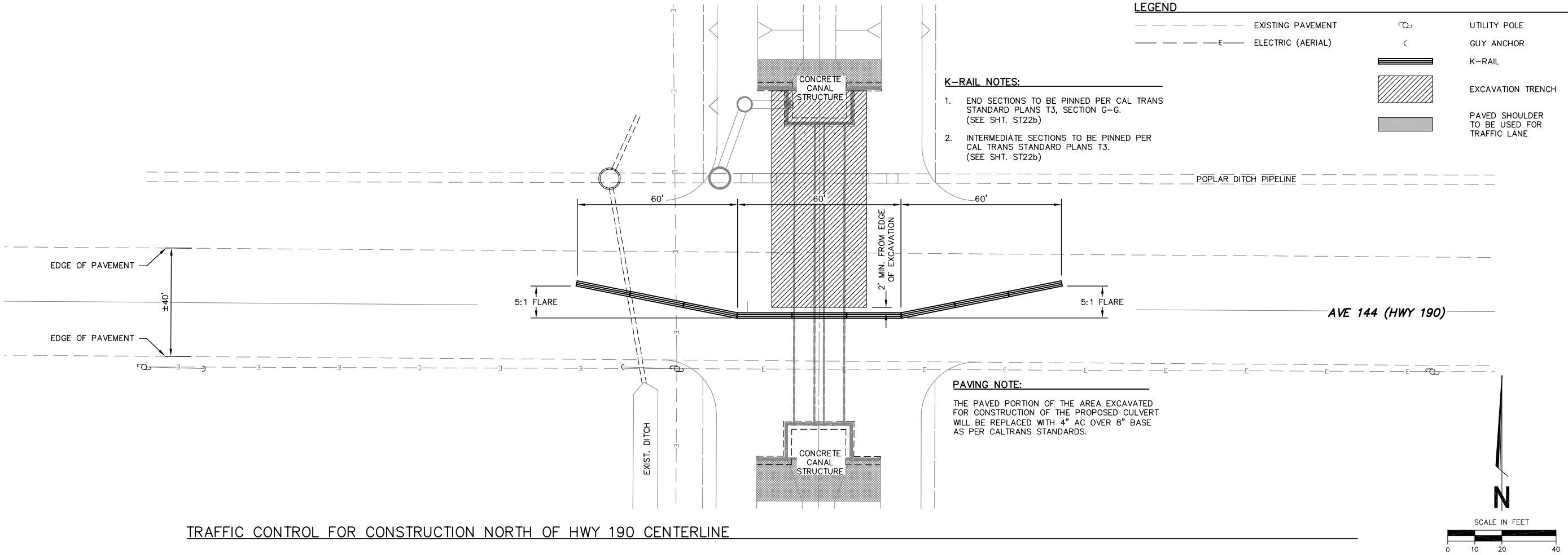

LEGEND

- EXISTING PAVEMENT
- ELECTRIC (AERIAL)
- UTILITY POLE
- GUY ANCHOR
- K-RAIL
- EXCAVATION TRENCH
- PAVED SHOULDER TO BE USED FOR TRAFFIC LANE

K-RAIL NOTES:

1. END SECTIONS TO BE PINNED PER CAL TRANS STANDARD PLANS T3, SECTION G-G. (SEE SHT. ST22b)
2. INTERMEDIATE SECTIONS TO BE PINNED PER CAL TRANS STANDARD PLANS T3. (SEE SHT. ST22b)

PAVING NOTE:

THE PAVED PORTION OF THE AREA EXCAVATED FOR CONSTRUCTION OF THE PROPOSED CULVERT WILL BE REPLACED WITH 4" AC OVER 8" BASE AS PER CALTRANS STANDARDS.

TRAFFIC CONTROL FOR CONSTRUCTION NORTH OF HWY 190 CENTERLINE

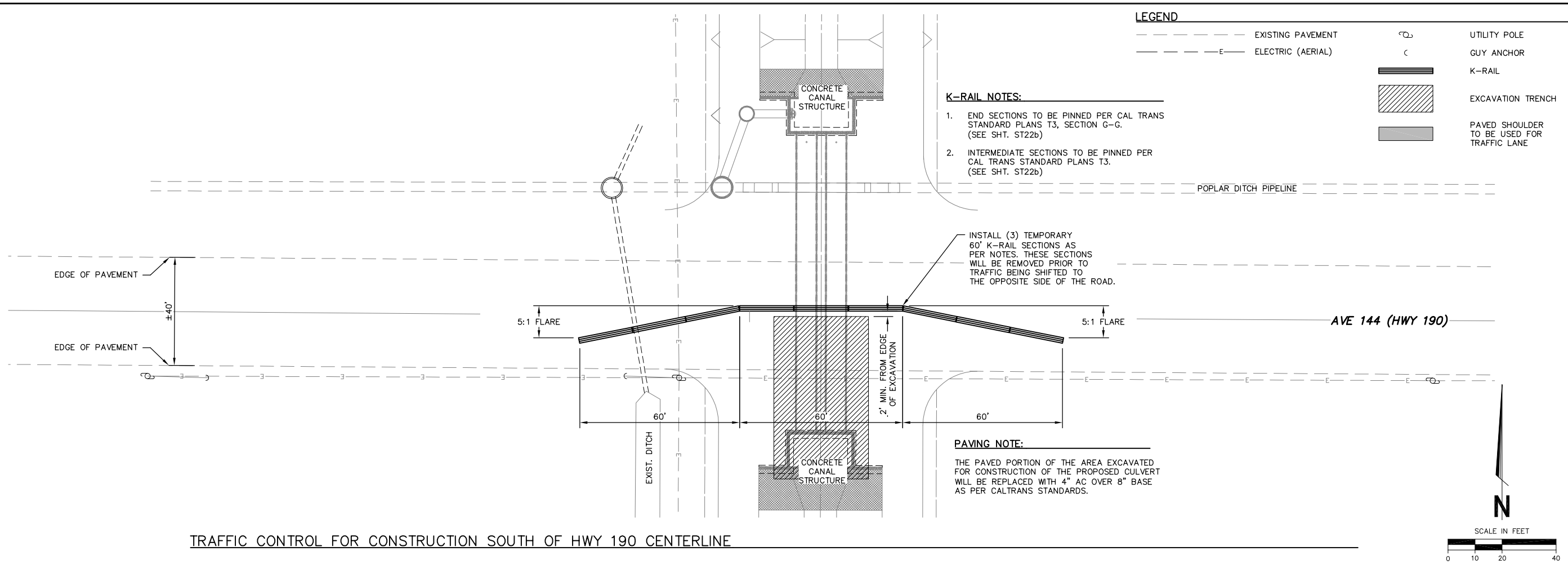

LEGEND

- EXISTING PAVEMENT
- ELECTRIC (AERIAL)
- UTILITY POLE
- GUY ANCHOR
- K-RAIL
- EXCAVATION TRENCH
- PAVED SHOULDER TO BE USED FOR TRAFFIC LANE

K-RAIL NOTES:

1. END SECTIONS TO BE PINNED PER CAL TRANS STANDARD PLANS T3, SECTION G-G. (SEE SHT. ST22b)
2. INTERMEDIATE SECTIONS TO BE PINNED PER CAL TRANS STANDARD PLANS T3. (SEE SHT. ST22b)

PAVING NOTE:

THE PAVED PORTION OF THE AREA EXCAVATED FOR CONSTRUCTION OF THE PROPOSED CULVERT WILL BE REPLACED WITH 4" AC OVER 8" BASE AS PER CALTRANS STANDARDS.

TRAFFIC CONTROL FOR CONSTRUCTION SOUTH OF HWY 190 CENTERLINE

COPYRIGHT 2009 by PROVOST & PRITCHARD ENGINEERING GROUP, INC. ALL RIGHTS RESERVED
The firm of Provost & Pritchard Engineering Group, Inc. expressly reserves its common law copyright and other applicable property rights in these plans. These plans are not to be reproduced, changed, or copied in any form or manner whatsoever, nor are they to be assigned to a third party without first obtaining the written permission and consent of Provost & Pritchard Engineering Group, Inc. In the event of unauthorized reuse of these plans by a third party, the third party shall hold the firm of Provost & Pritchard Engineering Group, Inc. harmless, and shall bear the cost of Provost & Pritchard Engineering Group, Inc.'s legal fees associated with defending and enforcing these rights.

PRELIMINARY
NOT FOR CONSTRUCTION
09/28/2009

No.	REVISION	BY	DATE

REGISTERED PROFESSIONAL ENGINEER
DENNIS R. MILLS
No. 67478
EXPIRES: 6/30/11
Civil
STATE OF CALIFORNIA

DATE SIGNED:

TULE RIVER INTERTIE PROJECT
LOWER TULE RIVER IRRIGATION DISTRICT
TULARE COUNTY, CA

STATE HIGHWAY 190
TRAFFIC CONTROL PLAN 1

PROVOST & PRITCHARD ENGINEERING GROUP
EST. 1963
An Employee Owned Company
130 NORTH GARDEN ST.
VISALIA, CALIFORNIA 93291-6362
559/636-1166 FAX 559/636-1177
www.ppeng.com

DESIGN ENGINEER: DENNIS MILLS
LICENSE NO: CE 67,478
DRAFTED BY: JAB
CHECKED BY: DRM
SCALE: AS SHOWN
DATE: 9/22/09
JOB NO: 147708V1
DWG. NO:
SHEET ST20a OF 63

10/20/2009 1:42 PM V:\Clients\LTRID - 1477\147707V1-Tule Intertie\dwg\SHEET\20160501-DT-10-AVE144-03.dwg -David

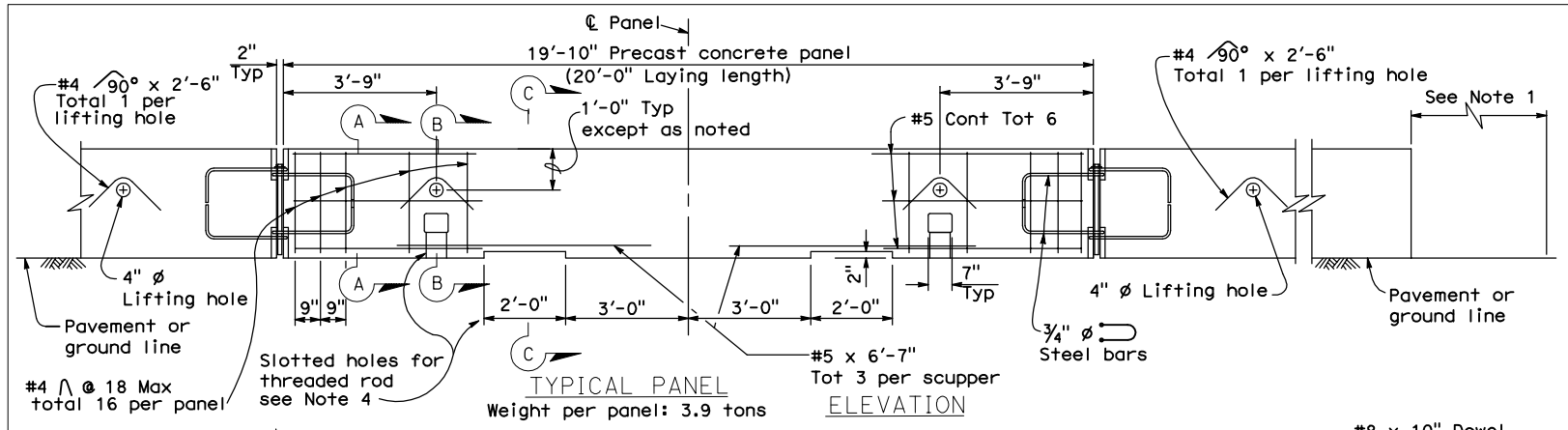

TYPICAL PANEL
Weight per panel: 3.9 tons
ELEVATION

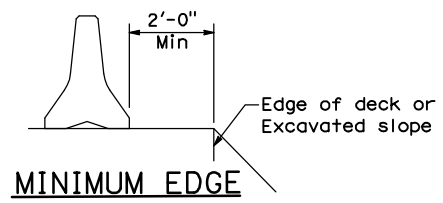

MINIMUM EDGE DISTANCE
See Note 4

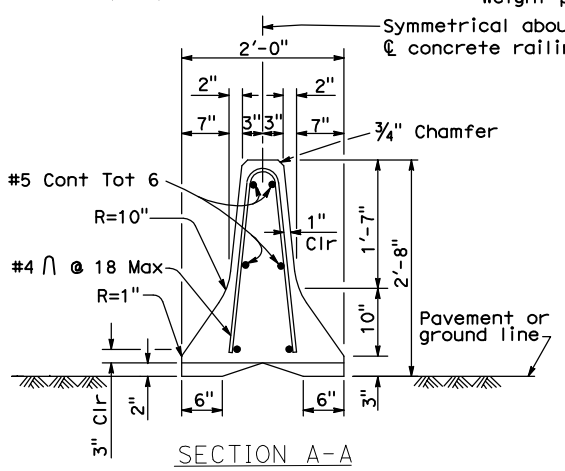

SECTION A-A

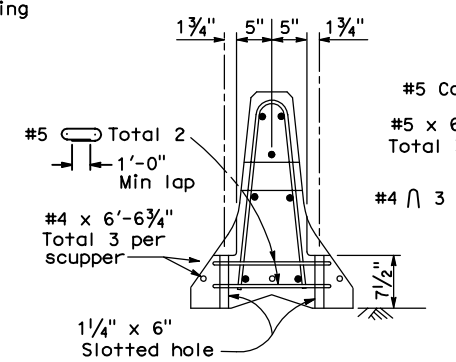

SECTION B-B

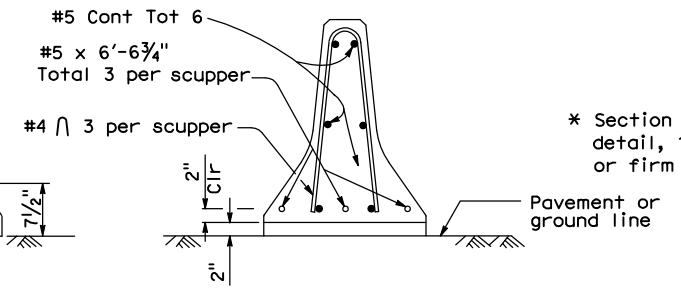

SECTION C-C

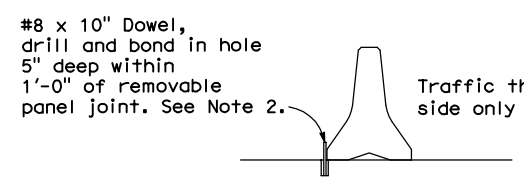

SECTION G-G *

* Section G-G is for concrete pavement. Alternative detail, 1" ø pins 2'-0" long driven in AC or firm soil permitted, minimum 1'-6" deep.

NOTES:

1. For end treatment, layout and crash cushions, where needed, see Project Plans or Special Provisions.
2. All 3½" gaps at removable panels are to be backed at the base with #8 x 10" dowel or 1" ø pin each side of joint. See Section G-G.
3. Where Temporary Railing (Type K) is placed on curves and radii that are too severe to connect panels with bolted joints, the railing is to be backed continuously with earth fill. See Section F-F.
4. Where the offset distance from the exposed edge of deck to the closest edge of the temporary railing is less than 2'-0", attach each panel to deck slab with 1" diameter threaded rods (total four per panel) inserted through the slotted holes of the panel and bond in drilled holes 6" deep in the deck slabs. See "Bridge Memo to Designers" Manual.

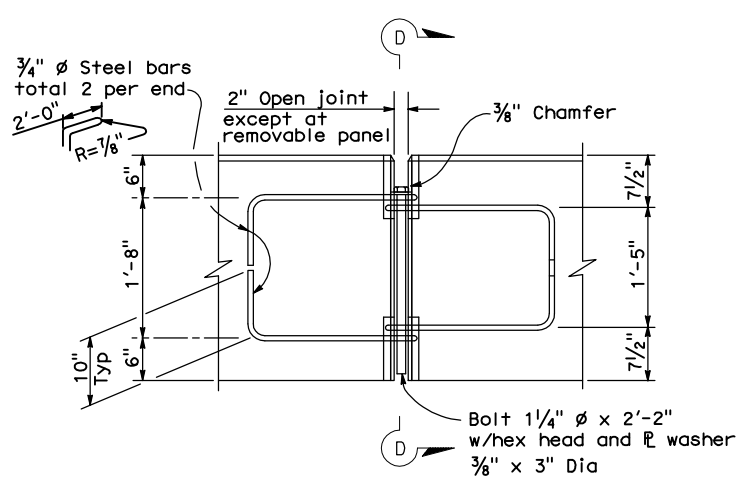

ELEVATION

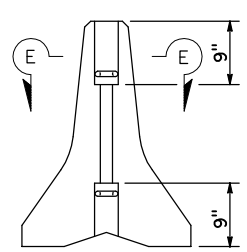

VIEW D-D

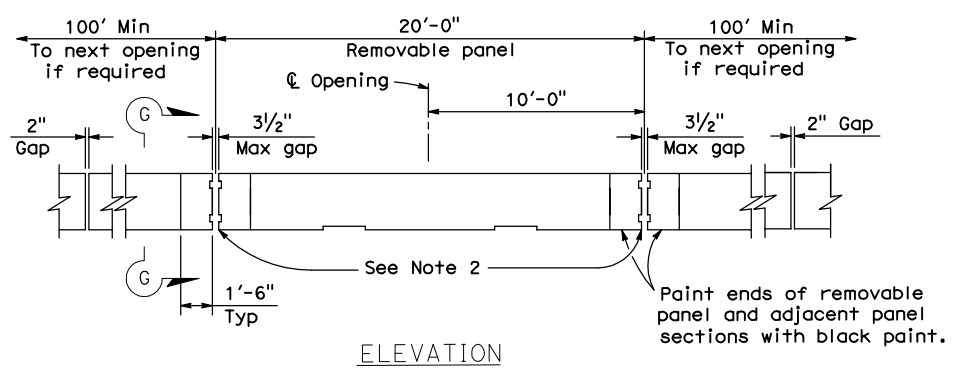

ELEVATION

TYPICAL OPENING DETAIL

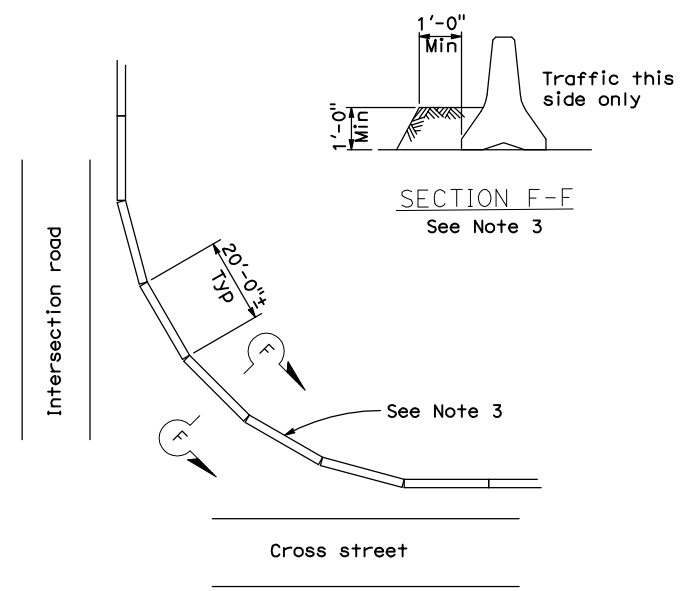

SECTION F-F
See Note 3

CURVED LAYOUT

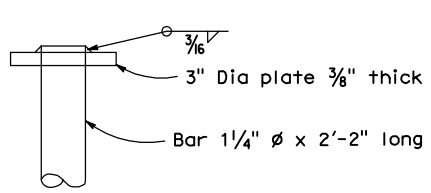

ALTERNATIVE HEAD DETAIL

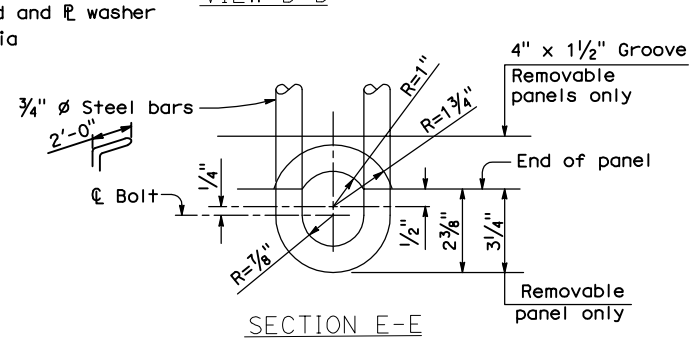

SECTION E-E

BOLT CONNECTION DETAIL

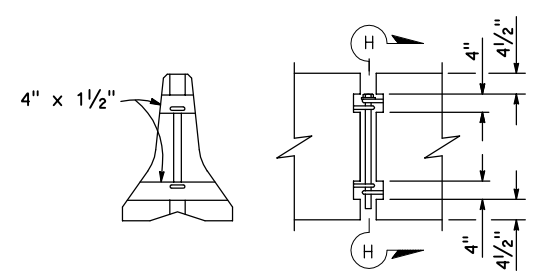

SECTION H-H ELEVATION

REMOVABLE PANEL GROOVE DETAILS

STATE OF CALIFORNIA
DEPARTMENT OF TRANSPORTATION

TEMPORARY RAILING (TYPE K)

NO SCALE

T3

2006 STANDARD PLAN T3

11-8-05

COPYRIGHT 2009 by PROVOST & PRITCHARD
ALL RIGHTS RESERVED
The firm of Provost & Pritchard Engineering Group, Inc. expressly reserves its common law copyright and other property rights in these plans. These plans are not to be reproduced, changed, or copied in any form or manner whatsoever, nor are they to be assigned to any third party without first obtaining the written permission and consent of Provost & Pritchard Engineering Group, Inc. In the event of unauthorized reuse of these plans by a third party, the third party shall hold the firm of Provost & Pritchard Engineering Group, Inc. harmless, and shall defend and indemnify the firm of Provost & Pritchard Engineering Group, Inc.'s legal fees associated with defending and enforcing these rights.

The State of California or its officers or agents shall not be responsible for the accuracy or completeness of electronic copies of this plan sheet.

To get to the Caltrans web site, go to: http://www.dot.ca.gov

No.	REVISION	BY	DATE

PRELIMINARY
NOT FOR CONSTRUCTION
09/28/2009

TULE RIVER INTERTIE PROJECT
LOWER TULE RIVER IRRIGATION DISTRICT
TULARE COUNTY, CA

STATE HIGHWAY 190
TRAFFIC CONTROL PLAN 2

PROVOST & PRITCHARD
ESTD. 1945
ENGINEERING & ECOLOGY
An Employee Owned Company
130 NORTH GARDEN ST.
VISALIA, CALIFORNIA 93291-6362
559/636-1166 FAX 559/636-1177
www.ppeng.com

DESIGN ENGINEER: DENNIS MILLS
LICENSE NO: CE 67,478
DRAFTED BY: JAB
CHECKED BY: DRM
SCALE: AS SHOWN
DATE: 9/22/09
JOB NO: 147708V1
DWG. NO:
SHEET
ST20b OF 63

10/20/2009 1:42 PM V:\Clients\LTRID - 1477\147707V1-Tule Intertie\dwg\SHEET\20160501-DT-10-AVE144-04.dwg -Mike A. Porter

NOTES:

Unless otherwise specified in the special provisions, all temporary warning signs shall have black legend on orange background.

California code are designated by (CA). Otherwise, Federal (MUTCD) codes are shown.

The State of California or its officers or agents shall not be responsible for the accuracy or completeness of electronic copies of this plan sheet.

To get to the Caltrans web site, go to: http://www.dot.ca.gov

TYPICAL LANE CLOSURE WITH REVERSIBLE CONTROL

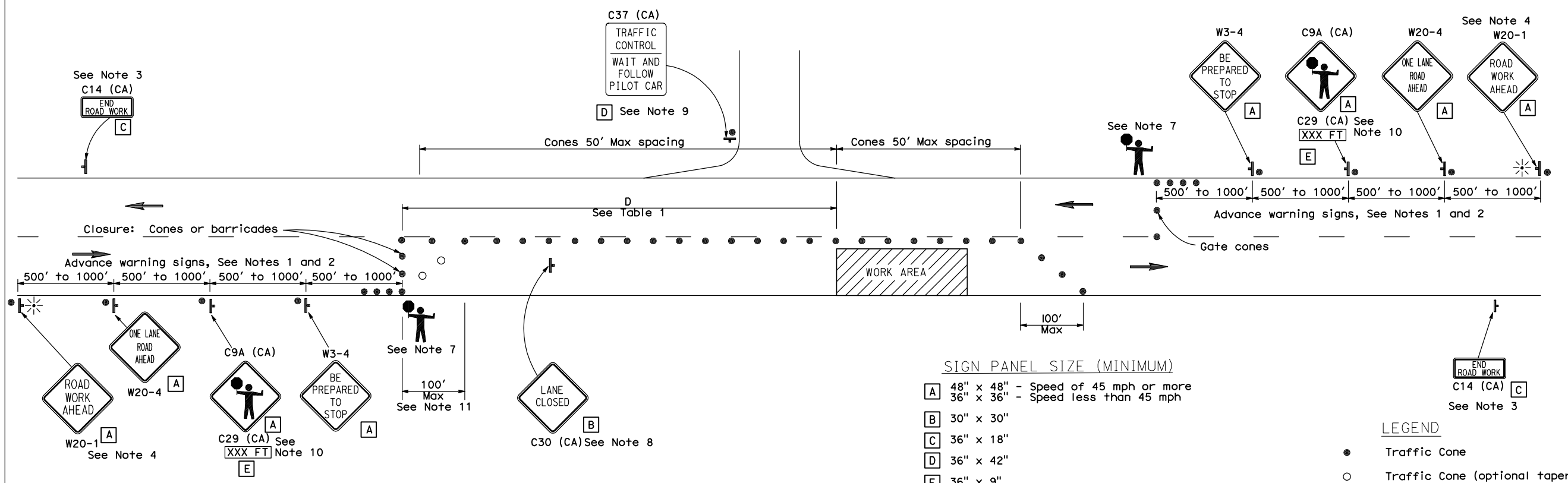

SIGN PANEL SIZE (MINIMUM)

- A 48" x 48" - Speed of 45 mph or more
  36" x 36" - Speed less than 45 mph
- B 30" x 30"
- C 36" x 18"
- D 36" x 42"
- E 36" x 9"

LEGEND

- Traffic Cone
- Traffic Cone (optional taper)
- Temporary Sign
- Direction of Travel
- Portable Flashing Beacon
- Flagger

NOTES:

1. Where approach speeds are low, advance warning signs may be placed at 300' spacing, and closer in urban areas.
2. Each advance warning sign in each direction of travel shall be equipped with at least two flags for daytime closure. Each flag shall be at least 16" x 16" in size and shall be orange or fluorescent red-orange in color. Flashing beacons shall be placed at the locations indicated for lane closure during hours of darkness.
3. A C14 (CA) "END ROAD WORK" sign, as appropriate, shall be placed at the end of the lane control unless the end of work area is obvious, or ends within a larger project's limits.
4. If the W20-1 sign would follow within 2000' of a stationary W20-1 or C11 (CA) "ROAD WORK NEXT _____ MILES", use a W20-4 sign for the first advance warning sign.
5. All cones used for lane closures during the hours of darkness shall be fitted with retroreflective bands (or sleeves) as specified in the specifications.
6. Portable delineators, placed at one-half the spacing indicated for traffic cones, may be used instead of cones for daytime closures only.
7. Additional advance flaggers may be required. Flagger should stand in a conspicuous place, be visible to approaching traffic as well as approaching vehicles after the first vehicle has stopped. During the hours of darkness, the flagging-station and flagger shall be illuminated and clearly visible to approaching traffic. The illumination footprint of the lighting on the ground shall be at least 20' in diameter. Place a minimum of four cones at 50' intervals in advance of flagger station as shown.
8. Place C30 (CA) "LANE CLOSED" sign at 500' to 1000' intervals throughout extended work areas. They are optional if the work area is visible from the flagger station.
9. When a pilot car is used, place a C37 (CA) "TRAFFIC CONTROL-WAIT AND FOLLOW PILOT CAR" sign at all intersections within traffic control area. Signs shall be clean and visible at all times.
10. An optional C29 (CA) sign may be placed below the C9A (CA) sign.
11. Traffic cones or barricades may be placed on the optional taper as shown, barricades shall be Type I, II, or III.

TABLE 1

Approach Speed	Minimum D	Downgrade Minimum D *		
		-3%	-6%	-9%
mph	ft	ft	ft	ft
25 and below	155	158	165	173
30	200	205	215	227
35	250	257	271	287
40	305	315	333	354
45	360	378	400	427
50	425	446	474	507
55	495	520	553	593
60	570	598	638	686
65	645	682	728	785

* Use on sustained downgrade steeper than -3 percent and longer than 1 mile.

STATE OF CALIFORNIA
DEPARTMENT OF TRANSPORTATION

TRAFFIC CONTROL SYSTEM FOR LANE CLOSURE ON TWO LANE CONVENTIONAL HIGHWAYS

NO SCALE

T13

9-28-05

2006 STANDARD PLAN T13

COPYRIGHT 2009 by PROVOST & PRITCHARD
ALL RIGHTS RESERVED
The firm of Provost & Pritchard Engineering Group, Inc. expressly reserves its common law copyright and other property rights in these plans. These plans are not to be reproduced, changed, or copied in any form or manner whatsoever, nor are they to be assigned to any third party without first obtaining the written permission and consent of Provost & Pritchard Engineering Group, Inc. In the event of unauthorized reuse of these plans by a third party, the third party shall hold the firm of Provost & Pritchard Engineering Group, Inc. harmless, and shall defend and indemnify Provost & Pritchard Engineering Group, Inc.'s legal fees associated with defending and enforcing these rights.

No.	REVISION	BY	DATE

PRELIMINARY
NOT FOR CONSTRUCTION
09/28/2009

TULE RIVER INTERTIE PROJECT
LOWER TULE RIVER IRRIGATION DISTRICT
TULARE COUNTY, CA

STATE HIGHWAY 190
TRAFFIC CONTROL PLAN 3

PROVOST & PRITCHARD
EST. 1945
ENGINEERING GROUP
An Employee Owned Company
130 NORTH GARDEN ST.
VISALIA, CALIFORNIA 93291-6362
559/636-1166 FAX 559/636-1177
www.ppeng.com

DESIGN ENGINEER: DENNIS MILLS
LICENSE NO: CE 67,478
DRAFTED BY: JAB
CHECKED BY: DRM
SCALE: AS SHOWN
DATE: 9/22/09
JOB NO: 147708V1
DWG. NO:
SHEET
ST20c OF 63

10/20/2009 1:42 PM V:\Clients\LTRID - 1477\147707V1-Tule Intertie\dwg\SHEET\20160501-DT-10-AVE144-05.dwg -Mike A. Porter

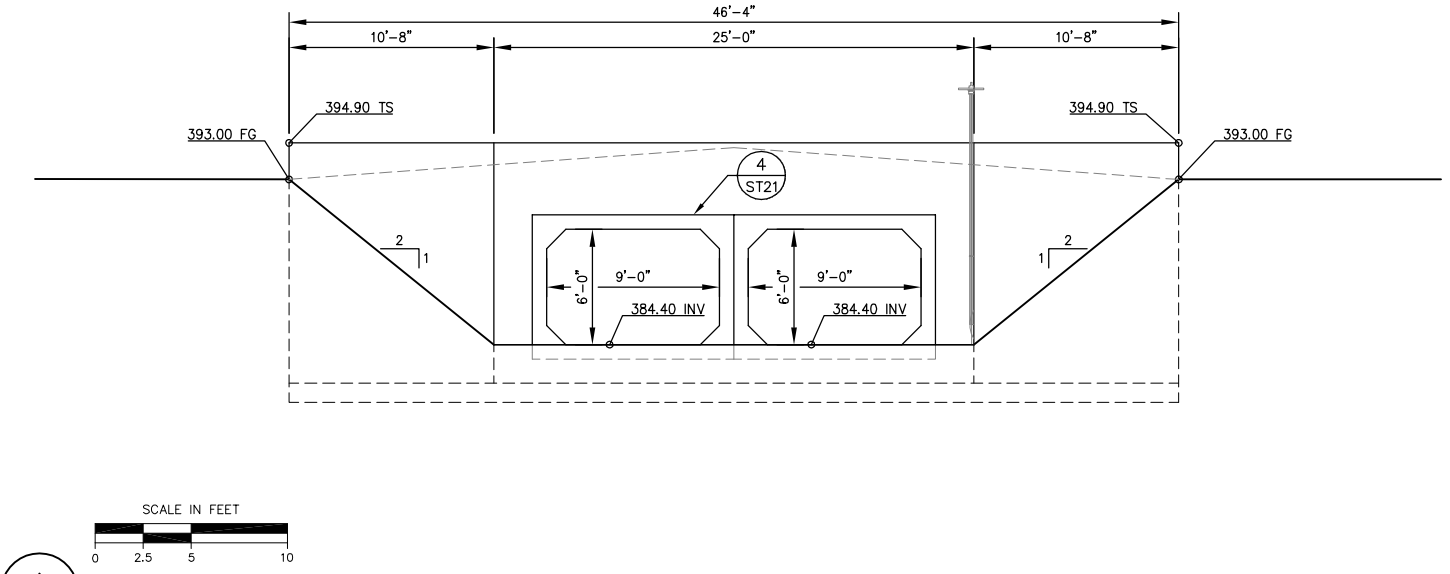

A
ST21

SECTION A

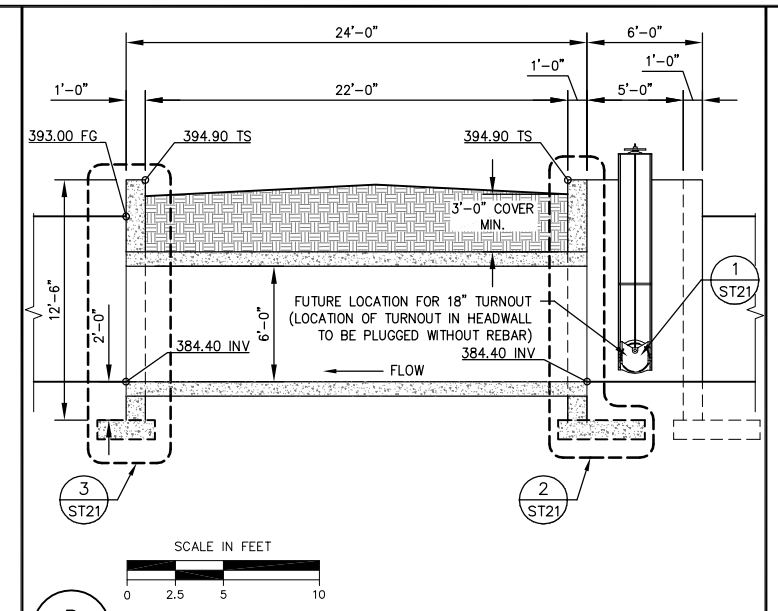

B
ST21

SECTION B

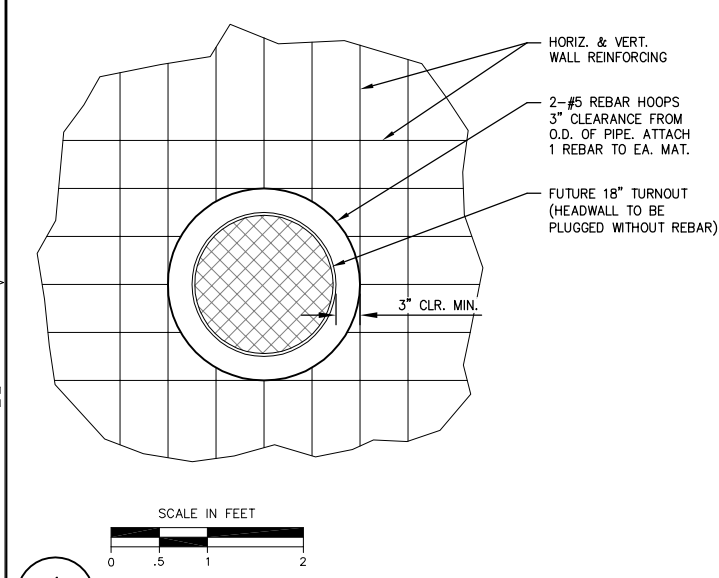

1
ST21

FUTURE TURNOUT REINFORCING

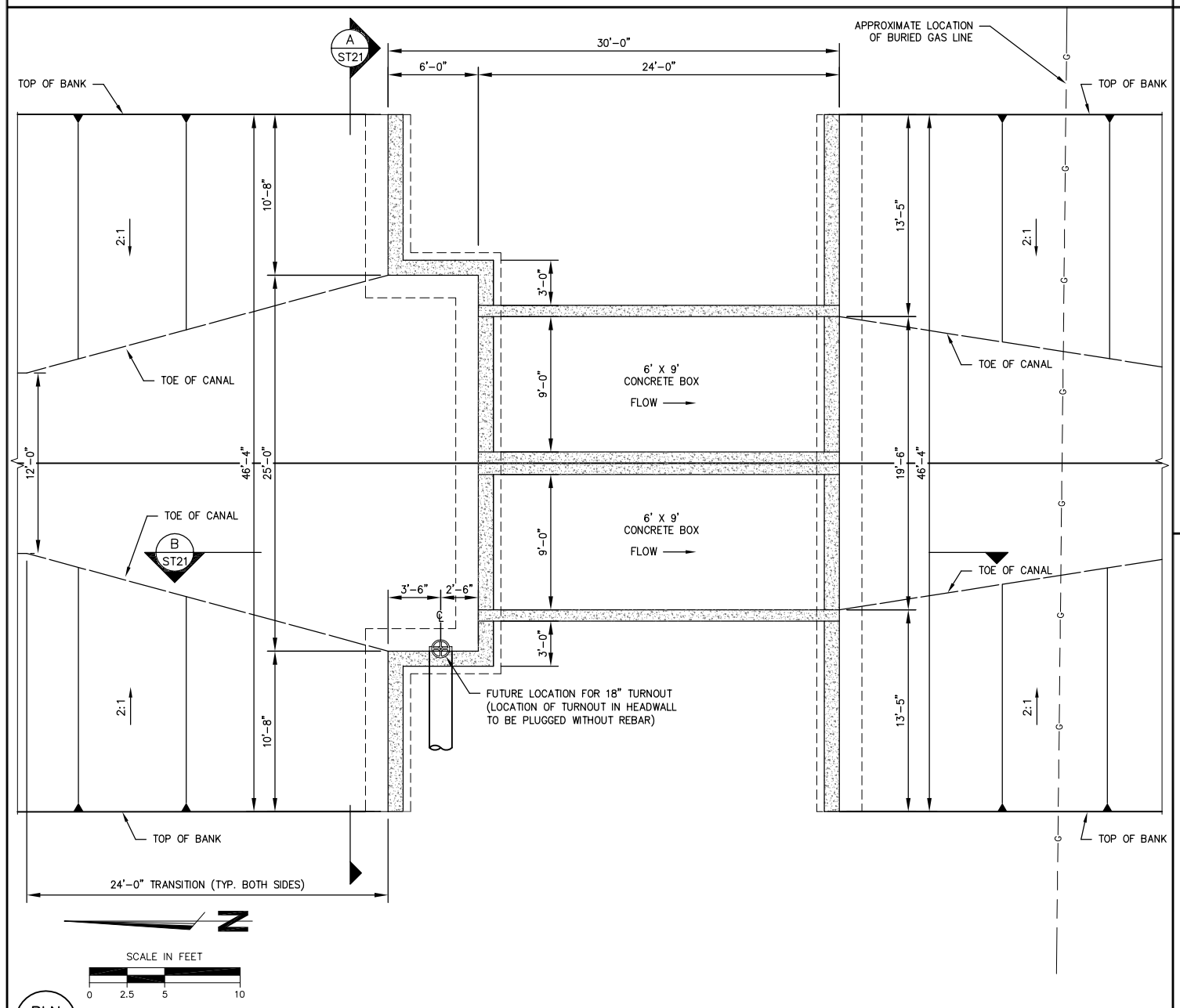

PLN
ST21

PLAN VIEW

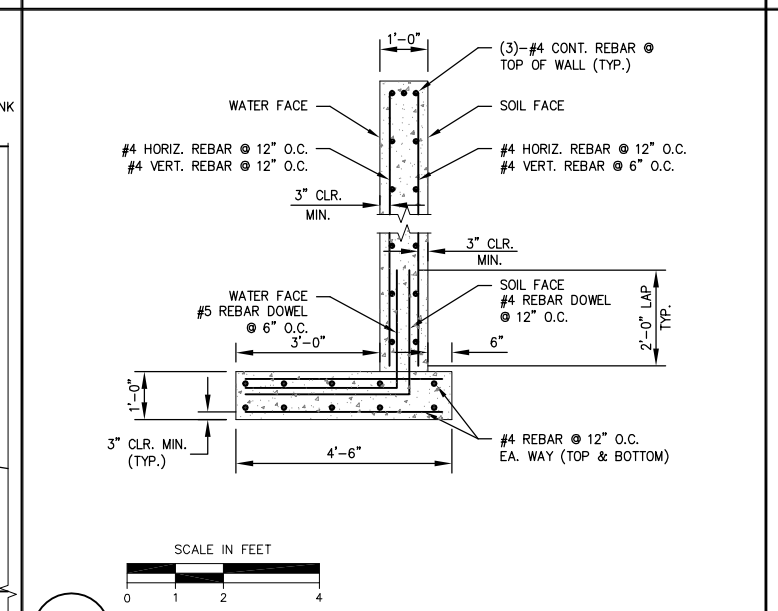

2
ST21

UPSTREAM HEADWALL REINFORCING

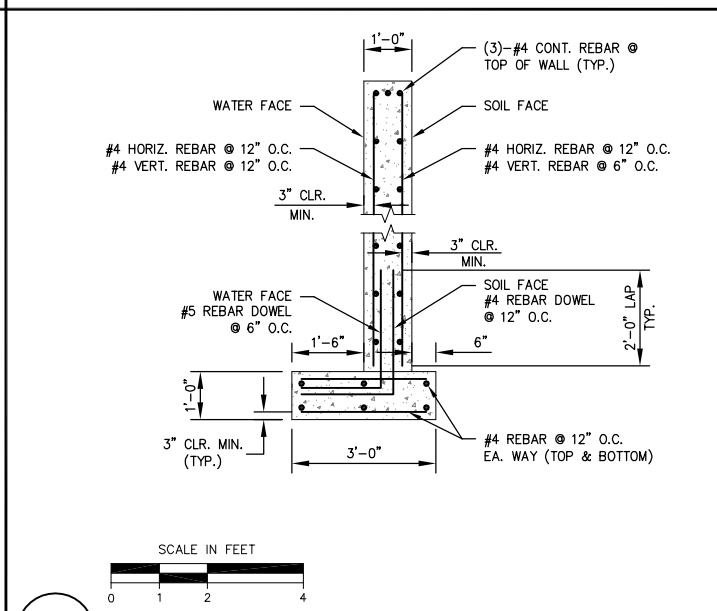

3
ST21

DOWNSTREAM RETAINING WALL REINFORCING

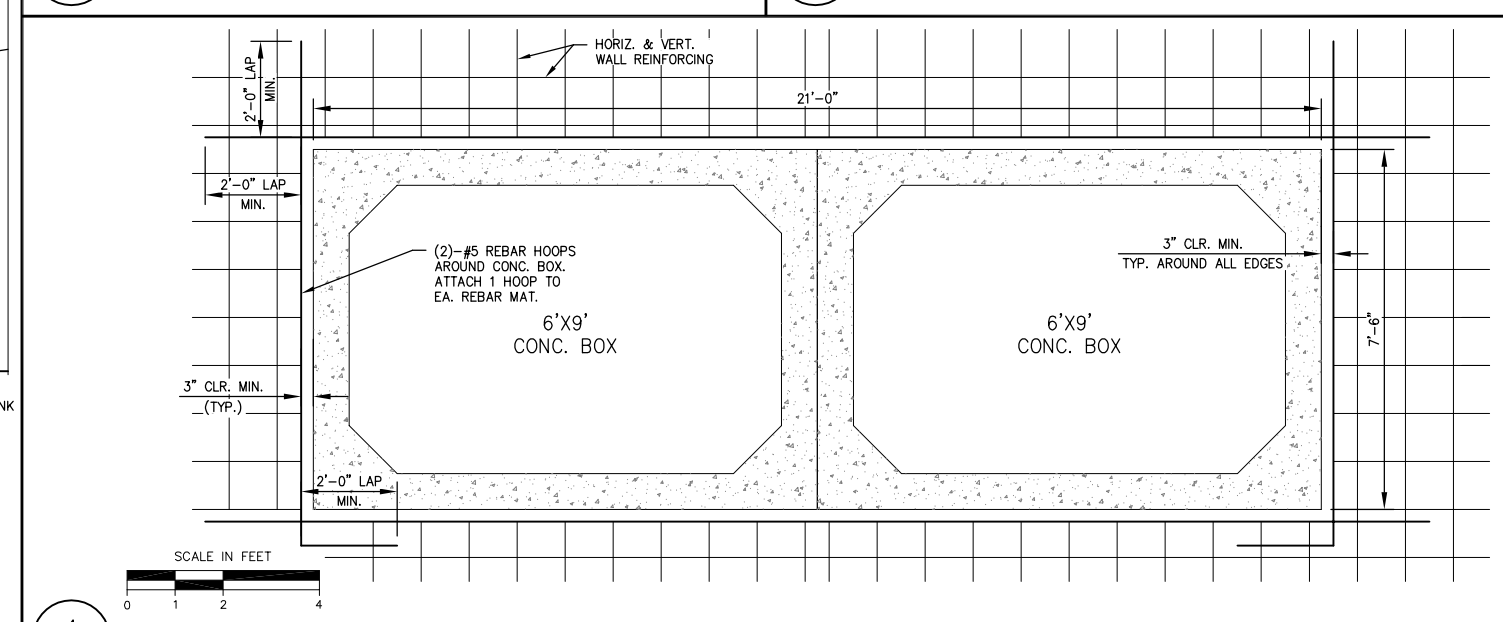

4
ST21

6' X 9' CONCRETE BOX OPENING REINFORCING

COPYRIGHT 2008 by PROVOST & PRITCHARD ENGINEERING GROUP, INC. ALL RIGHTS RESERVED. The firm of Provost & Pritchard Engineering Group, Inc. expressly reserves its common law copyright and other property rights in these plans. These plans are not to be reproduced, changed, or copied in any form or manner whatsoever, nor are they to be assigned to any third party without first obtaining the written permission and consent of Provost & Pritchard Engineering Group, Inc. In the event of unauthorized reuse of these plans by a third party, the third party shall hold the firm of Provost & Pritchard Engineering Group, Inc. harmless, and shall defend and indemnify Provost & Pritchard Engineering Group, Inc.'s legal fees associated with defending and enforcing these rights.

PRELIMINARY
NOT FOR CONSTRUCTION
09/28/2009

No.	REVISION	BY	DATE

REGISTERED PROFESSIONAL ENGINEER DENNIS R. MILLS No. 67478 EXPIRES: 6/30/09 Civil STATE OF CALIFORNIA

DATE SIGNED:

TULE RIVER INTERTIE PROJECT
LOWER TULE RIVER IRRIGATION DISTRICT
TULARE COUNTY, CA

AVE 140 CROSSING

EST. 1945
PROVOST & PRITCHARD
ENGINEERING & GIS GROUP
An Employee Owned Company
130 NORTH GARDEN ST.
VISALIA, CALIFORNIA 93291-6362
559/636-1166 FAX 559/636-1177
www.pperg.com

DESIGN ENGINEER: DENNIS MILLS	
LICENSE NO: CE 67,478	
DRAFTED BY: JAB	CHECKED BY: DRM
SCALE: AS SHOWN	
DATE: 9/22/09	
JOB NO: 147708V1	
DWG. NO:	
SHEET ST21 OF 63	

10/20/2009 1:42 PM V:\Clients\LTRID - 1477\147707V1-Tule Intertie\dwg\SHEET\20160501-DT-11-AVE140-01.dwg -Mike A. Porter

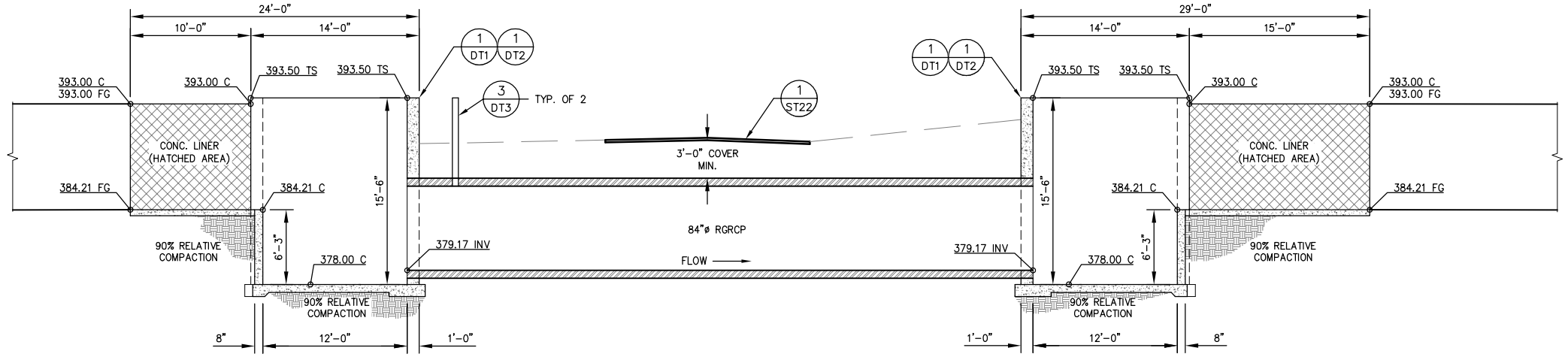

A
ST22

SECTION A

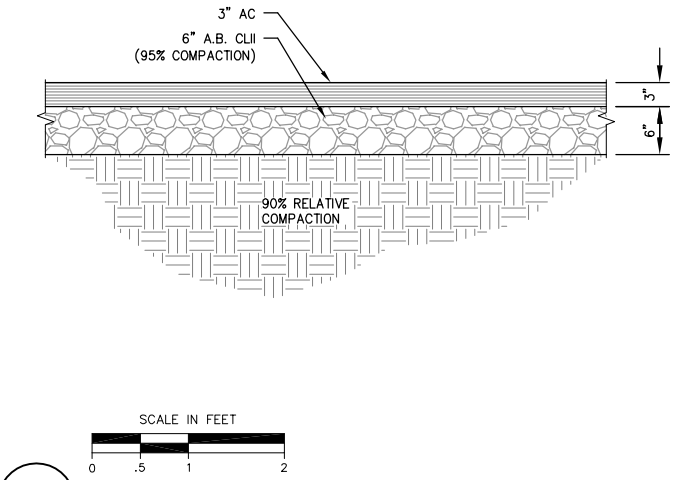

1
ST22

PAVEMENT SECTION

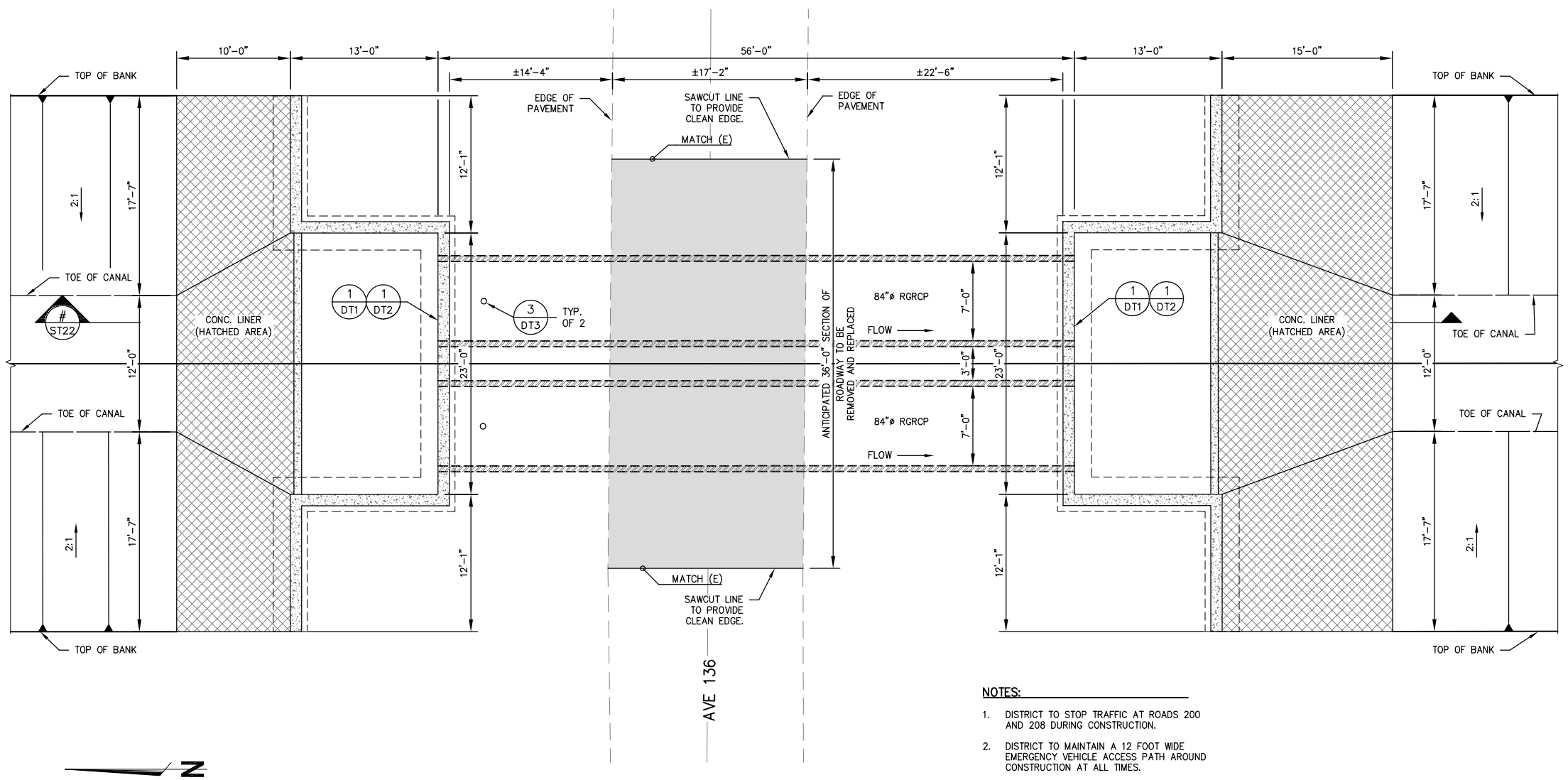

PLN
ST22

PLAN VIEW

NOTES:

1. DISTRICT TO STOP TRAFFIC AT ROADS 200 AND 208 DURING CONSTRUCTION.
2. DISTRICT TO MAINTAIN A 12 FOOT WIDE EMERGENCY VEHICLE ACCESS PATH AROUND CONSTRUCTION AT ALL TIMES.

COPYRIGHT 2008 by PROVOST & PRITCHARD
ALL RIGHTS RESERVED
The firm of Provost & Pritchard Engineering Group, Inc. expressly reserves its common law copyright and other property rights in these plans. These plans are not to be reproduced, changed, or copied in any form or manner whatsoever, nor are they to be assigned to any third party without first obtaining the written permission and consent of Provost & Pritchard Engineering Group, Inc. In the event of unauthorized reuse of these plans by a third party, the third party shall hold the firm of Provost & Pritchard Engineering Group, Inc. harmless, and shall indemnify the firm of Provost & Pritchard Engineering Group, Inc.'s legal fees associated with defending and enforcing these rights.

PRELIMINARY
NOT FOR CONSTRUCTION
09/28/2009

No.	REVISION	BY	DATE

REGISTERED PROFESSIONAL ENGINEER
DENNIS R. MILLS
No. 67478
EXPIRES: 6/30/11
Civil
STATE OF CALIFORNIA

DATE SIGNED:

TULE RIVER INTERTIE PROJECT
LOWER TULE RIVER IRRIGATION DISTRICT
TULARE COUNTY, CA

AVE 136 CROSSING

EST. 1963
PROVOST & PRITCHARD
ENGINEERING GROUP
An Employee Owned Company
130 NORTH GARDEN ST.
VISALIA, CALIFORNIA 93291-6362
559/636-1166 FAX 559/636-1177
www.ppeng.com

DESIGN ENGINEER: DENNIS MILLS	
LICENSE NO: CE 67,478	
DRAFTED BY: JAB	CHECKED BY: DRM
SCALE: AS SHOWN	
DATE: 9/22/09	
JOB NO: 147708V1	
DWG. NO:	
SHEET ST22 OF 63	

10/20/2009 1:42 PM V:\Clients\LTRID - 1477\147707V1-Tule Intertie\dwg\SHEET\20160501-DT-12-AVE136.dwg -Mike A. Porter

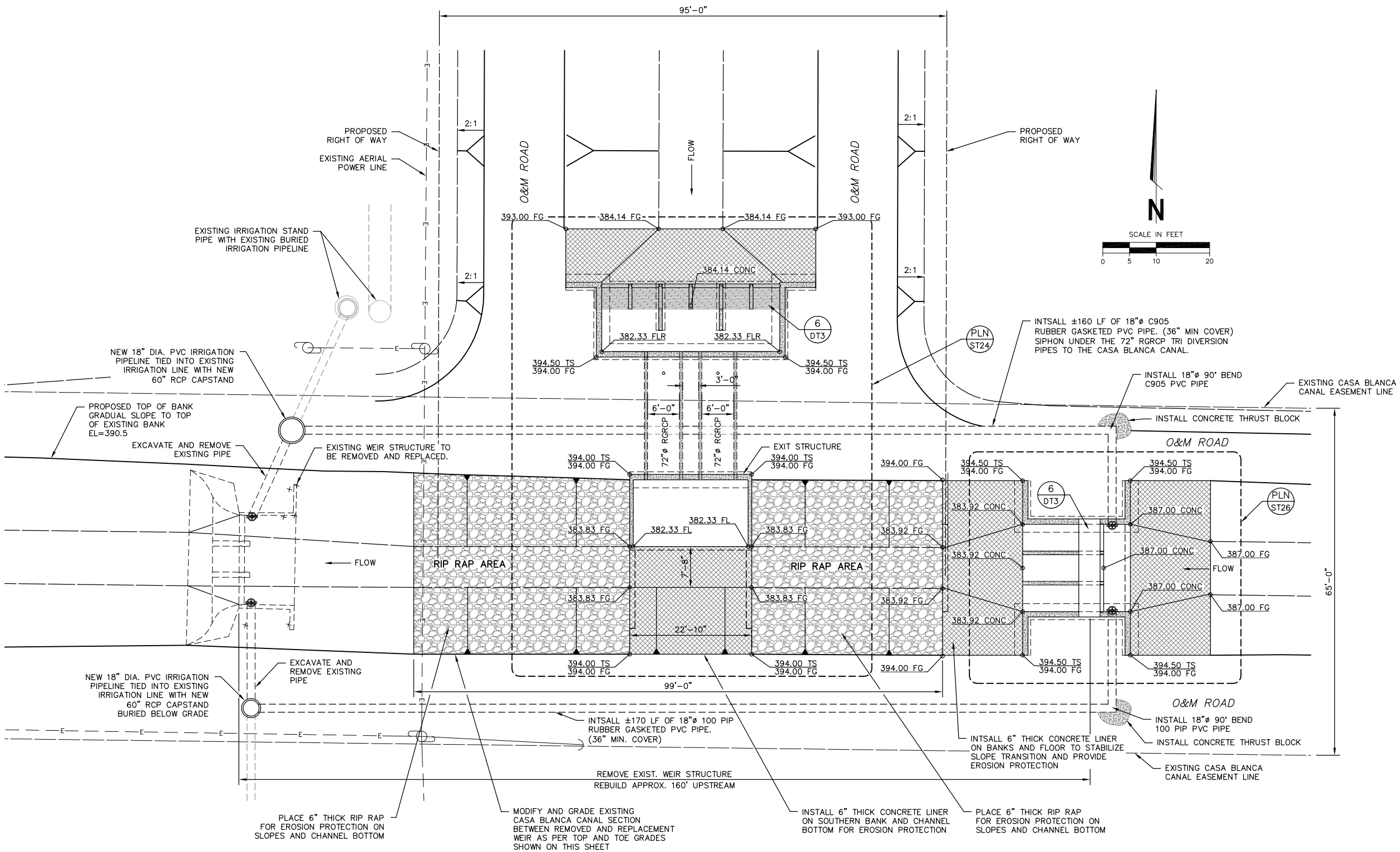

1 TURNOUT STRUCTURE GRADING
ST23 SCALE: 1" = 10'

811 Know what's below. Call before you dig.

COPYRIGHT 2008 by PROVOST & PRITCHARD
ALL RIGHTS RESERVED
The firm of Provost & Pritchard Engineering Group, Inc. expressly reserves its common law copyright and other property rights in these plans. These plans are not to be reproduced, changed, or copied in any form or manner whatsoever, nor are they to be assigned to any third party without first obtaining the written permission and consent of Provost & Pritchard Engineering Group, Inc. In the event of unauthorized reuse of these plans by a third party, the third party shall hold the firm of Provost & Pritchard Engineering Group, Inc. harmless, and shall reimburse the firm of Provost & Pritchard Engineering Group, Inc.'s legal fees associated with defending and enforcing these rights.

PRELIMINARY
NOT FOR CONSTRUCTION
09/28/2009

No.	REVISION	BY	DATE

REGISTERED PROFESSIONAL ENGINEER DENNIS R. MILLS No. 67478 EXPIRES: 6/30/11 Civil STATE OF CALIFORNIA

DATE SIGNED:

TULE RIVER INTERTIE PROJECT
LOWER TULE RIVER IRRIGATION DISTRICT
TULARE COUNTY, CA

CASA BLANCA NORTH CONNECTION 1

ESTD. 1948
PROVOST & PRITCHARD
ENGINEERING GROUP
An Employee Owned Company
130 NORTH GARDEN ST.
VISALIA, CALIFORNIA 93291-6362
559/636-1166 FAX 559/636-1177
www.ppeng.com

DESIGN ENGINEER: DENNIS MILLS
LICENSE NO: CE 67,478
DRAFTED BY: JAB
CHECKED BY: DRM
SCALE: AS SHOWN
DATE: 9/22/09
JOB NO: 147708V1
DWG. NO:
SHEET
ST23 OF 63

10/20/2009 1:42 PM V:\Clients\LTRID - 1477\147707V1-Tule Intertie\dwg\SHEET\20160501-DT-13-CASA-BLANCA-NORTH 1.dwg -Mike A. Porter

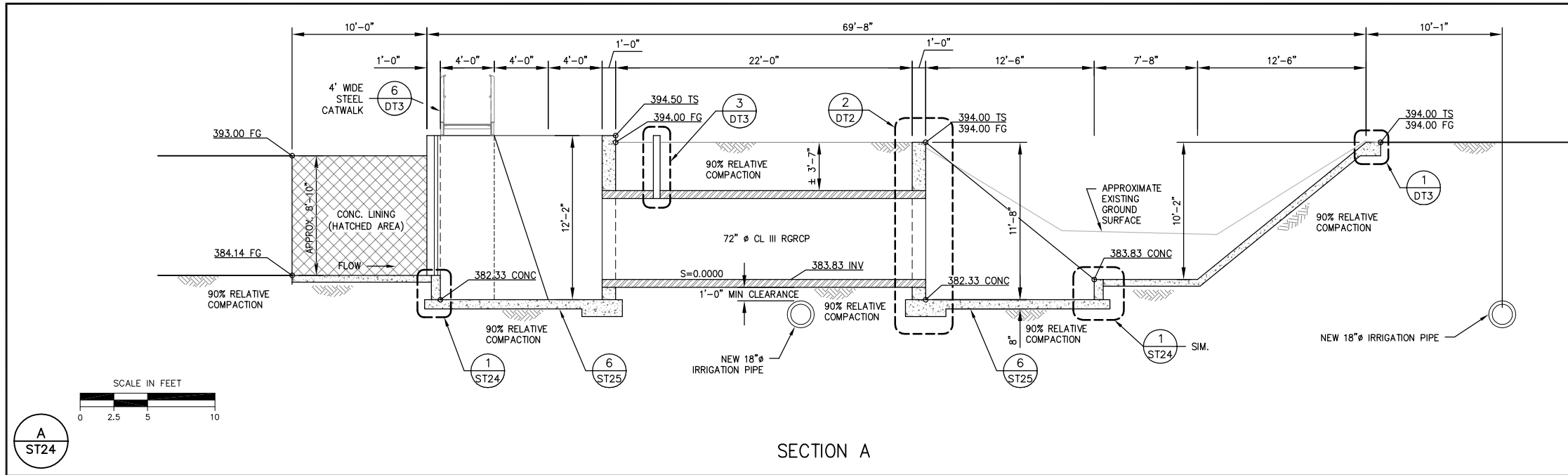

A ST24

SECTION A

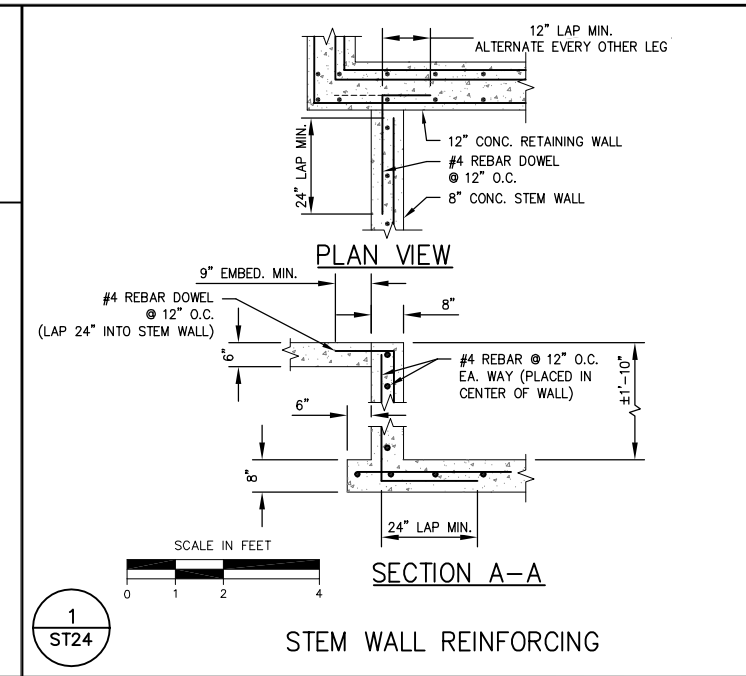

1 ST24

STEM WALL REINFORCING

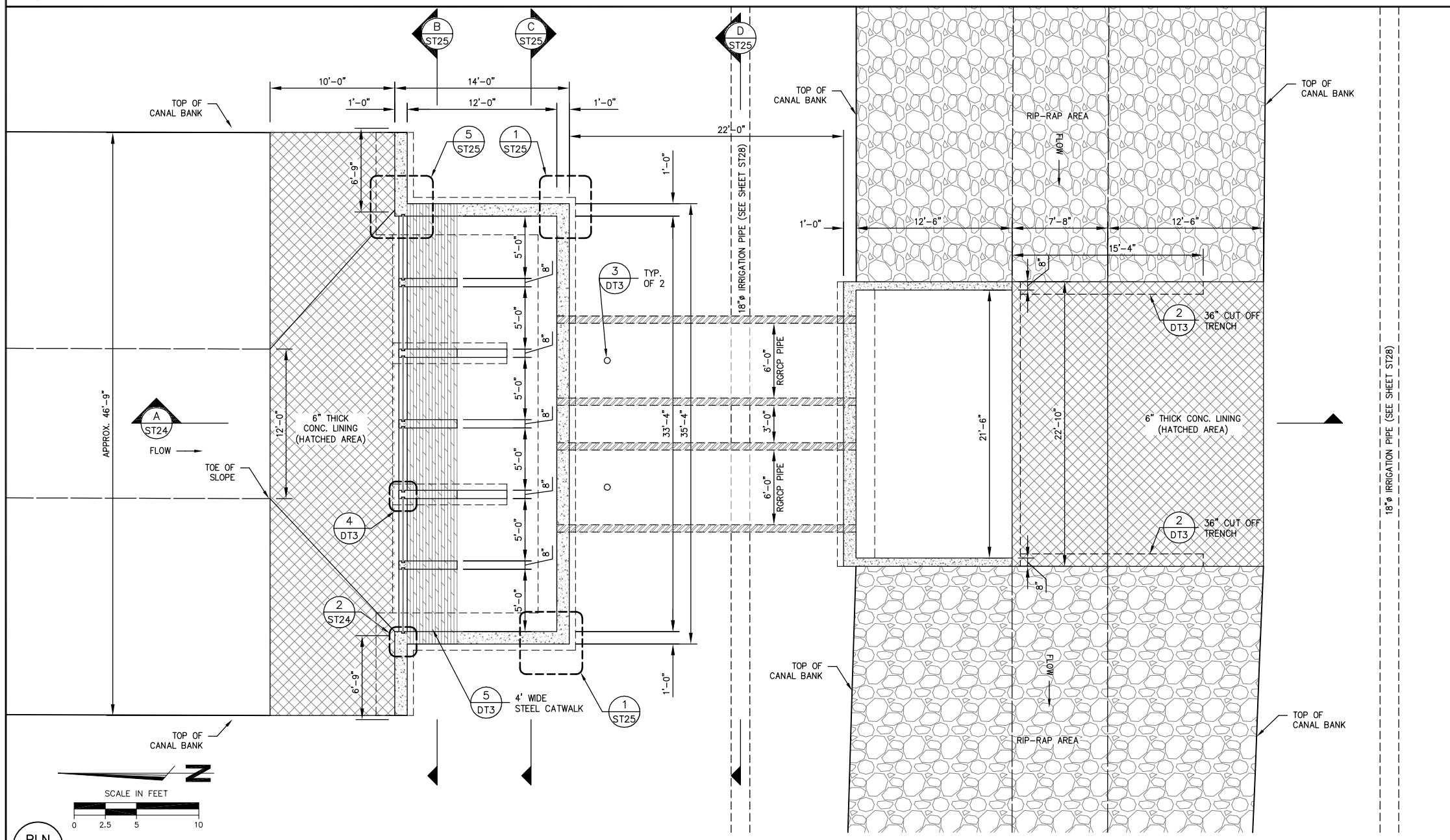

PLN ST24

PLAN VIEW

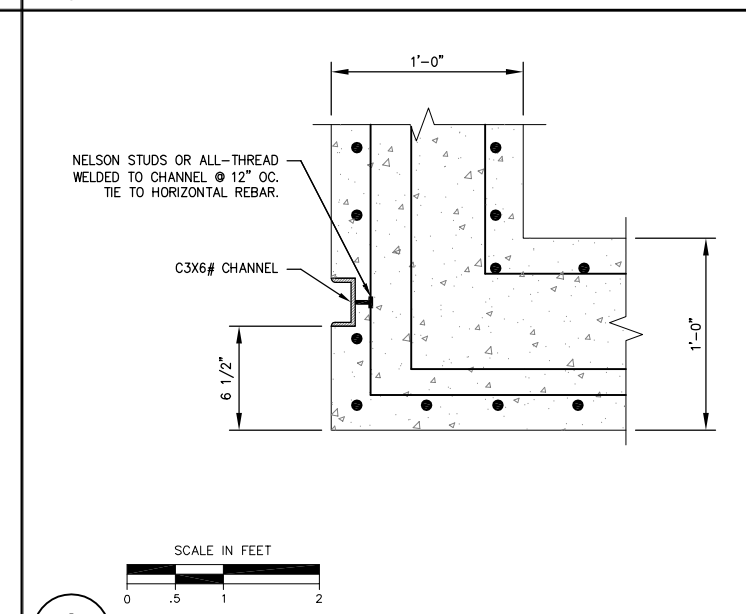

2 ST24

CHANNEL GUIDE REINFORCING DETAIL

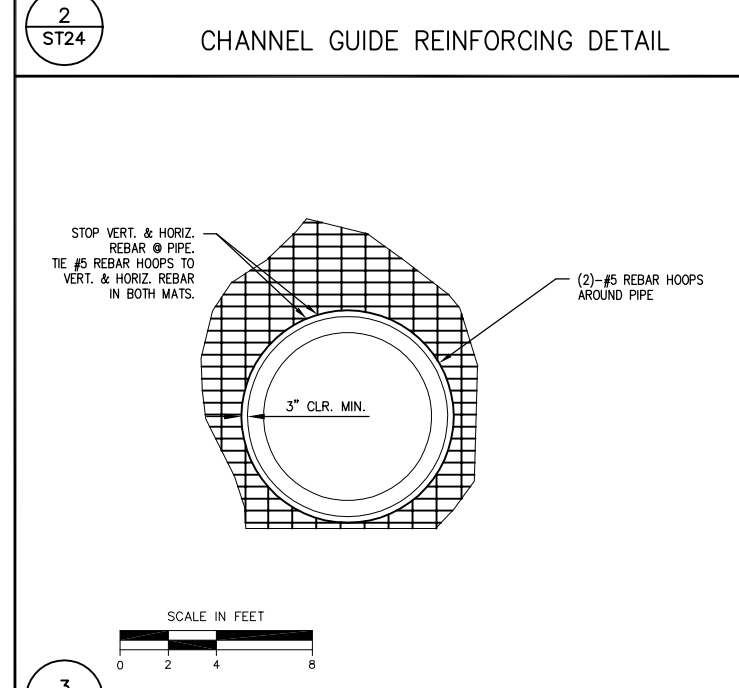

3 ST24

72" RGRCP STRUCTURE REINFORCING

COPYRIGHT 2009 by PROVOST & PRITCHARD ENGINEERING GROUP, INC. ALL RIGHTS RESERVED
The firm of Provost & Pritchard Engineering Group, Inc. expressly reserves its common law copyright and other property rights in these plans. These plans are not to be reproduced, changed, or copied in any form or manner whatsoever, nor are they to be assigned to any third party without first obtaining the written permission and consent of Provost & Pritchard Engineering Group, Inc. In the event of unauthorized reuse of these plans by a third party, the third party shall hold the firm of Provost & Pritchard Engineering Group, Inc. harmless, and shall defend and indemnify the firm of Provost & Pritchard Engineering Group, Inc.'s legal fees associated with defending and enforcing these rights.

No.	REVISION	BY	DATE

PRELIMINARY
NOT FOR CONSTRUCTION
09/28/2009

REGISTERED PROFESSIONAL ENGINEER DENNIS R. MILLS No. 67478 EXPIRES: 6/30/11 Civil STATE OF CALIFORNIA

DATE SIGNED: _____

TULE RIVER INTERTIE PROJECT
LOWER TULE RIVER IRRIGATION DISTRICT
TULARE COUNTY, CA

CASA BLANCA NORTH CONNECTION 2

EST. 1968
PROVOST & PRITCHARD ENGINEERING GROUP
An Employee Owned Company
130 NORTH GARDEN ST.
VISALIA, CALIFORNIA 93291-6362
559/636-1166 FAX 559/636-1177
www.ppeng.com

DESIGN ENGINEER: DENNIS MILLS	
LICENSE NO: CE 67,478	
DRAFTED BY: JAB	CHECKED BY: DRM
SCALE: AS SHOWN	
DATE: 9/22/09	
JOB NO: 14770BV1	
DWG. NO:	
SHEET ST24 OF 63	

10/20/2009 1:43 PM V:\Clients\LTRID - 1477\14770TV1-Tule Intertie\dwg\SHEET\20160501-DT-13-CASA-BLANCA-NORTH 2.dwg -Mike A. Porter

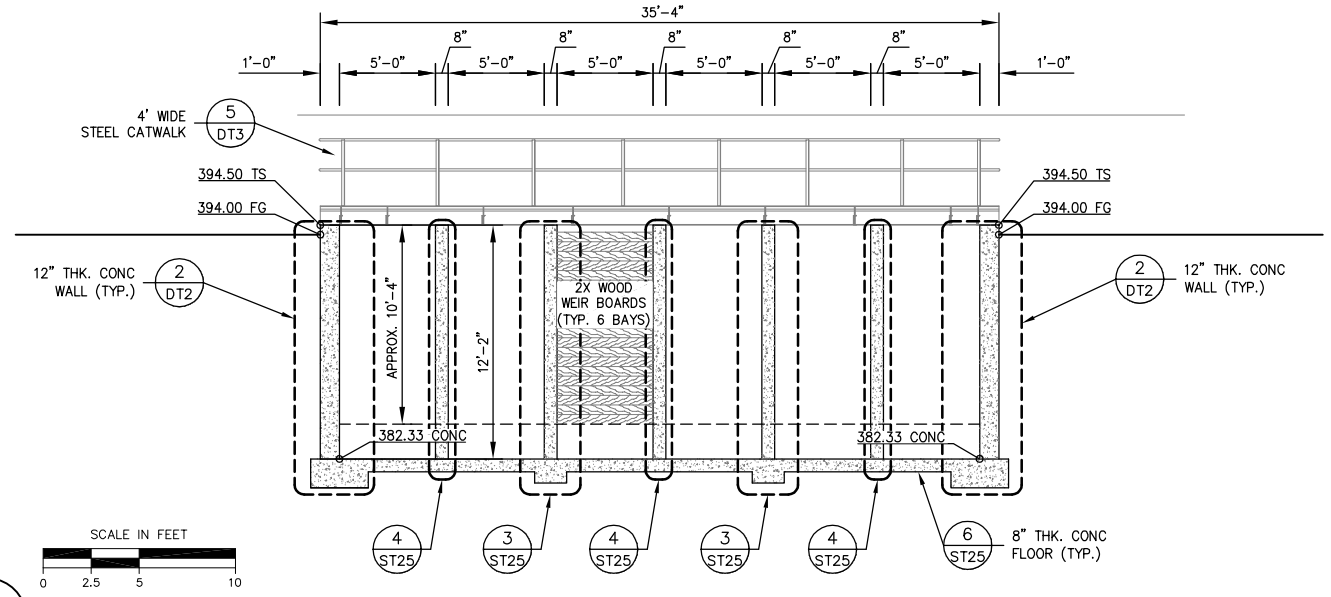

B ST25

SECTION B

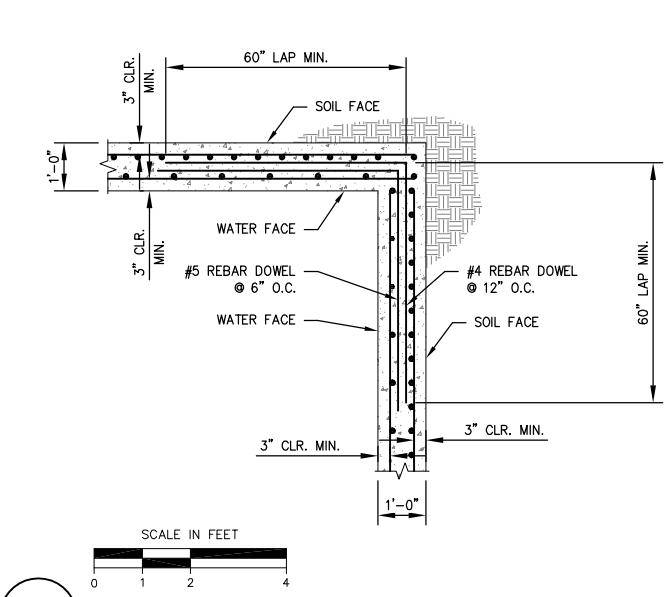

1 ST25

12" WALL CORNER REINFORCING

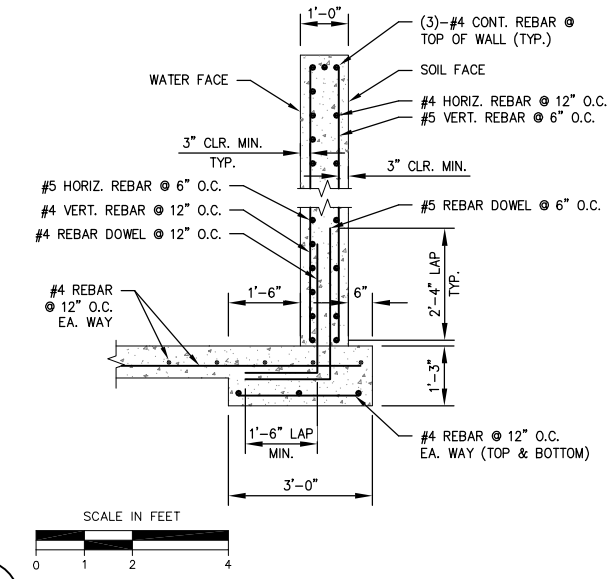

2 ST25

12" WALL REINFORCING

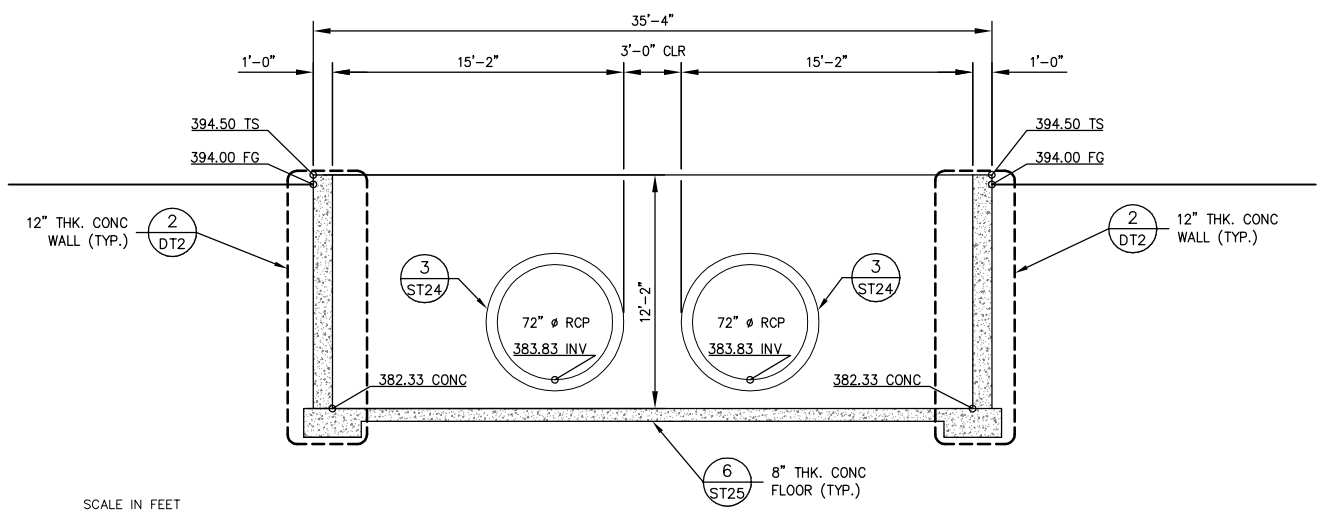

C ST25

SECTION C

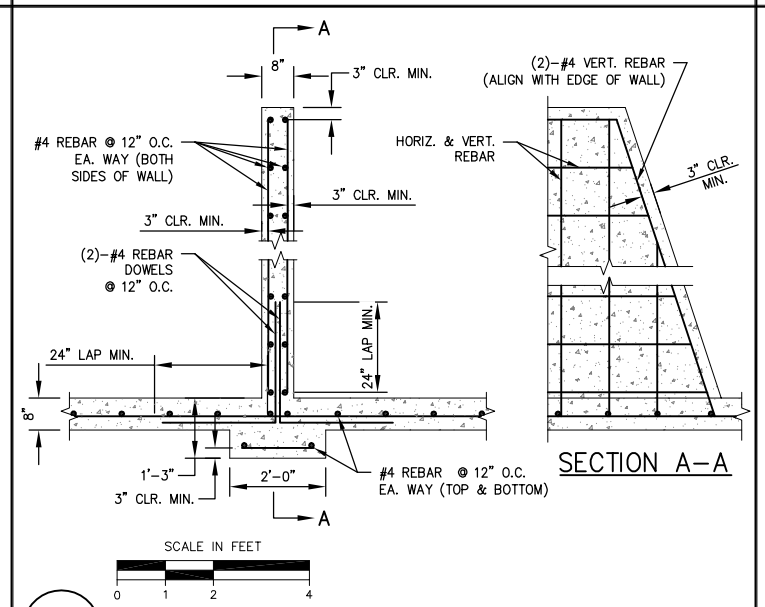

3 ST25

8" PIER WALL REINFORCING WITH FOOTING

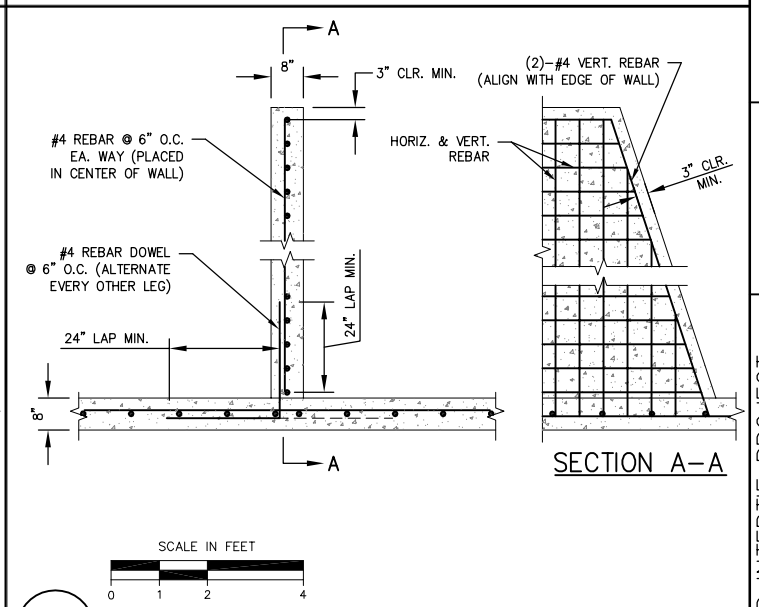

4 ST25

8" PIER WALL REINFORCING

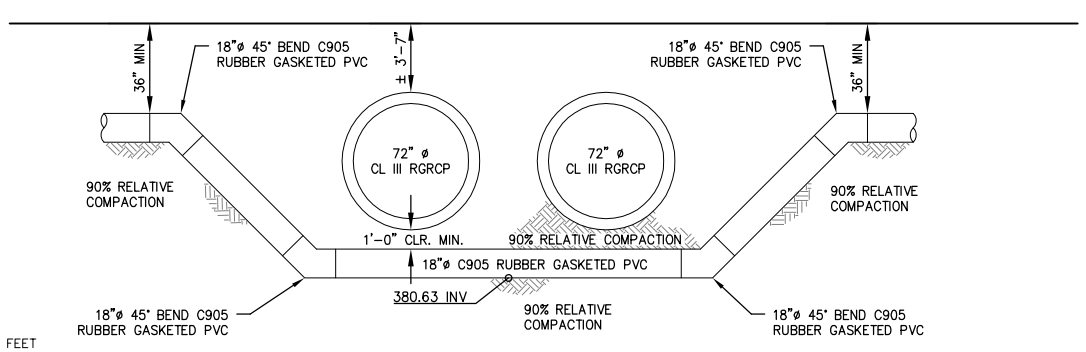

D ST25

SECTION D

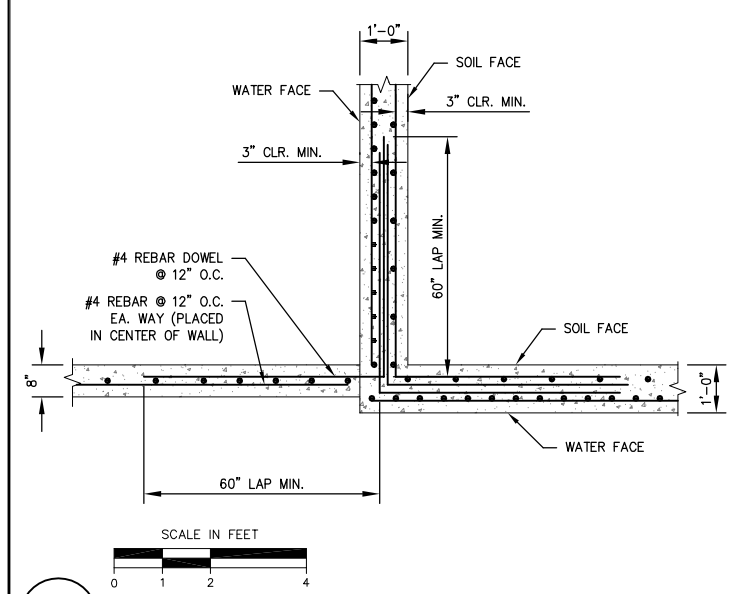

5 ST25

12" WALL-8" STEM WALL REINFORCING

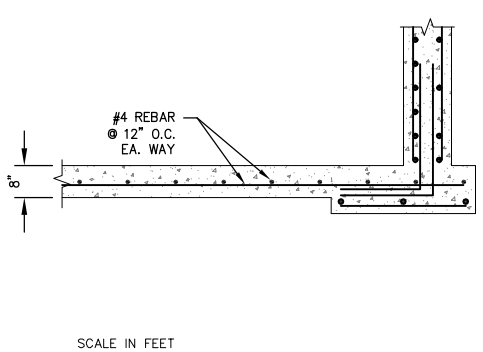

6 ST25

CONC. SLAB REINFORCING

COPYRIGHT 2008 by PROVOST & PRITCHARD ENGINEERING GROUP, INC. ALL RIGHTS RESERVED. The firm of Provost & Pritchard Engineering Group, Inc. expressly reserves its common law copyright and other property rights in these plans. These plans are not to be reproduced, changed, or copied in any form or manner whatsoever, nor are they to be assigned to any third party without first obtaining the written permission and consent of Provost & Pritchard Engineering Group, Inc. In the event of unauthorized reuse of these plans by a third party, the third party shall hold the firm of Provost & Pritchard Engineering Group, Inc. harmless, and shall defend and indemnify the firm of Provost & Pritchard Engineering Group, Inc.'s legal fees associated with defending and enforcing these rights.

PRELIMINARY
NOT FOR CONSTRUCTION
09/28/2009

No.	REVISION	BY	DATE

REGISTERED PROFESSIONAL ENGINEER — DENNIS R. MILLS — No. 67478 — EXPIRES: 6/30/11 — Civil — STATE OF CALIFORNIA

DATE SIGNED:

TULE RIVER INTERTIE PROJECT
LOWER TULE RIVER IRRIGATION DISTRICT
TULARE COUNTY, CA

CASA BLANCA NORTH CONNECTION 3

PROVOST & PRITCHARD ENGINEERING GROUP, INC.
ESTD. 1968
An Employee Owned Company
130 NORTH GARDEN ST.
VISALIA, CALIFORNIA 93291-6362
559/636-1166 FAX 559/636-1177
www.ppeng.com

DESIGN ENGINEER: DENNIS MILLS	
LICENSE NO: CE 67,478	
DRAFTED BY: JAB	CHECKED BY: DRM
SCALE: AS SHOWN	
DATE: 9/22/09	
JOB NO: 147708V1	
DWG. NO:	
SHEET ST25 OF 63	

10/20/2009 1:43 PM V:\Clients\LTRID - 1477\147707V1-Tule Intertie\dwg\SHEET\20160501-DT-13-CASA-BLANCA-NORTH 3.dwg -Mike A. Porter

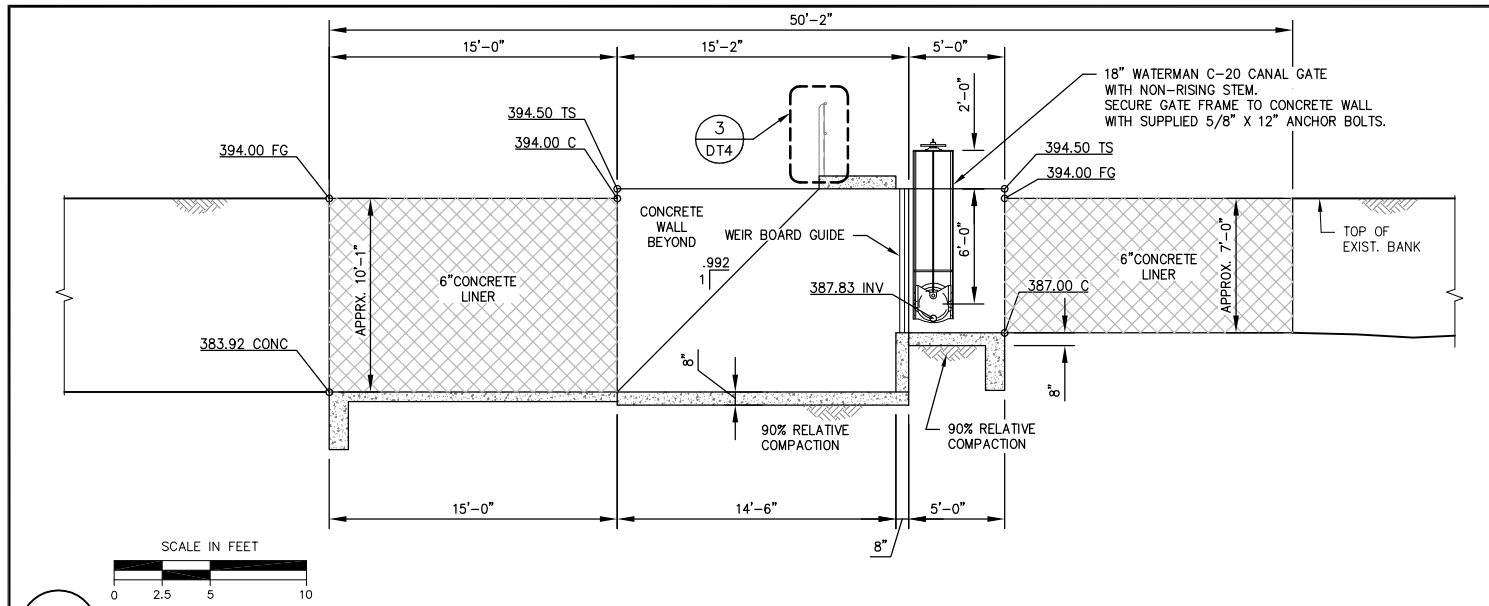

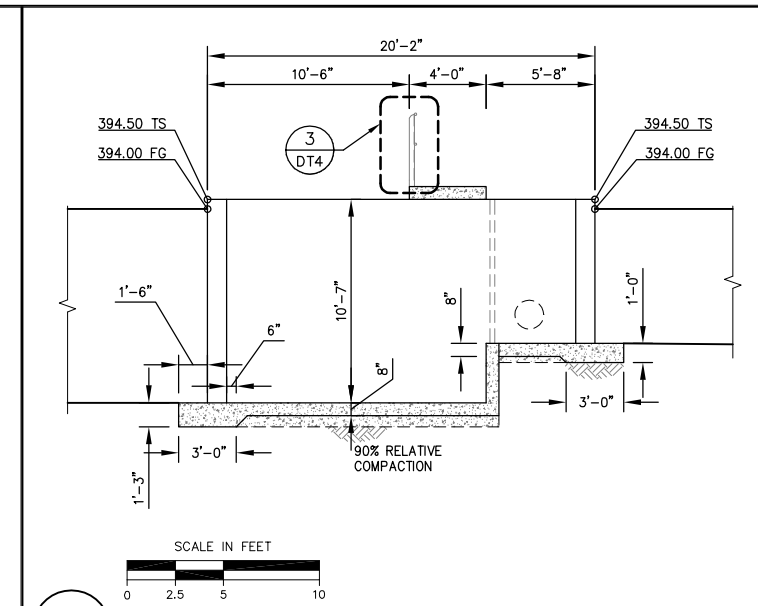

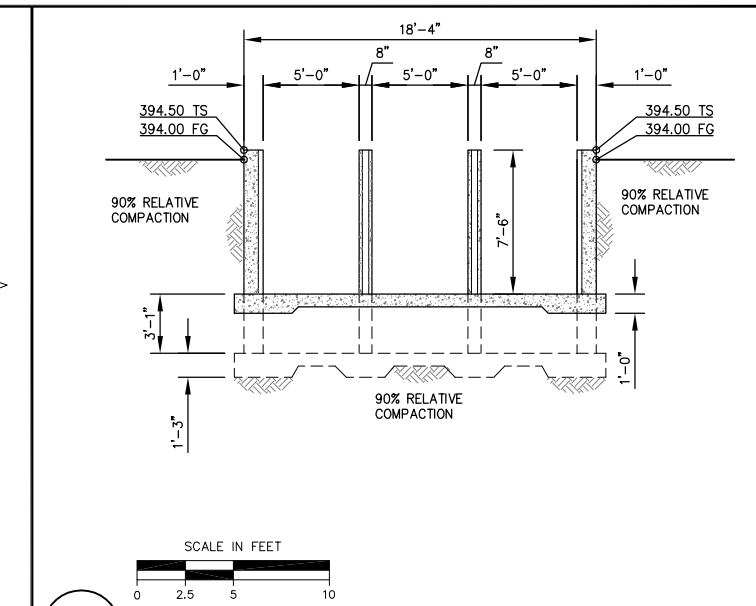

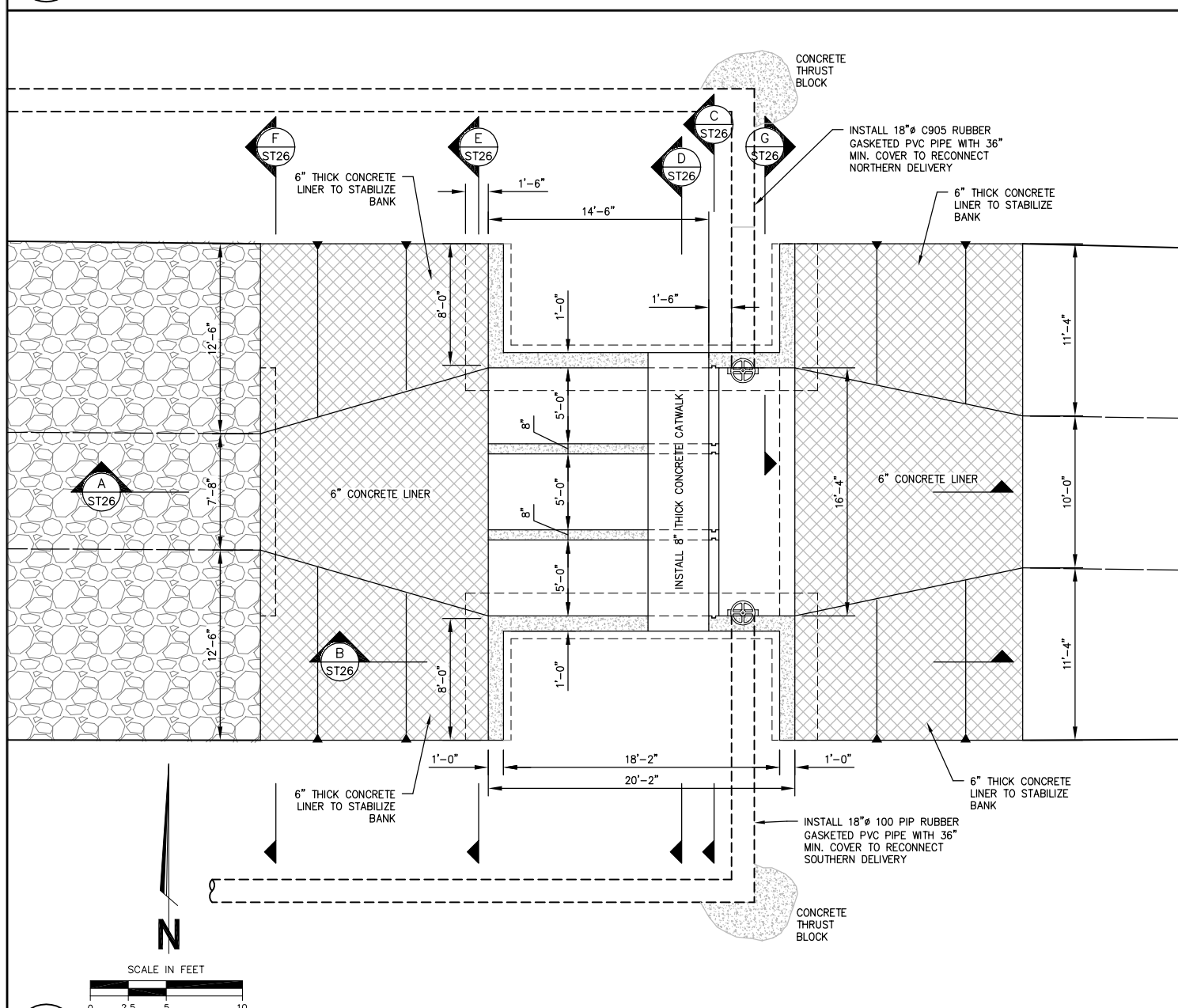

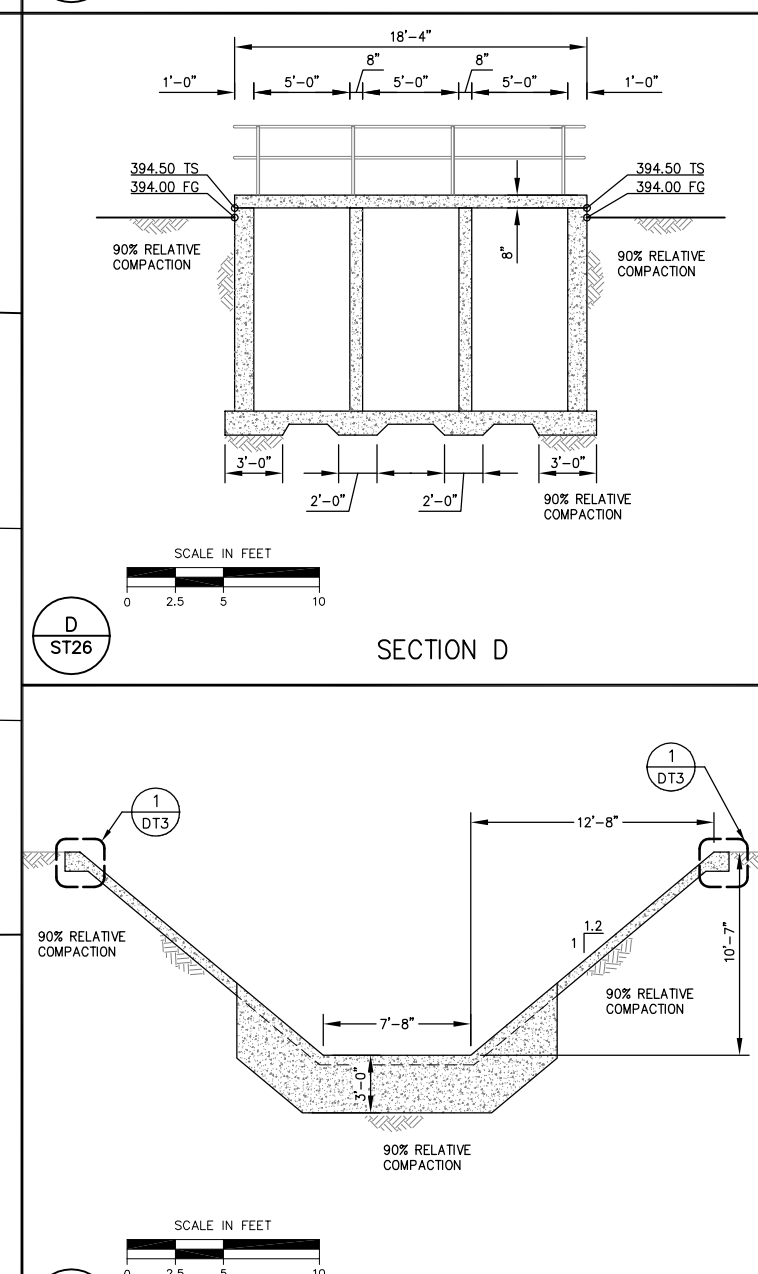

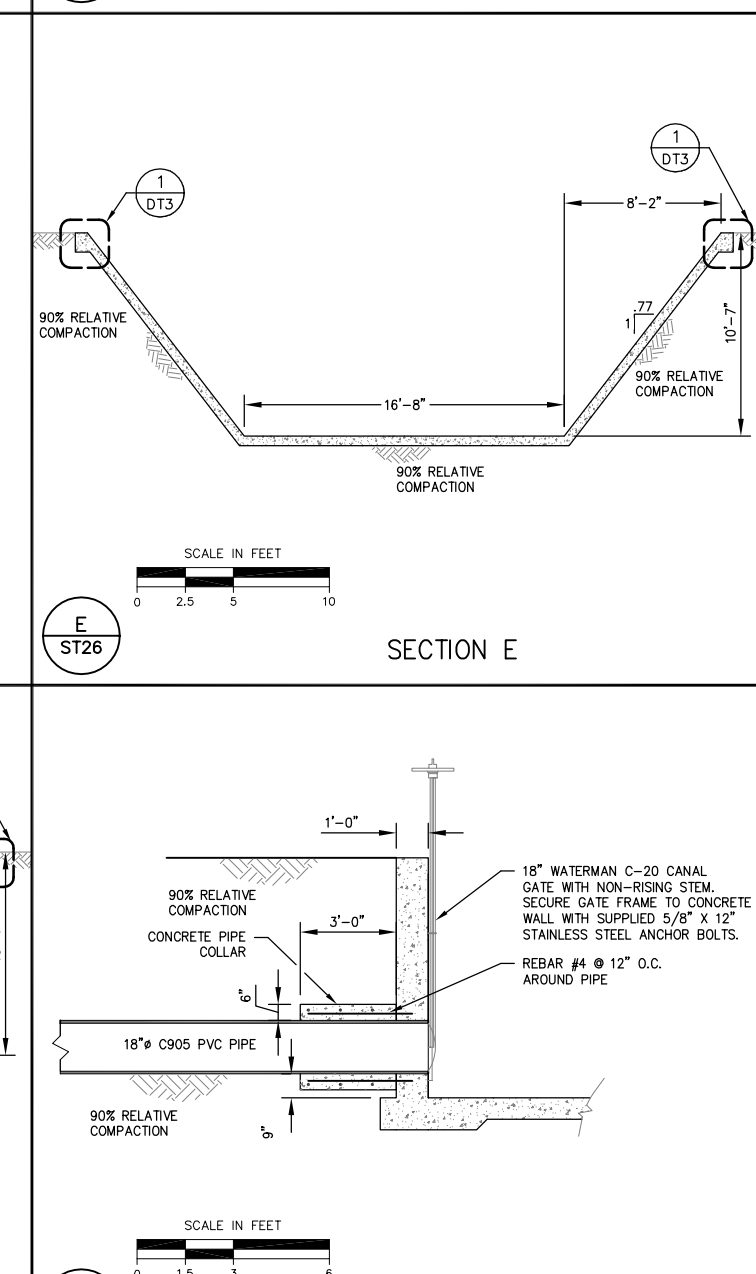

COPYRIGHT 2008 by PROVOST & PRITCHARD
ALL RIGHTS RESERVED
The firm of Provost & Pritchard Engineering Group, Inc. expressly reserves its common law copyright and other property rights in these plans. These plans are not to be reproduced, changed, or copied in any form or manner whatsoever, nor are they to be assigned to any third party without first obtaining the written permission and consent of Provost & Pritchard Engineering Group, Inc. In the event of unauthorized reuse of these plans by a third party, the third party shall hold the firm of Provost & Pritchard Engineering Group, Inc. harmless, and shall defend and indemnify the firm of Provost & Pritchard Engineering Group, Inc.'s legal fees associated with defending and enforcing these rights.

No.	REVISION	BY	DATE

REGISTERED PROFESSIONAL ENGINEER
DENNIS R. MILLS
No. 67478
EXPIRES: 6/30/11
Civil
STATE OF CALIFORNIA

DATE SIGNED:

TULE RIVER INTERTIE PROJECT
LOWER TULE RIVER IRRIGATION DISTRICT
TULARE COUNTY, CA

CASA BLANCA EAST CONNECTION 1

EST. 1943
PROVOST & PRITCHARD
ENGINEERING GROUP
An Employee Owned Company
130 NORTH GARDEN ST.
VISALIA, CALIFORNIA 93291-6362
559/636-1166 FAX 559/636-1177
www.ppeng.com

DESIGN ENGINEER: DENNIS MILLS	
LICENSE NO: CE 67,478	
DRAFTED BY: JAB	CHECKED BY: DRM
SCALE: AS SHOWN	
DATE: 9/22/09	
JOB NO: 147708V1	
DWG. NO:	
SHEET ST26 OF 63	

10/20/2009 1:43 PM V:\Clients\LTRID - 1477\147707V1-Tule Intertie\dwg\SHEET\20160501-DT-13-CASA-BLANCA-EAST 1.dwg -Mike A. Porter