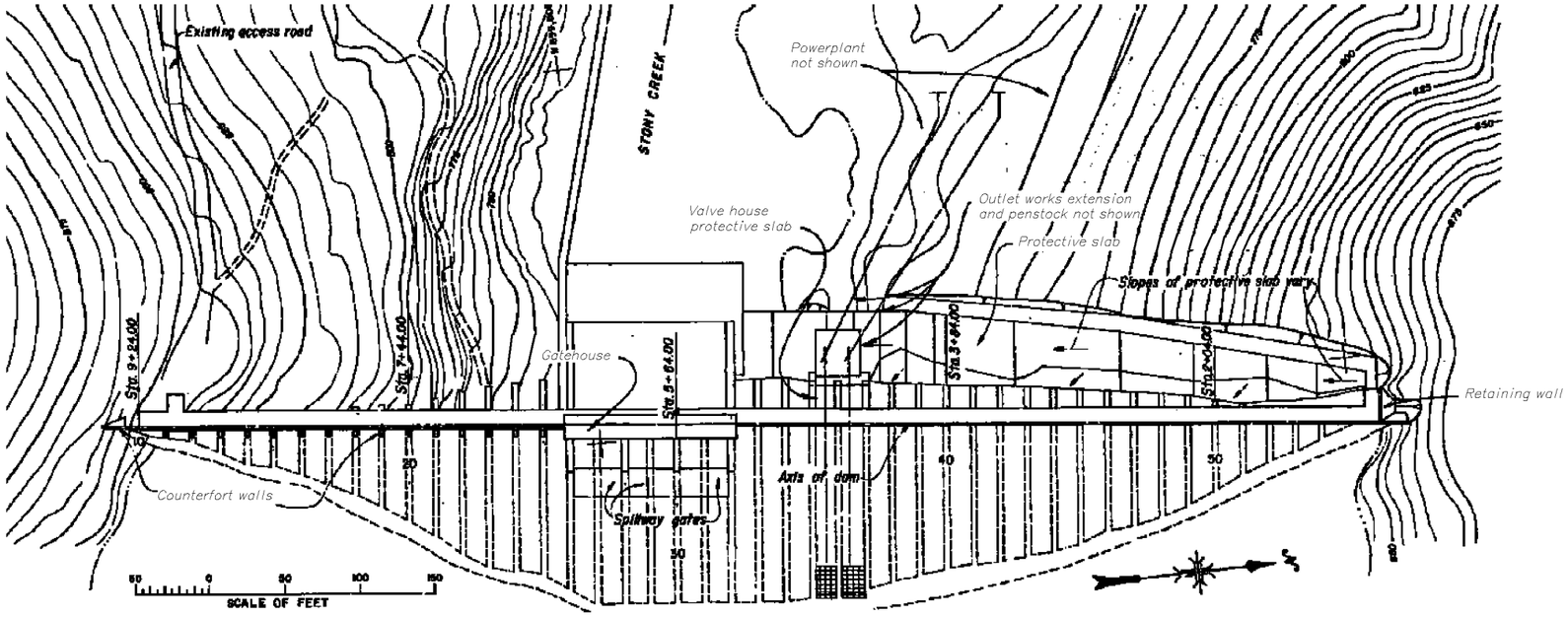

PLAN

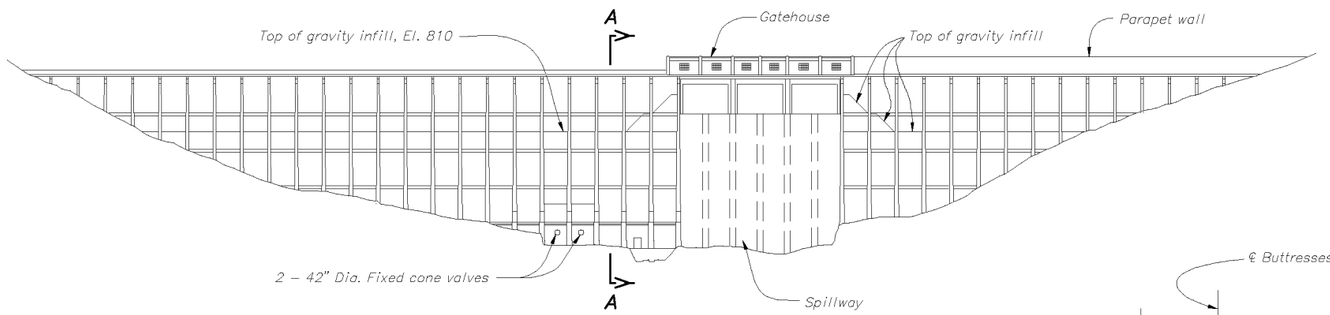

DOWNSTREAM ELEVATION

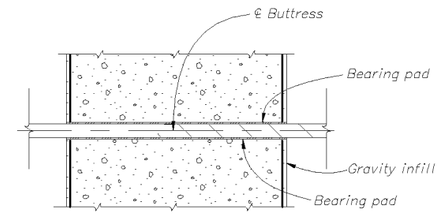

DETAIL 1

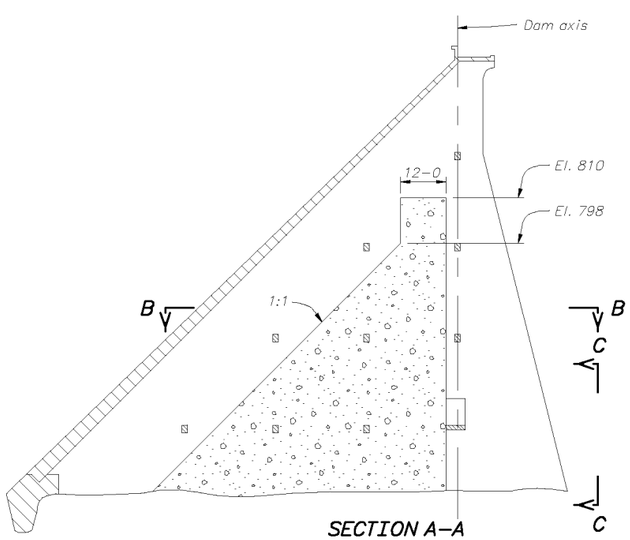

SECTION A–A

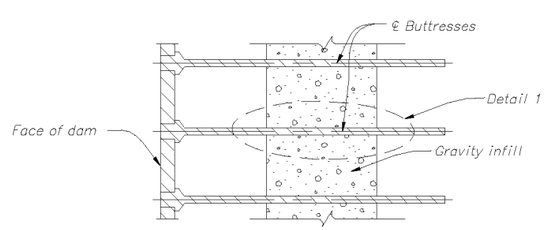

SECTION B–B

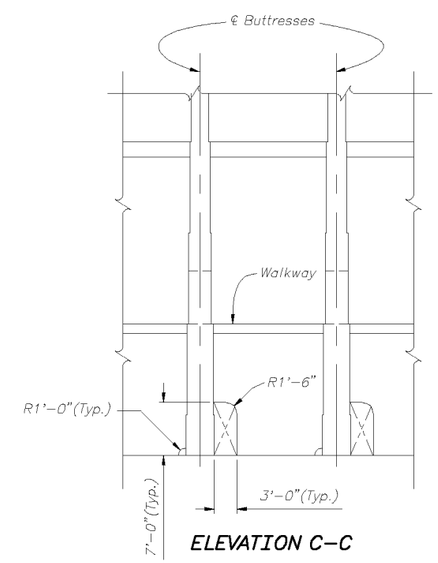

ELEVATION C–C

ALWAYS THINK SAFETY

UNITED STATES
DEPARTMENT OF THE INTERIOR
BUREAU OF RECLAMATION

ORLAND PROJECT, CALIFORNIA

STONY GORGE DAM

CORRECTIVE ACTION – ALTERNATIVE 3

PLAN, ELEVATION, SECTIONS AND DETAILS

DESIGNED _____ CHECKED _____

DRAWN _____ TECH. APPR. _____

APPROVED _____ PEER REVIEWER (TITLE)

CADD SYSTEM AutoCAD Rel. 15.06 | CADD FILENAME VER 2 PLAN AND EL.DWG

DENVER, COLORADO | DATE | SHEET 1 OF 1

ALTERNATIVE 3

FILE PATH: H:\Home\CivilEng Share\PROJ\Stony Gorge\
PLOTTED BY: JMARKLEY
JULY 17, 2003 12:31