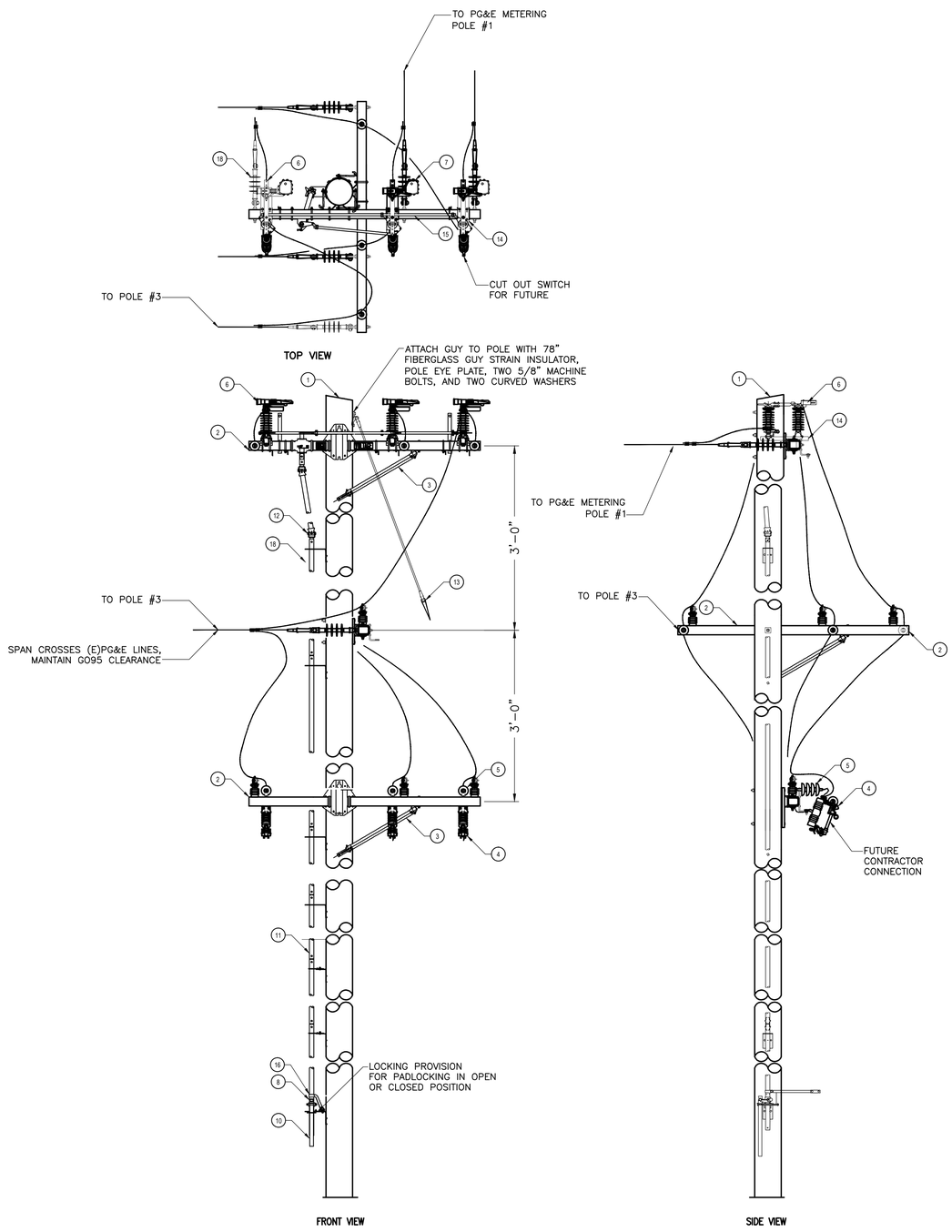

1 POLE 2 DETAILS
SCALE: NONE

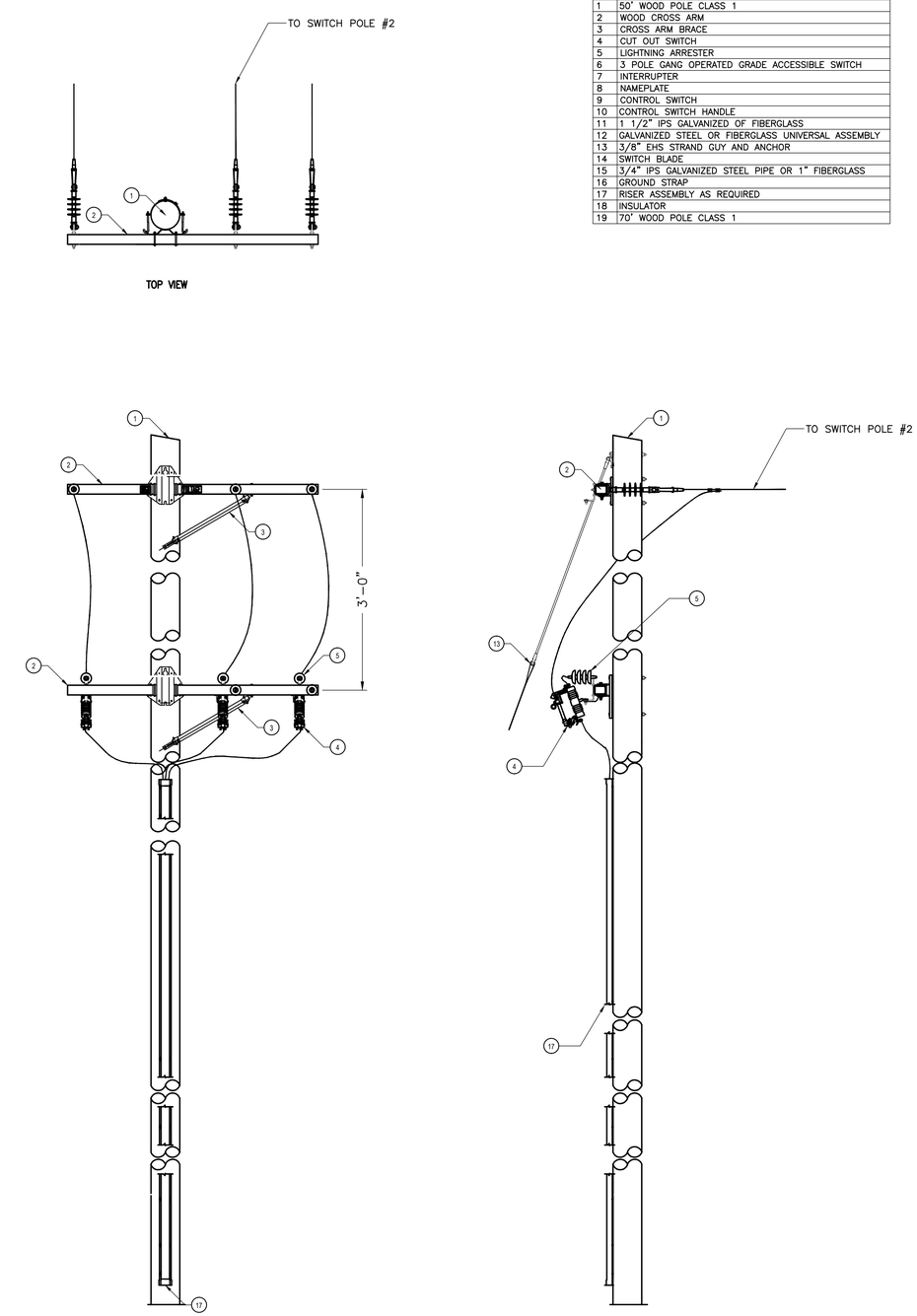

2 POLE 3 DETAILS
SCALE: NONE

ITEM	DESCRIPTION
1	50' WOOD POLE CLASS 1
2	WOOD CROSS ARM
3	CROSS ARM BRACE
4	CUT OUT SWITCH
5	LIGHTNING ARRESTER
6	3 POLE GANG OPERATED GRADE ACCESSIBLE SWITCH
7	INTERRUPTER
8	NAMEPLATE
9	CONTROL SWITCH
10	CONTROL SWITCH HANDLE
11	1 1/2" IPS GALVANIZED OF FIBERGLASS
12	GALVANIZED STEEL OR FIBERGLASS UNIVERSAL ASSEMBLY
13	3/8" EHS STRAND GUY AND ANCHOR
14	SWITCH BLADE
15	3/4" IPS GALVANIZED STEEL PIPE OR 1" FIBERGLASS
16	GROUND STRAP
17	RISER ASSEMBLY AS REQUIRED
18	INSULATOR
19	70' WOOD POLE CLASS 1

REV.	REVISION	DATE	NAME
1	ISSUED FOR REVIEW	01/20/10	RR
0	ISSUED FOR PERMIT	02/16/10	RR

	NAME	DATE
DRAWN:	AH	12/22/09
DESIGNED:	RR	12/22/09
CHECKED:	RR	
APPROVED:		

CONTRA COSTA WATER DISTRICT
CONCORD, CALIFORNIA

REGISTERED PROFESSIONAL ENGINEER
RAY G. ROBERTSON
2/16/10
No. E015827
Expires:12-31-2010
ELECTRICAL
STATE OF CALIFORNIA

Contra Costa Electric
An EMCOR Company
825 Howe Road, Martinez, CA 94553
Ph: (925) 229-4250 Fax: (925) 228-3265
Cont. Lic. #135885 www.coelectric.com

SCALE: AS SHOWN
FILE NAME: 22461-E6.02
JOB NUMBER: 22461

LINE IS 2 INCHES AT FULL SIZE (IF NOT 2"-SCALE ACCORDINGLY)

PROJECT TITLE: FISH SCREEN STRUCTURE PHASE 2
LEVEES AND COFFERDAMS
CONTRA COSTA CANAL CVPIA, CA

DRAWING TITLE: POLE DETAILS

SHT. 8 REV. 0
DWG. NUMBER 22461-6.02

DOLPBIGO Feb 16, 2010 2:39pm U:\JOBS\UTILITY\ACTIVE\2009\22461 91200286 RAIN FOR RENT\Drawing\22461-E6.02.dwg