Winterwood Substation
Sunrise Generating Plant and Substation
Sunrise Mountain Instant Study Area
E SAHARA AVE
S HOLLYWOOD BLVD
New Build
Rainbow Gardens ACEC
E DESERT INN RD
Rebuild Las Vegas #1 69kV Transmission Line
FLAMINGO RD
582
Lake Las Vegas
Lake Mead National Recreation Area
E TROPICANA AVE
LAKE LAS VEGAS PARKWAY
146
E RUSSELL RD
New Build
Clark Generating Plant and Substation
PABCO RD
Rebuild Las Vegas #3 69kV Transmission Line
36 31
1 6
36
1
E SUNSET RD
Boulder Highway
River Mountains ACEC
W SUNSET RD
W WARM SPRINGS RD
Lake Mead Parkway
E WARM SPRINGS RD
New Build
HENDERSON
RACETRACK RD
515
93
95
582
Equestrian Substation

Legend

Transmission Lines

- Rebuild / New Build Transition Point
- Existing 138kV Transmission Line
- Proposed 230/138kV Quad Circuit
- Proposed 500kV Double Circuit Alternatives
- Harry Allen - Mead 500kV Transmission Line
- USDI Bureau of Land Management
- USDI Bureau of Reclamation
- BLM Utility Corridor
- Wetlands Park Boundary
- River Mountains ACEC
- BLM Sunrise Management Area/ Sunrise Mountain Special Recreation Management Area/ Rainbow Gardens ACEC
- National Park Service
- Henderson Municipal Boundary

0 0.5 1 1.5 Miles

1:70,000

POWER ENGINEERS

Nevada Power.

SUNRISE TAP TRANSMISSION LINE PROJECT

FIGURE 1.1-1

Project Area Map

Oregon
Idaho
Nevada
Utah
Project Study Area
California
Arizona

Wednesday, August 6, 2008 4:57:40 PM
W:\NevadaPower\Apps\SRT\EA_FIG_REVISIONS_080508\EA FIG1-1-1_Project_Area_Map_080608_ 11x17.mxd

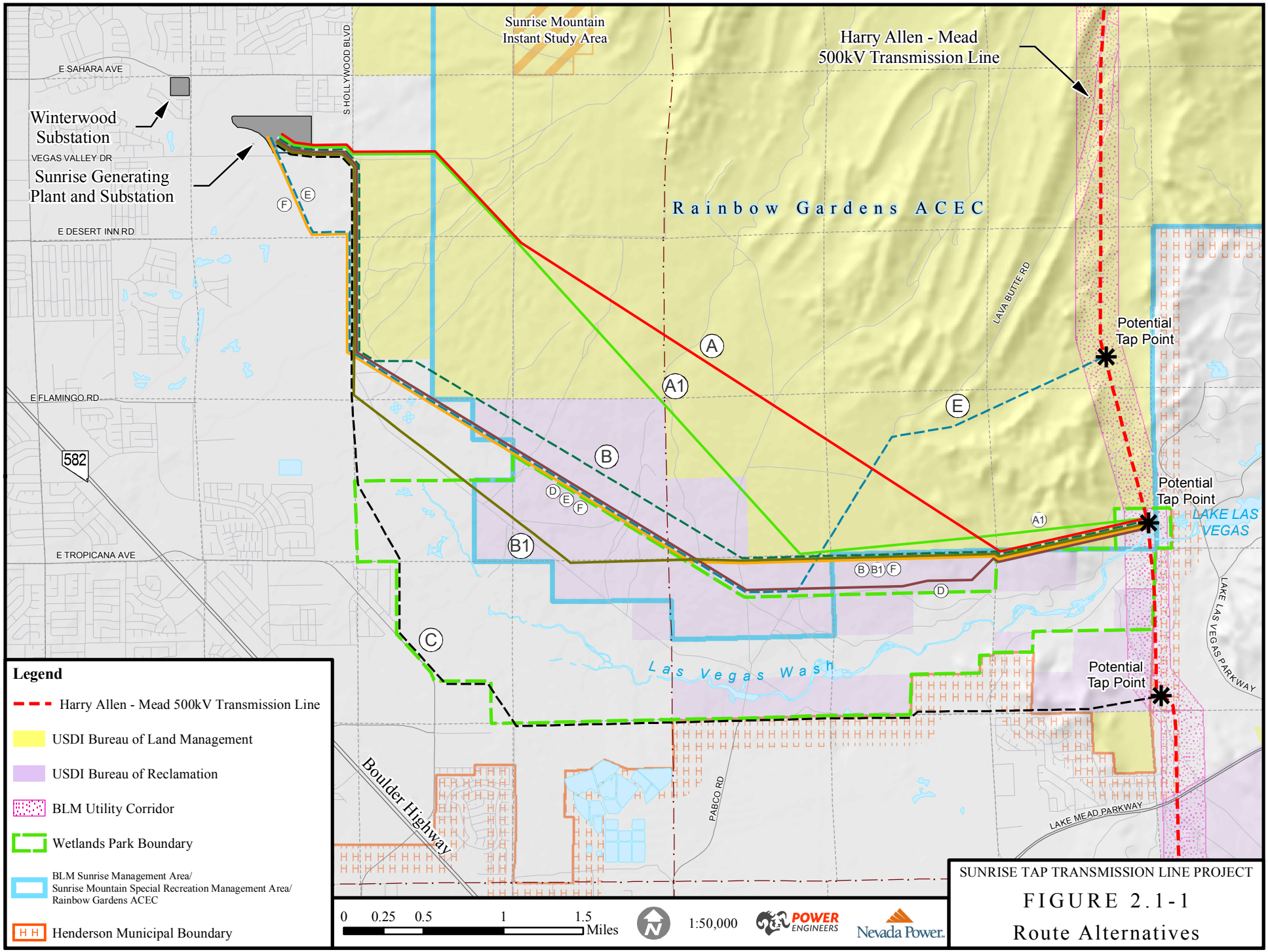

SUNRISE TAP TRANSMISSION LINE PROJECT

FIGURE 2.1-1

Route Alternatives

Thursday, August 7, 2008 9:41:00 AM
W:\NevadaPower\Apps\SRT\EA_FIG_REVISIONS_080508\Fig2-1-1_Route_Alternatives_080708.mxd

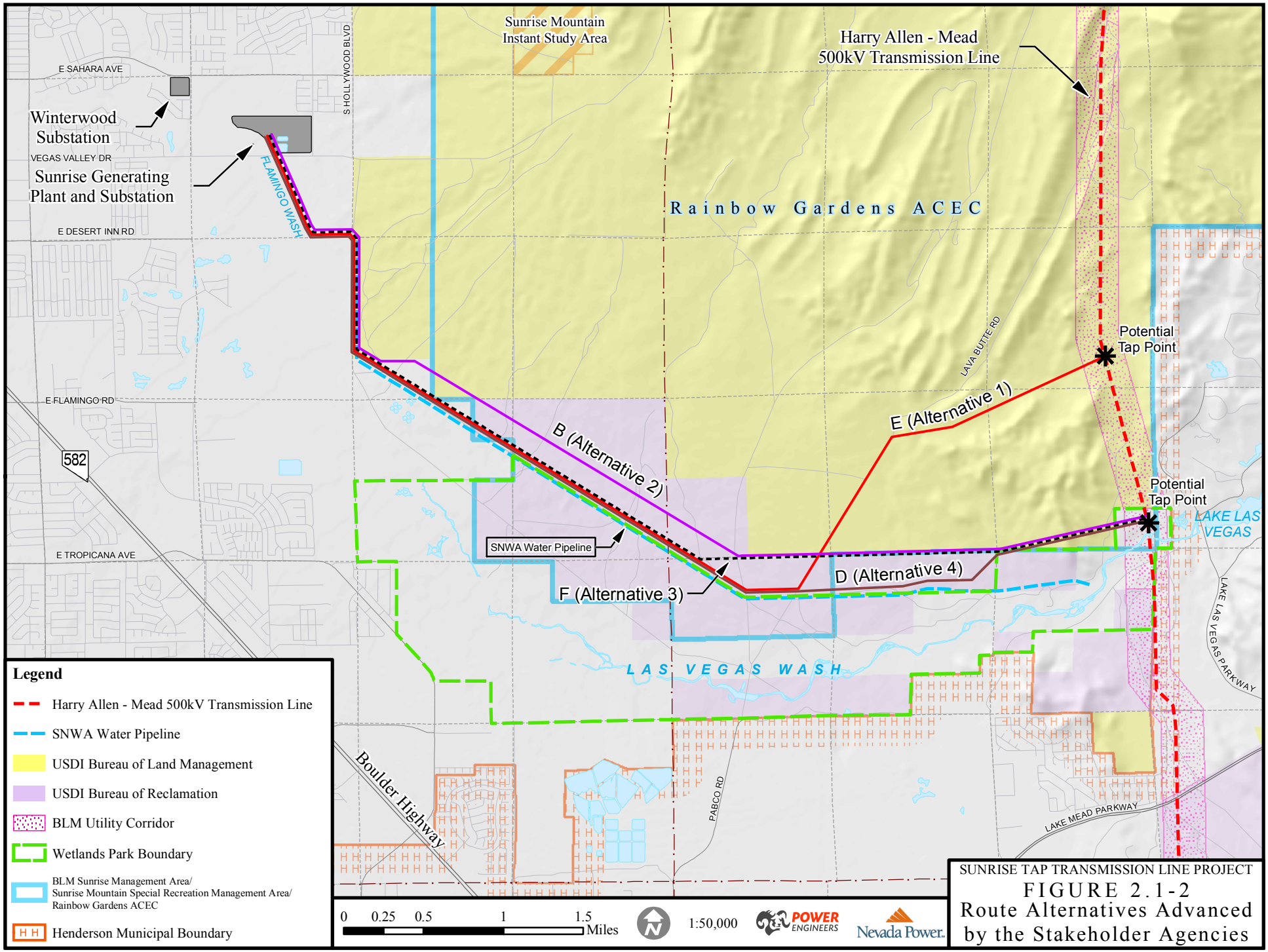

SUNRISE TAP TRANSMISSION LINE PROJECT

FIGURE 2.1-2

Route Alternatives Advanced by the Stakeholder Agencies

Thursday, August 7, 2008 9:46:46 AM
W:\NevadaPower\Apps\SRT\EA_FIG_REVISIONS_080508\Fig2-1-2_Routes_Advanced_080708.mxd

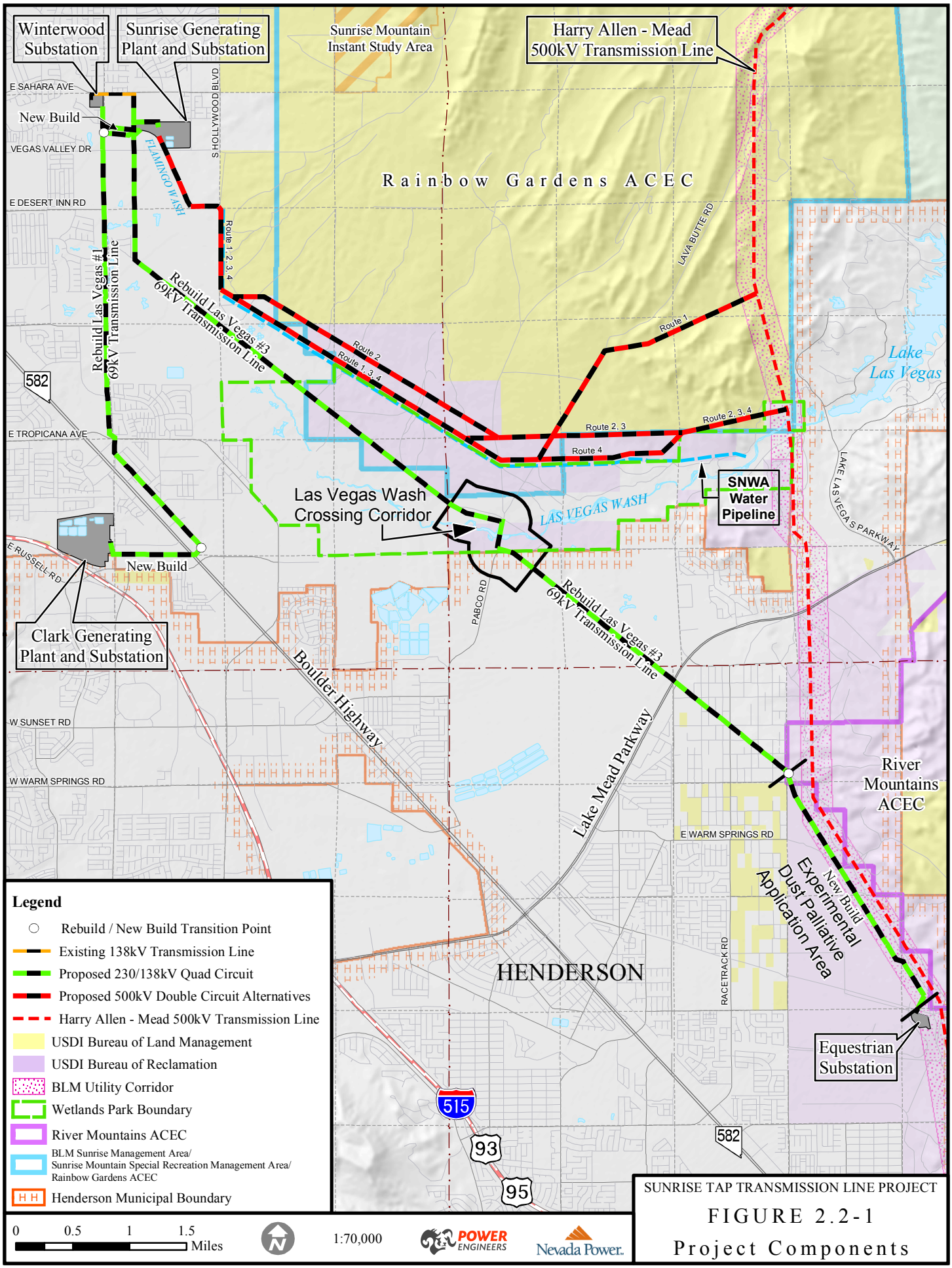

Thursday, August 7, 2008 9:51:36 AM
W:\NevadaPower\Apps\SRT\EA_FIG_REVISIONS_080508\Fig2-2-1_Project_Components_080708.mxd

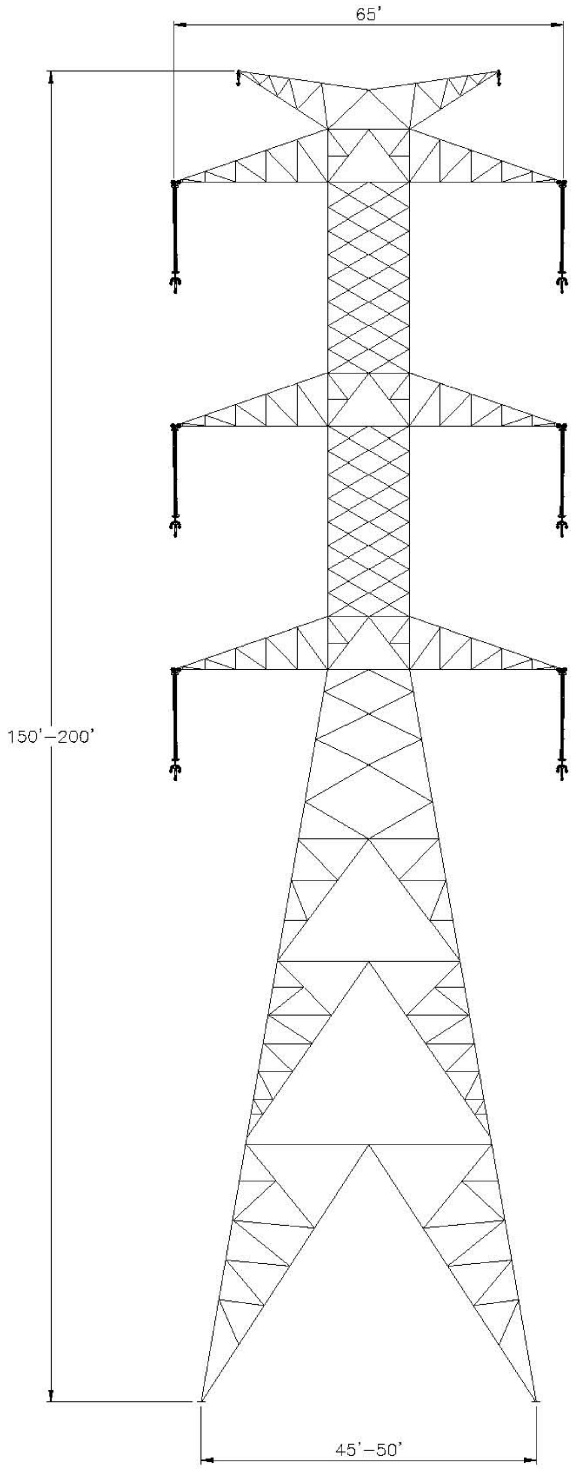

APPROVAL		
	BY	DATE
DRAWN	RLG	04/20/06
DESIGNED	SRP	04/20/06
CHECKED		
APPROVED		

Nevada Power.
TRANSMISSION ENGINEERING STANDARDS

SUNRISE TAP TRANSMISSION LINE PROJECT

FIGURE 2.4-1

Typical Double Circuit 500kV Lattice Structure

SHEET:

0

PLOT DATE/TIME: 4/21/2006 12:16 PM PLOTTED BY: GARDNER, RUSS

U:\NPC\TD\VOL1\TRANSCOM\PROJECTS\CENTENNIAL\HAMD\CTO\6 FRAMING DETAILS\LATTICE EXAMPLES\TYPNPC-DC500KV LATTICE TOWER.DWG

Thursday, August 7, 2008 9:37:30 AM
W:\NevadaPower\Apps\SRT\EA_FIG_REVISIONS_080508\Fig2-4-1_500KV_Lattice_080708.mxd

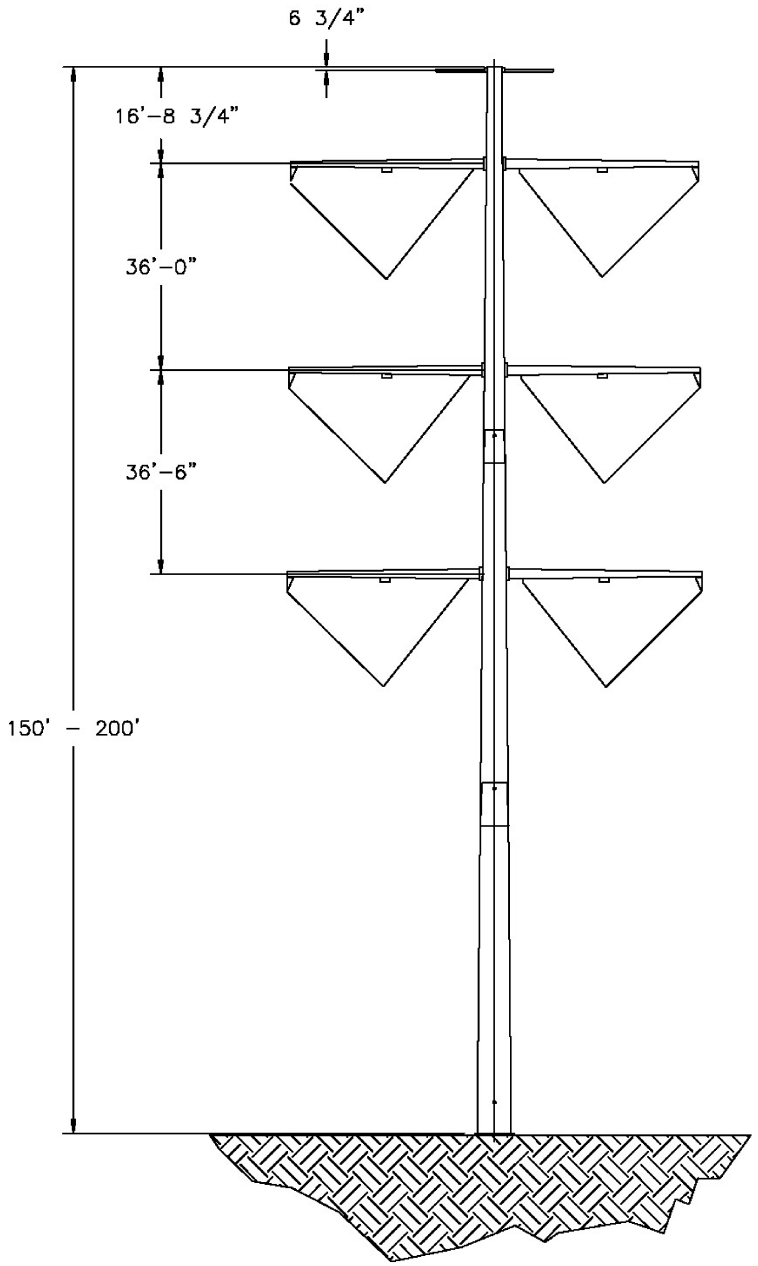

APPROVAL		
	BY	DATE
DRAWN	RLG	06/22/06
DESIGNED	SRP	06/22/06
CHECKED		
APPROVED		

Nevada Power.
TRANSMISSION ENGINEERING STANDARDS

SUNRISE TAP TRANSMISSION LINE PROJECT

FIGURE 2.4-2

Typical Double Circuit 500kV Single Pole Structure

SHEET: 0

U:\NPC\TD\VOL1\TRANSCOM\PROJECTS\CENTENNIAL\HAMD\CTD\6 FRAMING DETAILS\LATTICE EXAMPLES\TYPNPC-DC500KV TUBULARSTR.DWG

PLOT DATE/TIME: 9/28/2006 8:58 AM PLOTTED BY: PAYNE, STEVEN

Thursday, August 7, 2008 9:24:21 AM
W:\NevadaPower\Apps\SRT\EA_FIG_REVISIONS_080508\Fig2-4-2_500kV_Tube_080708.mxd

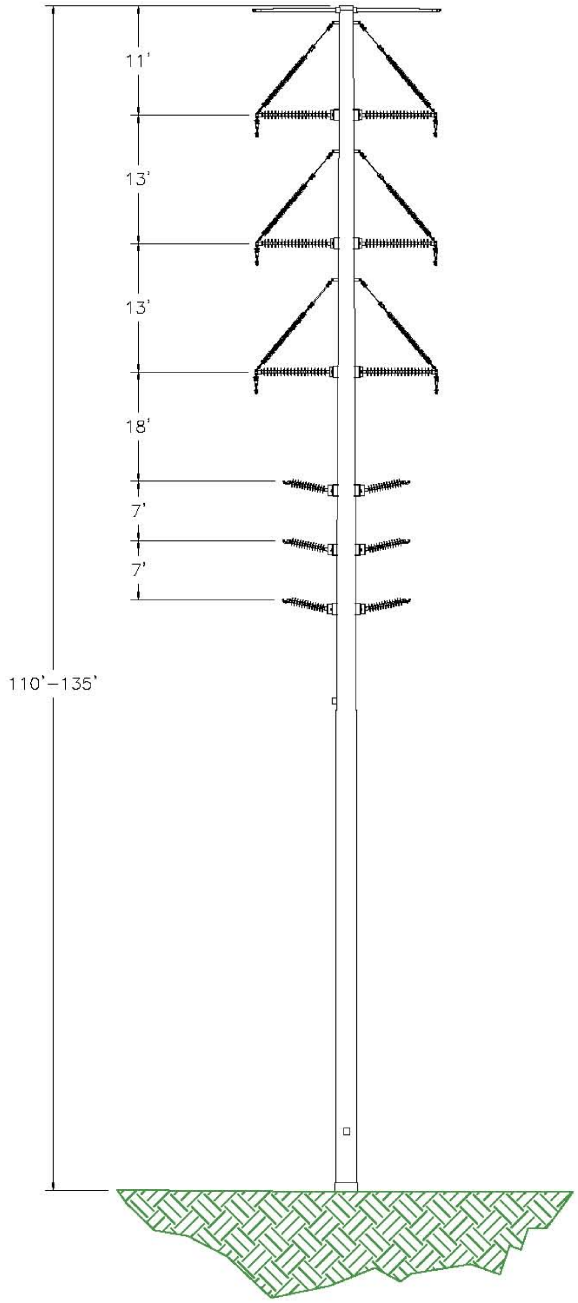

APPROVAL		
	BY	DATE
DRAWN	RLG	04/20/06
DESIGNED	SRP	04/20/06
CHECKED		
APPROVED		

Nevada Power.
TRANSMISSION ENGINEERING STANDARDS

SUNRISE TAP TRANSMISSION LINE PROJECT

FIGURE 2.4-3

Typical Quad-Circuit 230kV Single Pole Structure

SHEET:

0

PLOT DATE/TIME: 4/21/2006 12:13 PM PLOTTED BY: GARDNER, RUSS

U:\NPC\TD\VOL1\TRANSCOM\PROJECTS\CENTENNIAL\HAMD\CTO\6 FRAMING DETAILS\LATTICE EXAMPLES\TYPNPC-DC230KV-138KVQUAD.DWG

Wednesday, August 6, 2008 4:55:10 PM
W:\NevadaPower\Apps\SRT\EA_FIG_REVISIONS_080508\Fig2-4-3_230KV_Tube_080608.mxd