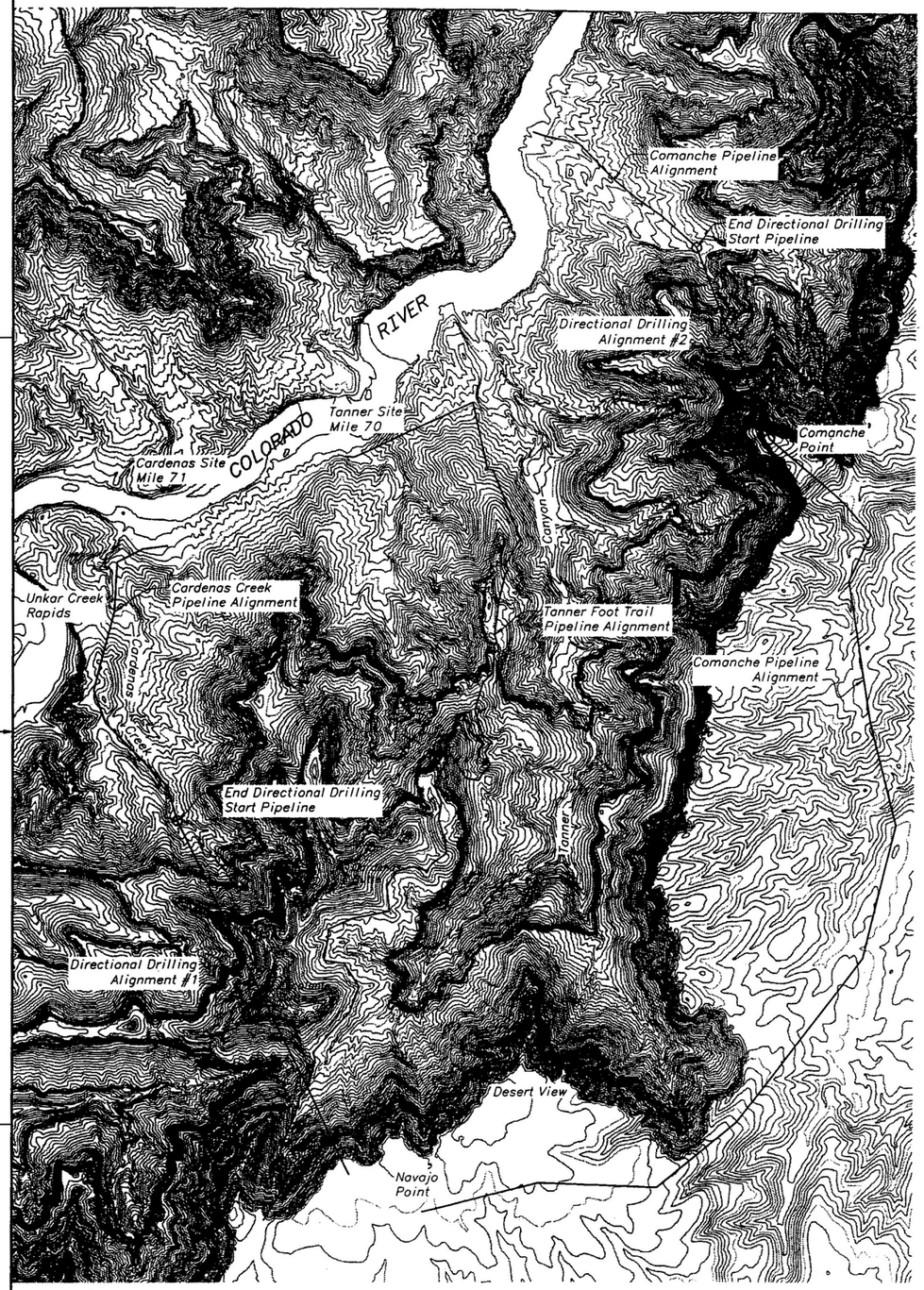

PLAN

2000 0 2000 4000 6000
SCALE OF FEET

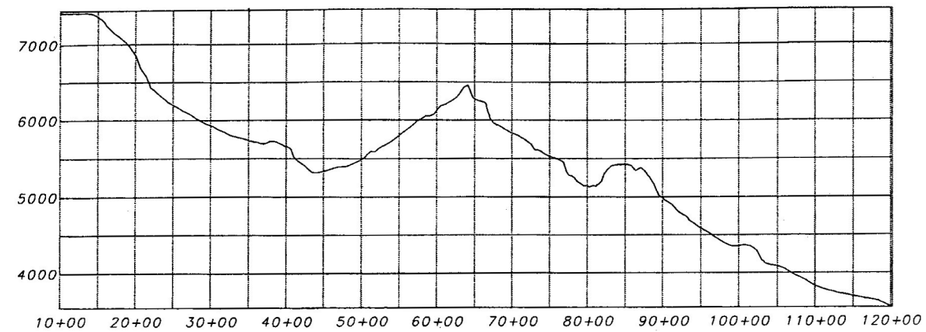

PROFILE
DIRECTIONAL DRILLING ALIGNMENT #1

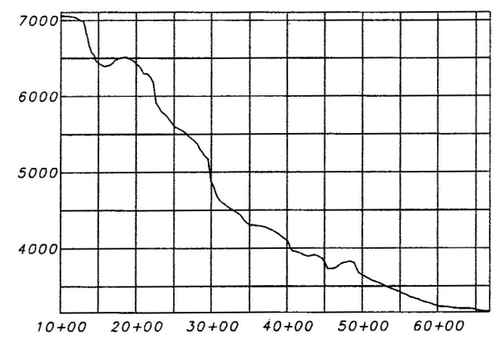

PROFILE
DIRECTIONAL DRILLING ALIGNMENT #2

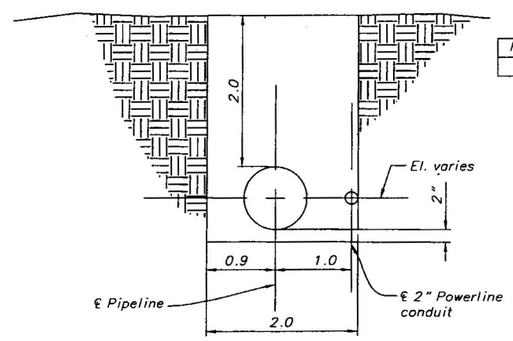

PIPE TRENCH SECTION
(TYPICAL)

PIPE SIZE	EXCAVATION	BACKFILL	SELECT MATERIAL
8" Dia.	0.216 C.Y./ft.	0.124 C.Y./ft.	0.076 C.Y./ft.

ALWAYS THINK SAFETY

UNITED STATES
DEPARTMENT OF THE INTERIOR
BUREAU OF RECLAMATION
GRAND CANYON NATIONAL PARK – ARIZONA

PIPELINE

PIPELINE AND DIRECTIONAL DRILL ALIGNMENTS
TANNER (6A), CARDENAS (6B), AND
COMANCHE (6C) ALTERNATIVES
PLAN AND PROFILES

DRAWING 4 – 1

CADD SYSTEM	CADD FILENAME	DATE AND TIME PLOTTED
AutoCAD Rel. 15.0b	OSRTVM.DWG	APRIL 27, 2001 13:42
DENVER, COLORADO	APRIL 23, 2001	

SHEET 1 OF 2

FILE PATH: D:\Projects\GrndCyn\LDDGrnCyn\dwg\